SECTION DI
DRIVER INFORMATION SYSTEM

CONTENTS

PRECAUTION

PFP:00011

Precautions for Supplemental Restraint System (SRS) “AIR BAG” and “SEAT BELT PRE-TENSIONER”

AKS004FR

The Supplemental Restraint System such as “AIR BAG” and “SEAT BELT PRE-TENSIONER”, used along with a front seat belt, helps to reduce the risk or severity of injury to the driver and front passenger for certain types of collision. This system includes seat belt switch inputs and dual stage front air bag modules. The SRS system uses the seat belt switches to determine the front air bag deployment, and may only deploy one front air bag, depending on the severity of a collision and whether the front occupants are belted or unbelted.
Information necessary to service the system safely is included in the SRS and SB section of this Service Manual.

WARNING:

- **To avoid rendering the SRS inoperative, which could increase the risk of personal injury or death in the event of a collision which would result in air bag inflation, all maintenance must be performed by an authorized NISSAN/INFINITI dealer.**
- **Improper maintenance, including incorrect removal and installation of the SRS, can lead to personal injury caused by unintentional activation of the system. For removal of Spiral Cable and Air Bag Module, see the SRS section.**
- **Do not use electrical test equipment on any circuit related to the SRS unless instructed to in this Service Manual. SRS wiring harnesses can be identified by yellow and/or orange harnesses or harness connectors.**

Wiring Diagrams and Trouble Diagnosis

AKS004FT

When you read wiring diagrams, refer to the following:

- Refer to GI-14, "How to Read Wiring Diagrams" .
- Refer to PG-3, "POWER SUPPLY ROUTING CIRCUIT" for power distribution circuit.

When you perform trouble diagnosis, refer to the following:

- Refer to GI-10, "HOW TO FOLLOW TEST GROUPS IN TROUBLE DIAGNOSES" .
- Refer to GI-26, "How to Perform Efficient Diagnosis for an Electrical Incident" .

COMBINATION METERS

PFP:24814

System Description

AKS004FU

UNIFIED METER CONTROL UNIT

- Speedometer, odo/trip meter, tachometer, fuel gauge and water temperature gauge are controlled by the unified meter control unit, which is built into the combination meter. Unified meter control unit receives signals from unified meter and A/C amp.
- Warning lamp and indicator lamp of combination meter are controlled by signals drawn from the unified meter and A/C amp.
- Digital meter is adopted for odo/trip meter.*
  *The record of the odo meter is kept even if the battery cable is disconnected. The record of the trip meter is erased when the battery cable is disconnected.
- Odo/trip meter and CVT indicator segments can be checked in diagnosis mode.
- Meters/gauges can be checked in diagnosis mode.

Illumination Control

The unified meter control unit outputs the odo/trip meter and CVT indicator lighting when the ignition switch is turned on. When the lighting switch is turned on, light on for the combination meter dial, odo/trip meter and illumination control switch and external lighting are output. In addition, when the lighting switch is turned on, the illumination control switch on the left side of the combination meter can be used to adjust the brightness of each light. The brightness can be adjusted to sixteen different levels: From 0 (no lights) to 15 (maximum). Pressing the illumination control switch will brighten or darken the lights. When the key switch is in the START position, the combination meter dial lighting and illumination control switch lighting are turned off.

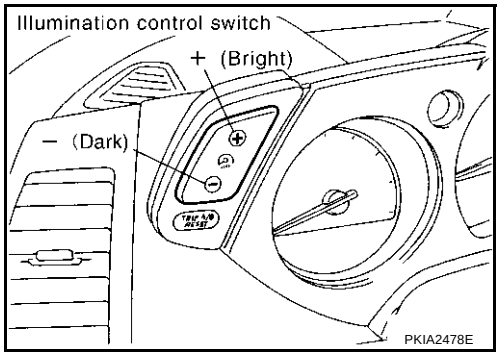

UNIFIED METER AND A/C AMP.

Refer to DI-32, "System Description" in “UNIFIED METER AND A/C AMP”.

HOW TO CHANGE THE DISPLAY FOR ODO/TRIP METER

- The vehicle speed signal and the memory signals from the meter memory circuit are processed by the combination meter and the mileage is displayed.
- Depressing the odo/trip meter switch toggles the mode in the following order.

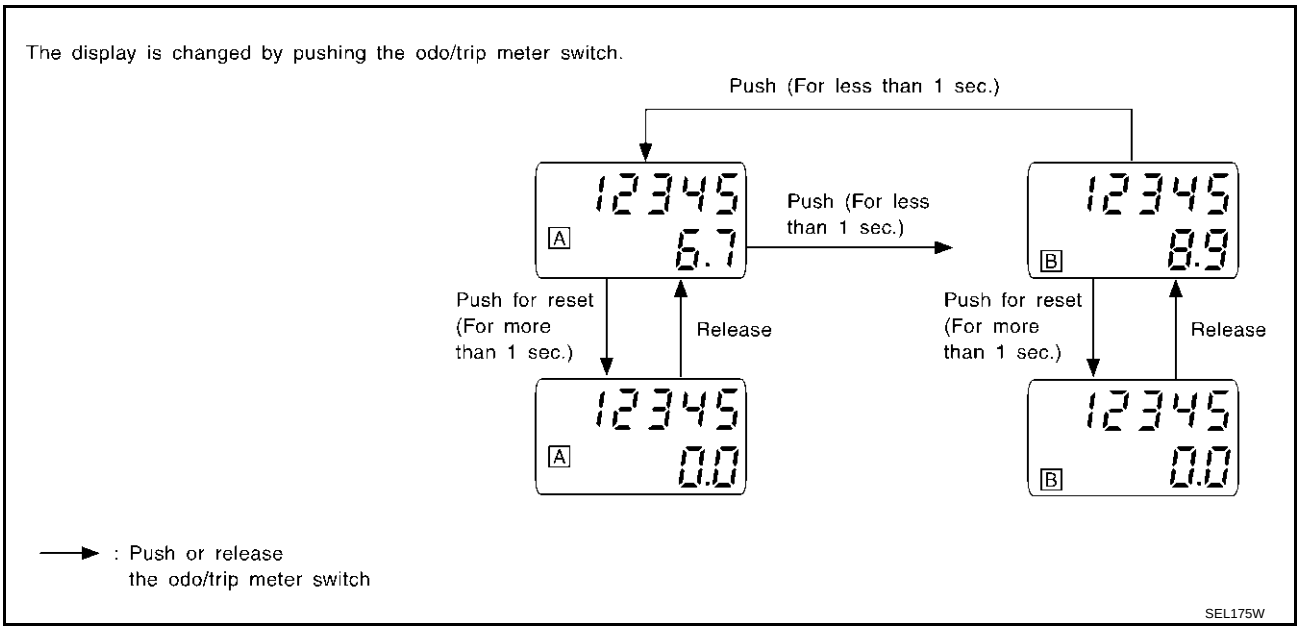

- The odo/trip meter display mode toggling and trip display resetting can be identified by the amount of time that elapses from pressing the odo/trip meter switch to releasing it.
- When resetting with trip A displayed, only trip A display is reset (Trip B operates the same way).

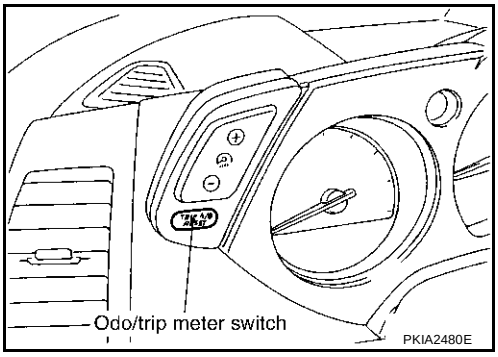

POWER SUPPLY AND GROUND CIRCUIT

Power is supplied at all times

- through 10A fuse [No. 19, located in the fuse block (J/B)]
- to unified meter and A/C amp. terminal 21
- through 10A fuse [No. 21, located in the fuse block (J/B)]
- to combination meter terminal 21.

With the ignition switch in the ON or START position, power is supplied

- through 10A fuse [No. 14, located in the fuse block (J/B)]
- to combination meter terminal 20
- through 10A fuse [No. 12, located in the fuse block (J/B)]
- to unified meter and A/C amp. terminal 22.

With the ignition switch in the ON position, power is supplied

- through 15A fuse [No. 10, located in the fuse block (J/B)], and
- through 15A fuse [No. 11, located in the fuse block (J/B)]
- to unified meter and A/C amp. terminal 46.

Ground is supplied

- to combination meter terminals 22, 23 and 24, and
- to unified meter and A/C amp. terminals 29 and 30
- through body grounds M14 and M78.

WATER TEMPERATURE GAUGE

The water temperature gauge indicates the engine coolant temperature.
ECM provides a engine coolant temperature signal to unified meter and A/C amp. with CAN communication line. Unified meter and A/C amp. provides a water temperature signal to combination meter for water temperature gauge with communication line between unified meter and A/C amp. and combination meter.

TACHOMETER

The tachometer indicates engine speed in revolutions per minute (rpm).
ECM provides an engine speed signal to unified meter and A/C amp. with CAN communication line. Unified meter and A/C amp. provides an engine speed signal to combination meter for tachometer with communication line between unified meter and A/C amp. and combination meter.

FUEL GAUGE

The fuel gauge indicates the approximate fuel level in the fuel tank.
The fuel gauge is regulated by a variable ground signal supplied

- from unified meter and A/C amp. terminal 36
- through the fuel level sensor unit and fuel pump (main) terminals 5 and 7, and
- through the fuel level sensor unit (sub), and
- through the fuel level sensor unit and fuel pump (main) terminals 6 and 2
- to unified meter and A/C amp. terminal 28 for the fuel gauge.

Unified meter and A/C amp. provides an fuel level signal to combination meter for fuel gauge with communication line between unified meter and A/C amp. and combination meter.

SPEEDOMETER

ABS actuator and electric unit (control unit) provides a vehicle speed signal to the unified meter and A/C amp. with CAN communication line. After unified meter and A/C amp. received the vehicle speed signal, it changes the signal to 8 pulse signal and provides the 8 pulse signal to the combination meter for the speedometer.

Component Parts and Harness Connector Location

AKS004FV

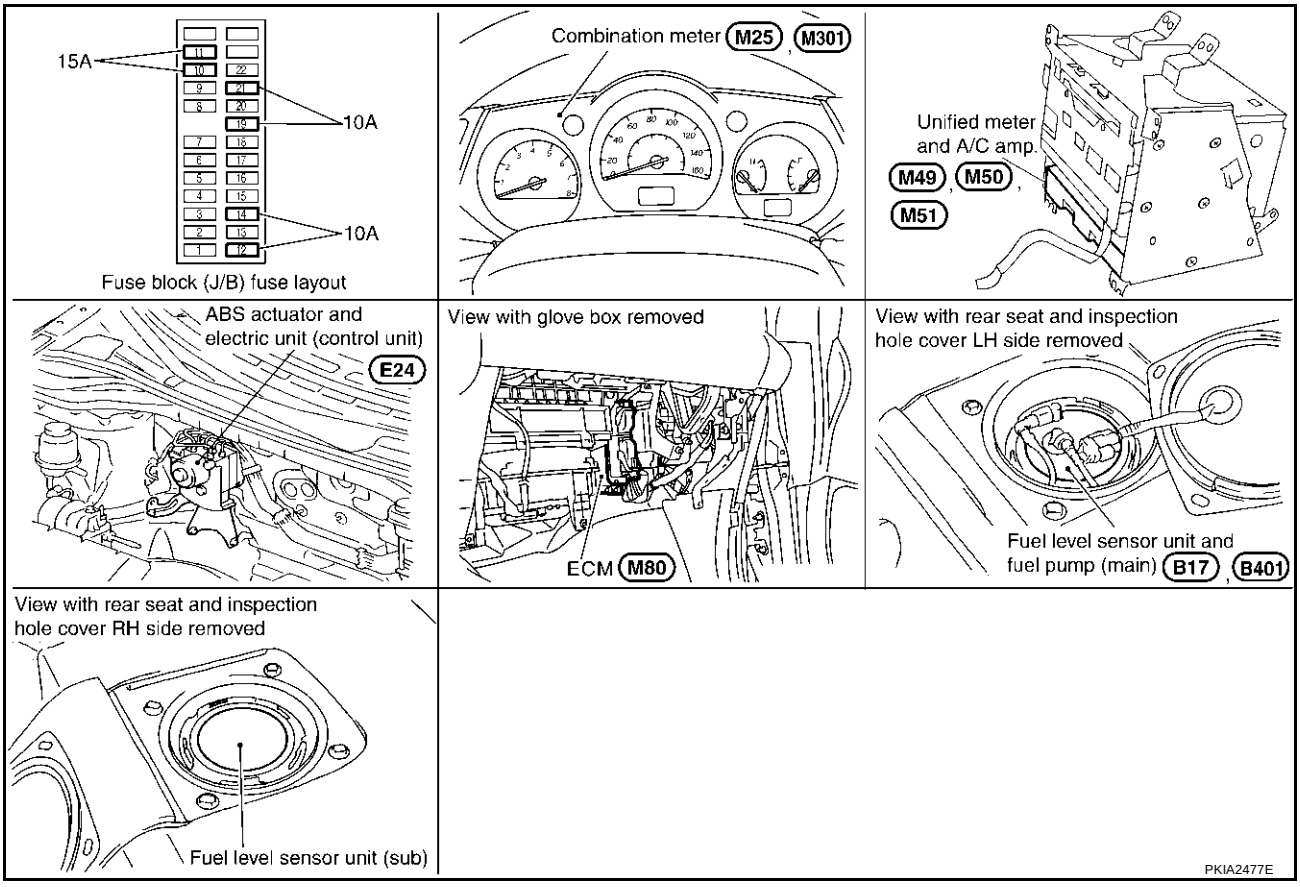

Combination Meter

AKS004FW

CHECK

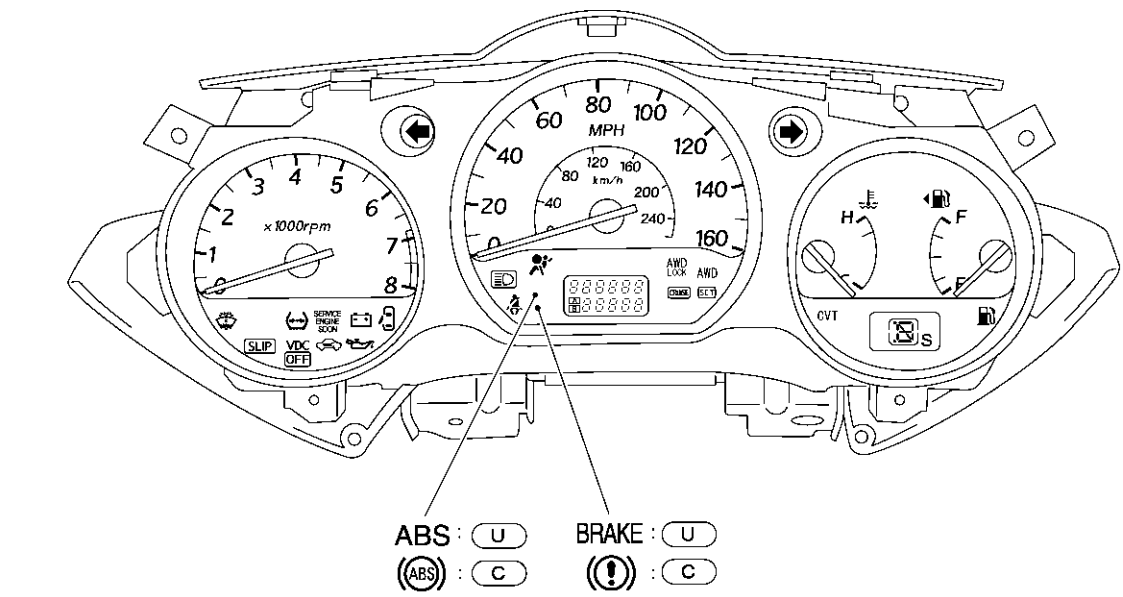

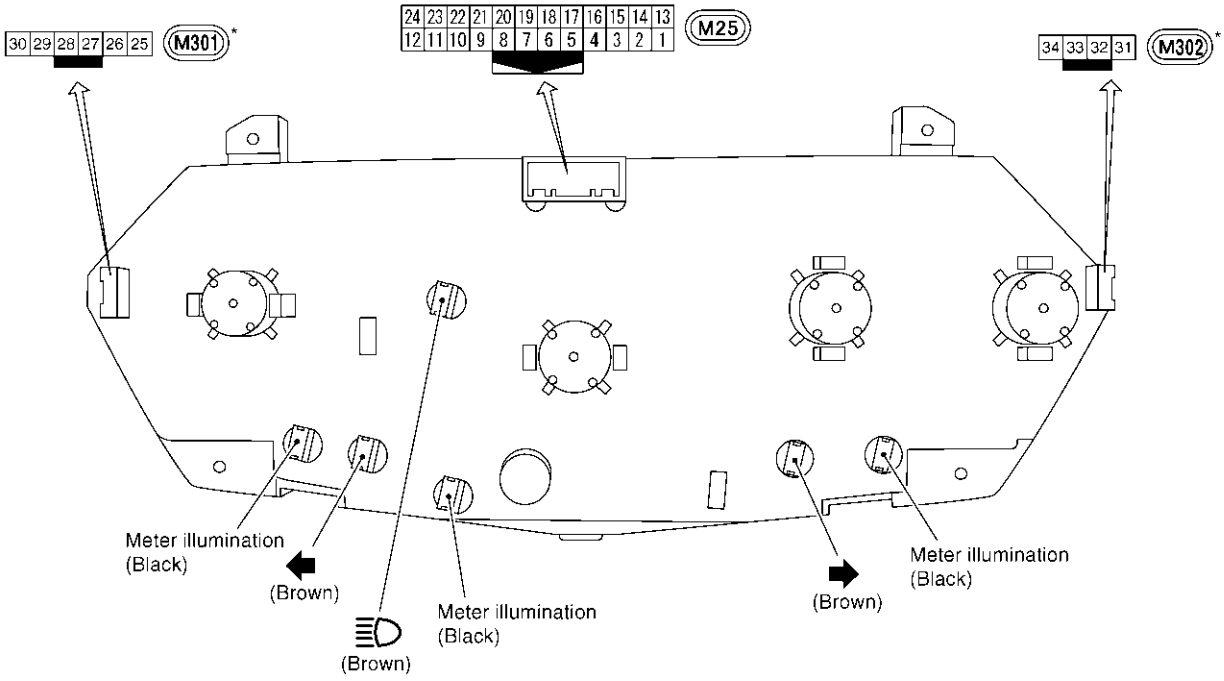

U : For U.S.A

C : For Canada

Blub socket color	Bulb wattage
Brown	1.4W
Black	3.0W

( ) : Bulb socket color

* THIS CONNECTOR IS NOT SHOW IN "HARNESS LAYOUT", PG SECTION.

PKIA2479E

Circuit Diagram

AKS004FX

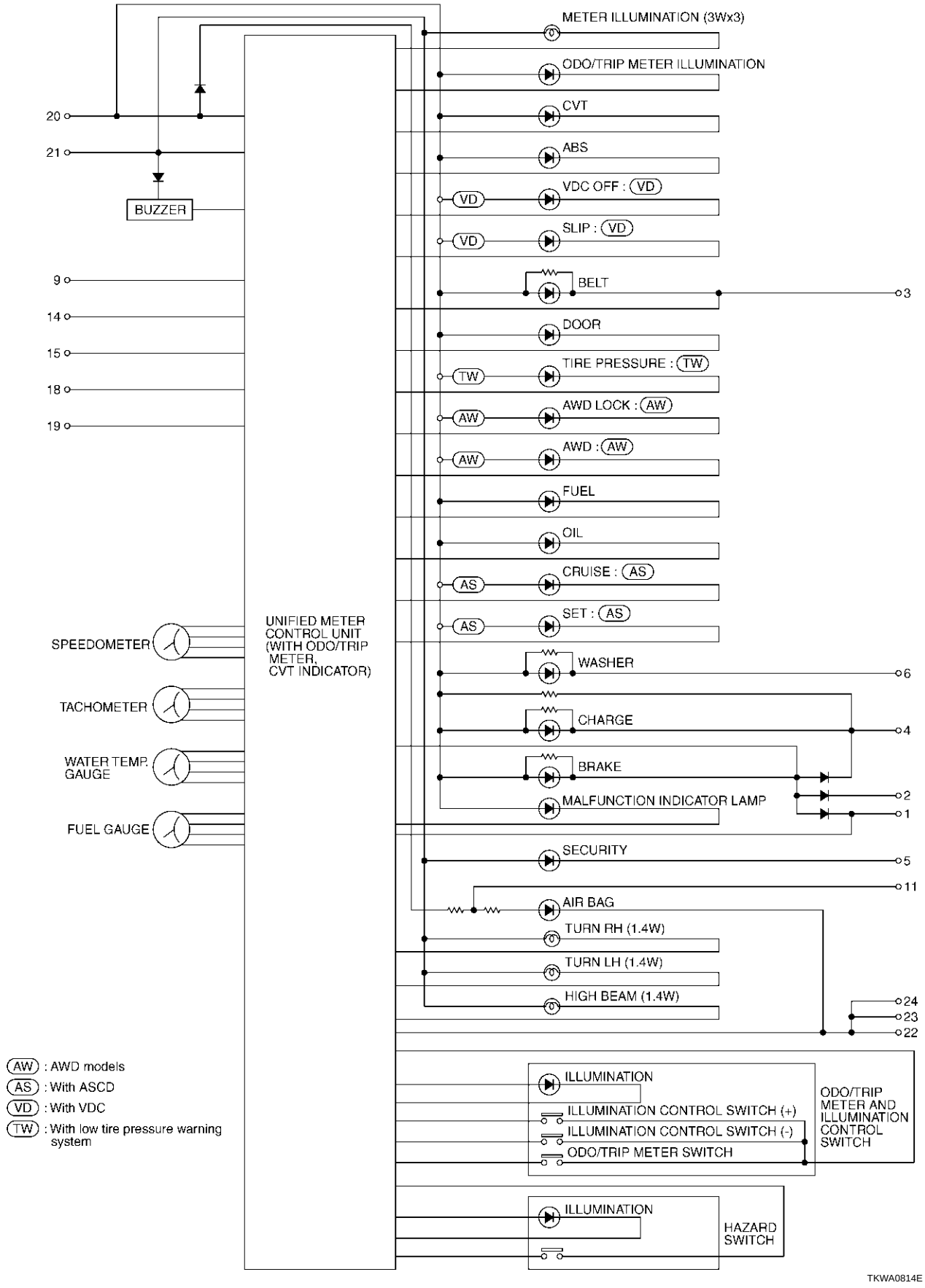

Wiring Diagram — METER —

AKS004FY

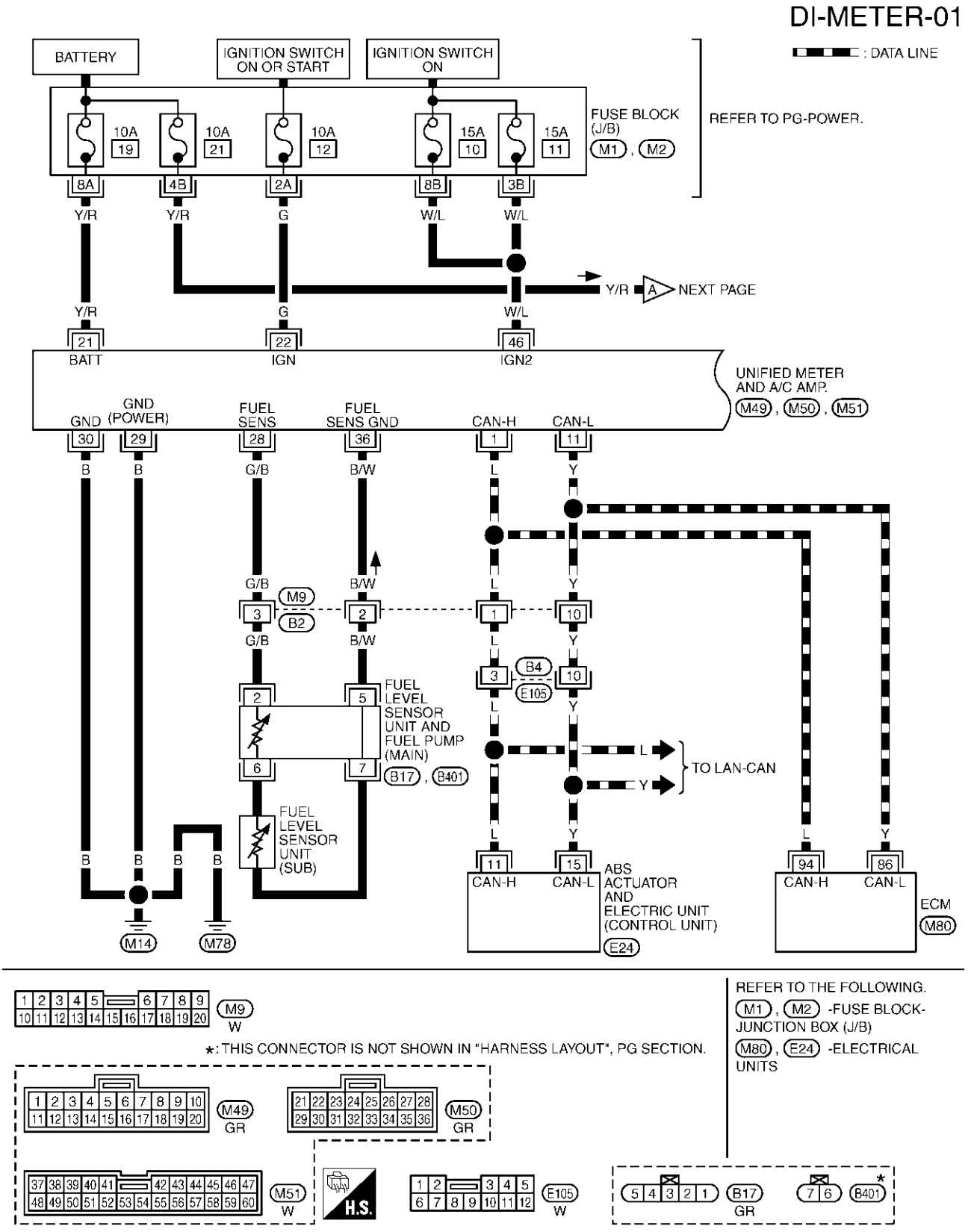

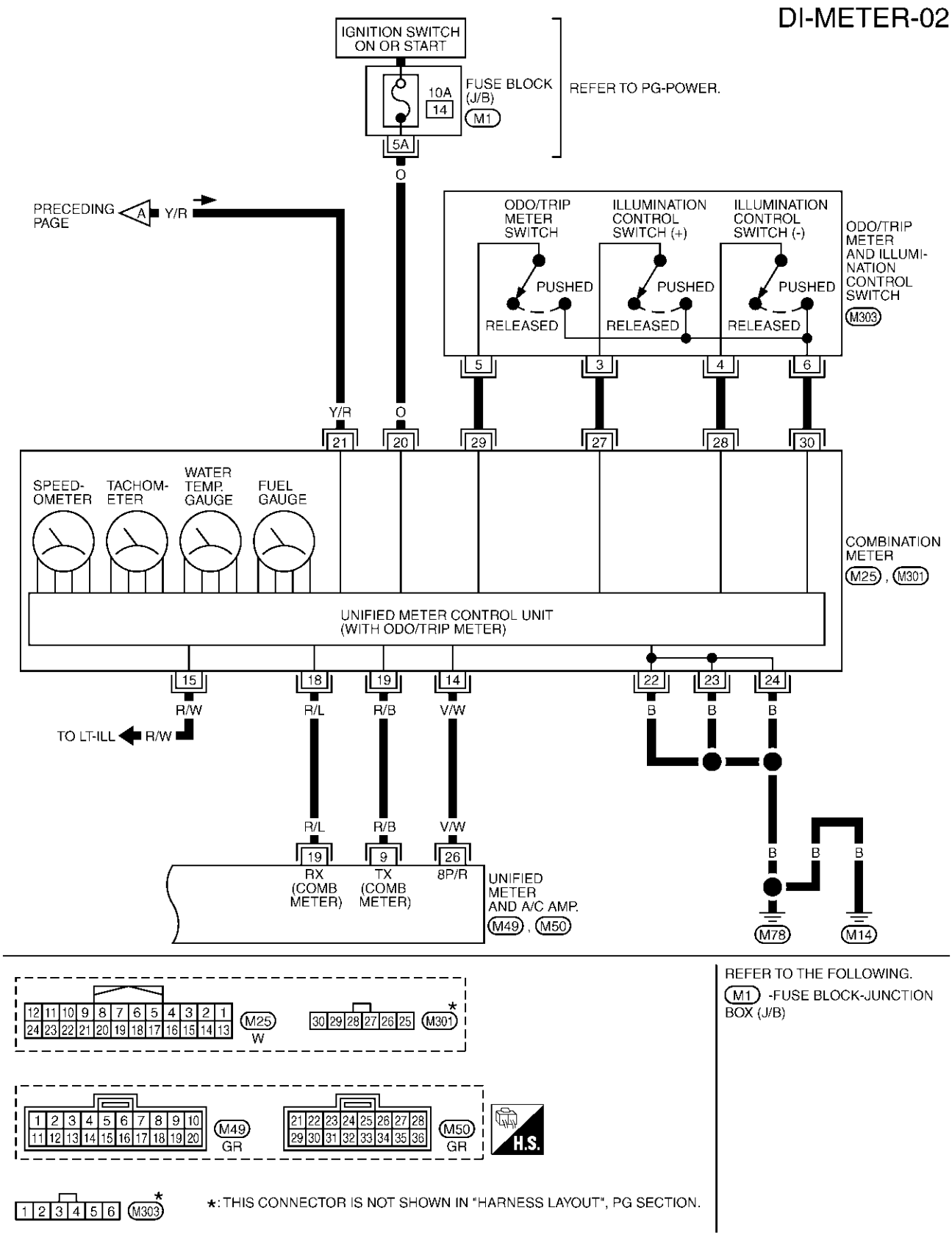
DI-METER-02
IGNITION SWITCH ON OR START
10A
14
FUSE BLOCK (J/B)
M1
REFER TO PG-POWER.
5A
O
PRECEDING PAGE
A
Y/R
ODO/TRIP METER SWITCH
ILLUMINATION CONTROL SWITCH (+)
ILLUMINATION CONTROL SWITCH (-)
PUSHED
RELEASED
ODO/TRIP METER AND ILLUMINATION CONTROL SWITCH
M303
5
3
4
6
Y/R
O
21
20
29
27
28
30
SPEED-OMETER
TACHOM-ETER
WATER TEMP GAUGE
FUEL GAUGE
COMBINATION METER
M25 , M301
UNIFIED METER CONTROL UNIT (WITH ODO/TRIP METER)
15
18
19
14
22
23
24
R/W
R/L
R/B
V/W
B
TO LT-ILL
R/W
R/L
R/B
V/W
19
9
26
RX (COMB METER)
TX (COMB METER)
8P/R
UNIFIED METER AND A/C AMP.
M49 , M50
M78
M14
M25
W
M301
M49
GR
M50
GR
H.S.
M303
*: THIS CONNECTOR IS NOT SHOWN IN "HARNESS LAYOUT", PG SECTION.
REFER TO THE FOLLOWING.
M1 -FUSE BLOCK-JUNCTION BOX (J/B)
TKWA0816E

Terminals and Reference Value for Combination Meter

AKS004FZ

Terminal No.	Wire color	Item	Measuring condition		Reference value (V)
			Ignition switch	Operation or condition	
14	V/W	Vehicle speed signal (8-pulse)	ON	Speedometer operated [When vehicle speed is approx. 40 km/h (25 MPH)]	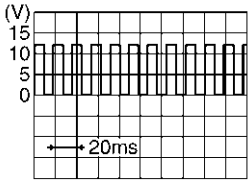 PKIA1935E
15	R/W	Illumination signal	ON	Lighting switch ON, then operate the illumination control switch.	<e.g.> When brightness level is midway. 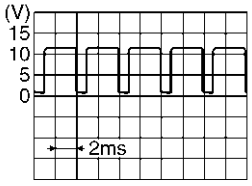 SKIA5872E
				Lighting switch OFF	Approx. 0
18	R/L	TX communication line (To unified meter and A/C amp.)	ON	—	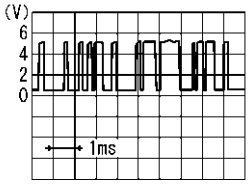 SKIA3361E
19	R/B	RX communication line (From unified meter and A/C amp.)	ON	—	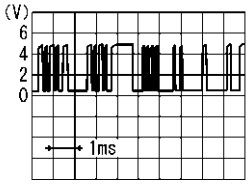 SKIA3362E
20	O	Ignition switch ON or START	ON	—	Battery voltage
21	Y/R	Battery power supply	OFF	—	Battery voltage
22	B	Ground	ON	—	Approx. 0
23					
24					
27	—	Illumination control switch (+)	—	—	Refer to DI-27, "Odo/Trip Meter and Illumination Control Switch Inspection" .
28	—	Illumination control switch (–)	—	—	
29	—	Odo/trip meter switch	—	—	
30	—	Odo/trip meter and illumination control switch ground	—	—	

Terminals and Reference Value for Unified Meter and A/C Amp.

AKS004G0

Terminal No.	Wire color	Item	Measuring condition		Reference value (V)
			Ignition switch	Operation or condition	
1	L	CAN H	—	—	—
9	R/B	TX communication line (To combination meter)	ON	—	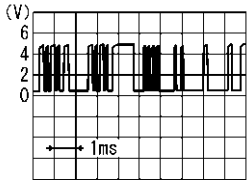 SKIA3362E
11	Y	CAN L	—	—	—
19	R/L	RX communication line (From combination meter)	ON	—	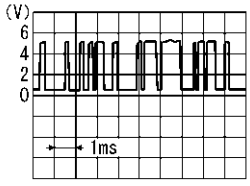 SKIA3361E
21	Y/R	Battery power supply	OFF	—	Battery voltage
22	G	Ignition switch ON or START	ON	—	Battery voltage
26	V/W	Vehicle speed signal (8-pulse)	ON	Speedometer operated [When vehicle speed is approx. 40 km/h (25 MPH)]	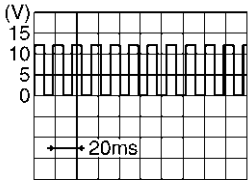 PKIA1935E
28	G/B	Fuel level sensor signal	—	—	Refer to DI-29, "FUEL LEVEL SENSOR UNIT CHECK" .
29	B	Ground (For power)	ON	—	Approx. 0
30	B	Ground	ON	—	Approx. 0
36	B/W	Fuel level sensor signal ground	—	—	—
46	W/L	Ignition switch ON	ON	—	Battery voltage

Meter/Gauge Operation and Odo/Trip Meter

AKS004G1

SELF-DIAGNOSIS FUNCTION

- Odo/trip meter segment and CVT indicator segment operation can be checked in self-diagnosis mode.
- Meters/gauges can be checked in self-diagnosis mode.

HOW TO ALTERNATE DIAGNOSIS MODE

1. Turn ignition switch ON, and switch the odo/trip meter to “trip A” or “trip B”.

   NOTE:
   If the diagnosis function is activated with the trip meter A displayed, the mileage on the trip meter A will indicate 0000.0 miles, but the actual trip mileage will be retained. (Trip B operates the same way.)
2. Turn ignition switch OFF.
3. While pushing the odo/trip meter switch, turn ignition switch ON again.
4. Make sure the trip meter displays “0000.0”.
5. Push the odo/trip meter switch at least 3 times. (Within 7 seconds after the ignition switch is turned ON.)

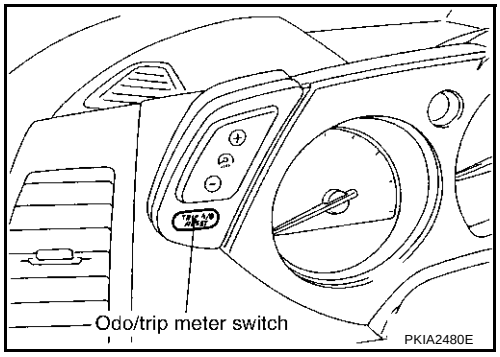

6. All the segments on the odo/trip meter and CVT indicator illuminate, and simultaneously the low-fuel warning lamp indicator illuminates. At this time, the unified meter control unit is turned to diagnosis mode.

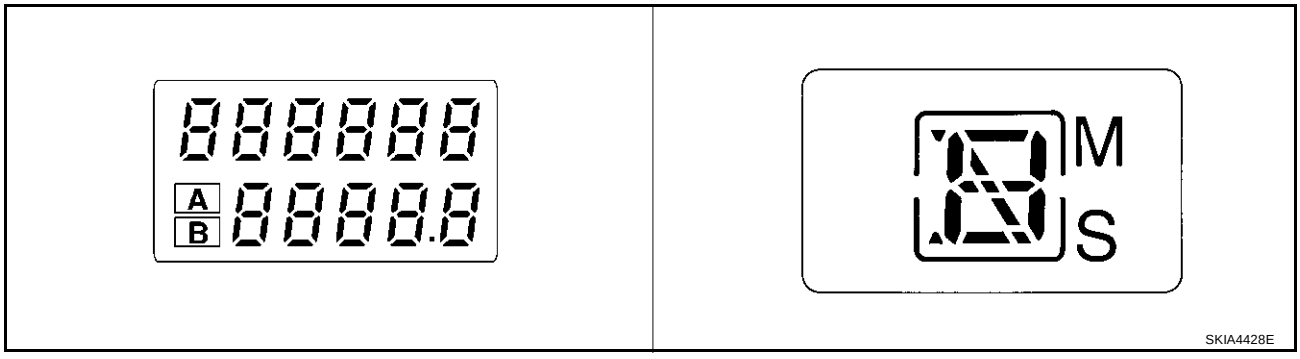

7. Push the odo/trip meter switch. Each meter/gauge should indicate as shown in the figure while pushing odo/trip meter switch. (At this time, the low-fuel warning lamp goes off.)

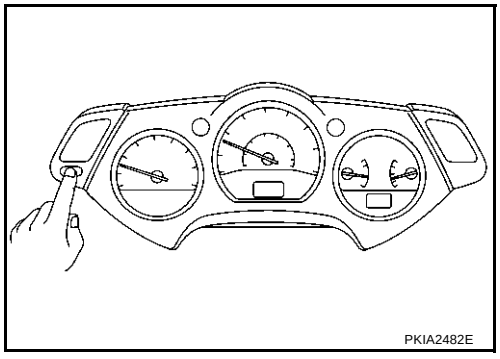

CONSULT-II Function

AKS004G2

Refer to DI-57, "CONSULT-II Function" in “UNIFIED METER AND A/C AMP”.

How to Proceed With Trouble Diagnosis

AKS004G3

1. Confirm the symptom or customer complaint.
2. Perform diagnosis according to diagnosis flow. Refer to DI-15, "Diagnosis Flow" .
3. According to the symptom chart, repair or replace the cause of the symptom.
4. Does the meter operate normally? If so, go to 5. If not, go to 2.
5. INSPECTION END

Diagnosis Flow

AKS004G4

1. CHECK SELF-DIAGNOSTIC RESULTS OF UNIFIED METER AND A/C AMP.

1. Start engine.
2. Select “METER A/C AMP” on CONSULT-II, and perform self-diagnosis of unified meter and A/C amp. Refer to DI-57, "CONSULT-II Function" .
3. After erasing the self-diagnosis result, perform self-diagnosis again.

Self-diagnostic results content

No malfunction detected>>GO TO 2.
Malfunction detected>> Go to DI-18, "Symptom Chart 2" .

2. CHECK WARNING LAMP ILLUMINATION

1. Turn ignition switch ON.
2. Make sure warning lamps (such as malfunction indicator lamp and oil pressure warning lamp) illuminate.

Do warning lamps illuminate?

YES >> GO TO 3.
NO >> Check ignition power supply system of combination meter. Refer to DI-16, "Power Supply and Ground Circuit Inspection" .

3. CHECK SELF-DIAGNOSIS OPERATION OF COMBINATION METER

Perform combination meter self-diagnosis. Refer to DI-14, "SELF-DIAGNOSIS FUNCTION" .

Does self-diagnosis function operate?

YES >> GO TO 4.
NO >> Check the following.

- Battery power supply of combination meter and ground circuit. Refer to DI-16, "Power Supply and Ground Circuit Inspection"
- Odo/trip meter switch. Refer to DI-27, "Odo/Trip Meter and Illumination Control Switch Inspection"

4. CHECK ODO/TRIP METER OPERATION

Check segment display status of odo/trip meter.

Is the display normal?

YES >> GO TO 5.
NO >> Replace combination meter.

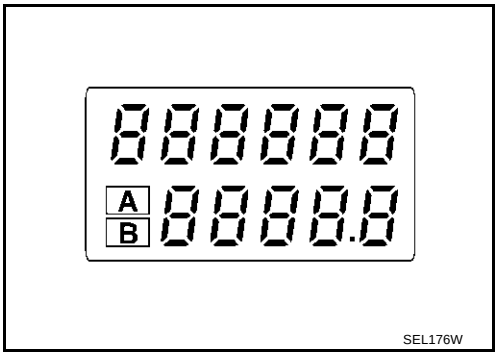

5. CHECK LOW-FUEL WARNING LAMP ILLUMINATION CONFIRMATION

During low-fuel warning lamp check, confirm illumination of low-fuel warning lamp.

Condition of odo/trip meter switch	Low-fuel warning lamp
Pushed	Does not illuminate.
Released	Illuminates.

OK or NG

OK >> GO TO 6.
NG >> Replace combination meter.

6. CHECK COMBINATION METER CIRCUIT

Check indication of each meter/gauge in self-diagnosis mode.

OK or NG

OK >> Go to DI-18, "Symptom Chart 1" .
NG >> Replace combination meter.

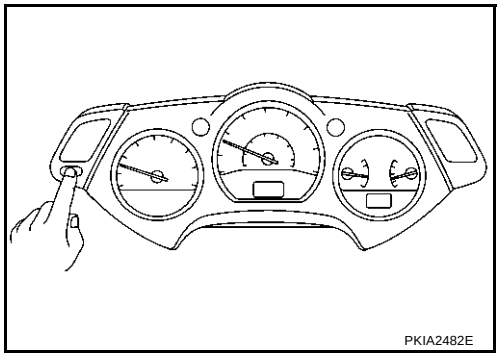

Power Supply and Ground Circuit Inspection

AKS004G5

1. CHECK FUSE

Check for blown combination meter and unified meter and A/C amp. fuses.

Unit	Power source	Fuse No.
Combination meter	Battery	21
Unified meter and A/C amp.	Battery	19
Combination meter	Ignition switch ON or START	14
Unified meter and A/C amp.	Ignition switch ON or START	12
	Ignition switch ON	10, 11

Refer to DI-10, "Wiring Diagram — METER —" .

OK or NG

OK >> GO TO 2.
NG >> If fuse is blown, be sure to eliminate cause of malfunction before installing new fuse. Refer to PG-3, "POWER SUPPLY ROUTING CIRCUIT" .

2. CHECK POWER SUPPLY CIRCUIT

1. Disconnect combination meter connector and unified meter and A/C amp. connector.
2. Check voltage between combination meter harness connector terminals and ground.

Terminals			Ignition switch position		
(+)		(–)	OFF	ACC	ON
Connector	Terminal (Wire color)				
M25	21 (Y/R)	Ground	Battery voltage	Battery voltage	Battery voltage
	20 (O)		0V	0V	Battery voltage

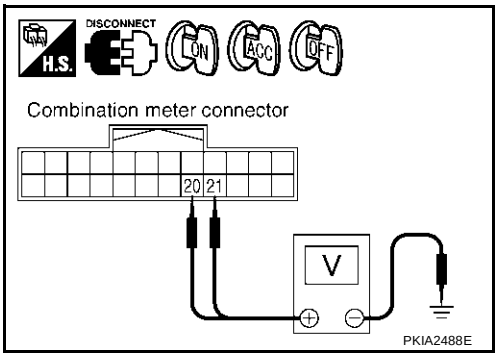

3. Check voltage between unified meter and A/C amp. harness connector terminals and ground.

Terminals			Ignition switch position		
(+)		(–)	OFF	ACC	ON
Connector	Terminal (Wire color)				
M50	21 (Y/R)	Ground	Battery voltage	Battery voltage	Battery voltage
	22 (G)		0V	0V	Battery voltage
M51	46 (W/L)		0V	0V	Battery voltage

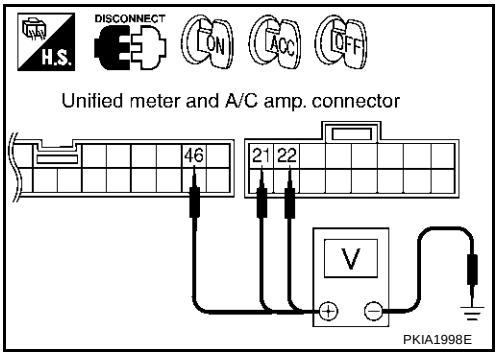

OK or NG

OK >> GO TO 3.

NG >> Check the following.

- Harness for open between combination meter and fuse
- Harness for open between unified meter and A/C amp. and fuse

3. CHECK GROUND CIRCUIT

1. Turn ignition switch OFF.
2. Check continuity between combination meter harness connector terminals and ground.

Terminals			Continuity
(+)		(–)	
Connector	Terminal (Wire color)		
M25	22 (B)	Ground	Yes
	23 (B)		
	24 (B)		

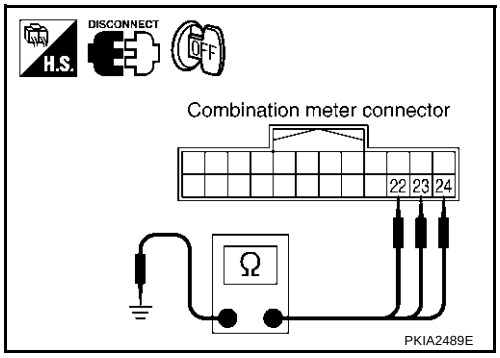

3. Check continuity between unified meter and A/C amp. harness connector terminals and ground.

Terminals			Continuity
(+)		(–)	
Connector	Terminal (Wire color)		
M50	29 (B)	Ground	Yes
	30 (B)		

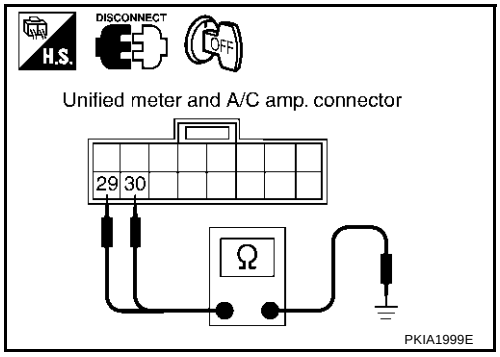

OK or NG

OK >> INSPECTION END
NG >> Repair harness or connector.

Symptom Chart 1

AKS004G6

Trouble phenomenon	Possible cause
Indication is irregular for the speedometer and odo/trip meter.	Refer to DI-19, "Vehicle Speed Signal Inspection" .
Tachometer indication is malfunction.	Refer to DI-21, "Engine Speed Signal Inspection" .
Water temperature gauge indication is malfunction.	Refer to DI-22, "Water Temperature Signal Inspection" .
Fuel gauge indication is malfunction.	Refer to DI-23, "Fuel Level Sensor Signal Inspection 1" .
Low-fuel warning lamp indication is irregular.	Refer to DI-24, "Fuel Level Sensor Signal Inspection 2" .
Indications are irregular for more than one gauge.	Replace combination meter.
CVT position indicator is malfunction.	Refer to DI-72, "CVT INDICATOR" .
Illumination control does not operate.	Refer to DI-27, "Odo/Trip Meter and Illumination Control Switch Inspection" .

Symptom Chart 2

AKS004G7

Displayed item [Code]	Inspection contents	Possible cause
CAN COMM CIRC [U1000]	Inspect the CAN communication.	Refer to DI-24, "CAN Communication System Inspection" . **CAUTION:** **Even when there is no malfunction on CAN communication system, malfunction may be misinterpreted when battery has low voltage (when maintaining 7V-8V for about 2 seconds) or 10A fuse [No. 19, located in the fuse block (J/B)] fuse is disconnected.**

Displayed item [Code]	Inspection contents	Possible cause
METER COMM CIRC [B2202]	Inspect the communication line between combination meter and unified meter and A/C amp.	Refer to DI-24, "Communication Line Inspection" .
VEHICLE SPEED CIRC [B2205]	Inspect the vehicle speed input signal.	Perform the ABS actuator and electric unit (control unit) self-diagnosis. Refer to BRC-112, "CONSULT-II Functions" (with VDC system) or BRC-41, "CONSULT- II Functions" (without VDC system). **CAUTION:** **Even when there is no malfunction on speed signal system, malfunction may be misinterpreted when battery has low voltage (when maintaining 7V-8V for about 2 seconds).**

Vehicle Speed Signal Inspection

AKS004G8

1. CHECK ABS ACTUATOR AND ELECTRIC UNIT (CONTROL UNIT) SELF-DIAGNOSIS

Perform the ABS actuator and electric unit (control unit) self-diagnosis. Refer to BRC-112, "CONSULT-II Functions" (with VDC system) or BRC-41, "CONSULT- II Functions" (without VDC system).

OK or NG

OK >> GO TO 2.
NG >> Check applicable parts.

2. CHECK UNIFIED METER AND A/C AMP. OUTPUT SIGNAL

1. Start engine and drive vehicle at approximately 40 km/h (25 MPH).
2. Check voltage signal between combination meter harness connector M25 terminal 14 (V/W) and ground with simple oscilloscope of CONSULT-II.

14 (V/W) - Ground:

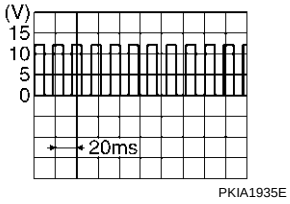

PKIA1935E

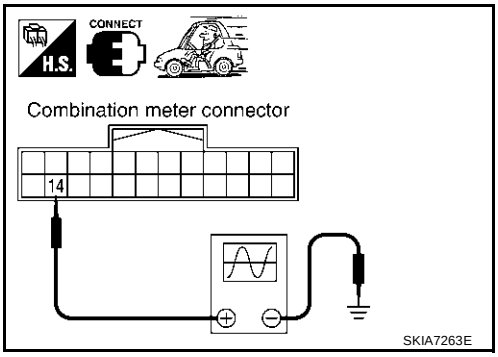

OK or NG

OK >> Replace combination meter.
NG >> GO TO 3.

3. CHECK VOLTAGE OF COMBINATION METER

1. Turn ignition switch OFF.
2. Disconnect unified meter and A/C amp. connector, shift lock control unit connector, display control unit connector (with NAVI), display unit connector (without NAVI) and audio unit connector (BOSE system).
3. Turn ignition switch ON.
4. Check voltage between combination meter harness connector M25 terminal 14 (V/W) and ground.

Approx. 12V

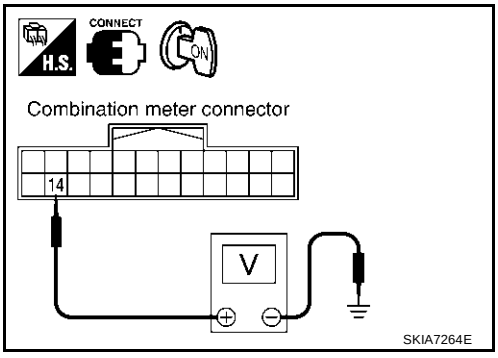

OK or NG

OK >> GO TO 4.
NG >> Replace combination meter.

4. CHECK CONTINUITY BETWEEN COMBINATION METER AND UNIFIED METER AND A/C AMP.

1. Disconnect combination meter connector.
2. Check continuity between combination meter harness connector M25 terminal 14 (V/W) and unified meter and A/C amp. harness connector M50 terminal 26 (V/W).

   Continuity should exist.

3. Check continuity between combination meter harness connector M25 terminal 14 (V/W) and ground.

   Continuity should not exist.

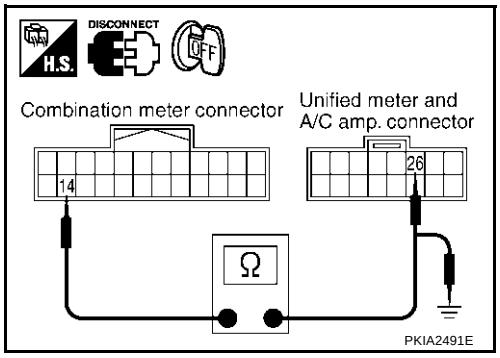

OK or NG

OK >> Replace unified meter and A/C amp. Refer to DI-60, "Removal and Installation of Unified Meter and A/C Amp." .

NG >> Repair harness or connector.

Engine Speed Signal Inspection

AKS004G9

1. CHECK UNIFIED METER AND A/C AMP. OUTPUT SIGNAL

1. Start engine and select “METER A/C AMP” on CONSULT-II.
2. Using “TACHO METER” on the data monitor, compare the value of data monitor with tachometer pointer of combination meter.

OK or NG

OK >> GO TO 2.
NG >> Replace combination meter.

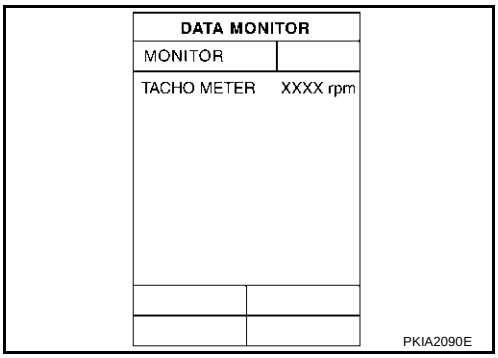

2. CHECK UNIFIED METER AND A/C AMP. INPUT SIGNAL

1. Select “ENGINE” on CONSULT-II.
2. Using “ENG SPEED” on the data monitor, print out the CONSULT-II screen when the engine is idling.
3. Select “METER A/C AMP” on CONSULT-II.
4. Using “TACHO METER” on the data monitor, compare the value of data monitor of the idling speed with that of the “ENG SPEED”.

OK or NG

OK >> Perform ECM self-diagnosis. Refer to EC-92, "TROUBLE DIAGNOSIS" .
NG >> Replace unified meter and A/C amp. Refer to DI-60, "Removal and Installation of Unified Meter and A/C Amp." .

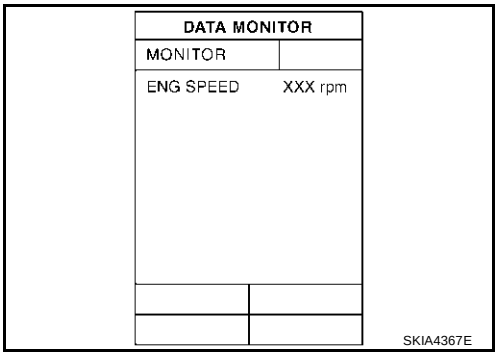

Water Temperature Signal Inspection

AKS004GA

1. CHECK UNIFIED METER AND A/C AMP. OUTPUT SIGNAL

1. Start engine and select “METER A/C AMP” on CONSULT-II.
2. Using “W TEMP METER” on the data monitor, compare the value of data monitor with water temperature gauge pointer of combination meter.

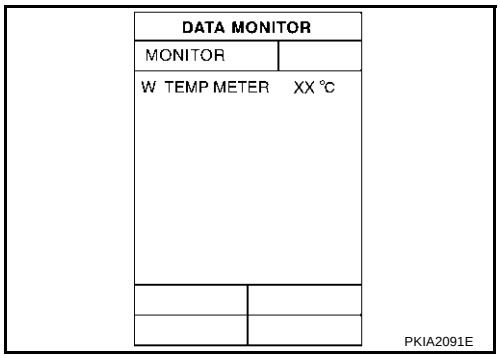

Water temperature gauge pointer	Reference value of data monitor [°C (°F)]
Hot	Approx. 130 (266)
Middle	Approx. 70 - 105 (158 - 221)
Cold	Approx. 50 (122)

OK or NG

OK >> GO TO 2.
NG >> Replace combination meter.

2. CHECK UNIFIED METER AND A/C AMP. INPUT SIGNAL

1. Select “ENGINE” on CONSULT-II.
2. Using “COOLAN TEMP/S” on the data monitor, print out the CONSULT-II screen.
3. Select “METER A/C AMP” on CONSULT-II.
4. Using “W TEMP METER” on the data monitor, compare the value of data monitor with that of the “COOLAN TEMP/S”.

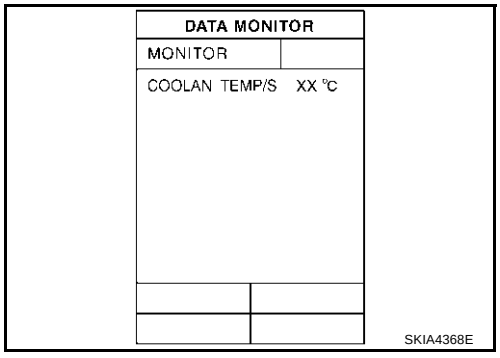

OK or NG

OK >> Perform ECM self-diagnosis. Refer to EC-92, "TROUBLE DIAGNOSIS" .
NG >> Replace unified meter and A/C amp. Refer to DI-60, "Removal and Installation of Unified Meter and A/C Amp." .

Fuel Level Sensor Signal Inspection 1

AKS004GB

The following symptoms do not indicate a malfunction.

FUEL GAUGE

- Depending on vehicle position or driving circumstance, the fuel in the tank flows and the pointer may fluctuate.
- If the vehicle is fueled with the ignition switch ON, the pointer will move slowly.

1. CHECK UNIFIED METER AND A/C AMP. INPUT SIGNAL

1. Select “METER A/C AMP” on CONSULT-II.
2. Using “FUEL METER” on the data monitor, compare the value of data monitor with fuel gauge pointer of combination meter.

Fuel gauge pointer	Reference value of data monitor [lit.]
Full	Approx. 78
Three quarters	Approx. 63
Half	Approx. 43
A quarter	Approx. 22
Empty	Approx. 7

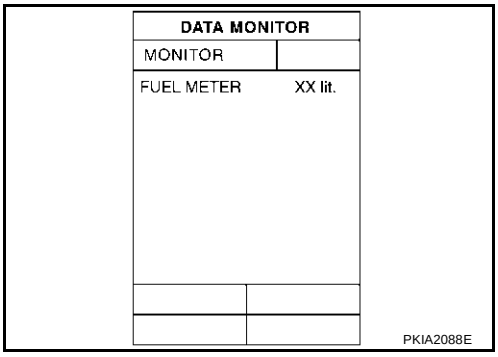

OK or NG

OK >> GO TO 2.
NG >> Replace combination meter.

2. CHECK FUEL LEVEL SENSOR

Check components. Refer to DI-29, "FUEL LEVEL SENSOR UNIT CHECK" .

OK or NG

OK >> GO TO 3.
NG >> Replace fuel level sensor unit.

3. CHECK FUEL LEVEL SENSOR CIRCUIT 1

1. Disconnect fuel level sensor unit and fuel pump (main) connector and unified meter and A/C amp. connector.
2. Check continuity between fuel level sensor unit and fuel pump (main) harness connector B17 terminal 2 (G/B) and unified meter and A/C amp. harness connector M50 terminal 28 (G/B).

   Continuity should exist.

3. Check continuity between fuel level sensor unit and fuel pump (main) harness connector B17 terminal 2 (G/B) and ground.

   Continuity should not exist.

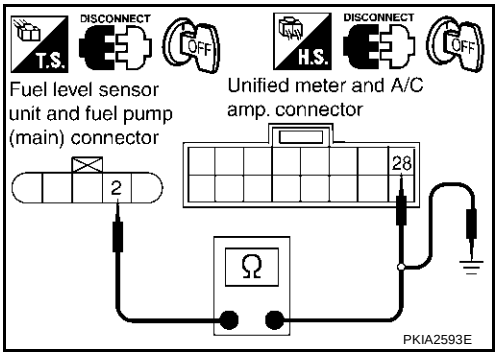

OK or NG

OK >> GO TO 4.
NG >> Repair harness or connector.

4. CHECK FUEL LEVEL SENSOR CIRCUIT 2

1. Check continuity between fuel level sensor unit and fuel pump (main) harness connector B17 terminal 5 (B/W) and unified meter and A/C amp. harness connector M50 terminal 36 (B/W).

   Continuity should exist.

2. Check continuity between fuel level sensor unit and fuel pump (main) harness connector B17 terminal 5 (B/W) and ground.

   Continuity should not exist.

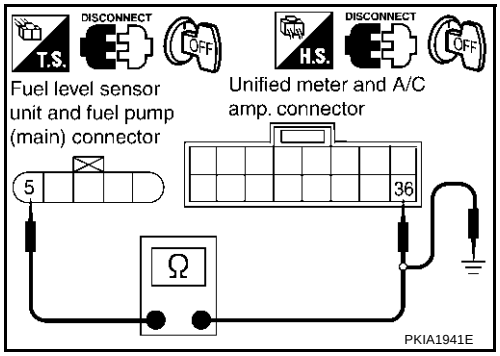

OK or NG

OK >> GO TO 5.
NG >> Repair harness or connector.

5. CHECK INSTALLATION CONDITION

Check fuel level sensor unit installation, and check whether the float arm interferes or binds with any of the internal components in the fuel tank.

OK or NG

OK >> Replace unified meter and A/C amp. Refer to DI-60, "Removal and Installation of Unified Meter and A/C Amp." .
NG >> Install fuel level sensor unit properly.

Fuel Level Sensor Signal Inspection 2

AKS004GC

The following symptoms do not indicate a malfunction.

LOW-FUEL WARNING LAMP

Depending on vehicle position or driving circumstance, the fuel in the tank flows and the warning lamp ON timing may change.

1. CHECK FUEL GAUGE

Check if fuel gauge is normally operating.

OK or NG

OK >> Replace combination meter.
NG >> Go to DI-23, "Fuel Level Sensor Signal Inspection 1" .

CAN Communication System Inspection

AKS004GE

1. CHECK CAN COMMUNICATION

1. Select “SELF-DIAG RESULTS” mode for “METER A/C AMP” with CONSULT-II.
2. Print out CONSULT-II screen.

>> Go to “CAN system”. Refer to LAN-10, "Precautions When Using CONSULT-II" .

Communication Line Inspection

AKS004GF

1. CHECK CONNECTOR

1. Turn ignition switch OFF.
2. Check combination meter, unified meter and A/C amp. and terminals (combination meter-side, unified meter and A/C amp.-side and harness-side) for looseness or bent terminals.

OK or NG

OK >> GO TO 2.
NG >> Repair terminal or connector.

2. CHECK METER/GAUGES VISUALLY

Does the pointer on the meter/gauges fluctuate at the engine start?

Is the fluctuation acceptable?

YES >> GO TO 3.
NO >> GO TO 6.

3. CHECK CONTINUITY COMMUNICATION CIRCUIT (TX: COMBINATION METER)

1. Turn ignition switch OFF.
2. Disconnect combination meter connector and unified meter and A/C amp. connector.
3. Check continuity between combination meter harness connector M25 terminal 18 (R/L) and unified meter and A/C amp. harness connector M49 terminal 19 (R/L).

   Continuity should exist.

4. Check continuity between combination meter harness connector M25 terminal 18 (R/L) and ground.

   Continuity should not exist.

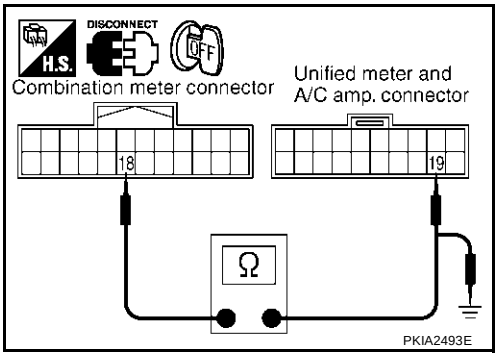

OK or NG

OK >> GO TO 4.
NG >> Repair harness or connector.

4. CHECK VOLTAGE OF UNIFIED METER AND A/C AMP.

1. Connect unified meter and A/C amp. connector.
2. Turn ignition switch ON.
3. Check voltage between combination meter harness connector M25 terminal 18 (R/L) and ground.

   Approx. 5V

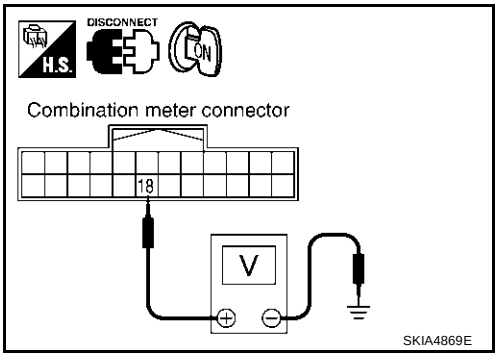

OK or NG

OK >> GO TO 5.
NG >> Replace unified meter and A/C amp. Refer to DI-60, "Removal and Installation of Unified Meter and A/C Amp." .

5. CHECK VOLTAGE SIGNAL OF COMBINATION METER

1. Turn ignition switch OFF and connect combination meter connector.
2. Turn ignition switch ON.
3. Check voltage signal between combination meter harness connector M25 terminal 18 (R/L) and ground with simple oscilloscope of CONSULT-II.

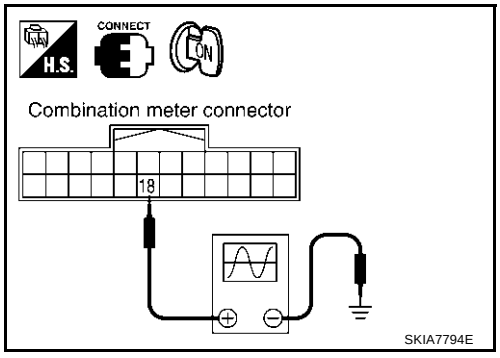

18 (R/L) - Ground:

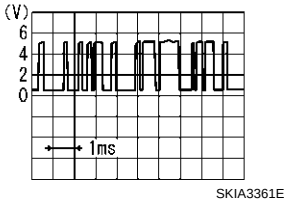

OK or NG

OK >> Replace unified meter and A/C amp. Refer to DI-60, "Removal and Installation of Unified Meter and A/C Amp." .

NG >> Replace combination meter.

6. CHECK CONTINUITY COMMUNICATION CIRCUIT (RX: COMBINATION METER)

1. Turn ignition switch OFF.
2. Disconnect combination meter connector and unified meter and A/C amp. connector.
3. Check continuity between combination meter harness connector M25 terminal 19 (R/B) and unified meter and A/C amp. harness connector M49 terminal 9 (R/B).

   Continuity should exist.

4. Check continuity between combination meter harness connector M25 terminal 19 (R/B) and ground.

   Continuity should not exist.

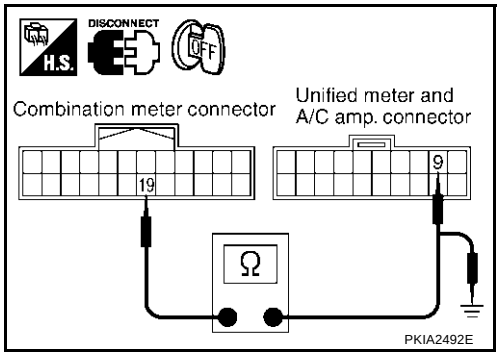

OK or NG

OK >> GO TO 7.

NG >> Repair harness or connector.

7. CHECK VOLTAGE OF COMBINATION METER

1. Connect combination meter connector.
2. Turn ignition switch ON.
3. Check voltage between unified meter and A/C amp. harness connector M49 terminal 9 (R/B) and ground.

   Approx. 5V

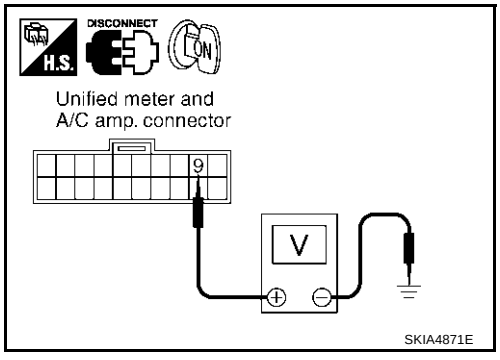

OK or NG

OK >> GO TO 8.

NG >> Replace combination meter.

8. CHECK VOLTAGE SIGNAL OF UNIFIED METER AND A/C AMP.

1. Turn ignition switch OFF and connect unified meter and A/C amp. connector.
2. Turn ignition switch ON.
3. Check voltage signal between combination meter harness connector M25 terminal 19 (R/B) and ground with simple oscilloscope of CONSULT-II.

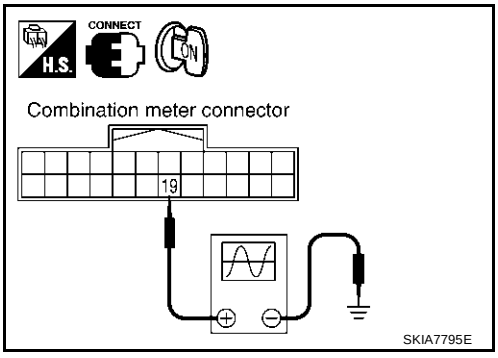

19 (R/B) - Ground:

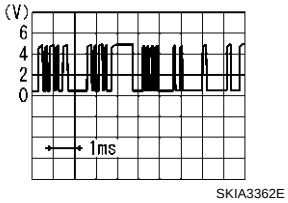

OK or NG

OK >> Replace combination meter.
NG >> Replace unified meter and A/C amp. Refer to DI-60, "Removal and Installation of Unified Meter and A/C Amp." .

Odo/Trip Meter and Illumination Control Switch Inspection

AKS004GH

1. CHECK ODO/TRIP METER AND ILLUMINATION CONTROL SWITCH

1. Remove combination meter. Refer to DI-29, "Removal and Installation of Combination Meter" .
2. Remove meter lid. Refer to DI-30, "Disassembly and Assembly of Combination Meter" .
3. Check continuity between odo/trip meter and illumination control switch harness connector M303 terminals 3, 4 or 5 and 6.

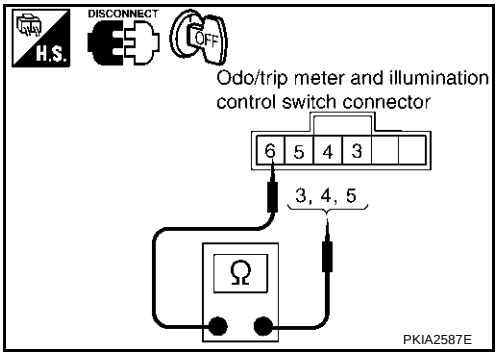

Terminal		Condition	Continuity
3	6	Illumination control switch (+) is pushed.	Yes
		Illumination control switch (+) is released.	No
4		Illumination control switch (–) is pushed.	Yes
		Illumination control switch (–) is released.	No
5		Odo/trip meter switch is pushed.	Yes
		Odo/trip meter switch is released.	No

OK or NG

OK >> Replace combination meter.
NG >> Replace odo/trip meter and illumination control switch.

Fuel Gauge Pointer Fluctuates, Indicator Wrong Value or Varies

AKS004GI

1. CHECK FUEL GAUGE FLUCTUATION

Test drive vehicle to see if gauge fluctuates only during driving or before or after stopping.

Does the indication value vary only during driving or before or after stopping?

YES >> The pointer fluctuation may be caused by fuel level change in the fuel tank. Condition is normal.
NO >> Ask the customer about the situation when the symptom occurs in detail, and perform the trouble diagnosis.

Fuel Gauge Does Not Move to Full-position

AKS004GJ

1. QUESTION 1

Does it take a long time for the pointer to move to full-position?

YES or NO

YES >> GO TO 2.
NO >> GO TO 3.

2. QUESTION 2

Was the vehicle fueled with the ignition switch ON?

YES or NO

YES >> Be sure to fuel the vehicle with the ignition switch OFF. Otherwise, it will take a long time to move to full-position because of the characteristic of the fuel gauge.
NO >> GO TO 3.

3. QUESTION 3

Is the vehicle parked on an incline?

YES or NO

YES >> Check the fuel level indication with vehicle on a level surface.
NO >> GO TO 4.

4. QUESTION 4

During driving, does the fuel gauge pointer move gradually toward empty-position?

YES or NO

YES >> Check the fuel level sensor unit. Refer to DI-29, "FUEL LEVEL SENSOR UNIT CHECK" .
NO >> The float arm may interfere or bind with any of the components in the fuel tank.

Electrical Components Inspection

AKS004GK

FUEL LEVEL SENSOR UNIT CHECK

For removal, refer to FL-5, "FUEL LEVEL SENSOR UNIT, FUEL FILTER AND FUEL PUMP ASSEMBLY" .

Check Fuel Level Sensor Unit and Fuel Pump (Main)

Check resistance between fuel level sensor unit and fuel pump (main) connector terminal 2 and 6.

Terminal		Float position mm (in)			Resistance value Ω
2	6	*1	Empty	15 (0.59)	Approx. 81.5
		*2	Full	193 (7.6)	Approx. 2.5

*1 and *2: When float rod is in contact with stopper.

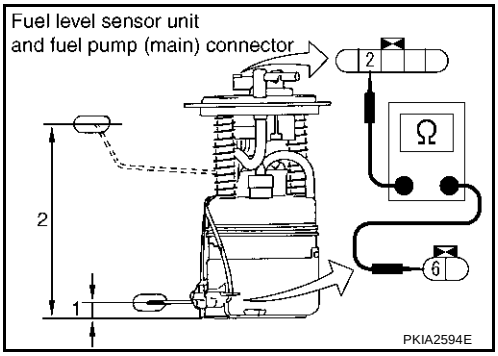

Check Fuel Level Sensor Unit and Pump (Main) Harness

Check continuity between fuel level sensor unit and fuel pump (main) connector terminal 5 and 7.

Continuity should exist.

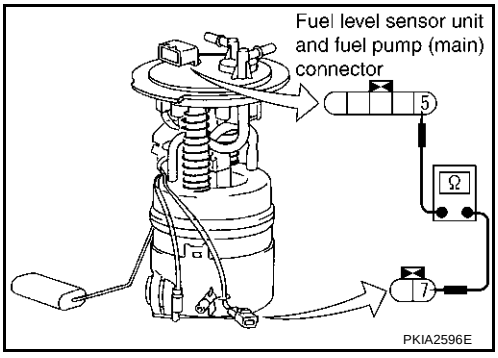

Check Fuel Level Sensor Unit (Sub)

Check resistance between fuel level sensor unit and fuel pump (main) connector terminals 6 and 7.

Terminal		Float position mm (in)			Resistance value Ω
6	7	*1	Empty	10 (0.39)	Approx. 45.2
		*2	Full	198 (7.8)	Approx. 2.5

*1 and *2: When float rod is in contact with stopper.

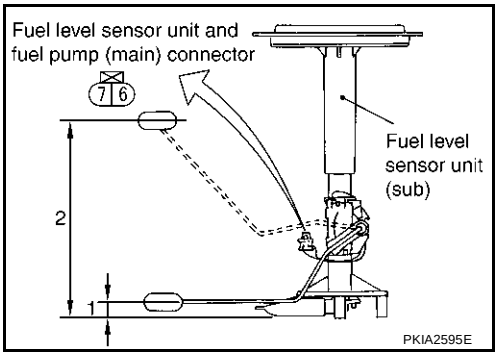

Removal and Installation of Combination Meter

AKS004GL

REMOVAL

1. Remove driver's instrument lower cover. Refer to IP-11, "Removal and Installation" .
2. Remove column cover. Refer to IP-11, "Removal and Installation" .
3. Remove screws (2) and remove combination meter.

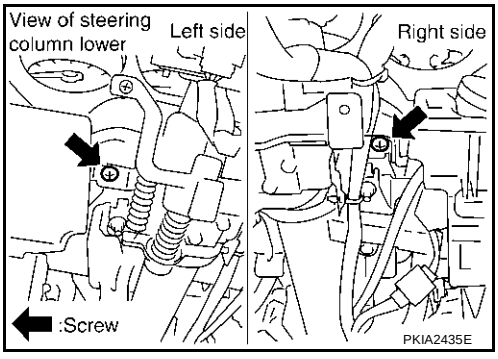

INSTALLATION

Install in the reverse order of removal.

Disassembly and Assembly of Combination Meter

AKS004GM

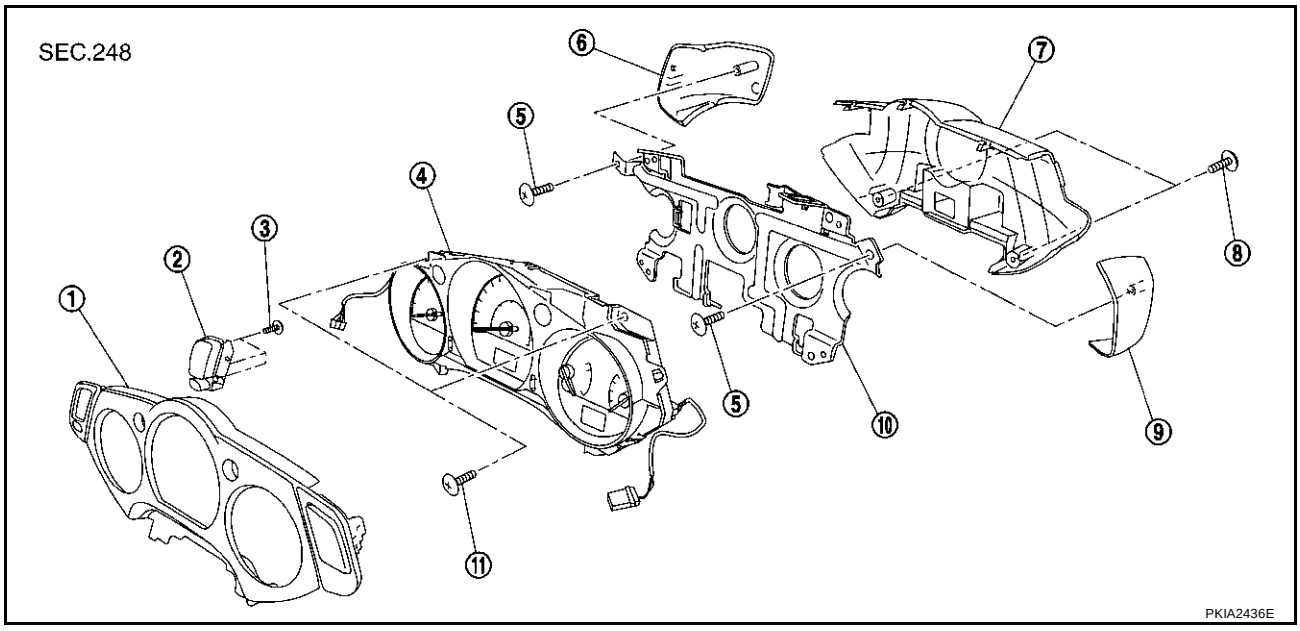

1. Meter lid	2. Odo/trip meter and illumination control switch	3. Screws
4. Unified meter control unit assembly	5. Screws	6. Switch cover (Left side)
7. Rear cover	8. Screws	9. Switch cover (Right side)
10. Bracket	11. Screws	

DISASSEMBLY

1. Remove screws (2). Disconnect odo/trip meter and illumination control switch and hazard switch connectors and remove meter lid.

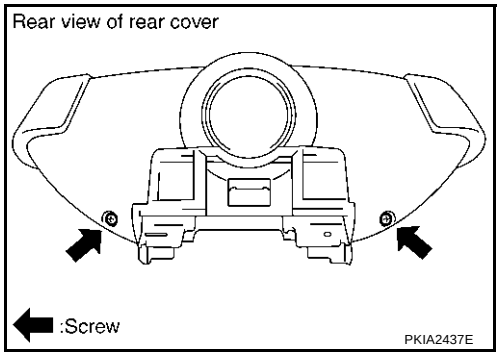

2. Remove screws (3) and remove odo/trip meter and illumination control switch.

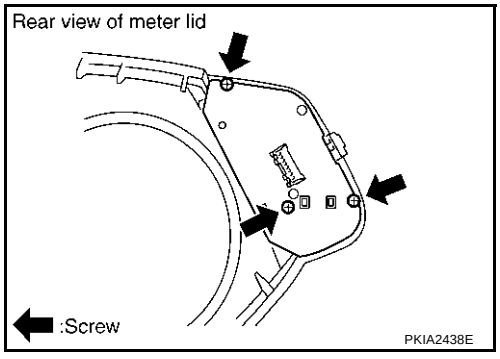

3. Remove screws (2) and remove switch cover.

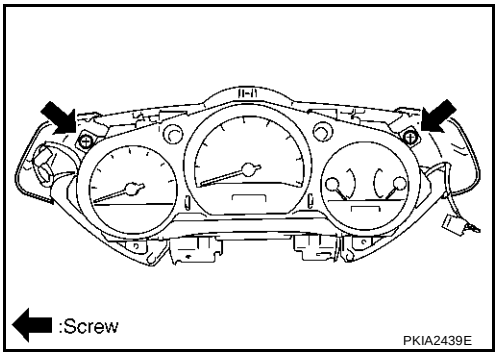

4. Remove screws (2) and remove rear cover.
5. Disengaged the tabs (2) to separate bracket.
6. Remove bulbs.

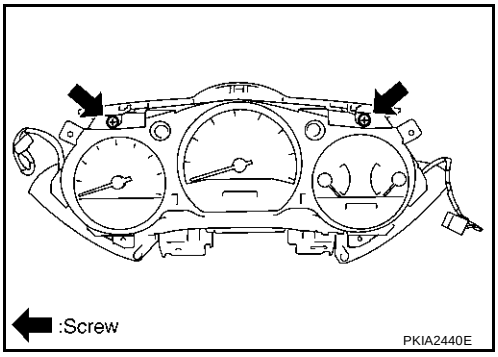

ASSEMBLY

Assemble in the reverse order of disassembly.

UNIFIED METER AND A/C AMP

PFP:27760

System Description

AKS004GN

- For the unified meter and A/C amp., the signal line required for controlling the combination meter are integrated in the A/C auto amp.
- Unified meter and A/C amp. controls each operation for A/C auto amp. For information regarding A/C control, refer to ATC-25, "AIR CONDITIONER CONTROL" in ATC section.
- Unified meter and A/C amp. inputs necessary information for combination meter from each unit by CAN communication and so on.
- And unified meter and A/C amp. outputs these signals using communication line (TX, RX) between unified meter and A/C amp. and combination meter.
- Other input signals are also sent to the ECM, TCM, AWD control unit, BCM, display unit (without NAVI) and display control unit (with NAVI) using CAN communication.
- The signals required for the distance to empty (DTE) display are centralized in the unified meter and A/C amp., converted into data, and sent to the display unit (without NAVI) or display control unit (with NAVI) using CAN communication.
- The unified meter and A/C amp. have a CONSULT-II function (self-diagnostic results, CAN diagnostic support monitor, data monitor).

INPUT/OUTPUT SIGNALS

Between Unified Meter and A/C amp. and Combination Meter

Unit	Input	Output
Unified meter and A/C amp.	● Seat belt buckle switch signal (Driver's side) ● Parking brake signal ● Illumination control nighttime required signal ● Refuel status signal ● Low-fuel warning lamp condition signal ● Combination meter receive error signal ● Delivery destination data signal ● Combination meter specifications signal	● Vehicle speed signal (8-pulse) ● Engine speed signal ● Engine coolant temperature signal ● Fuel level sensor signal (resistance value) ● Malfunction indicator signal ● ABS warning lamp signal ● Low tire pressure warning signal ● Brake warning lamp signal ● AWD warning lamp signal ● Turn indicator signal ● High beam request signal ● VDC OFF indicator lamp signal ● SLIP indicator lamp signal ● ASCD CRUISE indicator lamp signal ● ASCD SET indicator lamp signal ● AWD lock indicator lamp signal ● CVT indicator lamp signal ● CVT position indicator signal ● Second position indicator signal ● Manual mode indicator signal ● Manual mode gear position signal ● CAN communication condition signal of CVT ● Door switch signal ● Oil pressure switch signal ● Position lights request signal ● Buzzer output signal

FAIL-SAFE

Solution When Communication Error Between the Unified Meter & A/C Amp. and the Combination Meter

Function		Specifications
Speedometer		Reset to zero by suspending communication.
Tachometer		
Fuel gauge		
Water temperature gauge		
Illumination control	Combination meter illumination	When suspending communication, change to nighttime mode.
Odo/trip meter		Integrate in response to 8-pulse input.
CVT indicator		The display turns off by suspending communication.
Warning buzzer		The warning buzzer turns off by suspending communication.
Warning lamp/indicator lamp	ABS warning lamp	The lamp turns on by suspending communication.
	VDC OFF indicator	
	SLIP indicator	
	Brake warning lamp	
	High beam indicator	The lamp turns off by suspending communication.
	Door warning lamp	The lamp turns off by suspending communication for 2 seconds while ignition switch is being ON.
	Low tire pressure warning lamp	
	ASCD SET indicator lamp	
	ASCD CRUISE indicator lamp	
	AWD warning lamp	
	AWD lock indicator lamp	
	Oil pressure warning lamp	
	Turn signal indicator	
	Malfunction indicator lamp	
	CVT indicator lamp	

CAN Communication System Description

AKS004GO

CAN (Controller Area Network) is a serial communication line for real time application. It is an on-vehicle multiplex communication line with high data communication speed and excellent error detection ability. Many electronic control units are equipped onto a vehicle, and each control unit shares information and links with other control units during operation (not independent). In CAN communication, control units are connected with 2 communication lines (CAN H line, CAN L line) allowing a high rate of information transmission with less wiring. Each control unit transmits/receives data but selectively reads required data only.

CAN Communication Unit For 2WD Models

AKS007PN

Body type	Wagon															
Axle	2WD															
Engine	VQ35DE															
Transmission	CVT															
Brake control	ABS								VDC							
Low tire pressure warning system		×			×	×		×		×			×	×		×
Navigation system			×		×		×	×			×		×		×	×
Automatic drive positioner				×		×	×	×				×		×	×	×
CAN communication unit																
ECM	×	×	×	×	×	×	×	×	×	×	×	×	×	×	×	×
TCM	×	×	×	×	×	×	×	×	×	×	×	×	×	×	×	×
Low tire pressure warning control unit		×			×	×		×		×			×	×		×
Display unit	×	×		×		×			×	×		×		×		
Display control unit			×		×		×	×			×		×		×	×
Data link connector	×	×	×	×	×	×	×	×	×	×	×	×	×	×	×	×
BCM	×	×	×	×	×	×	×	×	×	×	×	×	×	×	×	×
Unified meter and A/C amp.	×	×	×	×	×	×	×	×	×	×	×	×	×	×	×	×
Steering angle sensor									×	×	×	×	×	×	×	×
Driver seat control unit				×		×	×	×				×		×	×	×
ABS actuator and electric unit (control unit)	×	×	×	×	×	×	×	×	×	×	×	×	×	×	×	×
IPDM E/R	×	×	×	×	×	×	×	×	×	×	×	×	×	×	×	×
CAN communication type	DI-35, "TYPE 1/TYPE 2/TYPE 3/TYPE 4/TYPE 5/TYPE 6/TYPE 7/TYPE 8"								DI-40, "TYPE 9/TYPE10/TYPE 11/TYPE 12/TYPE 13/TYPE 14/TYPE 15/TYPE 16"							

×: Applicable

TYPE 1/TYPE 2/TYPE 3/TYPE 4/TYPE 5/TYPE 6/TYPE 7/TYPE 8

System Diagram

- Type1

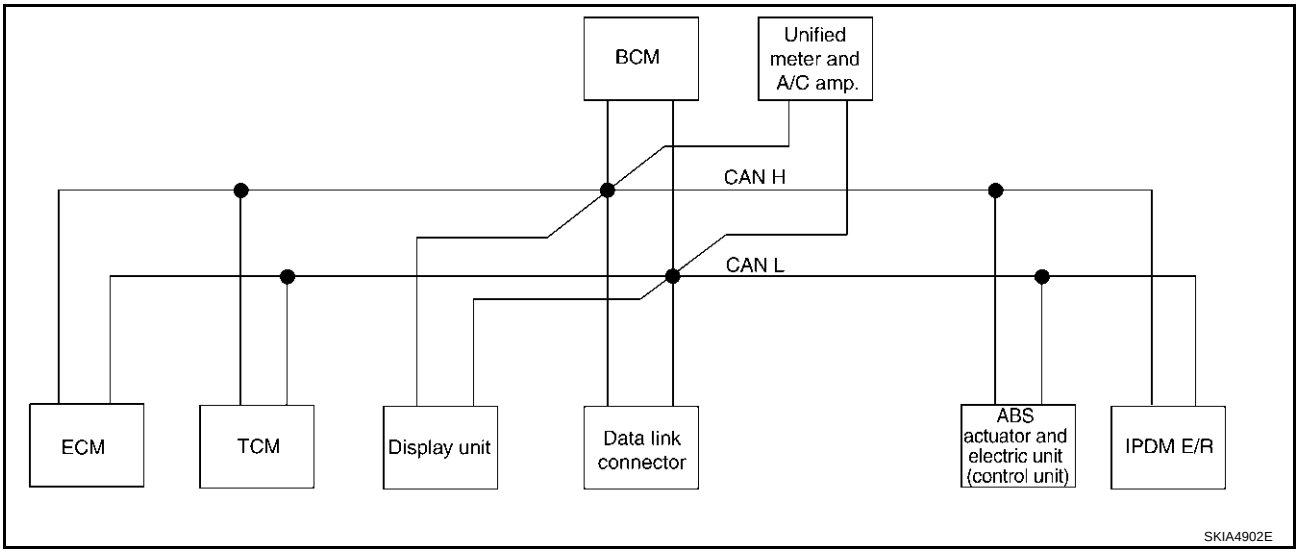

- Type2

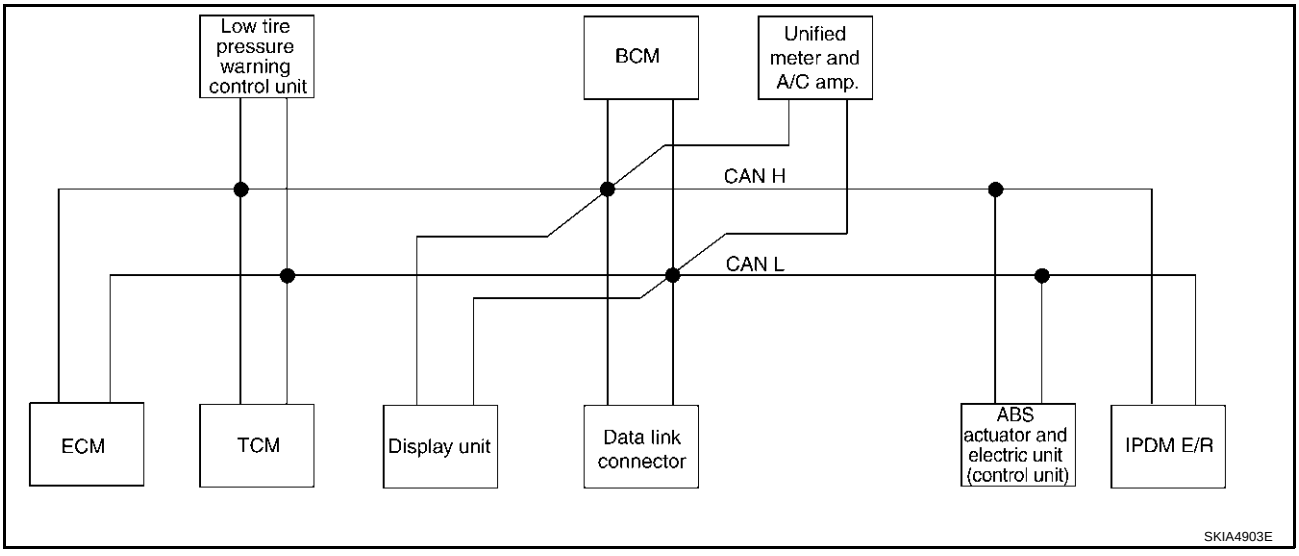

- Type3

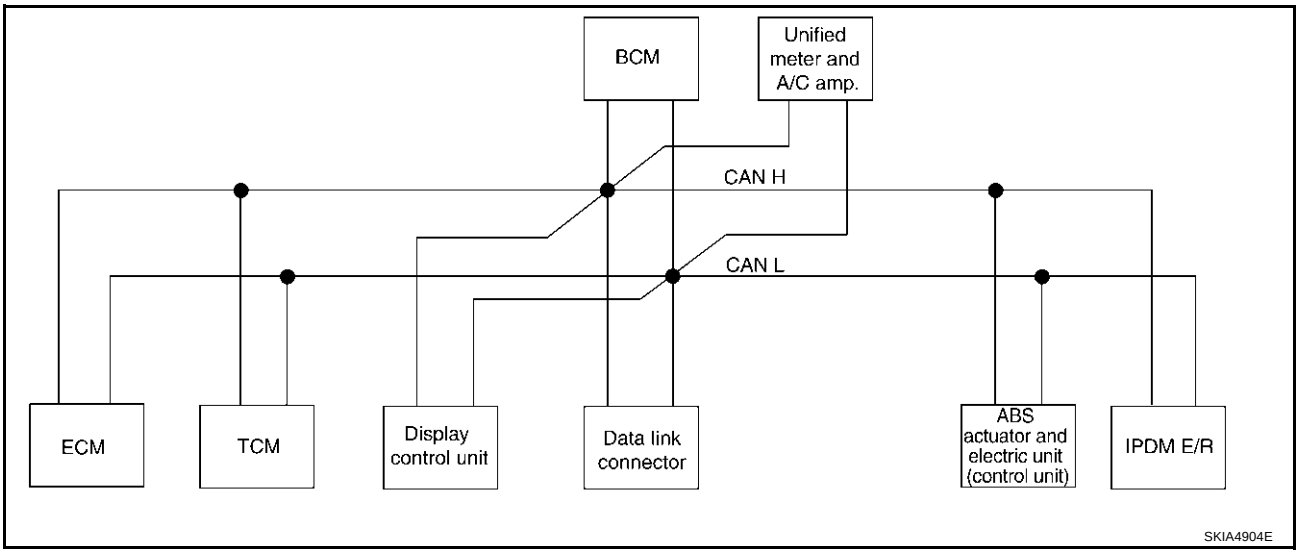

- Type4

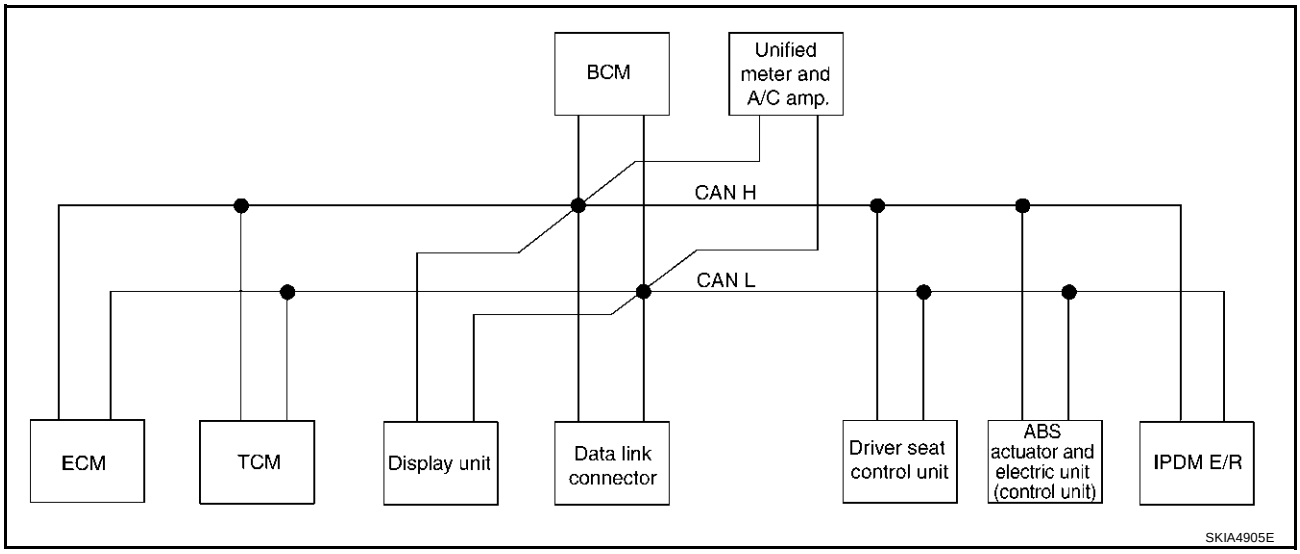

- Type5

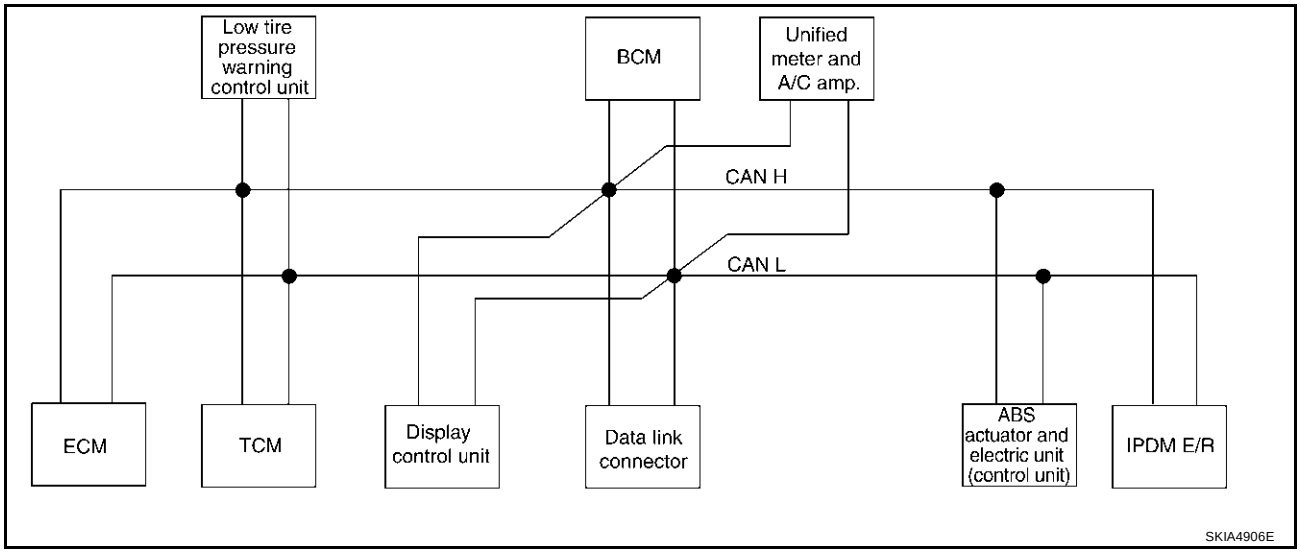

- Type6

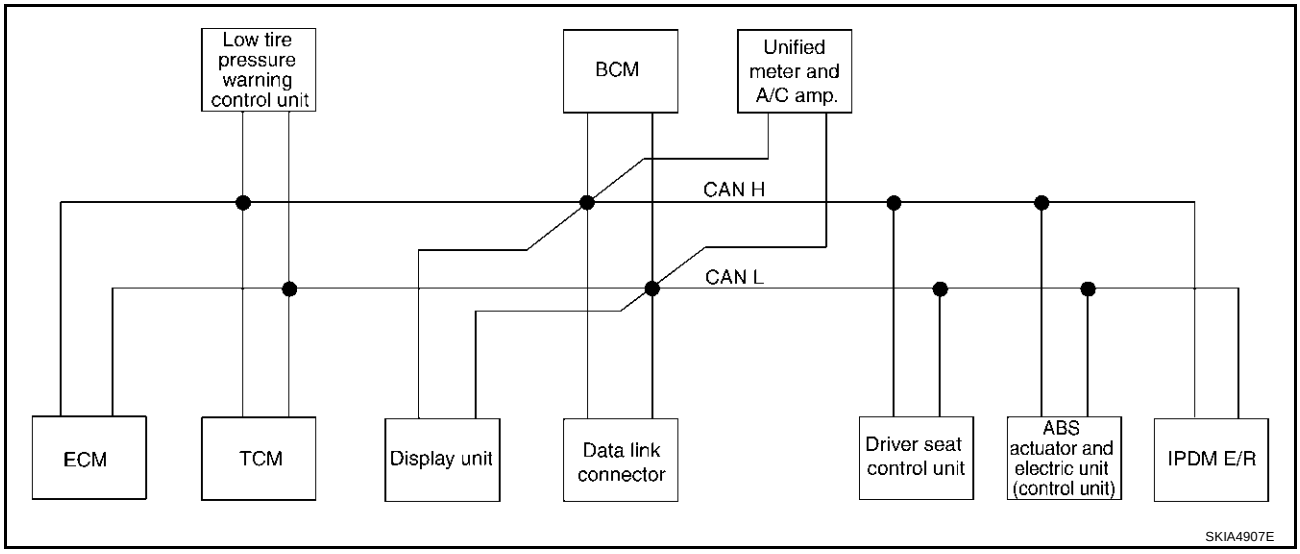

- Type7

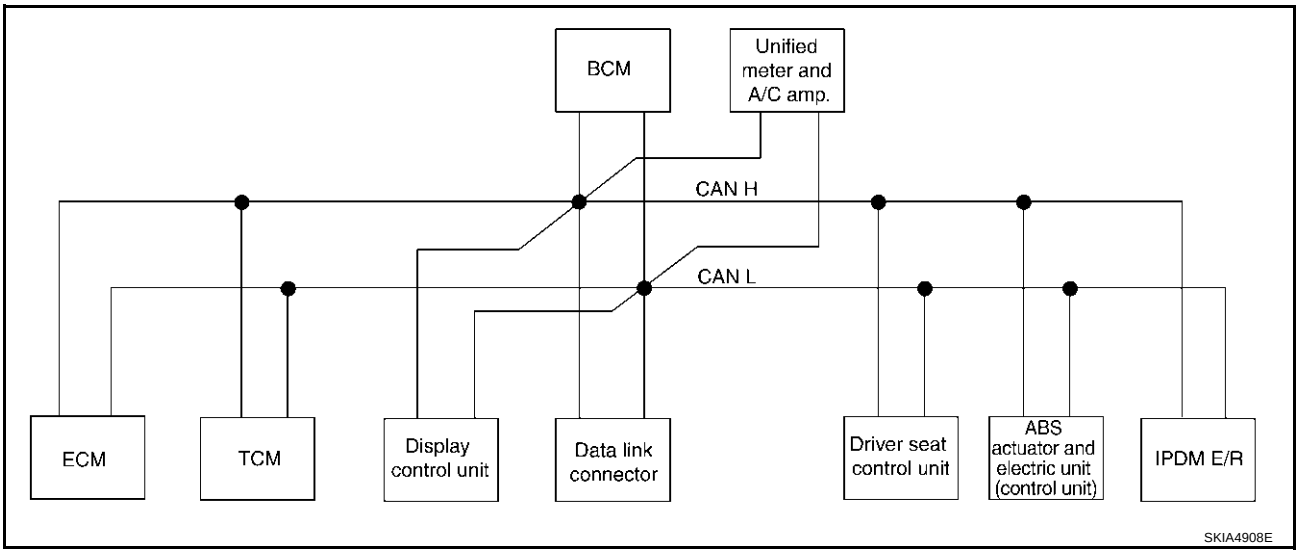
BCM
Unified meter and A/C amp.
CAN H
CAN L
ECM
TCM
Display control unit
Data link connector
Driver seat control unit
ABS actuator and electric unit (control unit)
IPDM E/R
SKIA4908E

- Type8

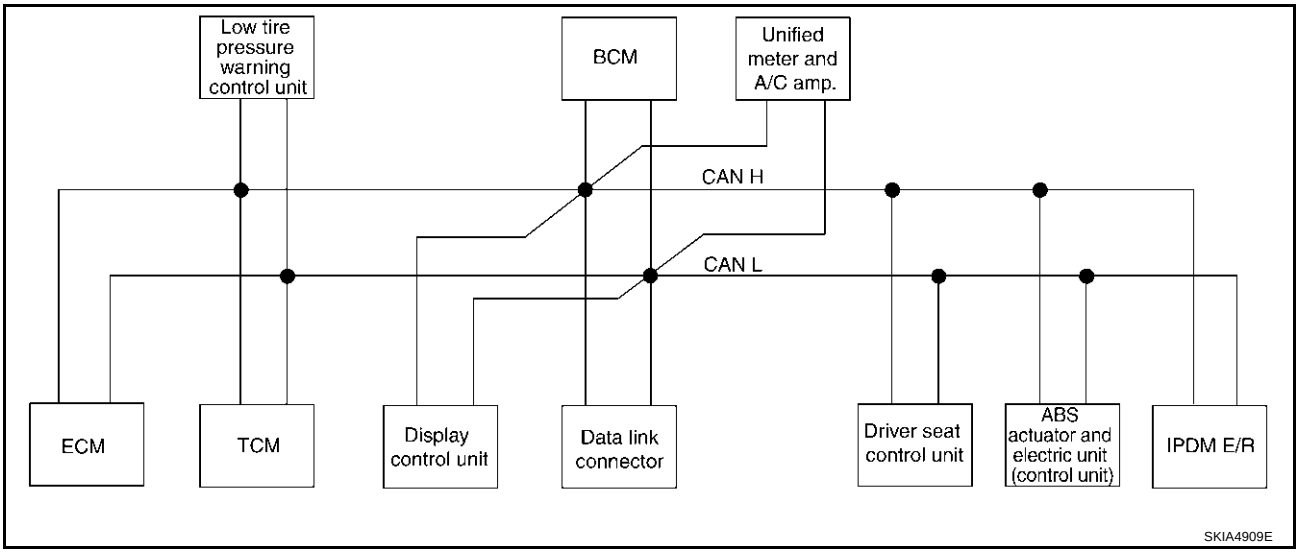
Low tire pressure warning control unit
BCM
Unified meter and A/C amp.
CAN H
CAN L
ECM
TCM
Display control unit
Data link connector
Driver seat control unit
ABS actuator and electric unit (control unit)
IPDM E/R
SKIA4909E

Input/output Signal Chart

T: Transmit R: Receive

Signals	ECM	TCM	Low tire pressure warning control unit	Display unit	Display control unit	BCM	Unified meter and A/C amp.	Driver seat control unit	ABS actuator and electric unit (control unit)	IPDM E/R
Engine speed signal	T	R			R	R	R			
Engine status signal	T					R				
Engine coolant temperature signal	T						R			
CVT position indicator signal		T					R			
Second position signal		R					T			
Second position indicator signal		T					R			
Engine and CVT integrated control signal	T	R								
	R	T								
Accelerator pedal position signal	T	R								
Closed throttle position signal	T	R								
Wide open throttle position signal	T	R								
Key switch signal						T		R		
Ignition switch signal						T		R		R
P range signal		T						R		
Stop lamp switch signal		R					T			
Fuel consumption monitor signal	T						R			
CVT self-diagnosis signal	R	T								
ABS operation signal		R							T	
Air conditioner switch signal	R					T				
A/C compressor request signal	T									R
A/C compressor feedback signal	T						R			
Blower fan motor switch signal	R					T				
A/C control signal				T	T		R			
				R	R		T			
Cooling fan speed request signal	T									R
Position lights request signal						T	R			R
Low beam request signal						T				R
Low beam status signal	R									T
High beam request signal						T	R			R
High beam status signal	R									T
Front fog lights request signal						T				R
Vehicle speed signal		R					R		T	
	R		R		R	R	T	R		
Sleep request 1 signal						T	R			
Sleep request 2 signal						T				R
Door switch signal						R	T			
				R	R	T	R	R		R
Turn indicator signal						T	R			

Signals	ECM	TCM	Low tire pressure warning control unit	Display unit	Display control unit	BCM	Unified meter and A/C amp.	Driver seat control unit	ABS actuator and electric unit (control unit)	IPDM E/R
Key fob ID signal						T		R		
Key fob door unlock signal						T		R		
Seat belt buckle switch signal						R	T			
Oil pressure switch signal						R				T
						T	R			
Buzzer output signal						T	R			
Fuel level sensor signal	R						T			
Fuel level low warning signal				R	R		T			
Malfunction indicator lamp signal	T						R			
ASCD SET lamp signal	T						R			
ASCD CRUISE lamp signal	T						R			
Input shaft revolution signal	R	T								
Output shaft revolution signal	R	T								
Front wiper request signal						T				R
Front wiper stop position signal						R				T
Rear window defogger switch signal						T				R
Rear window defogger control signal	R			R	R					T
Hood switch signal						R				T
Theft warning horn request signal						T				R
Horn chirp signal						T				R
Tire pressure signal			T				R			
Tire pressure data signal			T	R	R					
ABS warning lamp signal							R		T	
Brake warning lamp signal							R		T	
System setting signal				T	T			R		
Parking brake switch signal						R	T			

TYPE 9/TYPE10/TYPE 11/TYPE 12/TYPE 13/TYPE 14/TYPE 15/TYPE 16

System Diagram

- Type9

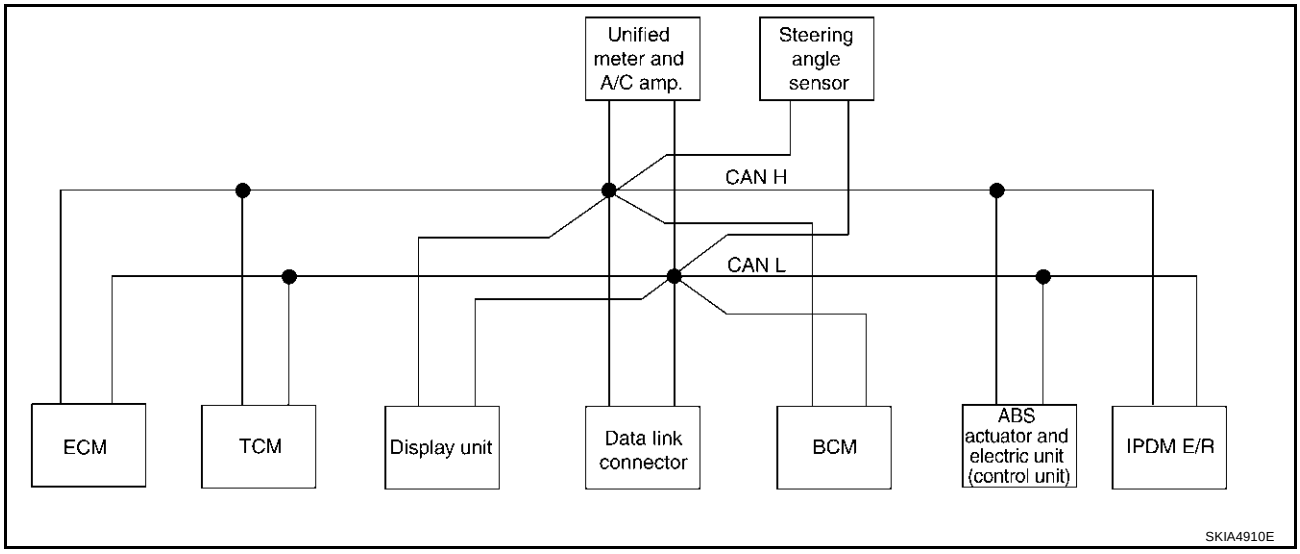

- Type10

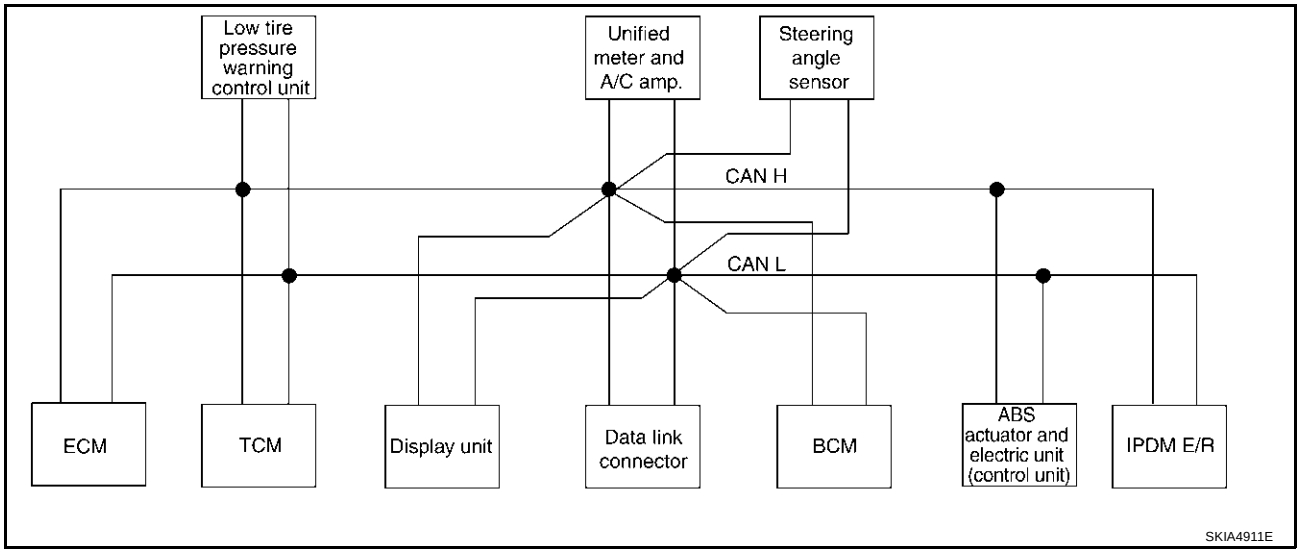

- Type11

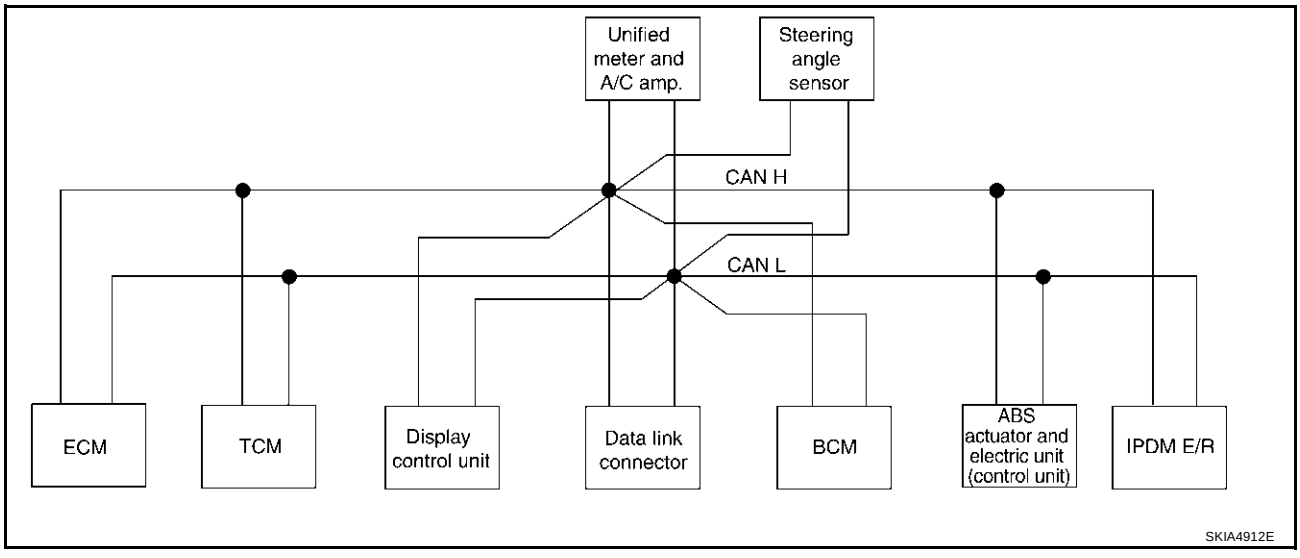

- Type12

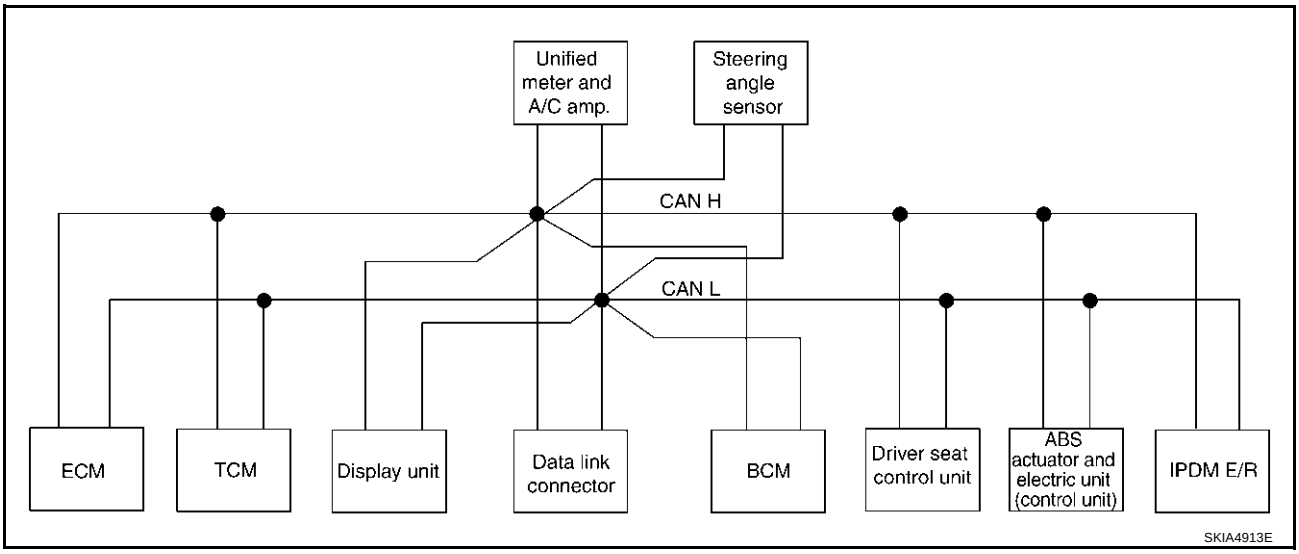

- Type13

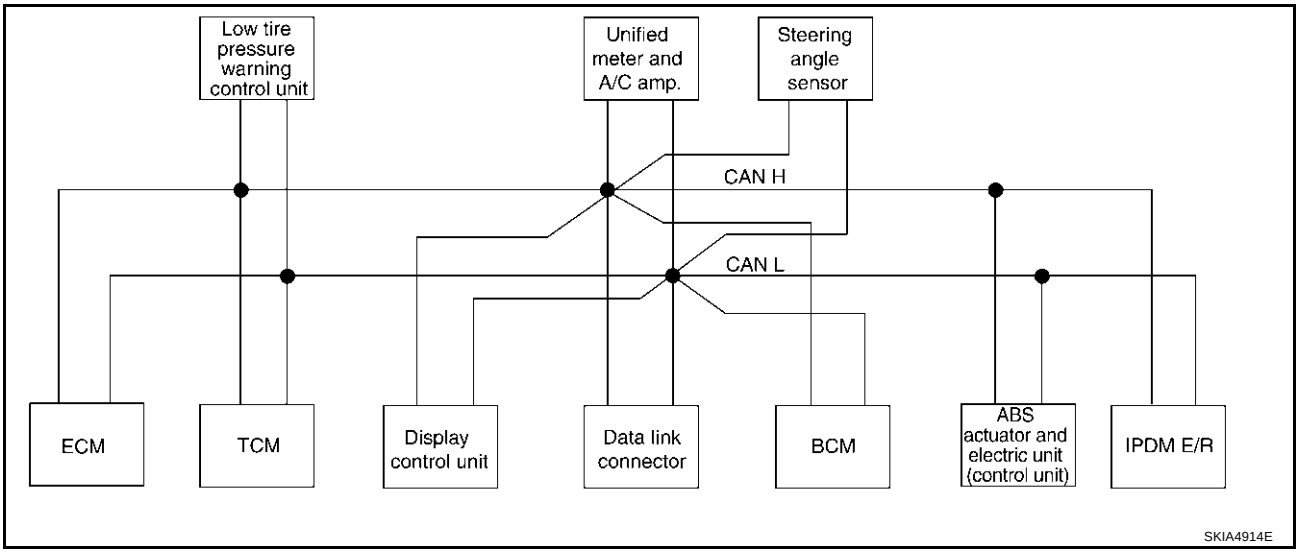

- Type14

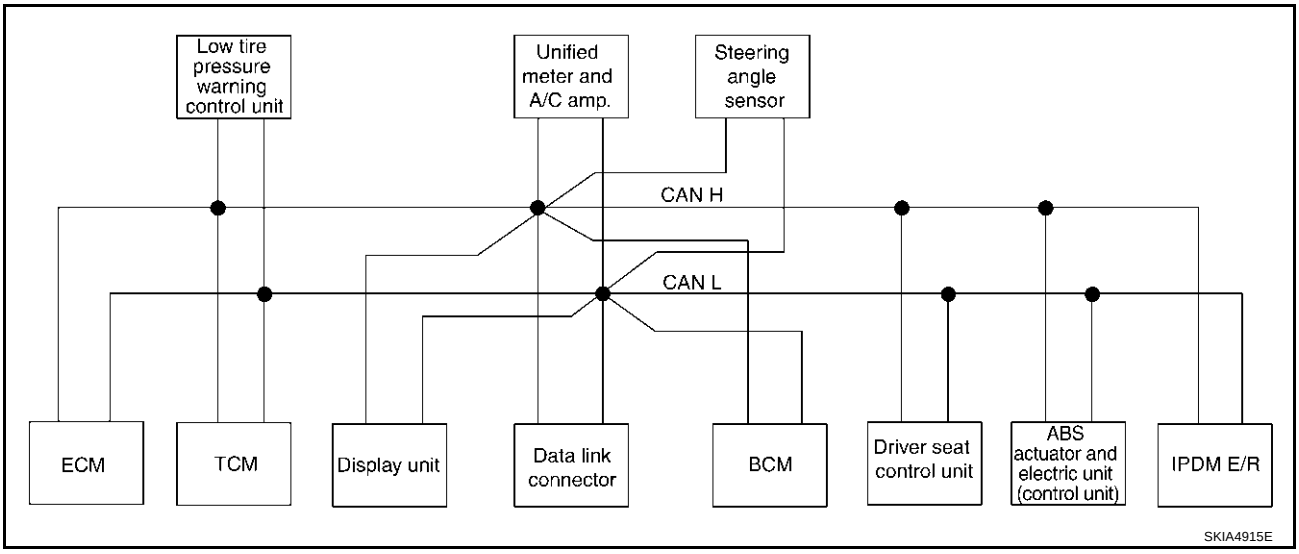

- Type15

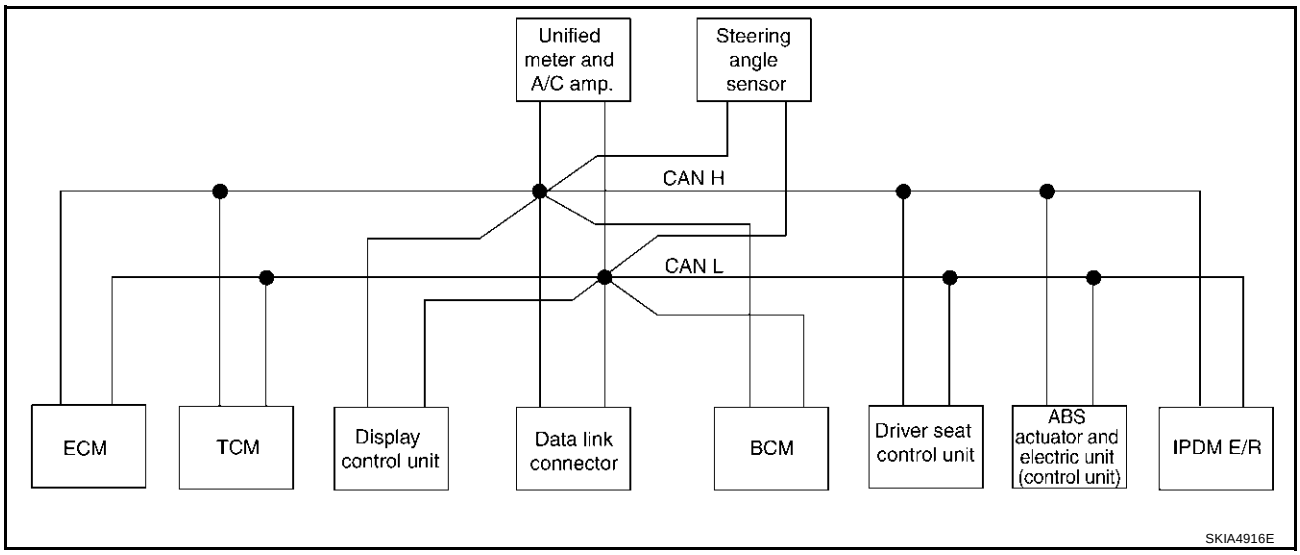

- Type16

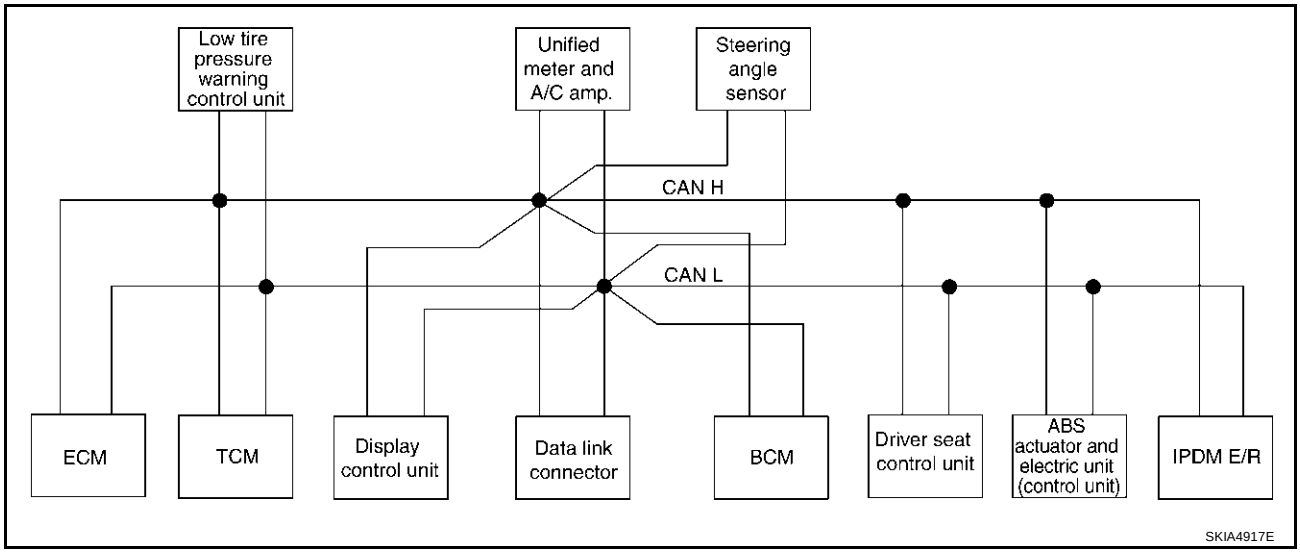

Input/output Signal Chart

T: Transmit R: Receive

Signals	ECM	TCM	Low tire pressure warning control unit	Display unit	Display control unit	BCM	Unified meter and A/C amp.	Steering angle sensor	Driver seat control unit	ABS actuator and electric unit (control unit)	IPDM E/R
Engine speed signal	T	R			R	R	R			R	
Engine status signal	T					R					
Engine coolant temperature signal	T						R				
Engine and CVT integrated control signal	T	R									
	R	T									
Accelerator pedal position signal	T	R								R	
Closed throttle position signal	T	R									
Wide open throttle position signal	T	R									
Key switch signal						T			R		
Ignition switch signal						T			R		R
P range signal		T							R	R	
Stop lamp switch signal		R					T				
VDC operation signal		R								T	
Second position indicator signal		T					R			R	
Second position signal		R					T				
Fuel consumption monitor signal	T						R				
CVT self-diagnosis signal	R	T									
Input shaft revolution signal	R	T								R	
Output shaft revolution signal	R	T								R	
Air conditioner switch signal	R					T					
A/C compressor request signal	T										R
A/C compressor feedback signal	T						R				
Blower fan motor switch signal	R					T					
A/C control signal				T	T		R				
				R	R		T				
Cooling fan speed request signal	T										R
Position lights request signal						T	R				R
Low beam request signal						T					R
Low beam status signal	R										T
High beam request signal						T	R				R
High beam status signal	R										T
Front fog lights request signal						T					R
Vehicle speed signal		R					R			T	
	R		R		R	R	T		R		
Sleep request 1 signal						T	R				
Sleep request 2 signal						T					R

Signals	ECM	TCM	Low tire pressure warning control unit	Display unit	Display control unit	BCM	Unified meter and A/C amp.	Steering angle sensor	Driver seat control unit	ABS actuator and electric unit (control unit)	IPDM E/R
Door switch signal						R	T				
				R	R	T	R		R		R
Turn indicator signal						T	R				
Key fob ID signal						T			R		
Key fob door unlock signal						T			R		
Seat belt buckle switch signal						R	T				
Oil pressure switch signal						R					T
						T	R				
Buzzer output signal						T	R				
Fuel level sensor signal	R						T				
Fuel level low warning signal				R	R		T				
Malfunction indicator signal	T						R				
ASCD SET lamp signal	T						R				
ASCD CRUISE lamp signal	T						R				
Front wiper request signal						T					R
Front wiper stop position signal						R					T
Rear window defogger switch signal						T					R
Rear window defogger control signal	R			R	R						T
Hood switch signal						R					T
Theft warning horn request signal						T					R
Horn chirp signal						T					R
Steering angle sensor signal								T		R	
Tire pressure signal			T				R				
Tire pressure data signal			T	R	R						
CVT position indicator signal		T					R			R	
ABS warning lamp signal							R			T	
VDC OFF indicator lamp signal							R			T	
SLIP indicator lamp signal							R			T	
Brake warning lamp signal							R			T	
System setting signal				T	T				R		
Parking brake switch signal						R	T				

CAN Communication Unit For AWD Models

AKS007PO

Body type	Wagon															
Axle	AWD															
Engine	VQ35DE															
Transmission	CVT															
Brake control	ABS								VDC							
Low tire pressure warning system		×			×	×		×		×			×	×		×
Navigation system			×		×		×	×			×		×		×	×
Automatic drive positioner				×		×	×	×				×		×	×	×
CAN communication unit																
ECM	×	×	×	×	×	×	×	×	×	×	×	×	×	×	×	×
TCM	×	×	×	×	×	×	×	×	×	×	×	×	×	×	×	×
Low tire pressure warning control unit		×			×	×		×		×			×	×		×
Display unit	×	×		×		×			×	×		×		×		
Display control unit			×		×		×	×			×		×		×	×
Data link connector	×	×	×	×	×	×	×	×	×	×	×	×	×	×	×	×
BCM	×	×	×	×	×	×	×	×	×	×	×	×	×	×	×	×
Unified meter and A/C amp.	×	×	×	×	×	×	×	×	×	×	×	×	×	×	×	×
Steering angle sensor									×	×	×	×	×	×	×	×
Driver seat control unit				×		×	×	×				×		×	×	×
AWD control unit	×	×	×	×	×	×	×	×	×	×	×	×	×	×	×	×
ABS actuator and electric unit (control unit)	×	×	×	×	×	×	×	×	×	×	×	×	×	×	×	×
IPDM E/R	×	×	×	×	×	×	×	×	×	×	×	×	×	×	×	×
CAN communication type	DI-45, "TYPE 17/TYPE 18/TYPE 19/TYPE 20/ TYPE 21/TYPE 22/TYPE 23/TYPE 24"								DI-51, "TYPE 25/TYPE26/TYPE 27/TYPE 28/ TYPE 29/TYPE 30/TYPE 31/TYPE 32"							

×: Applicable

TYPE 17/TYPE 18/TYPE 19/TYPE 20/TYPE 21/TYPE 22/TYPE 23/TYPE 24

System Diagram

- Type17

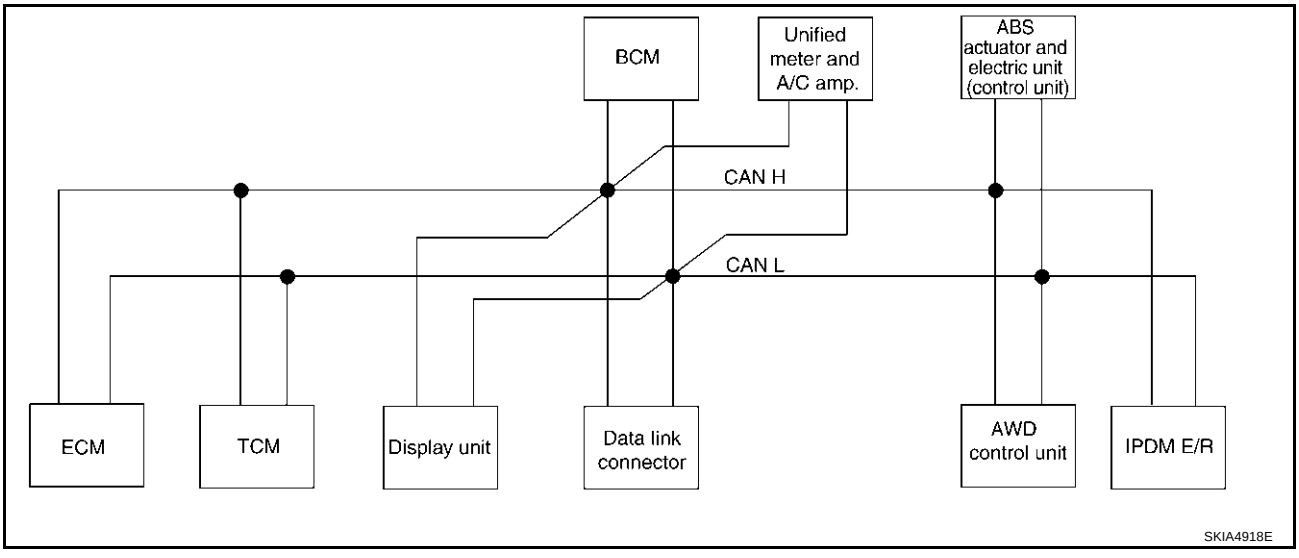

- Type18

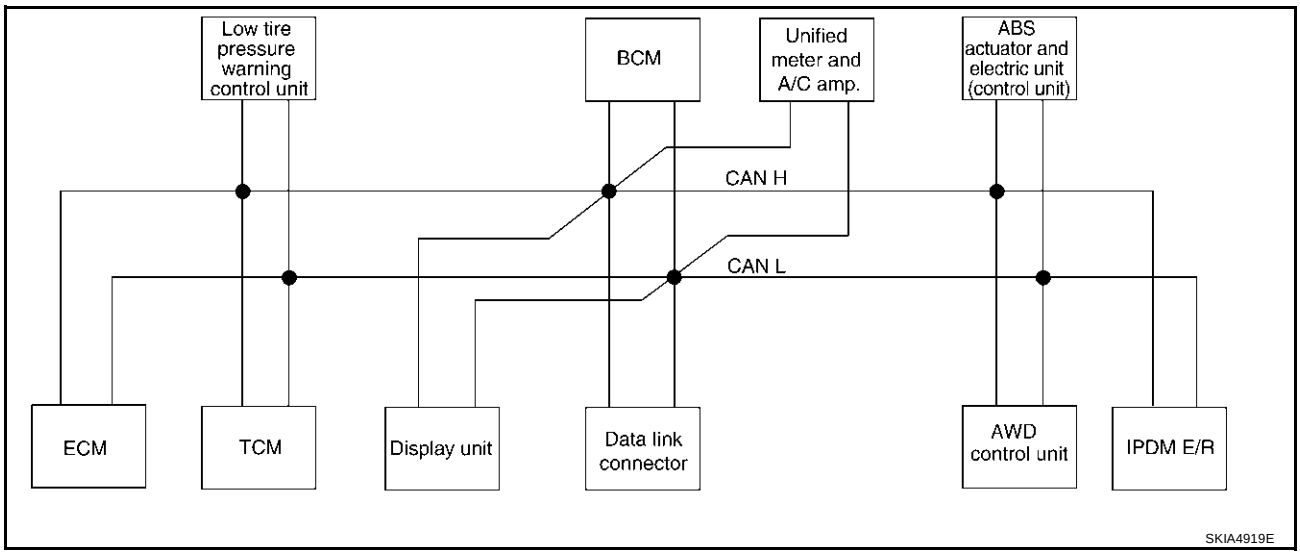

- Type19

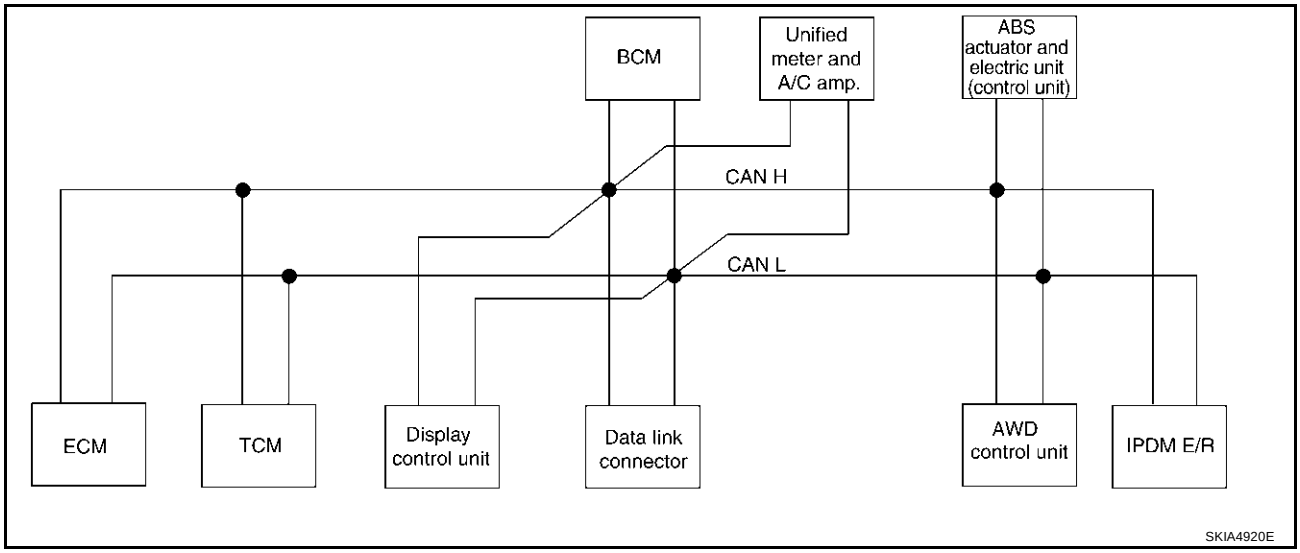

- Type20

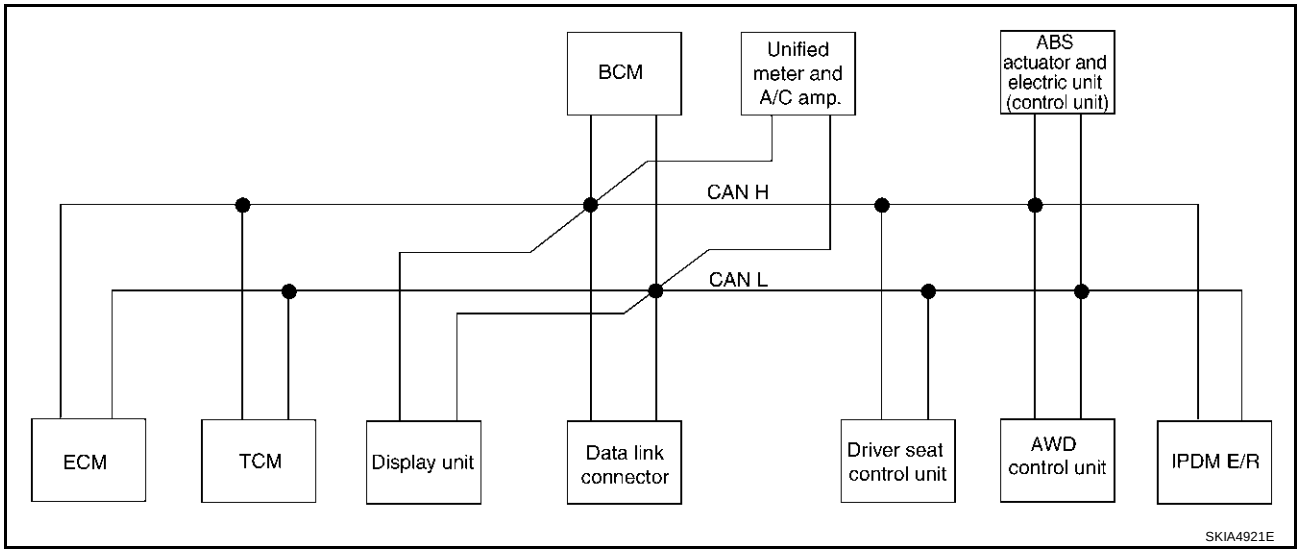

- Type21

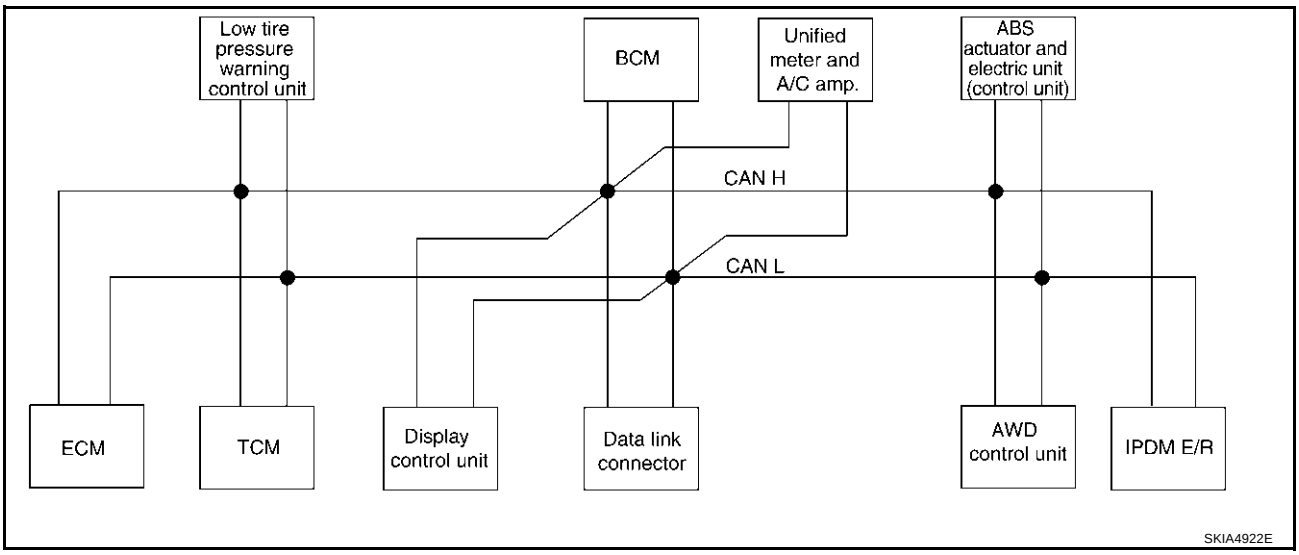

- Type22

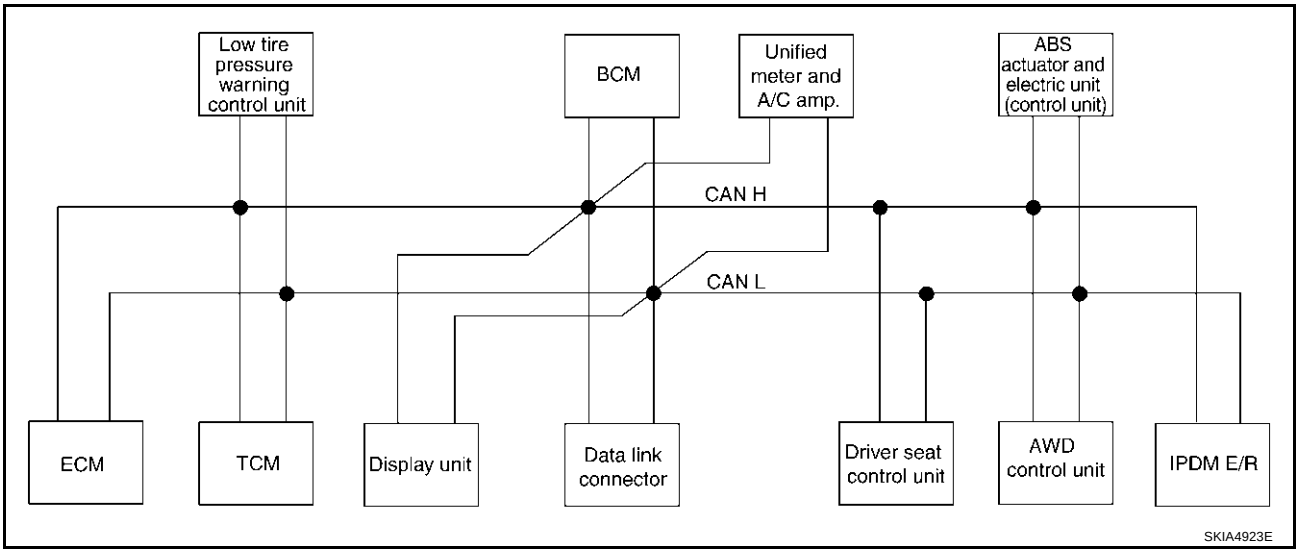

- Type23

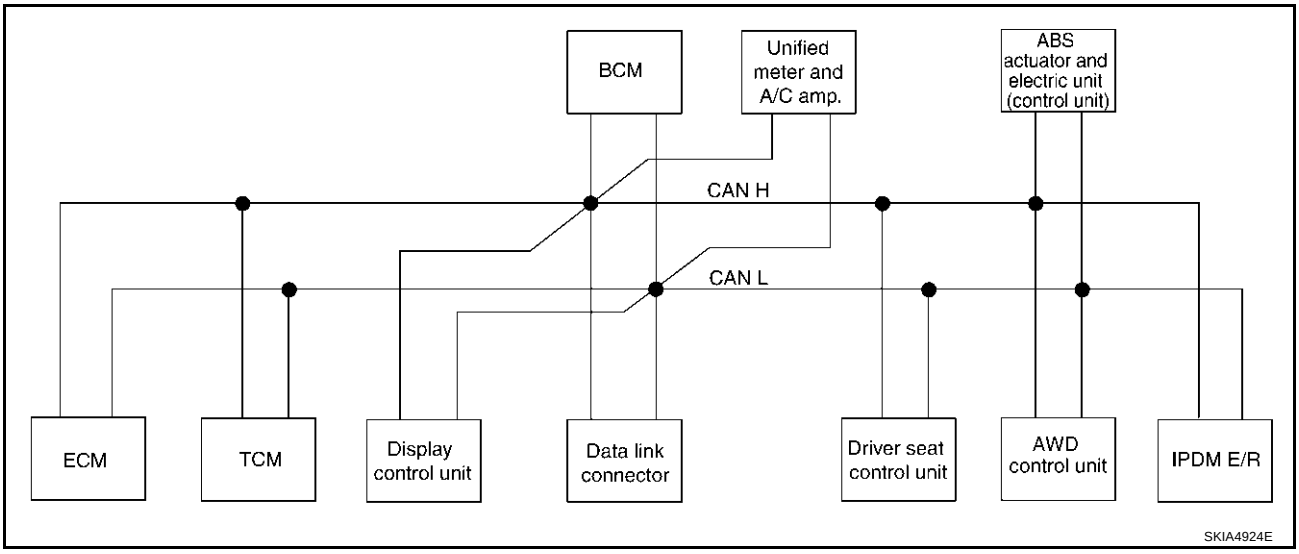

- Type24

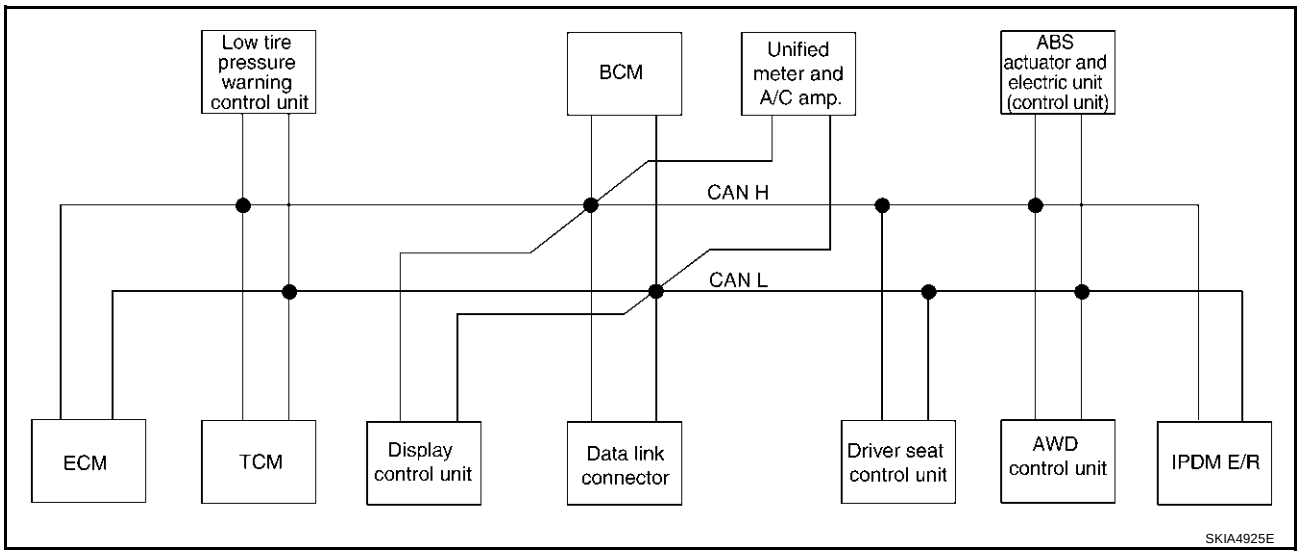
Low tire pressure warning control unit
BCM
Unified meter and A/C amp.
ABS actuator and electric unit (control unit)
CAN H
CAN L
ECM
TCM
Display control unit
Data link connector
Driver seat control unit
AWD control unit
IPDM E/R
SKIA4925E

Input/output signal chart

T: Transmit R: Receive

Signals	ECM	TCM	Low tire pressure warning control unit	Display unit	Display control unit	BCM	Unified meter and A/C amp.	Driver seat control unit	AWD control unit	ABS actuator and electric unit (control unit)	IPDM E/R
CVT position indicator signal		T					R				
Second position signal		R					T				
Second position indicator signal		T					R				
Engine speed signal	T	R	R		R	R	R		R		
Engine status signal	T					R					
Engine coolant temperature signal	T						R				
Accelerator pedal position signal	T	R							R		
Closed throttle position signal	T	R									
Wide open throttle position signal	T	R									
Key switch signal						T		R			
Ignition switch signal						T		R			R
P range signal		T						R			
Stop lamp switch signal		R					T		R		
Fuel consumption monitor signal	T						R				
CVT self-diagnosis signal	R	T									
ABS operation signal		R							R	T	
Air conditioner switch signal	R					T					
A/C compressor request signal	T										R
A/C compressor feedback signal	T						R				
Blower fan motor switch signal	R					T					
A/C control signal				T	T		R				
				R	R		T				
Cooling fan speed request signal	T										R
Position lights request signal						T	R				R
Low beam request signal						T					R
Low beam status signal	R										T
High beam request signal						T	R				R
High beam status signal	R										T
Front fog lights request signal						T					R
Vehicle speed signal		R					R		R	T	
	R		R		R	R	T	R			
Sleep request 1 signal						T	R				
Sleep request 2 signal						T					R
Door switch signal						R	T				
				R	R	T	R	R			R
Key fob ID signal						T		R			
Key fob door unlock signal						T		R			

Signals	ECM	TCM	Low tire pressure warning control unit	Display unit	Display control unit	BCM	Unified meter and A/C amp.	Driver seat control unit	AWD control unit	ABS actuator and electric unit (control unit)	IPDM E/R
Turn indicator signal						T	R				
Seat belt buckle switch signal						R	T				
Oil pressure switch signal						R					T
						T	R				
Buzzer output signal						T	R				
Fuel level sensor signal	R						T				
Fuel level low warning signal				R	R		T				
Malfunction indicator lamp signal	T						R				
ASCD SET lamp signal	T						R				
ASCD CRUISE lamp signal	T						R				
Input shaft revolution signal	R	T									
Output shaft revolution signal	R	T									
Front wiper request signal						T					R
Front wiper stop position signal						R					T
Rear window defogger switch signal						T					R
Rear window defogger control signal	R			R	R						T
Engine and CVT integrated control signal	T	R									
	R	T									
Hood switch signal						R					T
Theft warning horn request signal						T					R
Horn chirp signal						T					R
Tire pressure signal			T				R				
Tire pressure data signal			T	R	R						
ABS warning lamp signal							R			T	
Brake warning lamp signal							R			T	
System setting signal				T	T			R			
AWD warning lamp signal							R		T		
AWD lock indicator lamp signal							R		T		
AWD lock switch signal							T		R		
Parking brake switch signal						R	T		R		

TYPE 25/TYPE26/TYPE 27/TYPE 28/TYPE 29/TYPE 30/TYPE 31/TYPE 32

System Diagram

- Type25

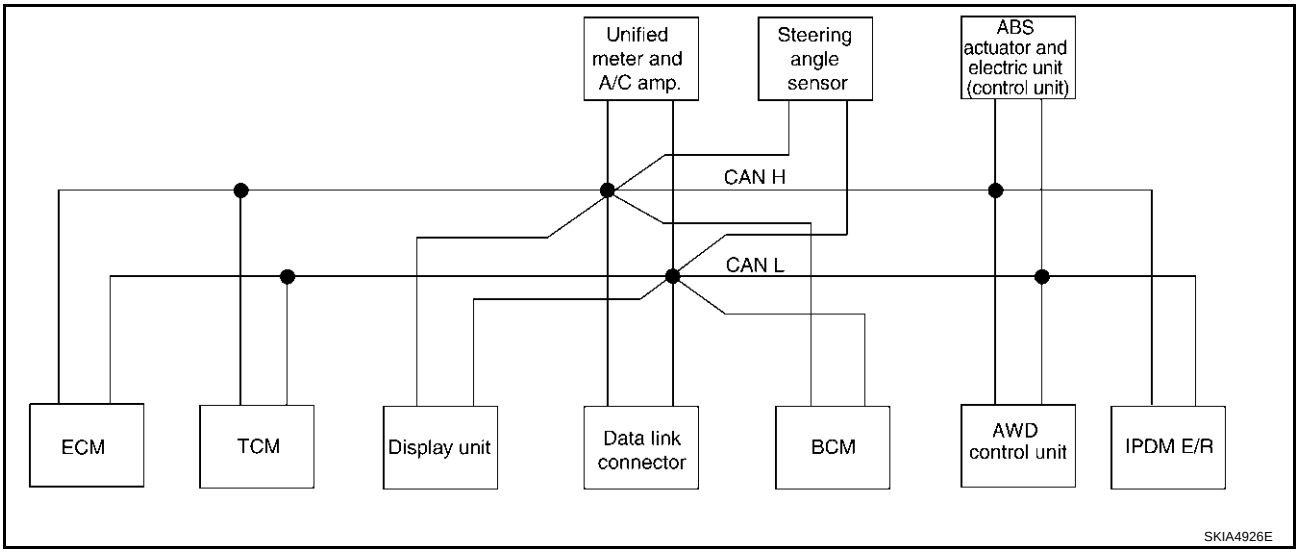

- Type26

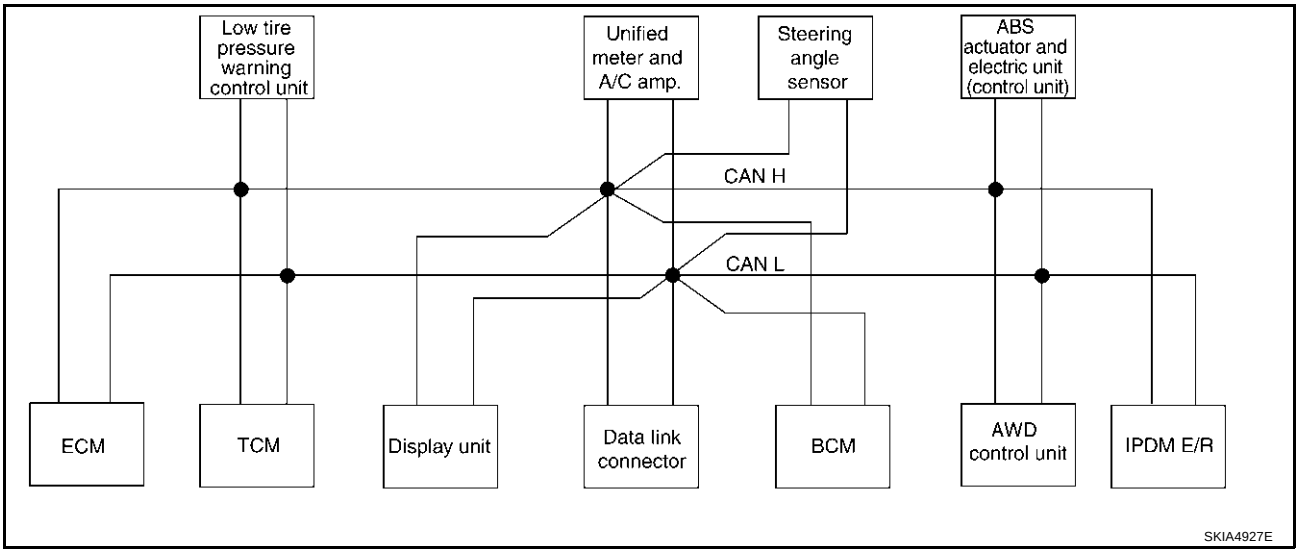

- Type27

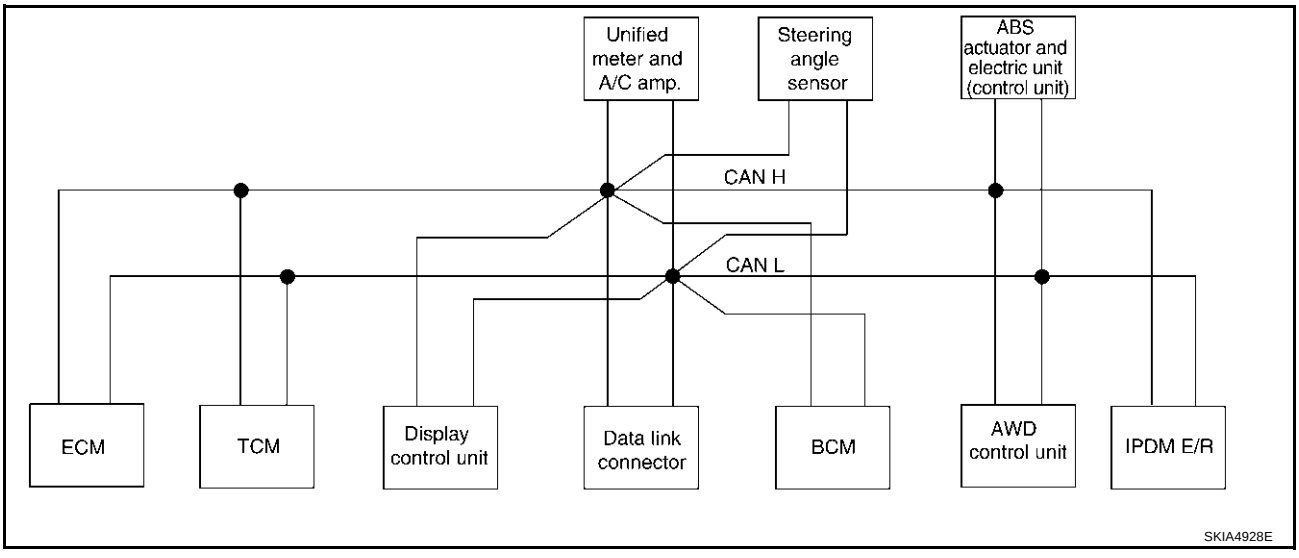

- Type28

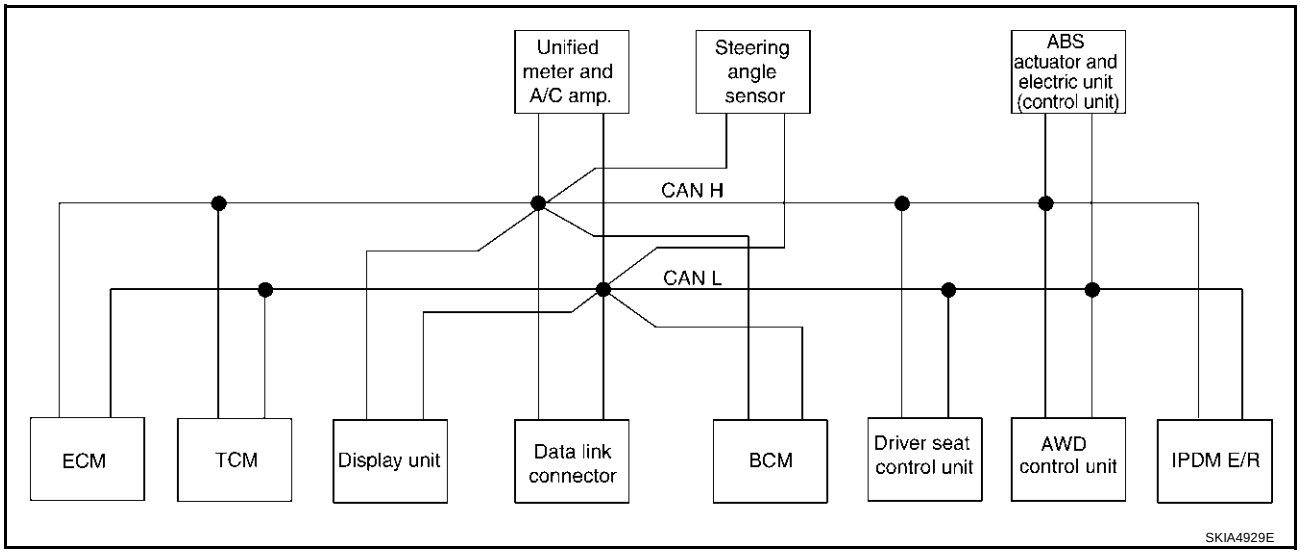

- Type29

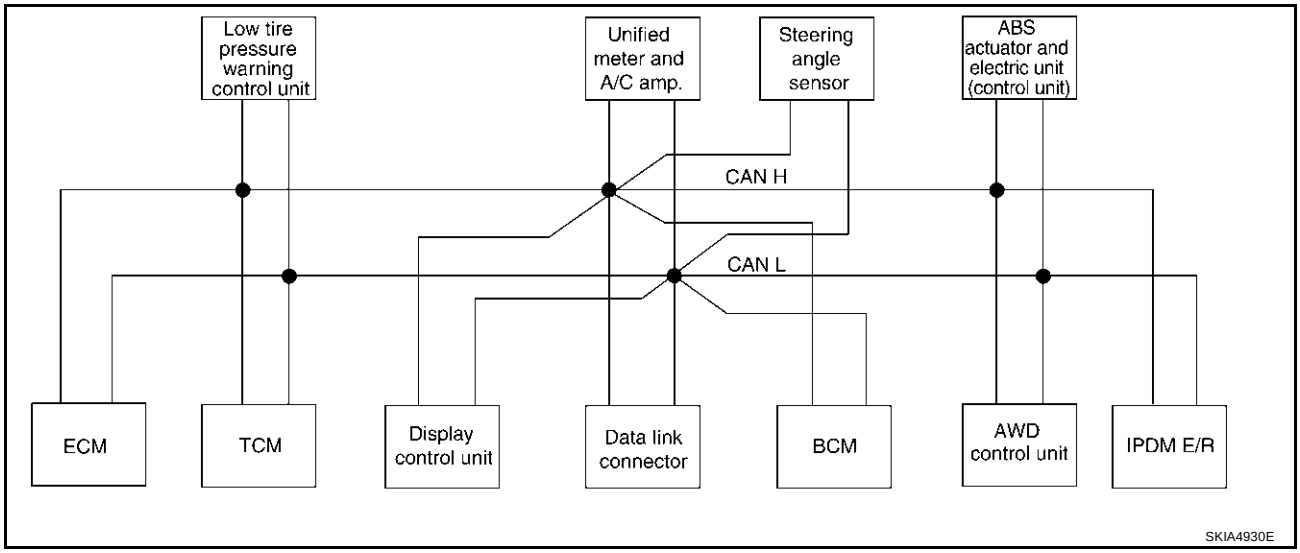

- Type30

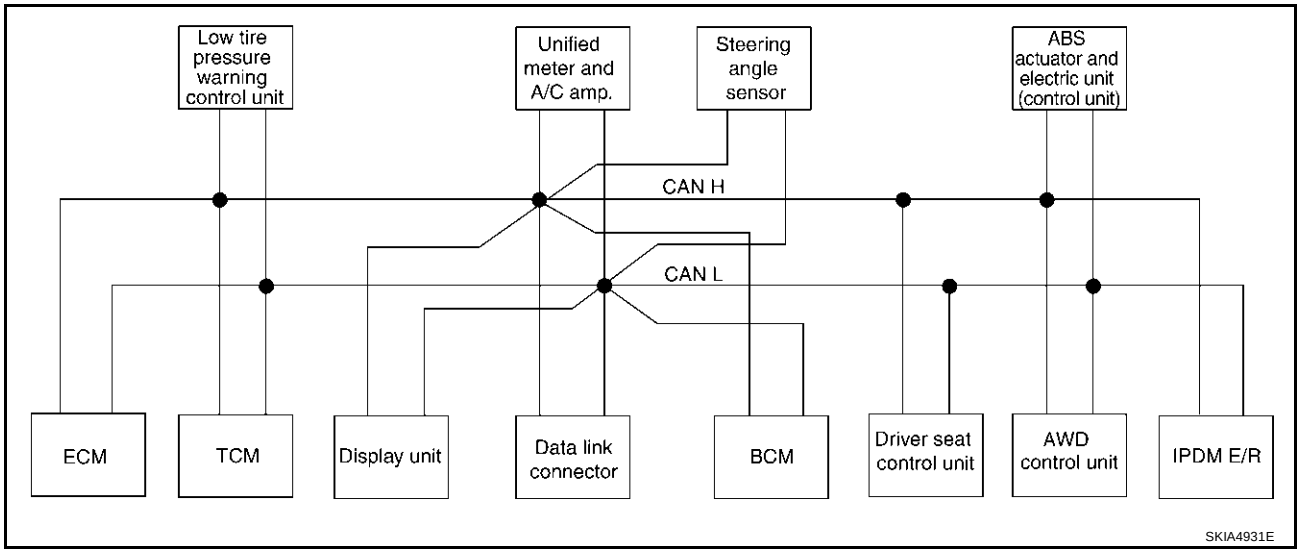

- Type31

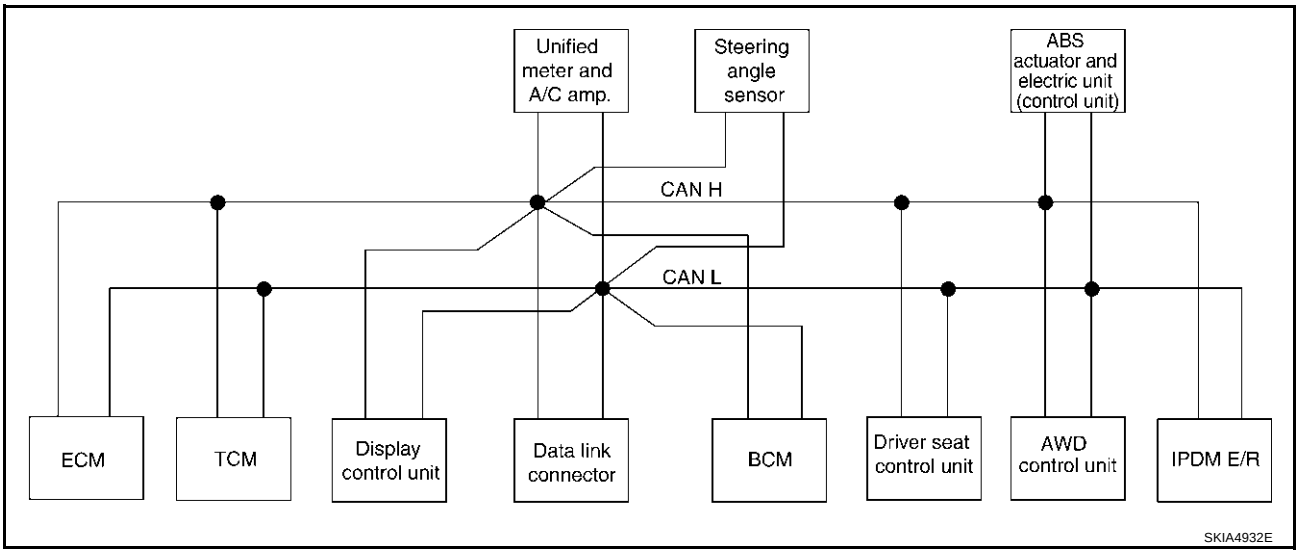

- Type32

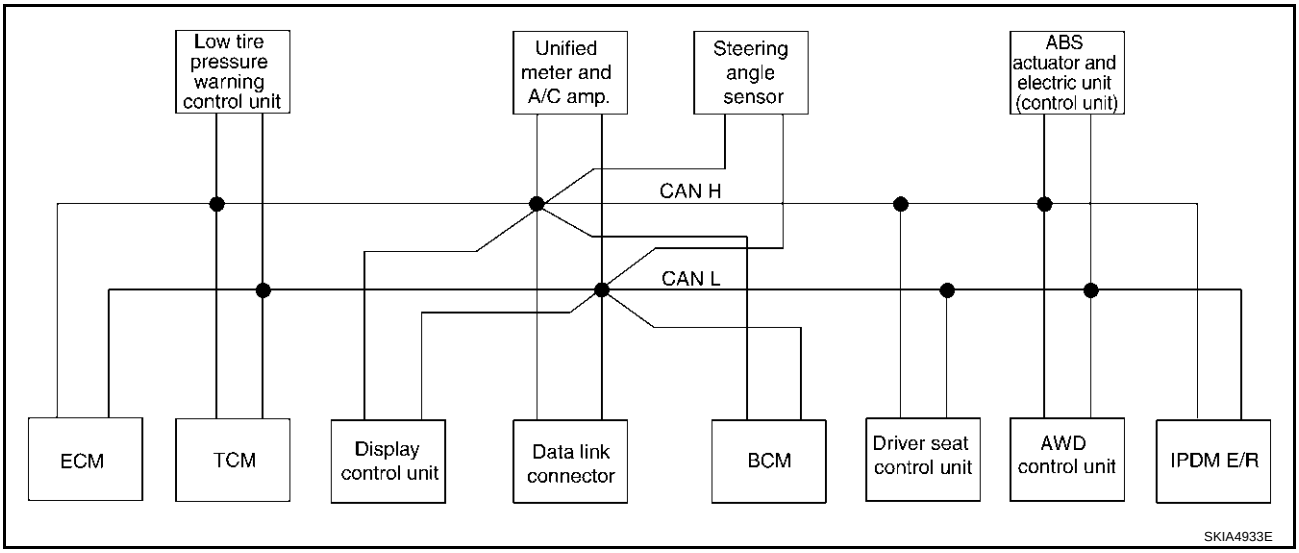

Input/output Signal Chart

T: Transmit R: Receive

Signals	ECM	TCM	Low tire pressure warning control unit	Display unit	Display control unit	BCM	Unified meter and A/C amp.	Steering angle sensor	Driver seat control unit	AWD control unit	ABS actuator and electric unit (control unit)	IPDM E/R
Engine and CVT integrated control signal	T	R										
	R	T										
Second position signal		R					T					
VDC operation signal		R								R	T	
Stop lamp switch signal		R					T			R		
Key switch signal						T			R			
Ignition switch signal						T			R			R
P range signal		T							R		R	
Closed throttle position signal	T	R										
Wide open throttle position signal	T	R										
Second position indicator signal		T					R				R	
Engine speed signal	T	R			R	R	R			R	R	
Engine status signal	T					R						
Engine coolant temperature signal	T						R					
Accelerator pedal position signal	T	R								R	R	
Fuel consumption monitor signal	T						R					
CVT self-diagnosis signal	R	T										
Input shaft revolution signal	R	T									R	
Output shaft revolution signal	R	T									R	
Air conditioner switch signal	R					T						
A/C compressor request signal	T											R
A/C compressor feedback signal	T						R					T
Blower fan motor switch signal	R					T						
A/C control signal				T	T		R					
				R	R		T					
Cooling fan speed request signal	T											R
Position lights request signal						T	R					R
Low beam request signal						T						R
Low beam status signal	R											T
High beam request signal						T	R					R
High beam status signal	R											T
Front fog lights request signal						T						R
Vehicle speed signal		R					R			R	T	
	R		R		R	R	T		R			
Sleep request 1 signal						T	R					
Sleep request 2 signal						T						R

Signals	ECM	TCM	Low tire pressure warning control unit	Display unit	Display control unit	BCM	Unified meter and A/C amp.	Steering angle sensor	Driver seat control unit	AWD control unit	ABS actuator and electric unit (control unit)	IPDM E/R
Door switch signal						R	T					
				R	R	T	R		R			R
Turn indicator signal						T	R					
Key fob ID signal						T			R			
Key fob door unlock signal						T			R			
Seat belt buckle switch signal						R	T					
Oil pressure switch signal						R						T
						T	R					
Buzzer output signal						T	R					
Fuel level sensor signal	R						T					
Fuel level low warning signal				R	R		T					
Malfunction indicator signal	T						R					
ASCD SET lamp signal	T						R					
ASCD CRUISE lamp signal	T						R					
Front wiper request signal						T						R
Front wiper stop position signal						R						T
Rear window defogger switch signal						T						R
Rear window defogger control signal	R			R	R							T
Hood switch signal						R						T
Theft warning horn request signal						T						R
Horn chirp signal						T						R
Steering angle sensor signal								T			R	
Tire pressure signal			T				R					
Tire pressure data signal			T	R	R							
CVT position indicator signal		T					R				R	
ABS warning lamp signal							R				T	
VDC OFF indicator lamp signal							R				T	
SLIP indicator lamp signal							R				T	
Brake warning lamp signal							R				T	
System setting signal				T	T				R			
AWD warning lamp signal							R			T		
AWD lock indicator lamp signal							R			T		
AWD lock switch signal							T			R		
Parking brake switch signal						R	T			R		

Schematic

AKS005L0

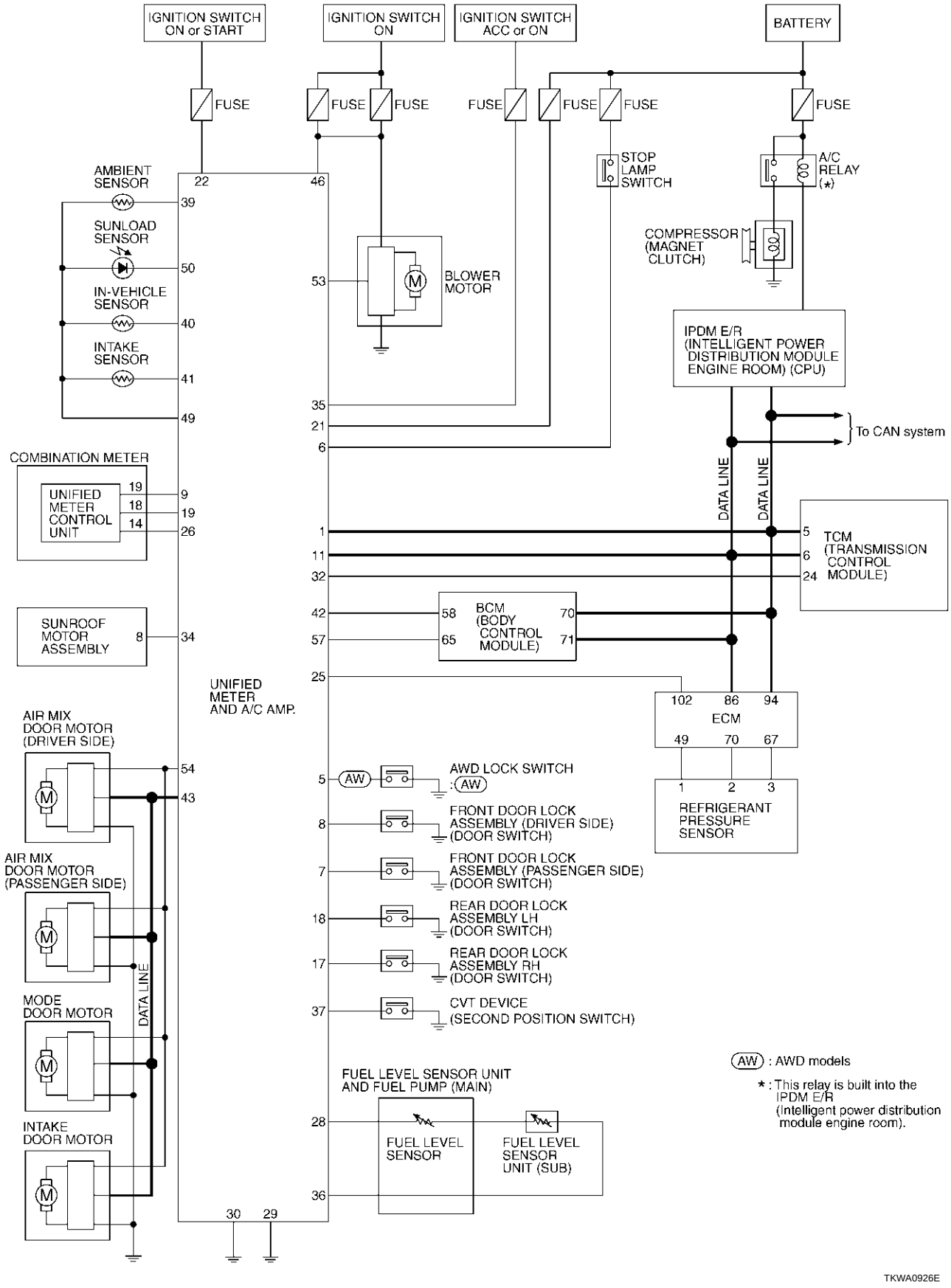

CONSULT-II Function

AKS004GR

CONSULT-II executes the following functions by combining data reception and command transmission via the communication line from unified meter and A/C amp. Self-diagnostic results and data monitor display.

System part	Check item, diagnosis mode	Description
METER A/C AMP	Self-diagnostic results	Unified meter and A/C amp. check the conditions and indicates any error that unified meter and A/C amp. memorized.
	CAN diagnostic support monitor	The results of transmit/receive diagnosis of CAN communication can be read.
	Data monitor	Displays unified meter and A/C amp. input data in real time.

CONSULT-II BASIC OPERATION

CAUTION:

If CONSULT-II is used with no connection of CONSULT-II CONVERTER, malfunctions might be detected in self-diagnosis depending on control unit which carry out CAN communication.

1. With the ignition switch OFF, connect “CONSULT-II” and “CONSULT-II CONVERTER” to the data link connector, then turn ignition switch ON.

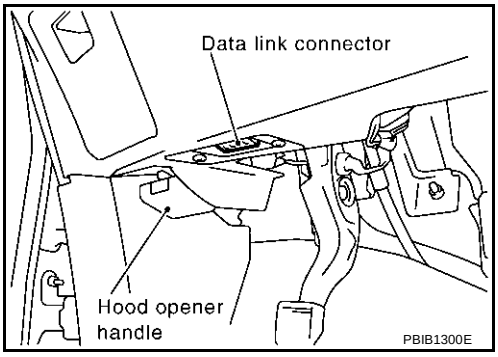

2. Touch “START (NISSAN BASED VHCL)”.

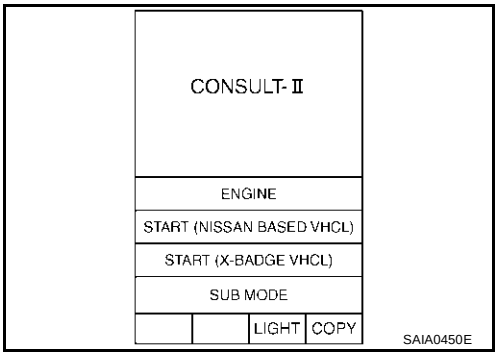

3. Touch “METER A/C AMP” on “SELECT SYSTEM” screen. If “METER A/C AMP” is not indicated, go to GI-38, "CONSULT-II Data Link Connector (DLC) Circuit" .
4. Select “SELF-DIAG RESULTS”, “CAN DIAG SUPPORT MNTR” or “DATA MONITOR”.

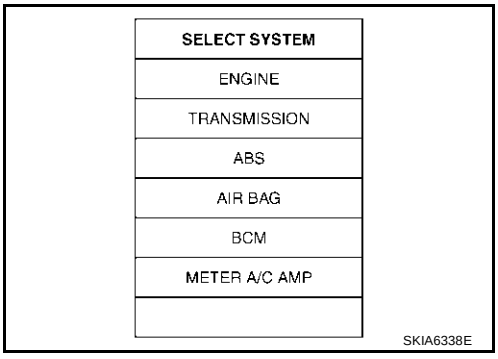

SELF-DIAGNOSTIC RESULTS

Operation Procedure

1. Touch “SELF-DIAG RESULTS” on “SELECT DIAG MODE” screen.
2. Self-diagnosis results are displayed.

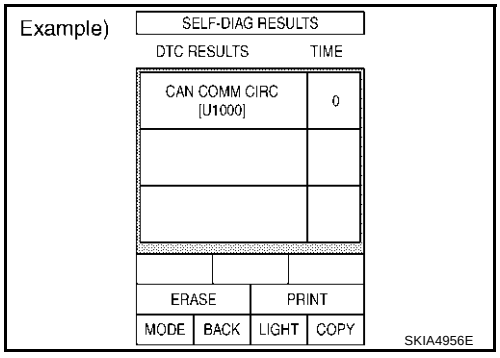

Display Item List

CONSULT-II display [Code]	Malfunction is detected when...
CAN COMM CIRC [U1000]	Malfunction is detected in CAN communication. **CAUTION:** **Even when there is no malfunction on CAN communication system, malfunction may be misinterpreted when battery has low voltage (when maintaining 7V-8V for about 2 seconds) or 10A fuse [No. 19, located in the fuse block (J/B)] is disconnected.**
METER COMM CIRC [B2202]	Malfunction is detected in communication of between combination meter and unified meter and A/C amp.
VEHICLE SPEED CIRC [B2205]	When an erroneous speed signal is input for 1 seconds. **CAUTION:** **Even when there is no malfunction on speed signal system, malfunction may be misinterpreted when battery has low voltage (when maintaining 7V-8V for about 2 seconds).**

“TIME” indicates the condition of the self-diagnosis results judged by each signal input.

- Normal: In case of operating properly at the present in spite of having malfunction in the past, then “TIME” indicates “1-63”.
- Malfunction: Soon after detecting malfunctions by self-diagnoses or current malfunction, “0” is indicated.

After returning to normal condition, every time when ignition switch is turned to “OFF” from “ON”, time will be added like “1”→“2”→“3”···“63”, and when the key operation is performed 64 times, the result of the self-diagnoses will be erased. And if any malfunction is detected again, “0” will be indicated.

CAUTION:

“TIME” keeps showing “0” after returning to normal condition only in the case that incident history of “CAN COMM CIRC [U1000]” remains because of low tire pressure warning control unit, display control unit (with NAVI) or display unit (without NAVI) malfunction.

DATA MONITOR

Operation Procedure

1. Touch “DATA MONITOR” on “SELECT DIAG MODE” screen.
2. Touch either “MAIN SIGNALS” or “SELECTION FROM MENU” on the “DATA MONITOR” screen.

MAIN SIGNALS	Monitors main signals.
SELECTION FROM MENU	Selects and monitors individual signal.

3. When “SELECTION FROM MENU” is selected, touch individual items to be monitored. When “MAIN SIGNALS” is selected, main items will be monitored.

4. Touch “START”.
5. Touch “RECORD” while monitoring, then the status of the monitored item can be recorded. To stop recording, touch “STOP”.

Example)

DATA MONITOR

MONITOR	
SPEED METER	0.0km/h
SPEED OUTPUT	0.0km/h
TACHO METER	0 rpm
W TEMP METER	26°C
FUEL METER	6 lit.
DISTANCE	0 km
FUEL W/L	ON
BUZZER	OFF
M RANGE SW	OFF

Page Down

STOP

MODE | BACK | LIGHT | COPY

SKIA4957E

Display Item List

Display item [Unit]	MAIN SIGNALS	SELECTION FROM MENU	Contents
SPEED METER [km/h] or [mph]	X	X	This is the angle correction value after the speed signal from the ABS actuator and electric unit (control unit) is converted into the vehicle speed.
SPEED OUTPUT [km/h] or [mph]	X	X	This is the angle correction value before the speed signal from the ABS actuator and electric unit (control unit) is converted into the vehicle speed.
TACHO METER [rpm]	X	X	This is the converted value for the engine speed signal from the ECM.
W TEMP METER [°C] or [°F]	X	X	This is the converted value for the engine coolant temperature signal from the ECM.
FUEL METER [lit.]	X	X	This is the processed value for the signal (resistance value) from the fuel gauge.
DISTANCE [km] or [mile]	X	X	This is the calculated value for the speed signal from the ABS actuator and electric unit (control unit), the signal (resistance signal) from the fuel gauge and fuel consumption from ECM.
FUEL W/L [ON/OFF]	X	X	Indicates [ON/OFF] condition of low-fuel warning lamp.
MIL [ON/OFF]		X	Indicates [ON/OFF] condition of malfunction indicator lamp.
AIR PRES W/L [ON/OFF]		X	Indicates [ON/OFF] condition of low tire pressure warning lamp.
SEAT BELT W/L [ON/OFF]		X	Indicates [ON/OFF] condition of seat belt warning lamp.
BUZZER [ON/OFF]	X	X	Indicates [ON/OFF] condition of buzzer.
DOOR W/L [ON/OFF]		X	Indicates [ON/OFF] condition of door warning lamp.
HI-BEAM IND [ON/OFF]		X	Indicates [ON/OFF] condition of high beam indicator.
TURN IND [ON/OFF]		X	Indicates [ON/OFF] condition of turn indicator.
OIL W/L [ON/OFF]		X	Indicates [ON/OFF] condition of oil pressure warning lamp.
VDC IND [ON/OFF]		X	Indicates [ON/OFF] condition of VDC OFF indicator lamp.
ABS W/L [ON/OFF]		X	Indicates [ON/OFF] condition of ABS warning lamp.
SLIP IND [ON/OFF]		X	Indicates [ON/OFF] condition of SLIP indicator lamp.
BRAKE W/L [ON/OFF]		X	Indicates [ON/OFF] condition of brake warning lamp.*1
M RANGE SW [OFF*2]	X	X	—
NM RANGE SW [OFF*2]	X	X	—
AT SFT UP SW [OFF*2]	X	X	—
AT SFT DWN SW [OFF*2]	X	X	—
BRAKE SW [ON/OFF]		X	Indicates [ON/OFF] condition of brake switch (stop lamp switch).
AT-M IND [OFF*2]	X	X	—

Display item [Unit]	MAIN SIGNALS	SELECTION FROM MENU	Contents
AT-M GEAR [1*3]	X	X	—
P RANGE IND [ON/OFF]	X	X	Indicates [ON/OFF] condition of CVT shift P range indicator.
R RANGE IND [ON/OFF]	X	X	Indicates [ON/OFF] condition of CVT shift R range indicator.
N RANGE IND [ON/OFF]	X	X	Indicates [ON/OFF] condition of CVT shift N range indicator.
D RANGE IND [ON/OFF]	X	X	Indicates [ON/OFF] condition of CVT shift D range indicator.
L RANGE IND [ON/OFF]	X	X	Indicates [ON/OFF] condition of CVT shift L range indicator.
CVT IND [ON/OFF]		X	Indicates [ON/OFF] condition of CVT indicator.
S RANGE IND [ON/OFF]	X	X	Indicates [ON/OFF] condition of CVT shift S range indicator.
CRUISE IND [ON/OFF]		X	Indicates [ON/OFF] condition of CRUISE indicator.
SET IND [ON/OFF]		X	Indicates [ON/OFF] condition of SET indicator.
4WD LOCK SW [ON/OFF]		X	Indicates [ON/OFF] condition of AWD lock switch.
4WD LOCK IND [ON/OFF]		X	Indicates [ON/OFF] condition of AWD lock indicator lamp.
4WD W/L [ON/OFF]		X	Indicates [ON/OFF] condition of AWD warning lamp.

NOTE:
Any monitored item that does not match the vehicle being diagnosed is deleted from the display automatically.
*1: Monitor keeps indicating “OFF” when brake warning lamp is on by the parking brake operation or low brake fluid level.
*2: These items are always shown as “OFF” because of “No Manual Mode”.
*3: This item is always shown as “1” because of “No Manual Mode”.

Removal and Installation of Unified Meter and A/C Amp.

AKS005F8

REMOVAL

1. Remove the audio unit. Refer to AV-55, "Removal and Installation of Audio Unit" .
2. Remove the fixing screws, then remove the unified meter and A/C amp.

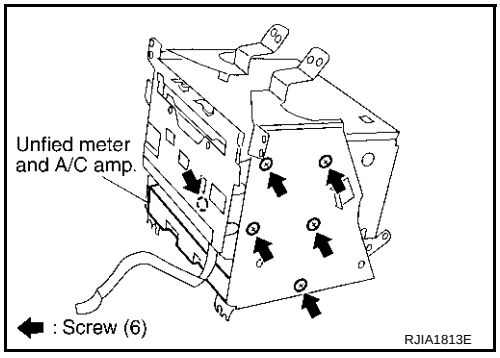

INSTALLATION

Installation is basically in the reverse order of removal.

WARNING LAMPS

PFP:24814

Schematic

AKS004GS

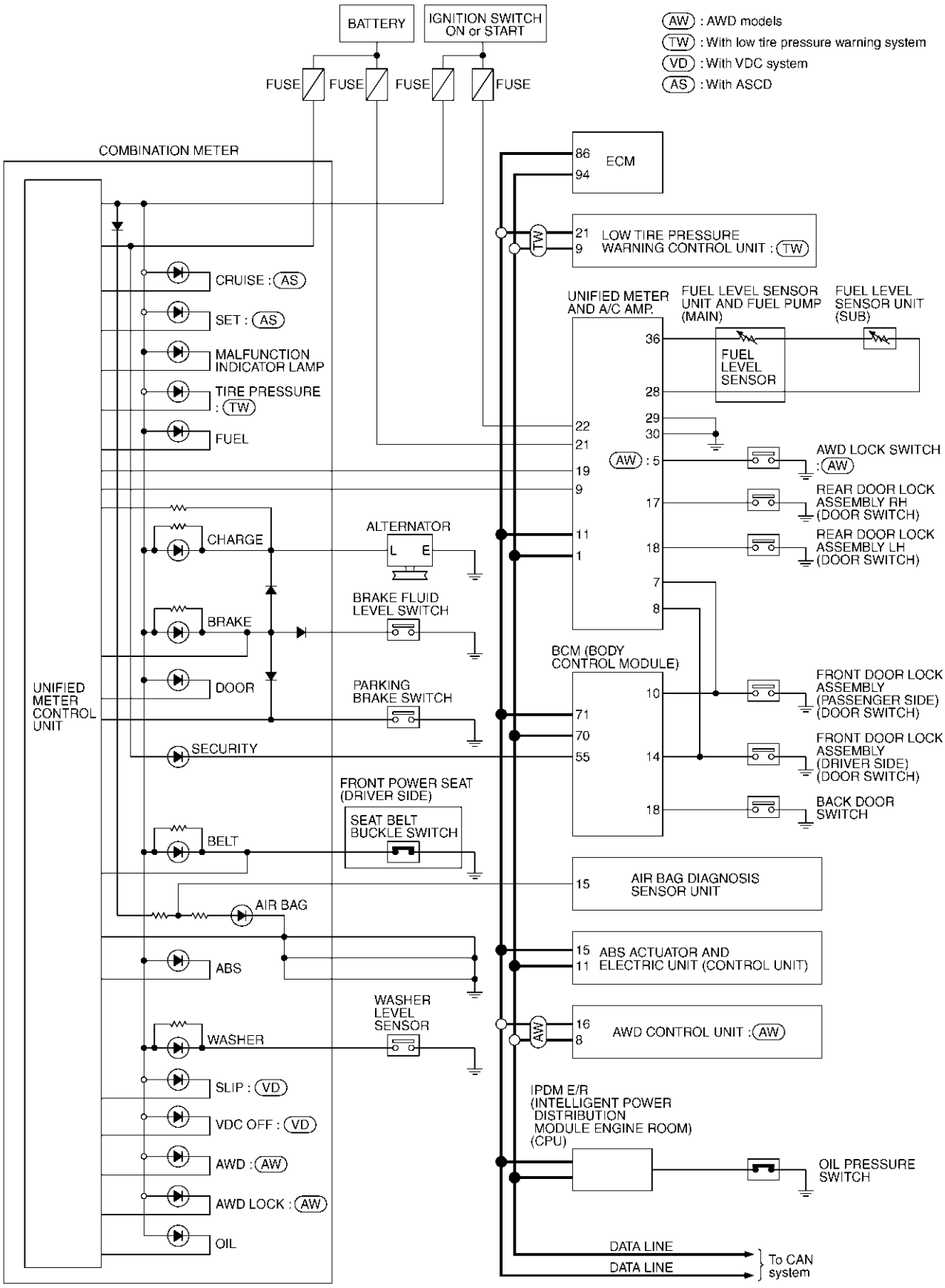

Wiring Diagram — WARN —

AKS004GT

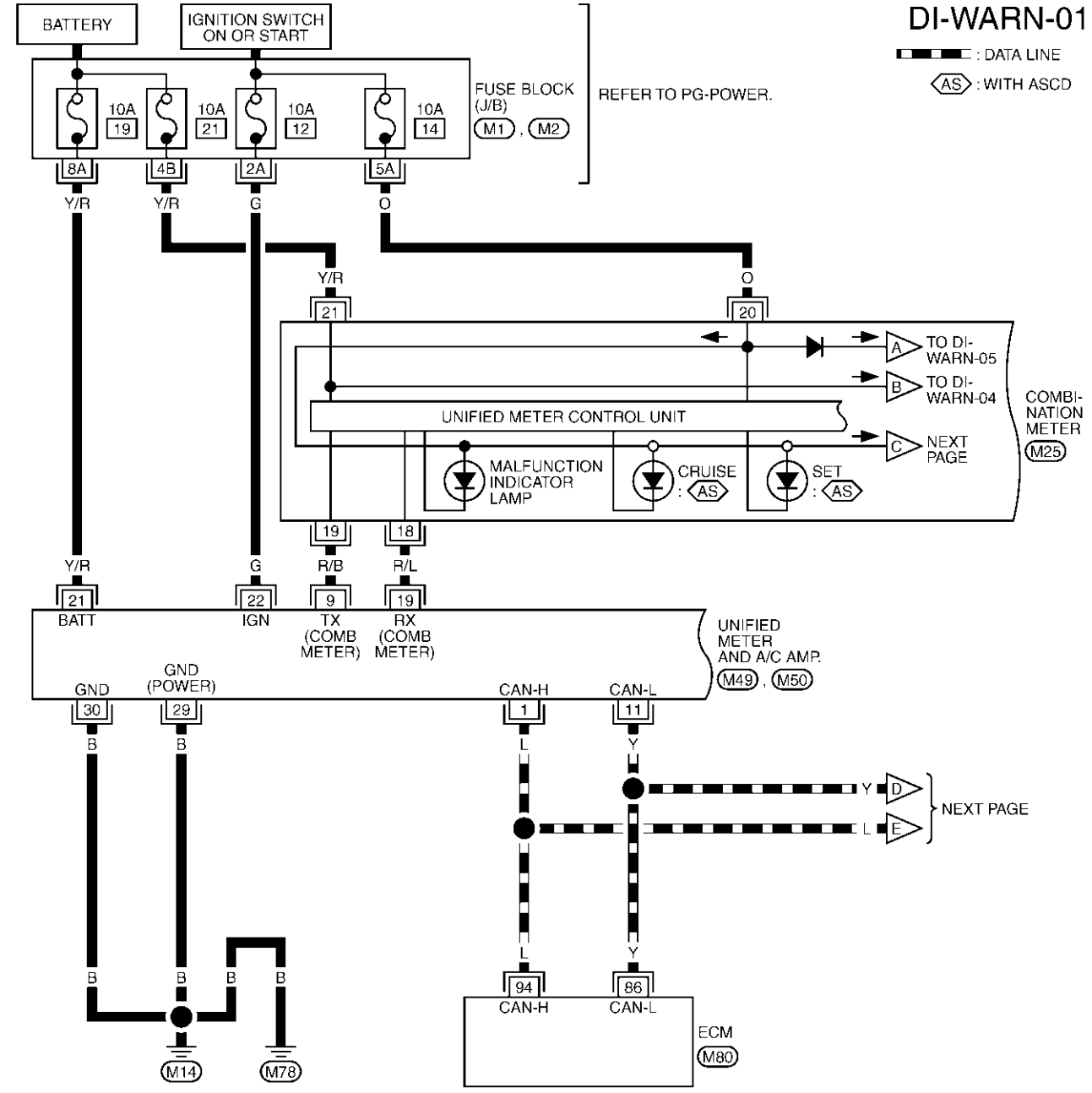

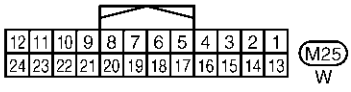

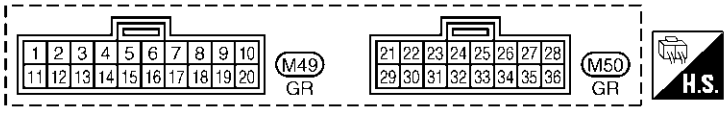

REFER TO THE FOLLOWING.
M1 , M2 -FUSE BLOCK-JUNCTION BOX (J/B)
M80 -ELECTRICAL UNITS

TKWA0818E

DI-WARN-02

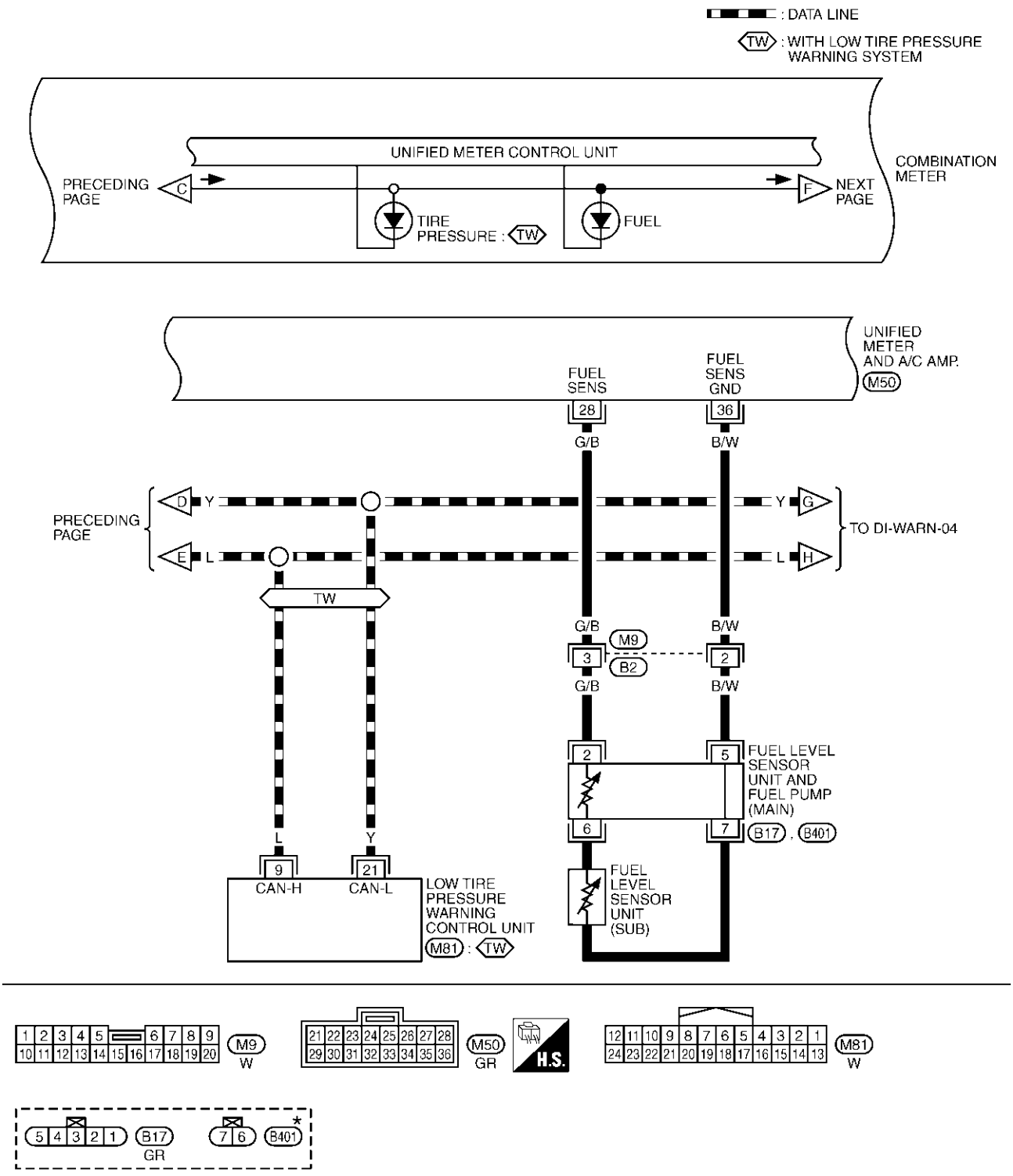

TKWA0819E

DI-WARN-03

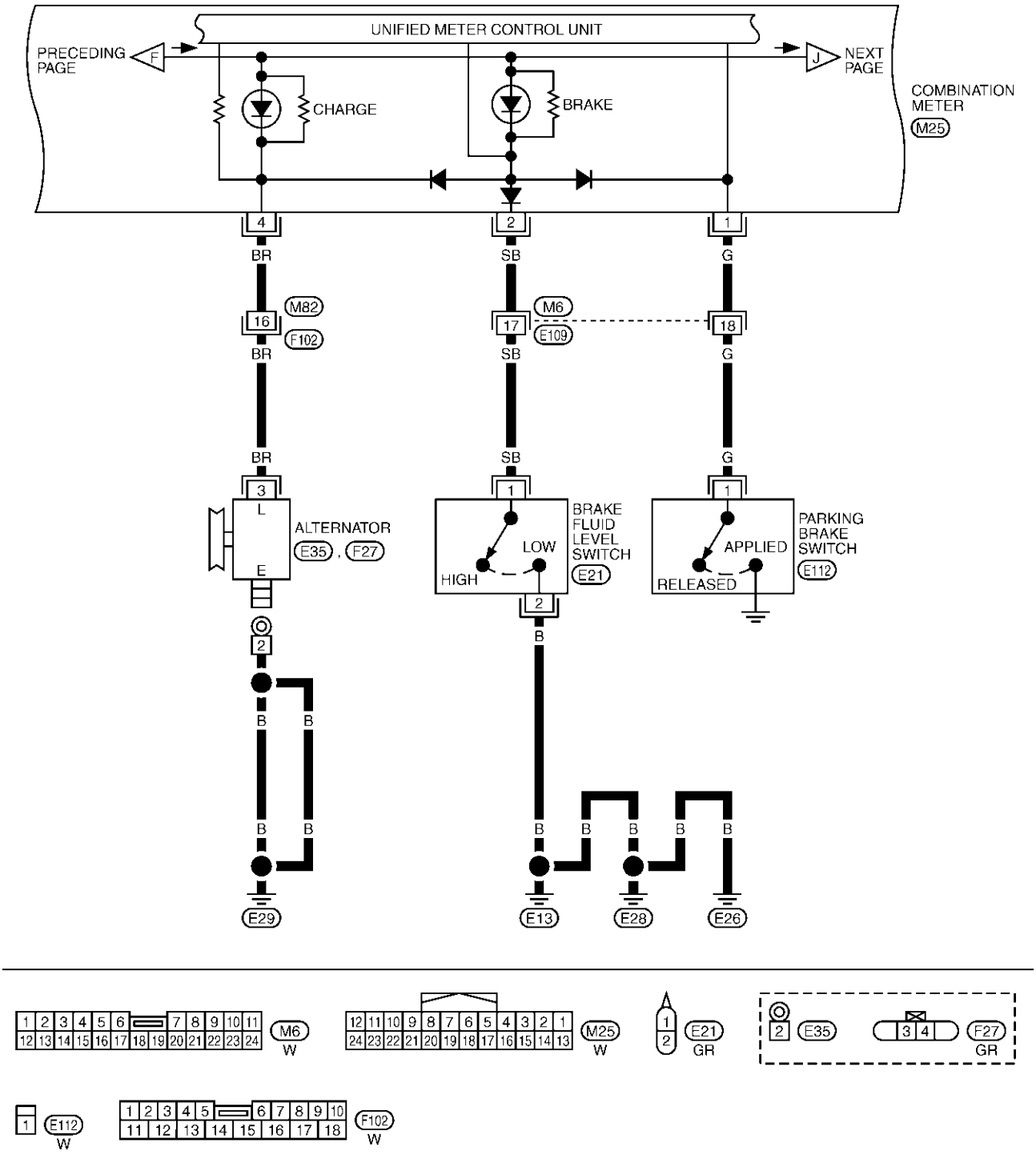
UNIFIED METER CONTROL UNIT
PRECEDING PAGE
F
NEXT PAGE
J
CHARGE
BRAKE
COMBINATION METER
M25
4
2
1
BR
SB
G
M82
16
F102
M6
17
E109
18
3
L
E
ALTERNATOR
E35 , F27
BRAKE FLUID LEVEL SWITCH
LOW
HIGH
E21
PARKING BRAKE SWITCH
APPLIED
RELEASED
E112
B
E29
E13
E28
E26
M6
W
M25
W
E21
GR
E35
F27
GR
E112
W
F102
W
TKWA0820E

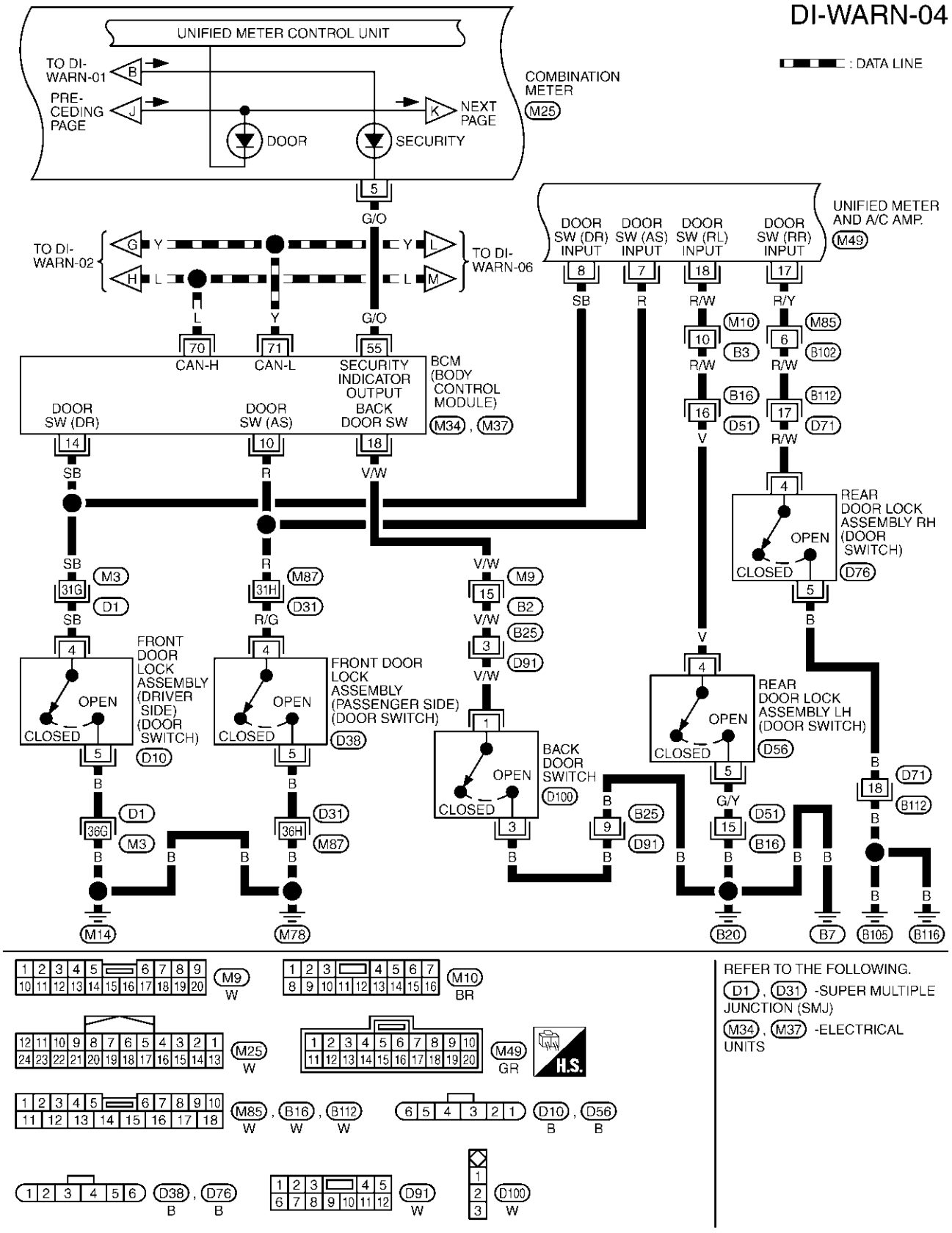
DI-WARN-04
: DATA LINE
UNIFIED METER CONTROL UNIT
TO DI-WARN-01
PRE-CEDING PAGE
NEXT PAGE
DOOR
SECURITY
COMBINATION METER
M25
TO DI-WARN-02
TO DI-WARN-06
UNIFIED METER AND A/C AMP.
M49
DOOR SW (DR) INPUT
DOOR SW (AS) INPUT
DOOR SW (RL) INPUT
DOOR SW (RR) INPUT
CAN-H
CAN-L
SECURITY INDICATOR OUTPUT
BACK DOOR SW
BCM (BODY CONTROL MODULE)
M34 , M37
DOOR SW (DR)
DOOR SW (AS)
REAR DOOR LOCK ASSEMBLY RH (DOOR SWITCH)
D76
FRONT DOOR LOCK ASSEMBLY (DRIVER SIDE) (DOOR SWITCH)
D10
FRONT DOOR LOCK ASSEMBLY (PASSENGER SIDE) (DOOR SWITCH)
D38
BACK DOOR SWITCH
D100
REAR DOOR LOCK ASSEMBLY LH (DOOR SWITCH)
D56
OPEN
CLOSED
M14
M78
B20
B7
B105
B116
M9
W
M10
BR
M25
W
M49
GR
H.S.
M85 , B16 , B112
W W W
D10 , D56
B B
D38 , D76
B B
D91
W
D100
W
REFER TO THE FOLLOWING.
D1 , D31 -SUPER MULTIPLE JUNCTION (SMJ)
M34 , M37 -ELECTRICAL UNITS
TKWA0821E

DI-WARN-05

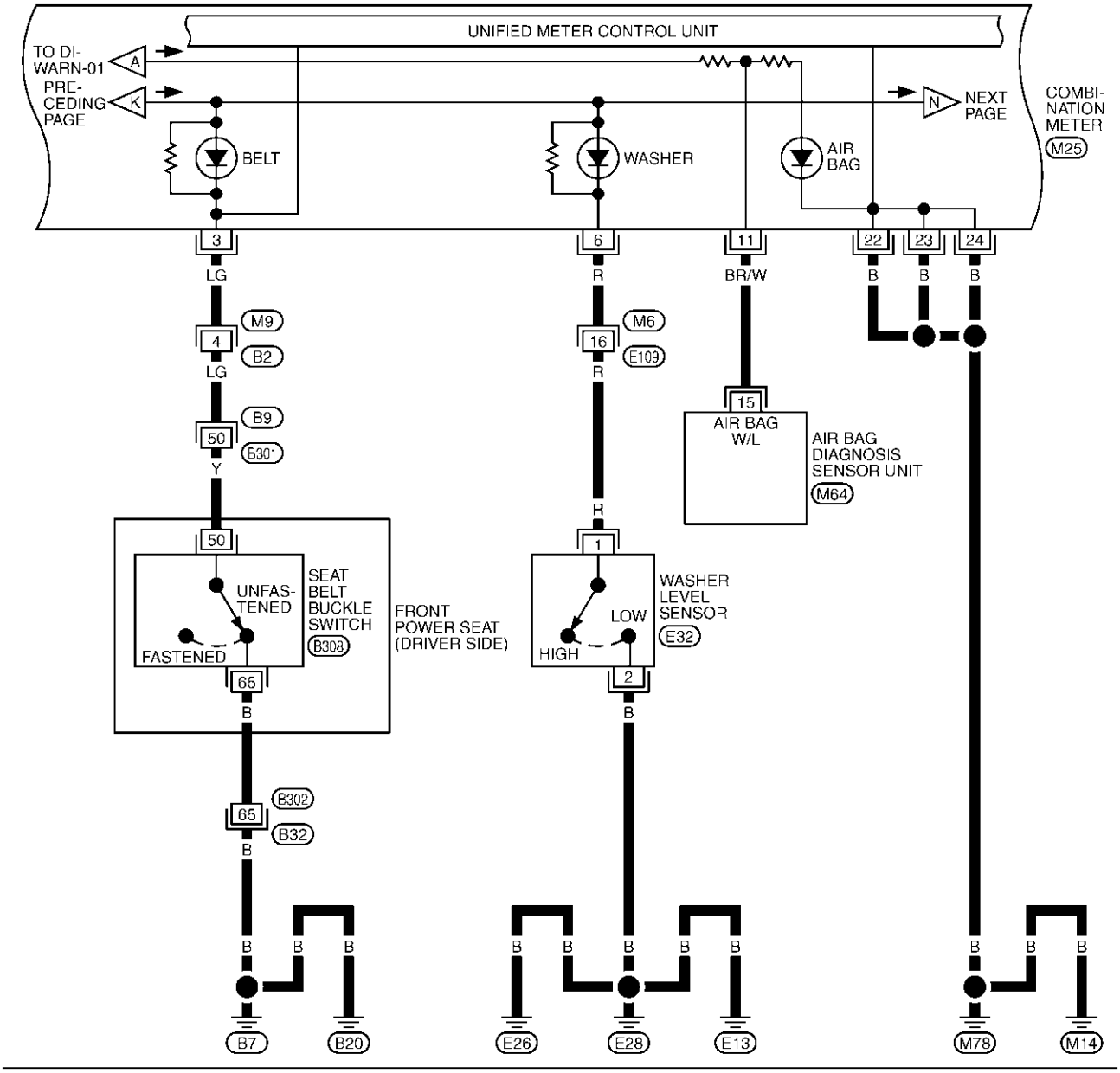

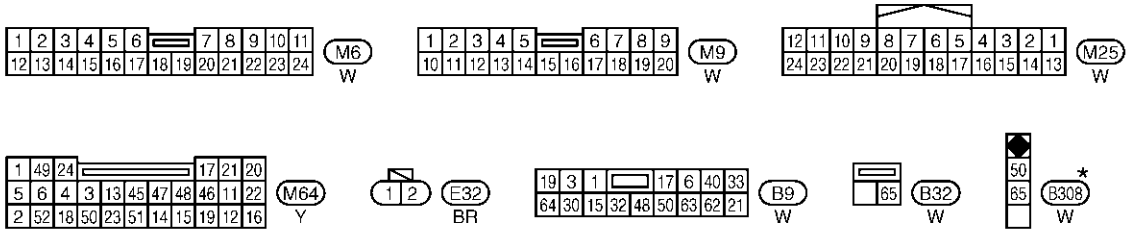

★: THIS CONNECTOR IS NOT SHOWN IN "HARNESS LAYOUT", PG SECTION.

TKWA0822E

DI-WARN-06

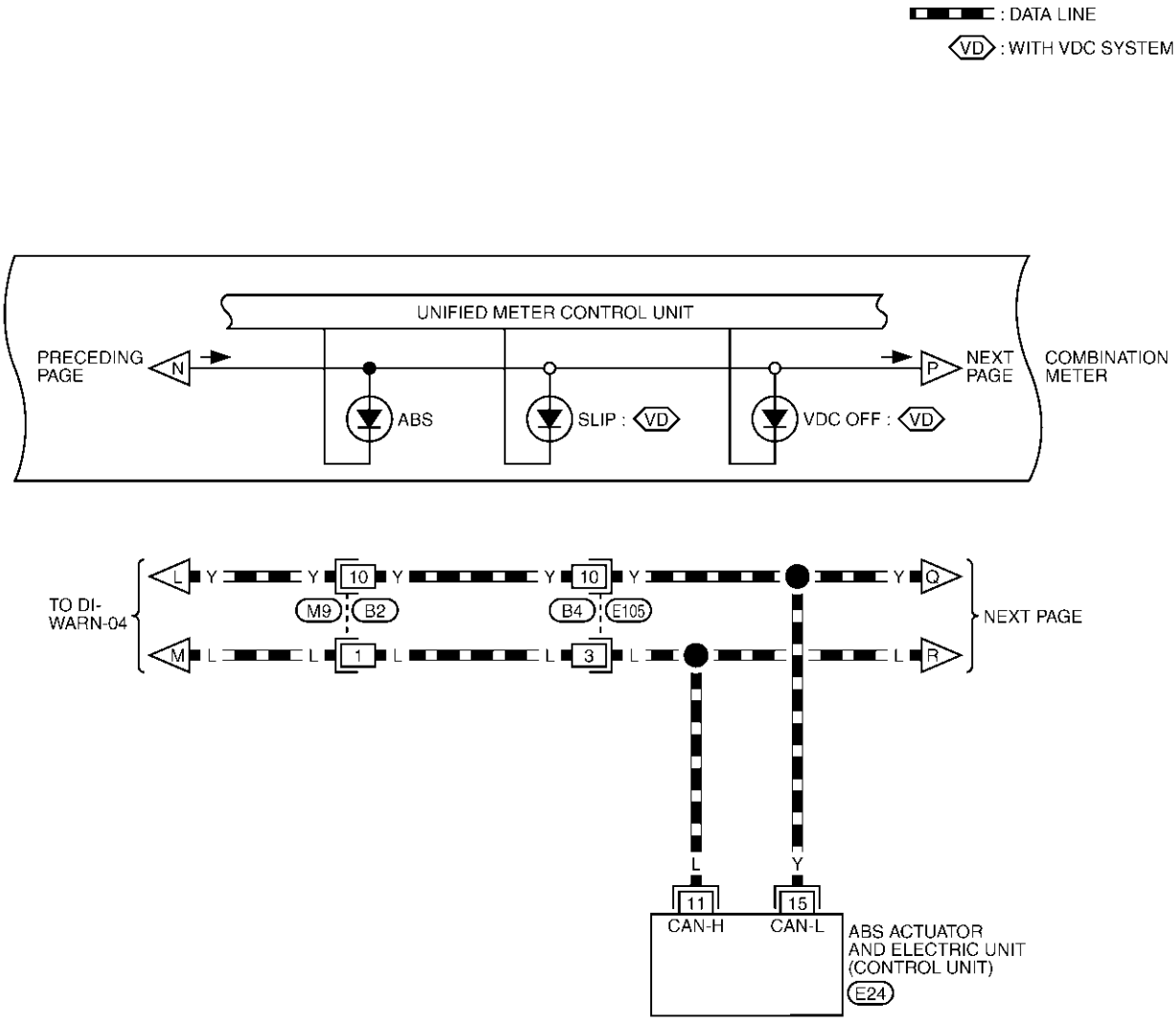

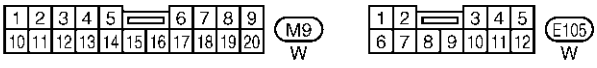

REFER TO THE FOLLOWING.
E24 -ELECTRICAL UNITS

TKWA0823E

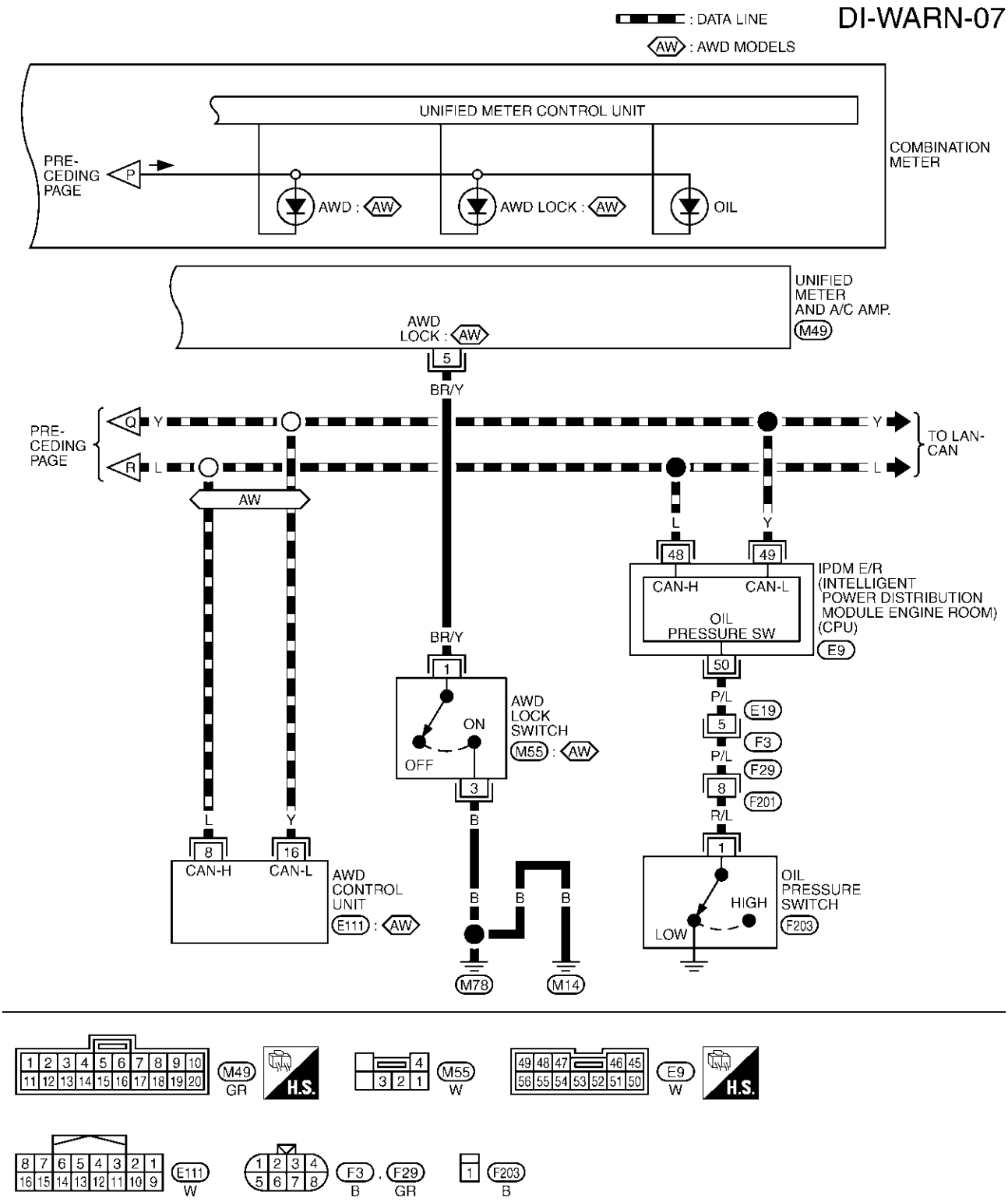
DI-WARN-07
: DATA LINE
AW : AWD MODELS
UNIFIED METER CONTROL UNIT
COMBINATION METER
PRE-CEDING PAGE
P
AWD : AW
AWD LOCK : AW
OIL
UNIFIED METER AND A/C AMP.
M49
AWD LOCK : AW
5
BR/Y
PRE-CEDING PAGE
Q
R
Y
L
TO LAN-CAN
AW
48
49
CAN-H
CAN-L
OIL PRESSURE SW
IPDM E/R (INTELLIGENT POWER DISTRIBUTION MODULE ENGINE ROOM) (CPU)
E9
50
P/L
E19
5
F3
P/L
F29
8
F201
R/L
1
ON
OFF
AWD LOCK SWITCH
M55 : AW
3
B
8
16
CAN-H
CAN-L
AWD CONTROL UNIT
E111 : AW
HIGH
LOW
OIL PRESSURE SWITCH
F203
M78
M14
M49
GR
H.S.
M55
W
E9
W
H.S.
E111
W
F3 , F29
B GR
F203
B
TKWA1252E

Oil Pressure Warning Lamp Stays Off (Ignition Switch ON)

AKS004GU

1. CHECK SELF-DIAGNOSTIC RESULTS OF UNIFIED METER AND A/C AMP.

1. Start engine.
2. Select “METER A/C AMP” on CONSULT-II, and perform self-diagnosis of unified meter and A/C amp. Refer to DI-57, "CONSULT-II Function" .
3. After erasing the self-diagnosis result, perform self-diagnosis again.

Self-diagnostic results content

No malfunction detected>> GO TO 2.
Malfunction detected>> Go to DI-18, "Symptom Chart 2" in “COMBINATION METER”.

2. CHECK IPDM E/R OUTPUT SIGNAL

Activate IPDM E/R auto active test. Refer to PG-41, "Auto Active Test" .

Does oil pressure warning lamp is blinking?

YES >> GO TO 5.
NO >> GO TO 3.

3. CHECK BCM INPUT SIGNAL

Select “DATA MONITOR” of “SIGNAL BUFFER”. Refer to BCS-32, "CONSULT-II" . Operate ignition switch with “OIL P SW” of data monitor and check operate status.

When ignition switch is in ON position (Engine stopped) : OIL P SW ON

When engine running : OIL P SW OFF

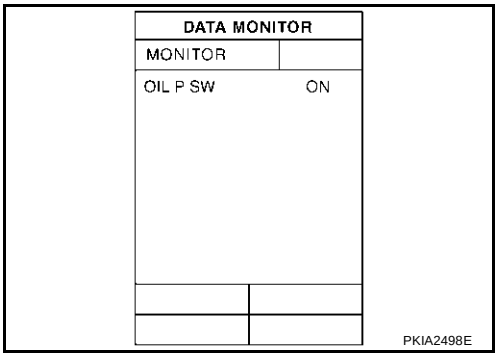

OK or NG

OK >> GO TO 4.
NG >> Replace IPDM E/R. Refer to PG-46, "Removal and Installation of IPDM E/R" .

4. CHECK UNIFIED METER AND A/C AMP. INPUT SIGNAL

Select “METER A/C AMP” on CONSULT-II. Operate ignition switch with “OIL W/L” of data monitor and check operation status.

When ignition switch is in ON position (Engine stopped) : OIL W/L ON

When engine running : OIL W/L OFF

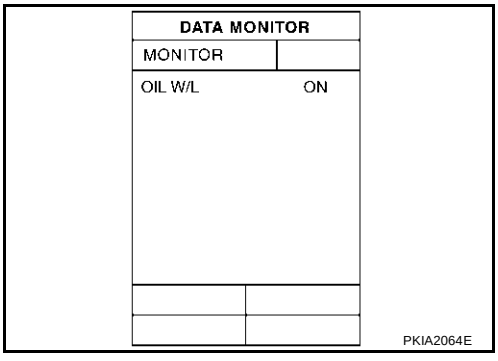

OK or NG

OK >> Replace combination meter.
NG >> Replace BCM. Refer to BCS-36, "Removal and Installation of BCM" .

5. CHECK OIL PRESSURE SWITCH CIRCUIT

1. Turn ignition switch OFF.
2. Disconnect IPDM E/R connector and oil pressure switch connector.
3. Check continuity between IPDM E/R harness connector E9 terminal 50 (P/L) and oil pressure switch harness connector F203 terminal 1 (R/L).

Continuity should exist.

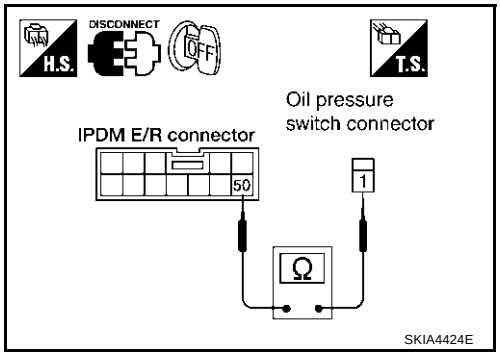

OK or NG

OK >> GO TO 6.
NG >> Repair harness or connector.

6. CHECK OIL PRESSURE SWITCH

Check oil pressure switch. Refer to DI-71, "OIL PRESSURE SWITCH" .

OK or NG

OK >> Replace IPDM E/R. Refer to PG-46, "Removal and Installation of IPDM E/R" .
NG >> Replace oil pressure switch.

Oil Pressure Warning Lamp Does Not Turn Off (Oil Pressure Is Normal)

AKS005GW

NOTE:
For oil pressure inspection, refer to LU-6, "OIL PRESSURE CHECK" .

1. CHECK IPDM E/R OUTPUT SIGNAL

1. Disconnect oil pressure switch connector.
2. Turn ignition switch ON.
3. Check voltage between oil pressure switch harness connector F203 terminal 1 (R/L) and ground.

Battery voltage should exist.

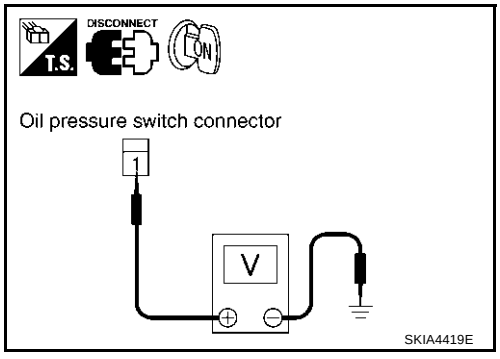

OK or NG

OK >> GO TO 2.
NG >> GO TO 3.

2. CHECK OIL PRESSURE SWITCH

1. Turn ignition switch OFF.
2. Check oil pressure switch. Refer to DI-71, "OIL PRESSURE SWITCH" .

OK or NG

OK >> Replace IPDM E/R. Refer to PG-46, "Removal and Installation of IPDM E/R" .
NG >> Replace oil pressure switch.

3. CHECK OIL PRESSURE SWITCH CIRCUIT

1. Disconnect IPDM E/R connector.
2. Check continuity between IPDM E/R harness connector E9 terminal 50 (P/L) and ground.

Continuity should not exist.

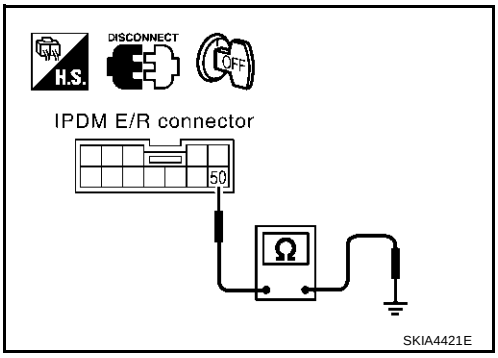

OK or NG

OK >> Replace IPDM E/R. Refer to PG-46, "Removal and Installation of IPDM E/R" .

NG >> Repair harness or connector.

AKS005GX

Component Inspection

OIL PRESSURE SWITCH

Check continuity between oil pressure switch and ground.

Condition	Oil pressure kPa (kg/cm^2 , psi)	Continuity
Engine stopped	Less than 29 (0.3, 4)	Yes
Engine running	More than 29 (0.3, 4)	No

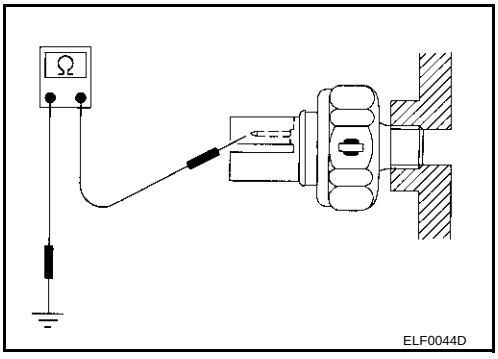

CVT INDICATOR

PFP:24820

Wiring Diagram — CVTIND —

AKS005QK

DI-CVTIND-01

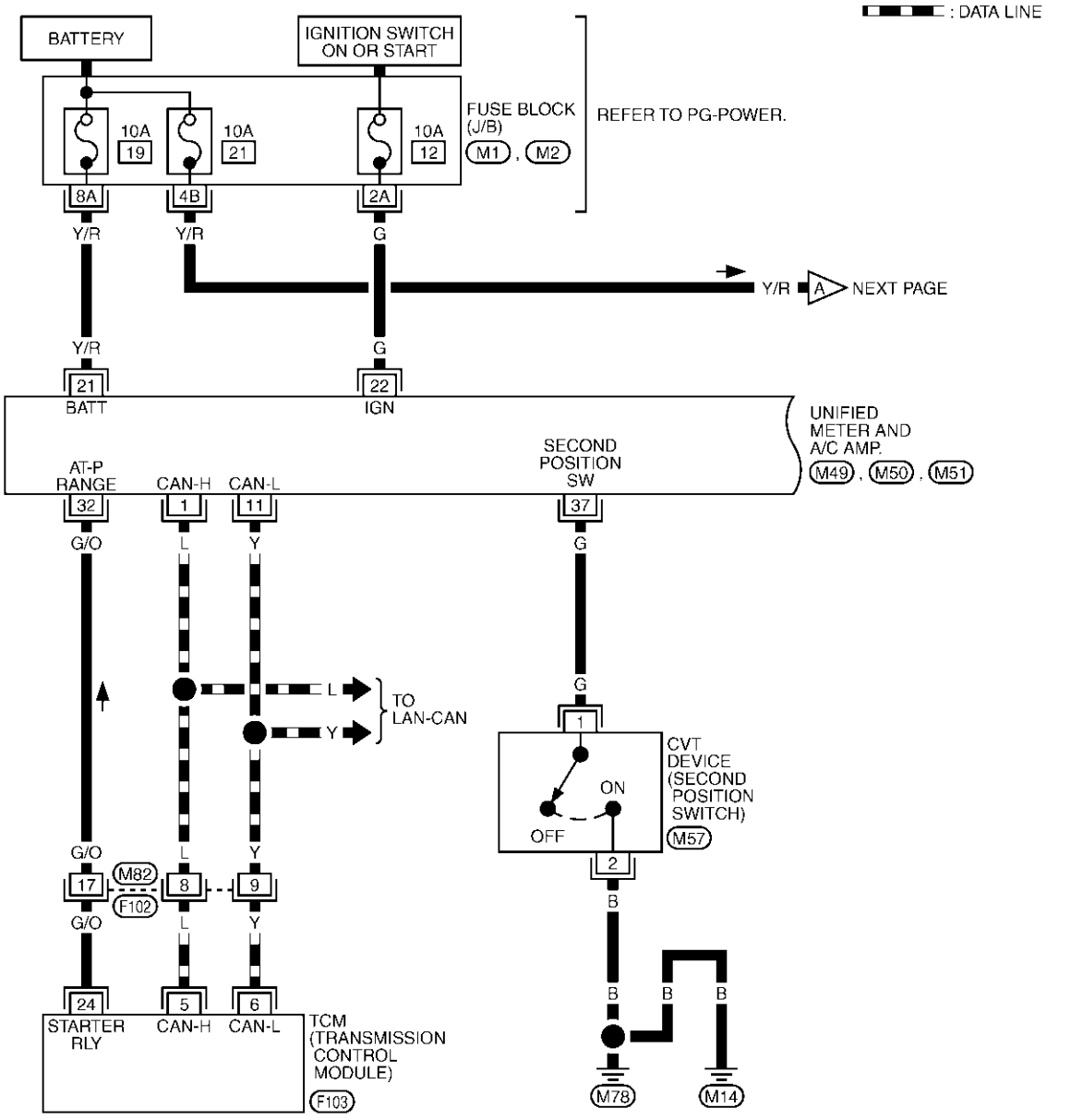

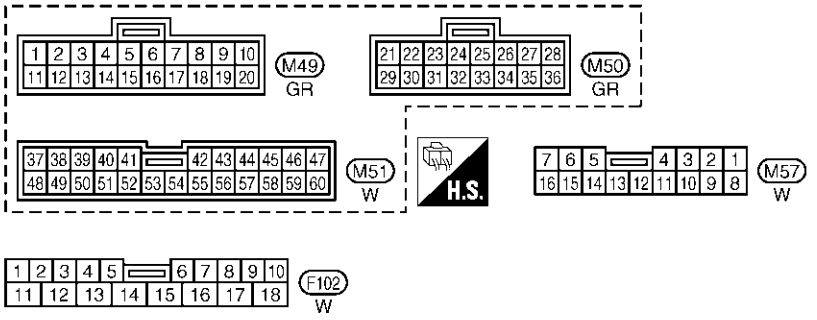

REFER TO THE FOLLOWING.
M1 , M2 -FUSE BLOCK-JUNCTION BOX (J/B)
F103 -ELECTRICAL UNITS

TKWA0827E

DI-CVTIND-02

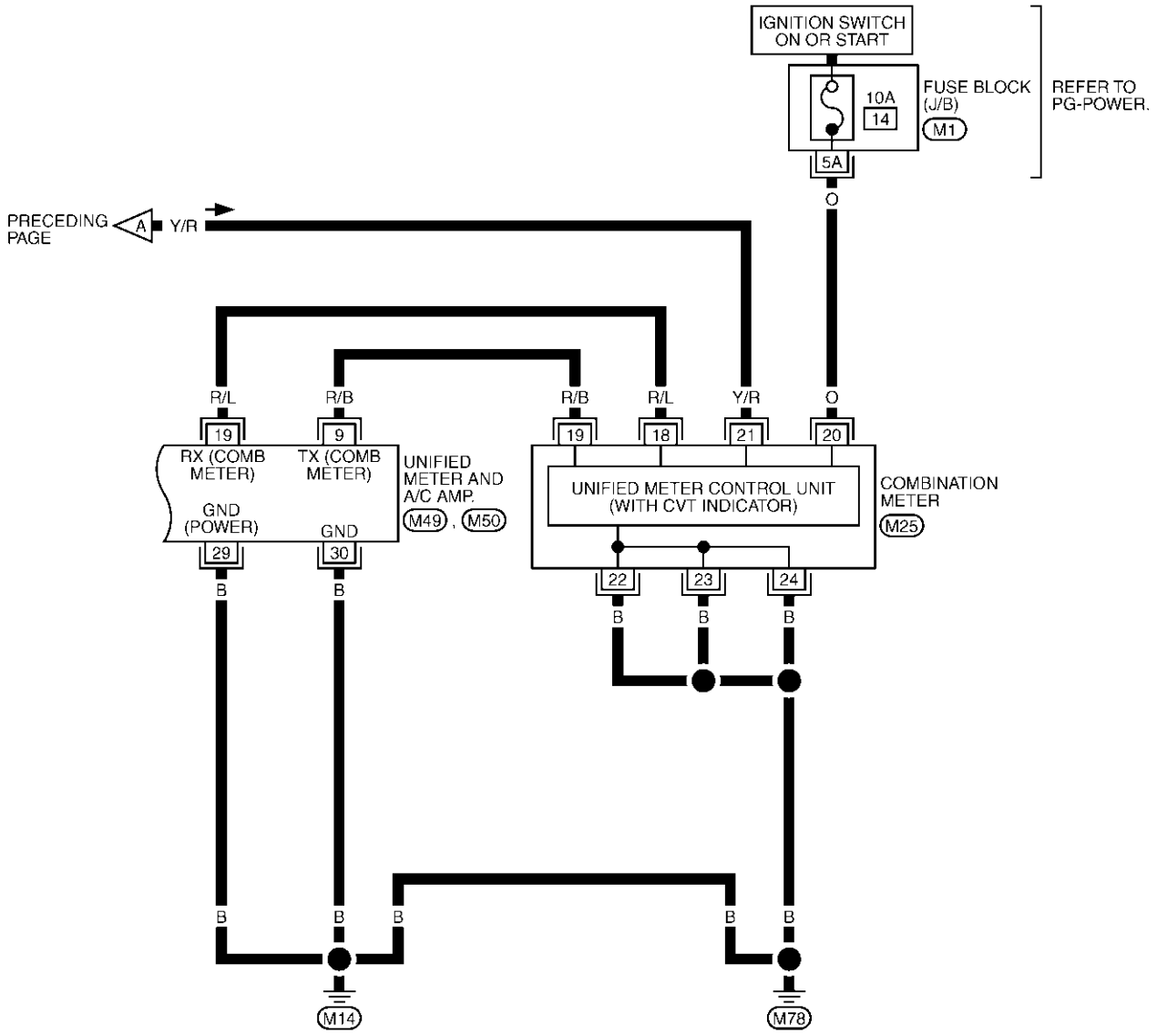

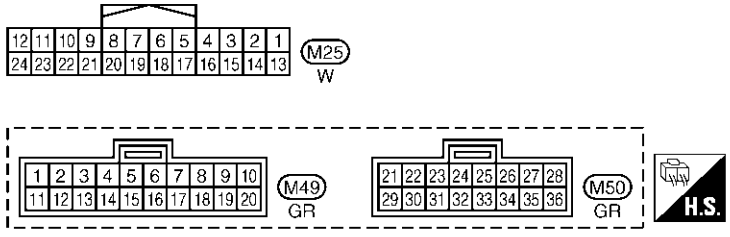

REFER TO THE FOLLOWING.
M1 -FUSE BLOCK-JUNCTION BOX (J/B)

TKWA0828E

CVT Indicator Does Not Illuminate

AKS005QL

1. CHECK SELF-DIAGNOSIS OF COMBINATION METER

Perform combination meter self-diagnosis. Refer to DI-14, "HOW TO ALTERNATE DIAGNOSIS MODE" .

Are all segments displayed?

YES >> GO TO 2.
NO >> Replace combination meter.

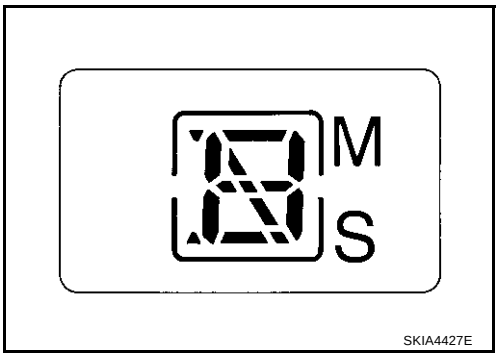

2. CHECK SELF-DIAGNOSTIC RESULTS OF UNIFIED METER AND A/C AMP.

1. Start engine.
2. Select “METER A/C AMP” on CONSULT-II, and perform self-diagnosis of unified meter and A/C amp. Refer to DI-57, "CONSULT-II Function" .
3. After erasing the self-diagnosis result, perform self-diagnosis again.

Self-diagnostic results content

No malfunction detected>> GO TO 3.
Malfunction detected>> Go to DI-18, "Symptom Chart 2" in “COMBINATION METER”.

3. CHECK UNIFIED METER AND A/C AMP. INPUT SIGNAL

1. Lift up drive wheels.
2. Connect CONSULT-II and start engine.
3. Select “DATA MONITOR” of “METER A/C AMP”. Operate each switch with data monitor of “P RANGE IND”, “R RANGE IND”, “N RANGE IND”, “D RANGE IND”, “L RANGE IND” and “S RANGE IND” and check operation status of applicable switches.

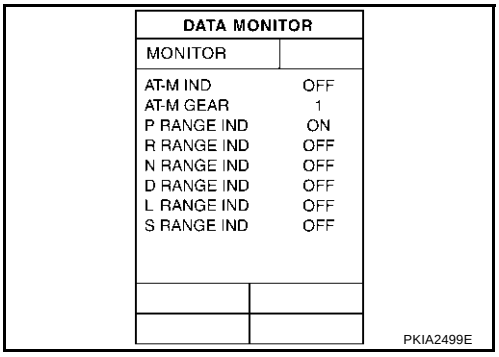

CONSULT-II display	Switch operation	Operation status
AT-M IND	–	OFF
AT-M GEAR	–	1
P RANGE IND	P range position	ON
	Except for P range position	OFF
R RANGE IND	R range position	ON
	Except for R range position	OFF
N RANGE IND	N range position	ON
	Except for N range position	OFF
D RANGE IND	D range position	ON
	Except for D range position	OFF
L RANGE IND	L range position	ON
	Except for L range position	OFF
S RANGE IND	S range position	ON
	Except for S range position	OFF

OK or NG

OK >> Replace combination meter.
NG >> GO TO 4.

4. CHECK CVT DEVICE

Perform CVT device (Second position switch) inspection. Refer to CVT-177, "Diagnostic Procedure" in CVT section.

OK or NG

OK >> GO TO 5.
NG >> Repair corresponding parts.

5. CHECK TCM

Check TCM input/output signal. Refer to CVT-63, "TCM Input/Output Signal Reference Values" in CVT section.

OK or NG

OK >> Replace the unified meter and A/C amp. Refer to DI-60, "Removal and Installation of Unified Meter and A/C Amp." .
NG >> Check corresponding parts.

WARNING CHIME

PFP:24814

Component Parts and Harness Connector Location

AKS004GY

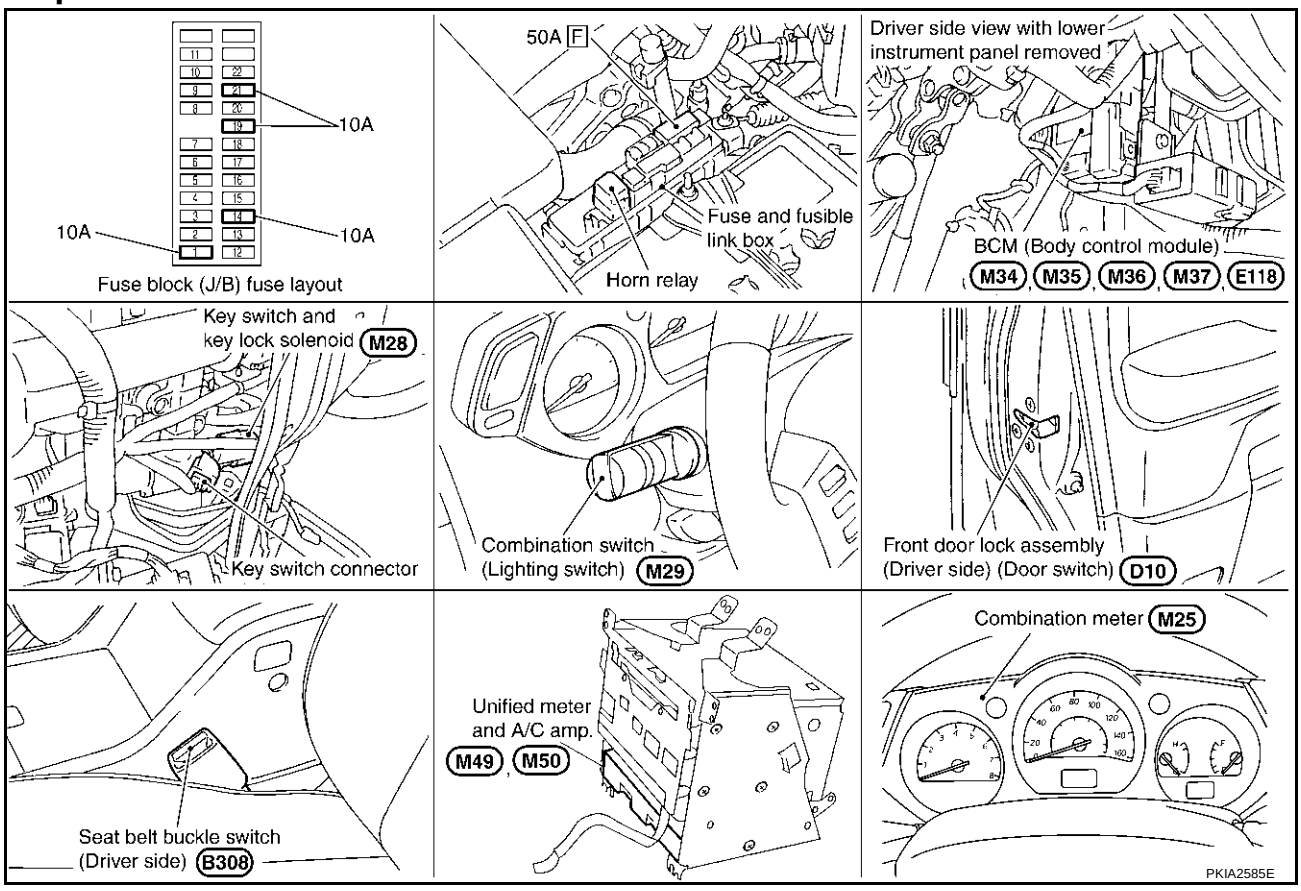

System Description

AKS004GZ

FUNCTION

Power is supplied at all times

- through 50A fuse (letter **F** , located in the fuse and fusible link box)
- to BCM terminal 7
- through 10A fuse [No. 21, located in the fuse block (J/B)]
- to key switch and key lock solenoid terminal 3, and
- to combination meter terminal 21
- through 10A fuse [No. 19, located in the fuse block (J/B)]
- to unified meter and A/C amp. terminal 21.

When ignition switch ON or START position, power is supplied

- through 10A fuse [No. 1, located in the fuse block (J/B)]
- to BCM terminal 35
- through 10A fuse [No. 12, located in the fuse block (J/B)]
- to unified meter and A/C amp. terminal 22
- through 10A fuse [No. 14, located in the fuse block (J/B)]
- to combination meter terminal 20.

Ground is supplied

- to BCM terminal 8
- through body grounds E13, E26 and E28
- to unified meter and A/C amp. terminals 29 and 30, and
- to combination meter terminals 22, 23 and 24
- through body grounds M14 and M78.

NOTE:
When ignition key warning chime, light warning chime, and seat belt warning chime should be conducted at the same time, the priorities for each chime are the following.

1. Light warning chime
2. Ignition key warning chime
3. Seat belt warning chime

IGNITION KEY WARNING CHIME

With the key inserted into the ignition switch, and the driver's door open, the warning chime will sound.
Power is supplied

- through key switch and key lock solenoid terminal 4
- to BCM terminal 62.

Ground is supplied

- to unified meter and A/C amp. terminal 8
- through driver side door switch terminal 4.

Driver side door switch is case grounded.
Unified meter and A/C amp. send door open signal to BCM with CAN communication line.
BCM detects key inserted into the ignition switch, and sends key warning signal to unified meter and A/C amp. with CAN communication line. Unified meter and A/C amp. sends key warning signal to combination meter with communication line between unified meter and A/C amp. and combination meter.
When combination meter receives key warning signal, it sounds warning chime.

LIGHT WARNING CHIME

With the key removed from the ignition switch, the driver's door open, and the lighting switch in 1st or 2nd position, the warning chime will sound. [Except when headlamp battery saver control operates (for 5 minutes after ignition switch is turned to OFF or ACC position) and headlamps do not illuminate.]
Signal is supplied

- from combination switch (lighting switch) terminals 1, 2, 3, 4, 5, 6, 7, 8, 9 and 10
- to BCM terminals 40, 41, 42, 43, 47, 48, 49, 50, 51 and 52.

  NOTE:
  BCM detected lighting switch in 1st or 2nd position, refer to LT-251, "Combination Switch Reading Function" .

Ground is supplied

- to unified meter and A/C amp. terminal 8
- through driver side door switch terminal 4.

Driver side door switch is case grounded.
Unified meter and A/C amp. send door open signal to BCM with CAN communication line.
BCM detects headlamps are illuminated, and sends light warning signal to unified meter and A/C amp. with CAN communication line. Unified meter and A/C amp. sends light warning signal to combination meter with communication line between unified meter and A/C amp. and combination meter.
When combination meter receives light warning signal, it sounds warning chime.

SEAT BELT WARNING CHIME

With ignition switch turned ON and seat belt unfastened [seat belt buckle switch (driver side) ON], warning chime will sound for approximately 6 seconds.
Ground is supplied

- to combination meter terminal 3
- through seat belt buckle switch (driver side) terminal 50.

Seat belt buckle switch (driver side) terminal 65 is grounded through body grounds B7 and B20.
Combination meter sends seat belt unfastened [seat belt buckle switch (driver side) ON] signal to unified meter and A/C amp. with communication line between unified meter and A/C amp. and combination meter.
BCM receives seat belt unfastened [seat belt buckle switch (driver side) ON] signal from unified meter and A/C amp. with CAN communication line, and sends seat belt warning signal to unified meter and A/C amp. with CAN communication line. Unified meter and A/C amp. sends seat belt warning signal to combination meter with communication line between unified meter and A/C amp. and combination meter.
When combination meter receives seat belt warning signal, it sounds warning chime.

CAN Communication System Description

AKS004H0

CAN (Controller Area Network) is a serial communication line for real time application. It is an on-vehicle multiplex communication line with high data communication speed and excellent error detection ability. Many electronic control units are equipped onto a vehicle, and each control unit shares information and links with other control units during operation (not independent). In CAN communication, control units are connected with 2 communication lines (CAN H line, CAN L line) allowing a high rate of information transmission with less wiring. Each control unit transmits/receives data but selectively reads required data only.

CAN Communication Unit For 2WD Models

AKS007PP

Body type	Wagon															
Axle	2WD															
Engine	VQ35DE															
Transmission	CVT															
Brake control	ABS								VDC							
Low tire pressure warning system		×			×	×		×		×			×	×		×
Navigation system			×		×		×	×			×		×		×	×
Automatic drive positioner				×		×	×	×				×		×	×	×
CAN communication unit																
ECM	×	×	×	×	×	×	×	×	×	×	×	×	×	×	×	×
TCM	×	×	×	×	×	×	×	×	×	×	×	×	×	×	×	×
Low tire pressure warning control unit		×			×	×		×		×			×	×		×
Display unit	×	×		×		×			×	×		×		×		
Display control unit			×		×		×	×			×		×		×	×
Data link connector	×	×	×	×	×	×	×	×	×	×	×	×	×	×	×	×
BCM	×	×	×	×	×	×	×	×	×	×	×	×	×	×	×	×
Unified meter and A/C amp.	×	×	×	×	×	×	×	×	×	×	×	×	×	×	×	×
Steering angle sensor									×	×	×	×	×	×	×	×
Driver seat control unit				×		×	×	×				×		×	×	×
ABS actuator and electric unit (control unit)	×	×	×	×	×	×	×	×	×	×	×	×	×	×	×	×
IPDM E/R	×	×	×	×	×	×	×	×	×	×	×	×	×	×	×	×
CAN communication type	DI-79, "TYPE 1/TYPE 2/TYPE 3/TYPE 4/TYPE 5/TYPE 6/TYPE 7/TYPE 8"								DI-84, "TYPE 9/TYPE10/TYPE 11/TYPE 12/TYPE 13/TYPE 14/TYPE 15/TYPE 16"							

×: Applicable

TYPE 1/TYPE 2/TYPE 3/TYPE 4/TYPE 5/TYPE 6/TYPE 7/TYPE 8

System Diagram

- Type1

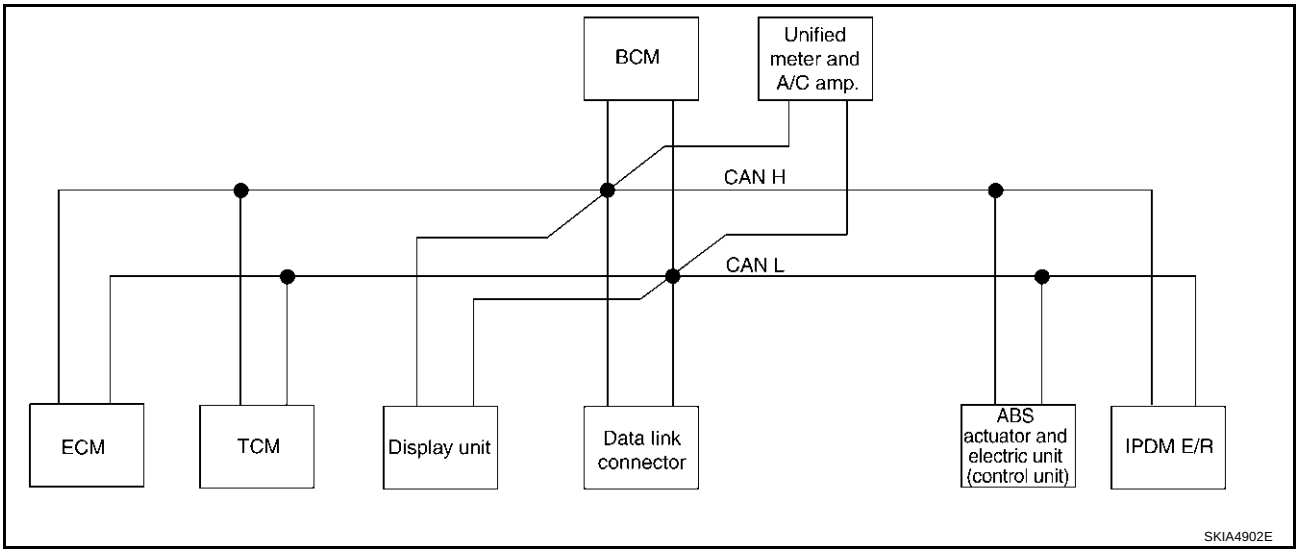

- Type2

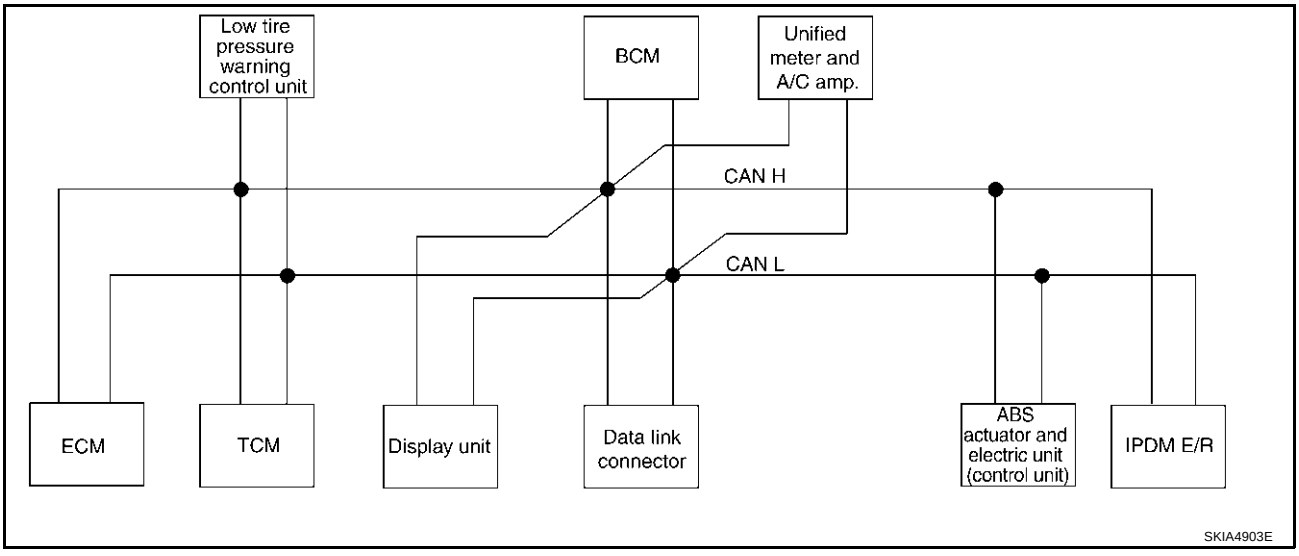

- Type3

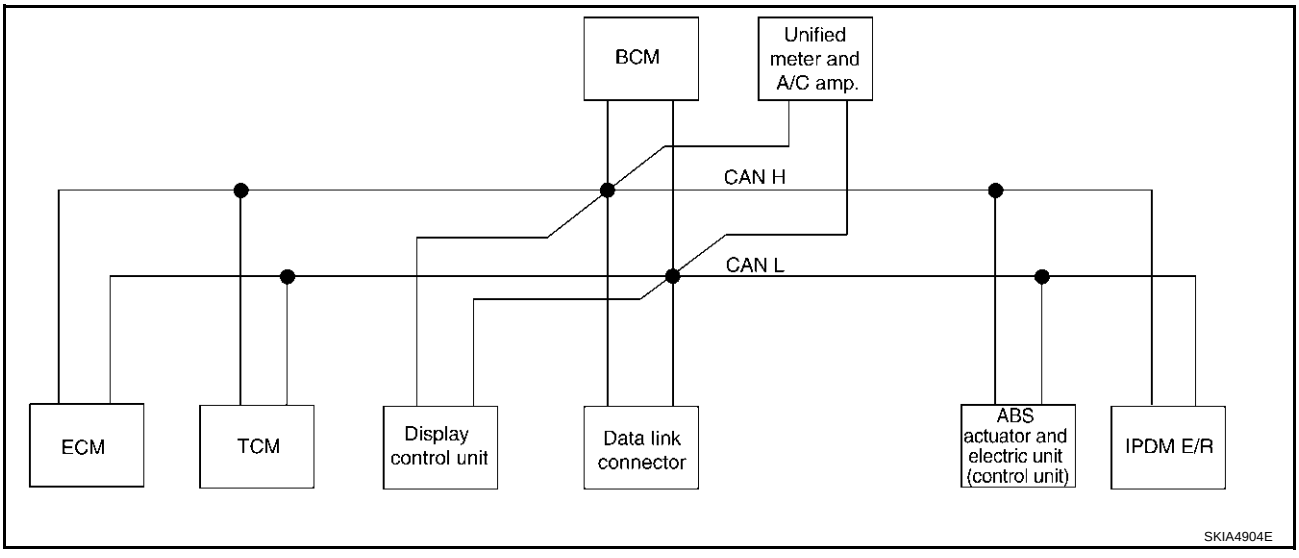

- Type4

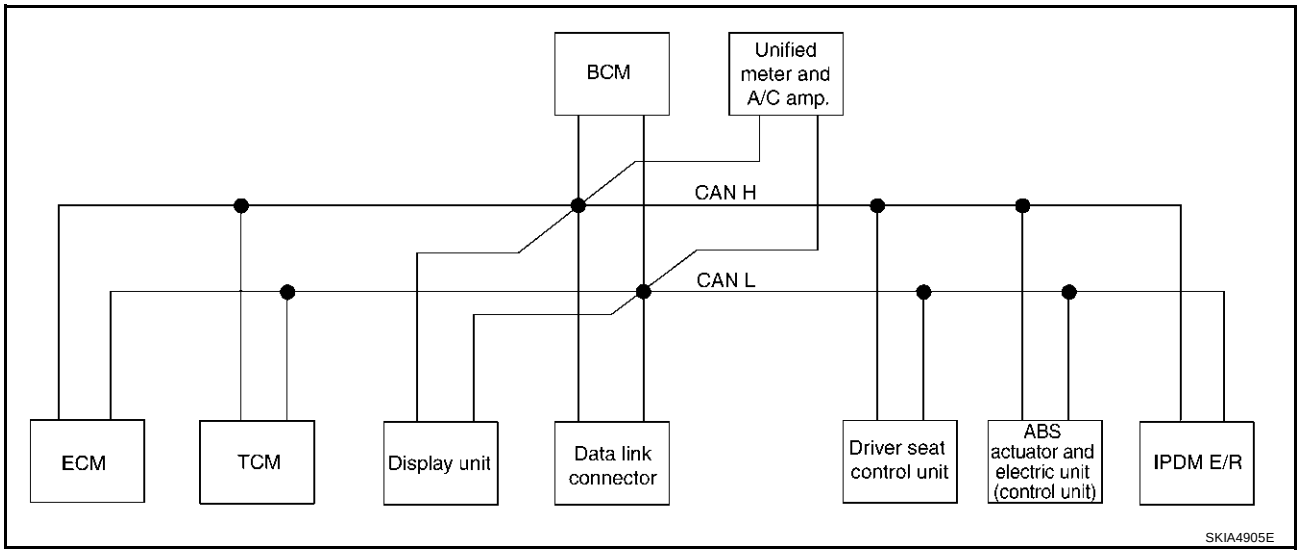

- Type5

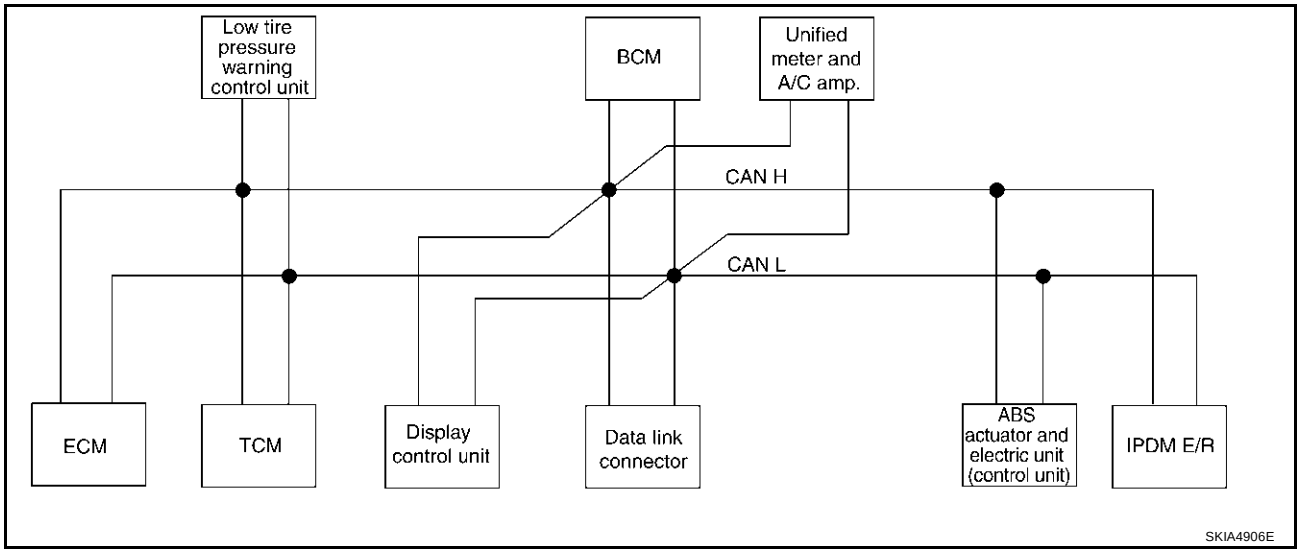

- Type6

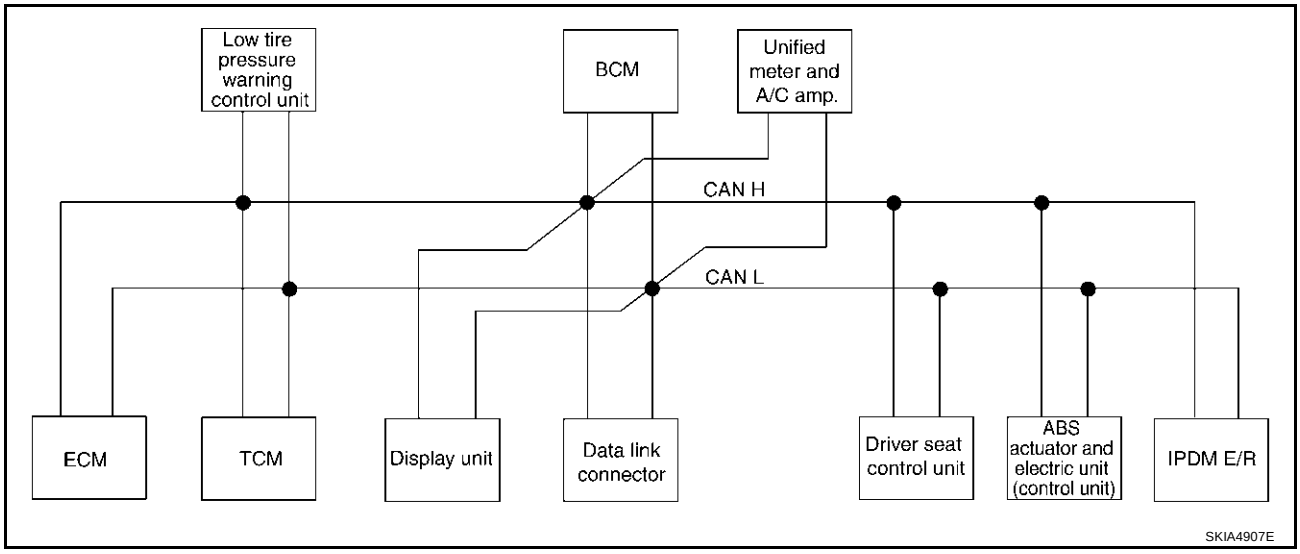

- Type7

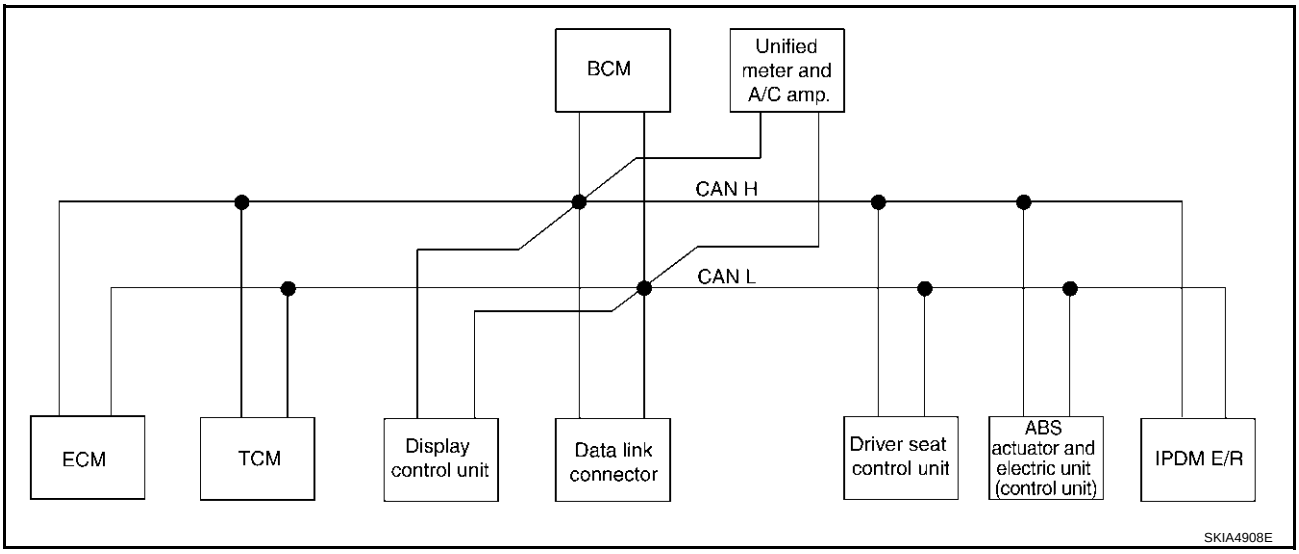
BCM
Unified meter and A/C amp.
CAN H
CAN L
ECM
TCM
Display control unit
Data link connector
Driver seat control unit
ABS actuator and electric unit (control unit)
IPDM E/R
SKIA4908E

- Type8

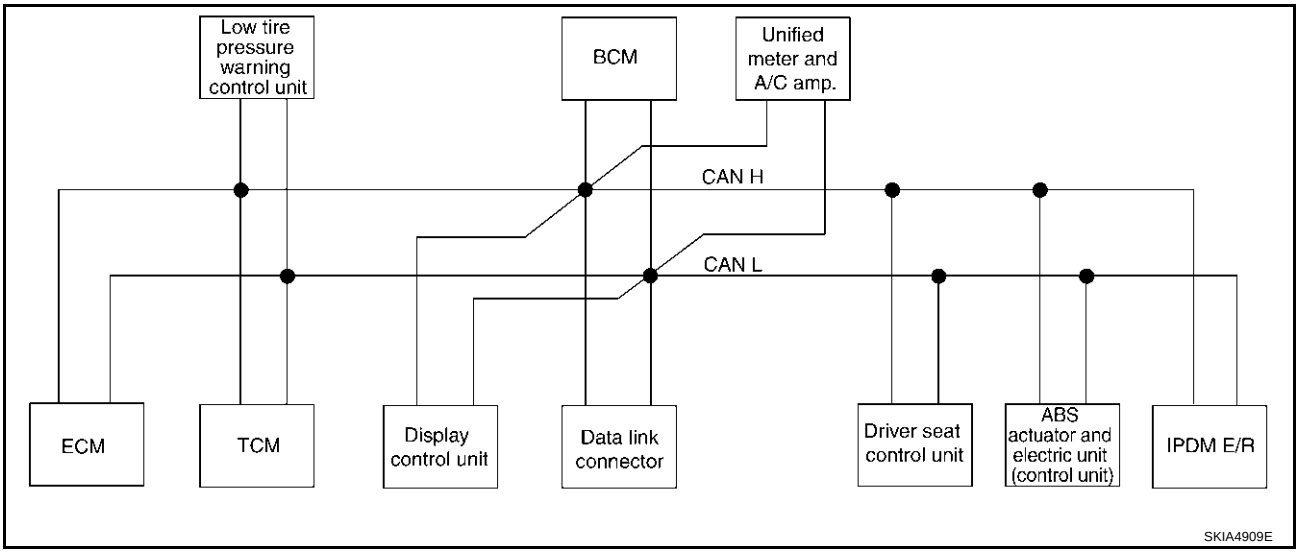
Low tire pressure warning control unit
BCM
Unified meter and A/C amp.
CAN H
CAN L
ECM
TCM
Display control unit
Data link connector
Driver seat control unit
ABS actuator and electric unit (control unit)
IPDM E/R
SKIA4909E

Input/output Signal Chart

T: Transmit R: Receive

Signals	ECM	TCM	Low tire pressure warning control unit	Display unit	Display control unit	BCM	Unified meter and A/C amp.	Driver seat control unit	ABS actuator and electric unit (control unit)	IPDM E/R
Engine speed signal	T	R			R	R	R			
Engine status signal	T					R				
Engine coolant temperature signal	T						R			
CVT position indicator signal		T					R			
Second position signal		R					T			
Second position indicator signal		T					R			
Engine and CVT integrated control signal	T	R								
	R	T								
Accelerator pedal position signal	T	R								
Closed throttle position signal	T	R								
Wide open throttle position signal	T	R								
Key switch signal						T		R		
Ignition switch signal						T		R		R
P range signal		T						R		
Stop lamp switch signal		R					T			
Fuel consumption monitor signal	T						R			
CVT self-diagnosis signal	R	T								
ABS operation signal		R							T	
Air conditioner switch signal	R					T				
A/C compressor request signal	T									R
A/C compressor feedback signal	T						R			
Blower fan motor switch signal	R					T				
A/C control signal				T	T		R			
				R	R		T			
Cooling fan speed request signal	T									R
Position lights request signal						T	R			R
Low beam request signal						T				R
Low beam status signal	R									T
High beam request signal						T	R			R
High beam status signal	R									T
Front fog lights request signal						T				R
Vehicle speed signal		R					R		T	
	R		R		R	R	T	R		
Sleep request 1 signal						T	R			
Sleep request 2 signal						T				R
Door switch signal						R	T			
				R	R	T	R	R		R
Turn indicator signal						T	R			

Signals	ECM	TCM	Low tire pressure warning control unit	Display unit	Display control unit	BCM	Unified meter and A/C amp.	Driver seat control unit	ABS actuator and electric unit (control unit)	IPDM E/R
Key fob ID signal						T		R		
Key fob door unlock signal						T		R		
Seat belt buckle switch signal						R	T			
Oil pressure switch signal						R				T
						T	R			
Buzzer output signal						T	R			
Fuel level sensor signal	R						T			
Fuel level low warning signal				R	R		T			
Malfunction indicator lamp signal	T						R			
ASCD SET lamp signal	T						R			
ASCD CRUISE lamp signal	T						R			
Input shaft revolution signal	R	T								
Output shaft revolution signal	R	T								
Front wiper request signal						T				R
Front wiper stop position signal						R				T
Rear window defogger switch signal						T				R
Rear window defogger control signal	R			R	R					T
Hood switch signal						R				T
Theft warning horn request signal						T				R
Horn chirp signal						T				R
Tire pressure signal			T				R			
Tire pressure data signal			T	R	R					
ABS warning lamp signal							R		T	
Brake warning lamp signal							R		T	
System setting signal				T	T			R		
Parking brake switch signal						R	T			

TYPE 9/TYPE10/TYPE 11/TYPE 12/TYPE 13/TYPE 14/TYPE 15/TYPE 16

System Diagram

- Type9

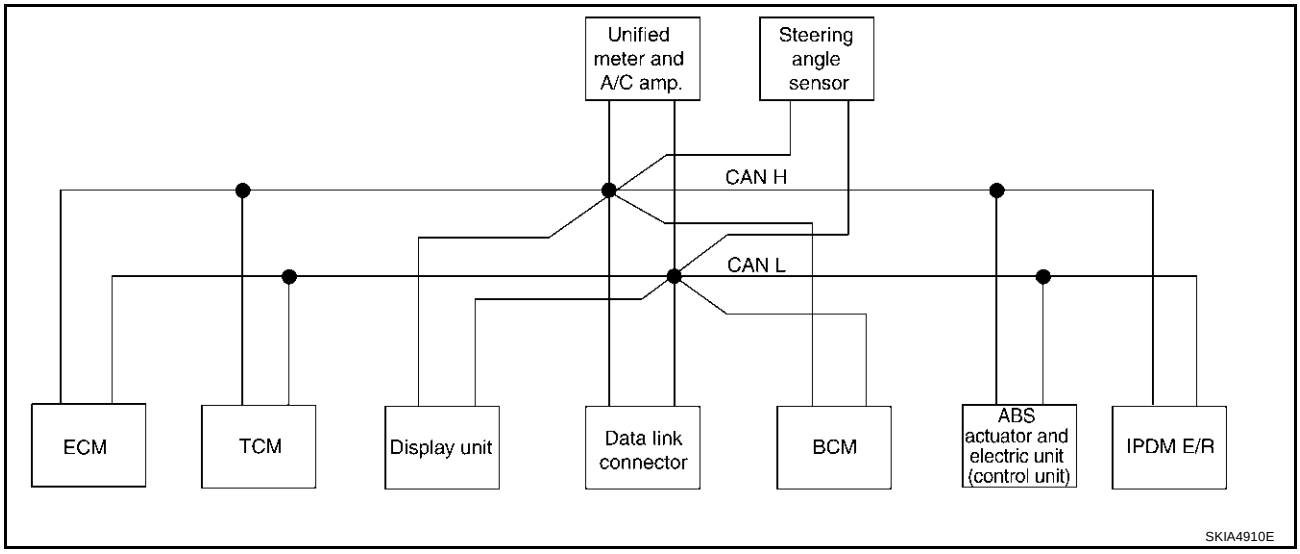

- Type10

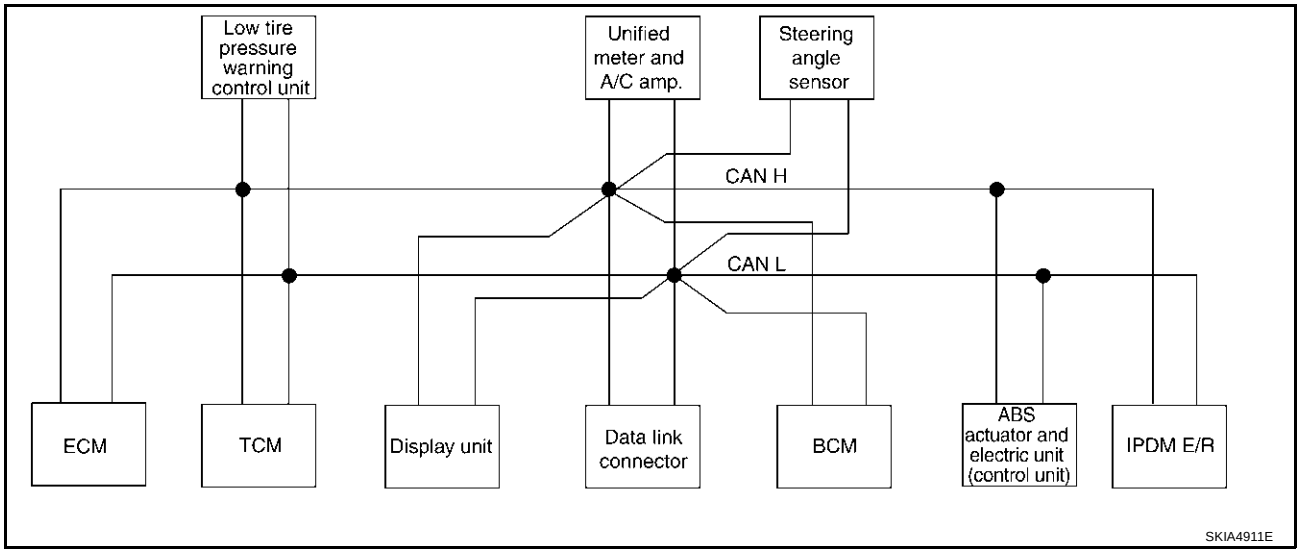

- Type11

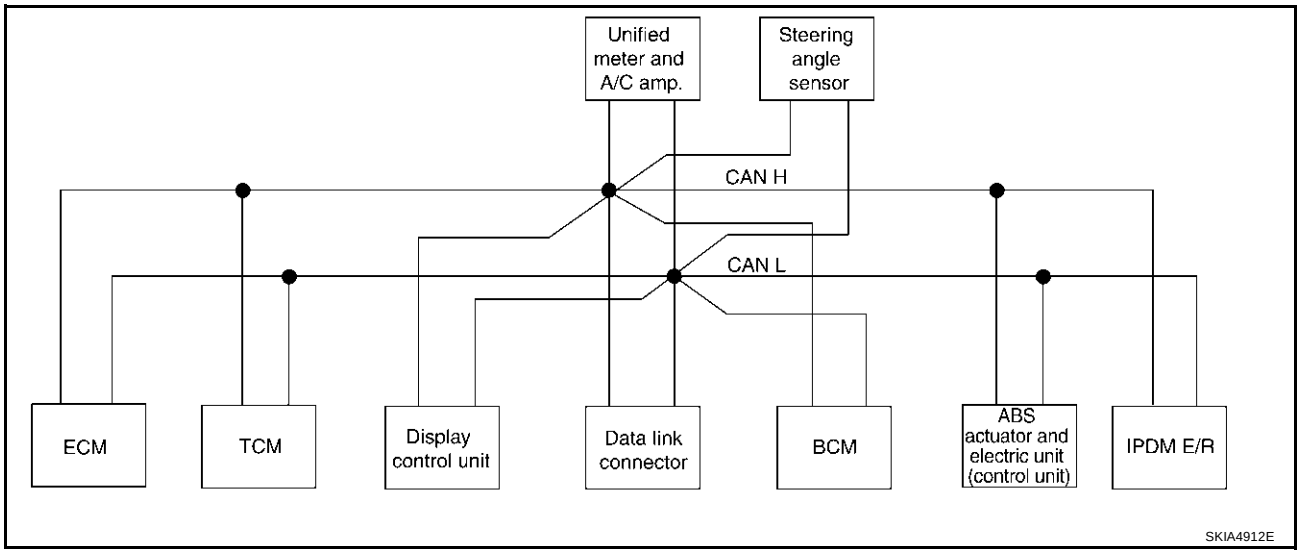

- Type12

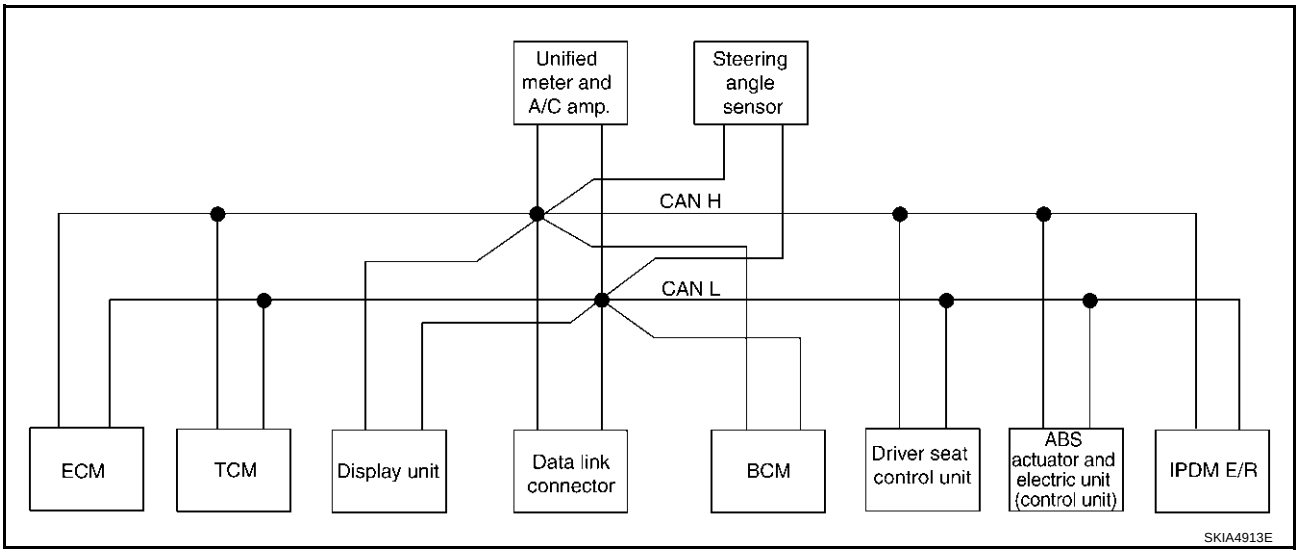

- Type13

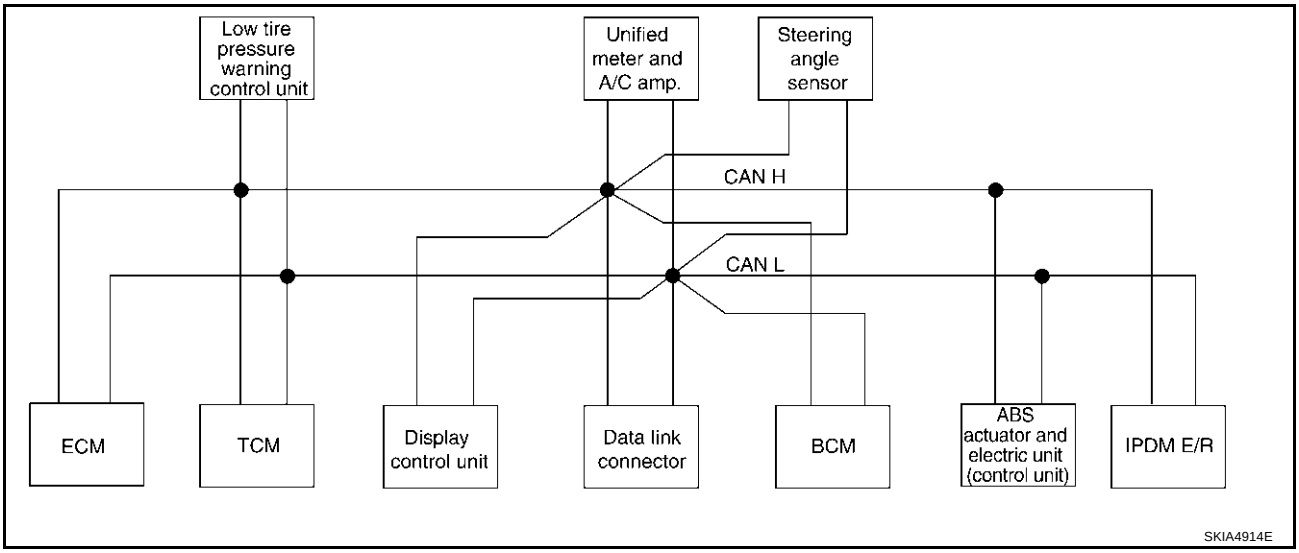

- Type14

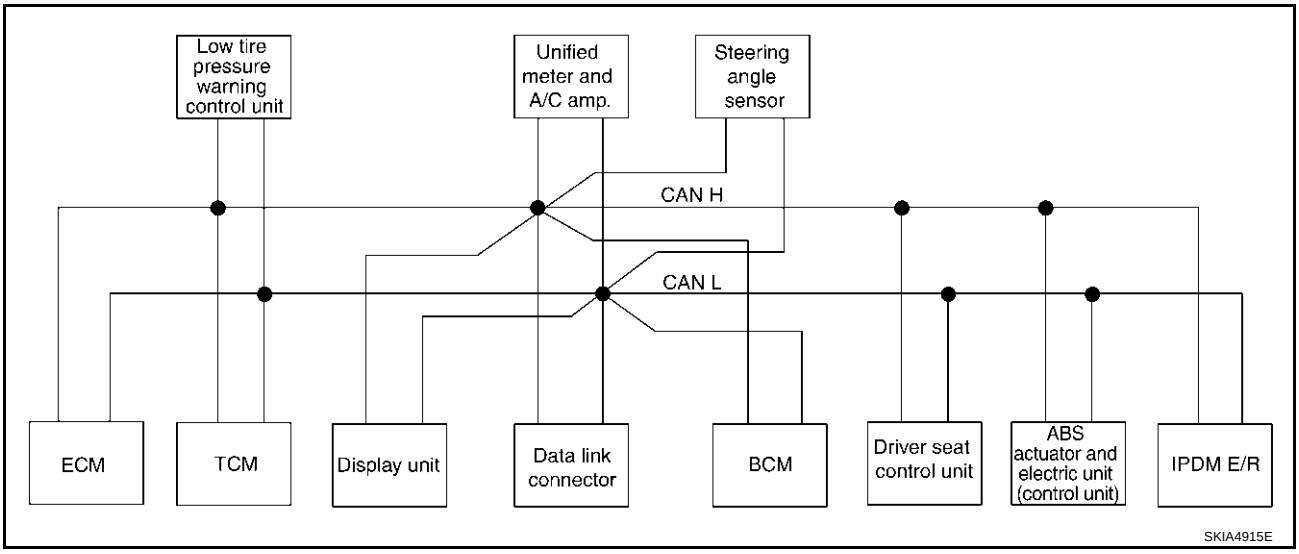

- Type15

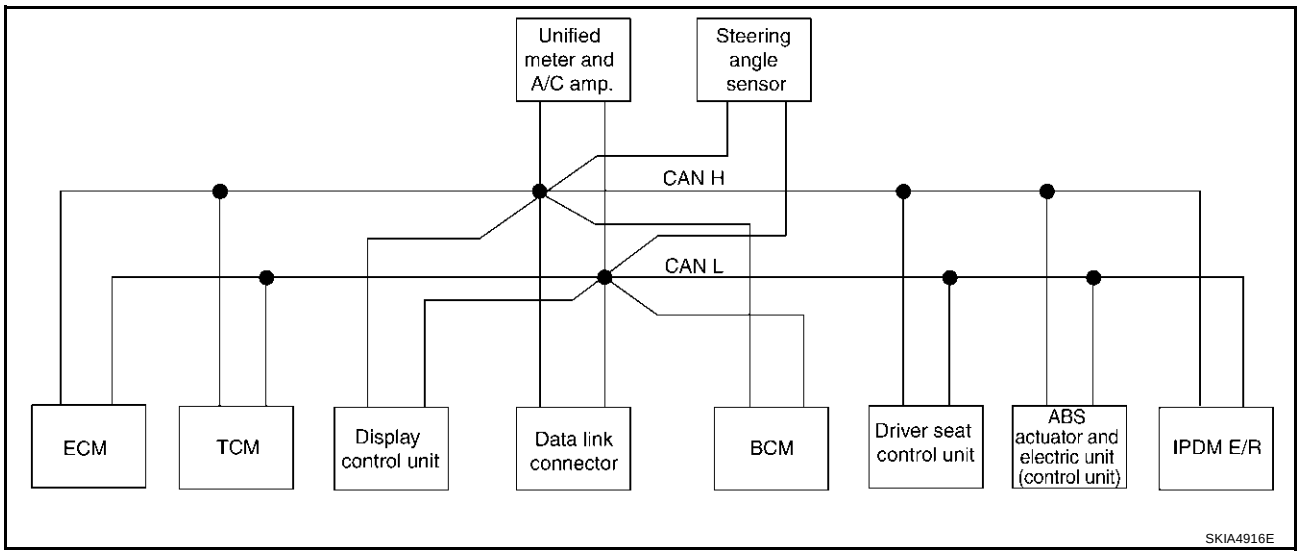

- Type16

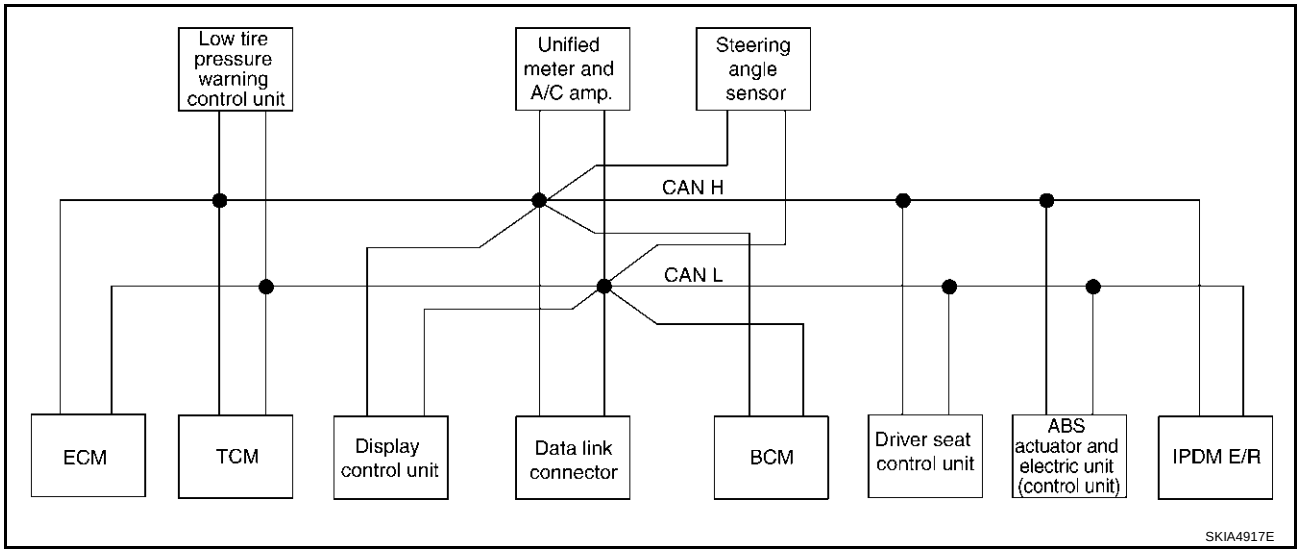

Input/output Signal Chart

T: Transmit R: Receive

Signals	ECM	TCM	Low tire pressure warning control unit	Display unit	Display control unit	BCM	Unified meter and A/C amp.	Steering angle sensor	Driver seat control unit	ABS actuator and electric unit (control unit)	IPDM E/R
Engine speed signal	T	R			R	R	R			R	
Engine status signal	T					R					
Engine coolant temperature signal	T						R				
Engine and CVT integrated control signal	T	R									
	R	T									
Accelerator pedal position signal	T	R								R	
Closed throttle position signal	T	R									
Wide open throttle position signal	T	R									
Key switch signal						T			R		
Ignition switch signal						T			R		R
P range signal		T							R	R	
Stop lamp switch signal		R					T				
VDC operation signal		R								T	
Second position indicator signal		T					R			R	
Second position signal		R					T				
Fuel consumption monitor signal	T						R				
CVT self-diagnosis signal	R	T									
Input shaft revolution signal	R	T								R	
Output shaft revolution signal	R	T								R	
Air conditioner switch signal	R					T					
A/C compressor request signal	T										R
A/C compressor feedback signal	T						R				
Blower fan motor switch signal	R					T					
A/C control signal				T	T		R				
				R	R		T				
Cooling fan speed request signal	T										R
Position lights request signal						T	R				R
Low beam request signal						T					R
Low beam status signal	R										T
High beam request signal						T	R				R
High beam status signal	R										T
Front fog lights request signal						T					R
Vehicle speed signal		R					R			T	
	R		R		R	R	T		R		
Sleep request 1 signal						T	R				
Sleep request 2 signal						T					R

Signals	ECM	TCM	Low tire pressure warning control unit	Display unit	Display control unit	BCM	Unified meter and A/C amp.	Steering angle sensor	Driver seat control unit	ABS actuator and electric unit (control unit)	IPDM E/R
Door switch signal						R	T				
				R	R	T	R		R		R
Turn indicator signal						T	R				
Key fob ID signal						T			R		
Key fob door unlock signal						T			R		
Seat belt buckle switch signal						R	T				
Oil pressure switch signal						R					T
						T	R				
Buzzer output signal						T	R				
Fuel level sensor signal	R						T				
Fuel level low warning signal				R	R		T				
Malfunction indicator signal	T						R				
ASCD SET lamp signal	T						R				
ASCD CRUISE lamp signal	T						R				
Front wiper request signal						T					R
Front wiper stop position signal						R					T
Rear window defogger switch signal						T					R
Rear window defogger control signal	R			R	R						T
Hood switch signal						R					T
Theft warning horn request signal						T					R
Horn chirp signal						T					R
Steering angle sensor signal								T		R	
Tire pressure signal			T				R				
Tire pressure data signal			T	R	R						
CVT position indicator signal		T					R			R	
ABS warning lamp signal							R			T	
VDC OFF indicator lamp signal							R			T	
SLIP indicator lamp signal							R			T	
Brake warning lamp signal							R			T	
System setting signal				T	T				R		
Parking brake switch signal						R	T				

CAN Communication Unit For AWD Models

AKS007PQ

Body type	Wagon															
Axle	AWD															
Engine	VQ35DE															
Transmission	CVT															
Brake control	ABS								VDC							
Low tire pressure warning system		×			×	×		×		×			×	×		×
Navigation system			×		×		×	×			×		×		×	×
Automatic drive positioner				×		×	×	×				×		×	×	×
CAN communication unit																
ECM	×	×	×	×	×	×	×	×	×	×	×	×	×	×	×	×
TCM	×	×	×	×	×	×	×	×	×	×	×	×	×	×	×	×
Low tire pressure warning control unit		×			×	×		×		×			×	×		×
Display unit	×	×		×		×			×	×		×		×		
Display control unit			×		×		×	×			×		×		×	×
Data link connector	×	×	×	×	×	×	×	×	×	×	×	×	×	×	×	×
BCM	×	×	×	×	×	×	×	×	×	×	×	×	×	×	×	×
Unified meter and A/C amp.	×	×	×	×	×	×	×	×	×	×	×	×	×	×	×	×
Steering angle sensor									×	×	×	×	×	×	×	×
Driver seat control unit				×		×	×	×				×		×	×	×
AWD control unit	×	×	×	×	×	×	×	×	×	×	×	×	×	×	×	×
ABS actuator and electric unit (control unit)	×	×	×	×	×	×	×	×	×	×	×	×	×	×	×	×
IPDM E/R	×	×	×	×	×	×	×	×	×	×	×	×	×	×	×	×
CAN communication type	DI-89, "TYPE 17/TYPE 18/TYPE 19/TYPE 20/ TYPE 21/TYPE 22/TYPE 23/TYPE 24"								DI-95, "TYPE 25/TYPE26/TYPE 27/TYPE 28/ TYPE 29/TYPE 30/TYPE 31/TYPE 32"							

×: Applicable

TYPE 17/TYPE 18/TYPE 19/TYPE 20/TYPE 21/TYPE 22/TYPE 23/TYPE 24

System Diagram

- Type17

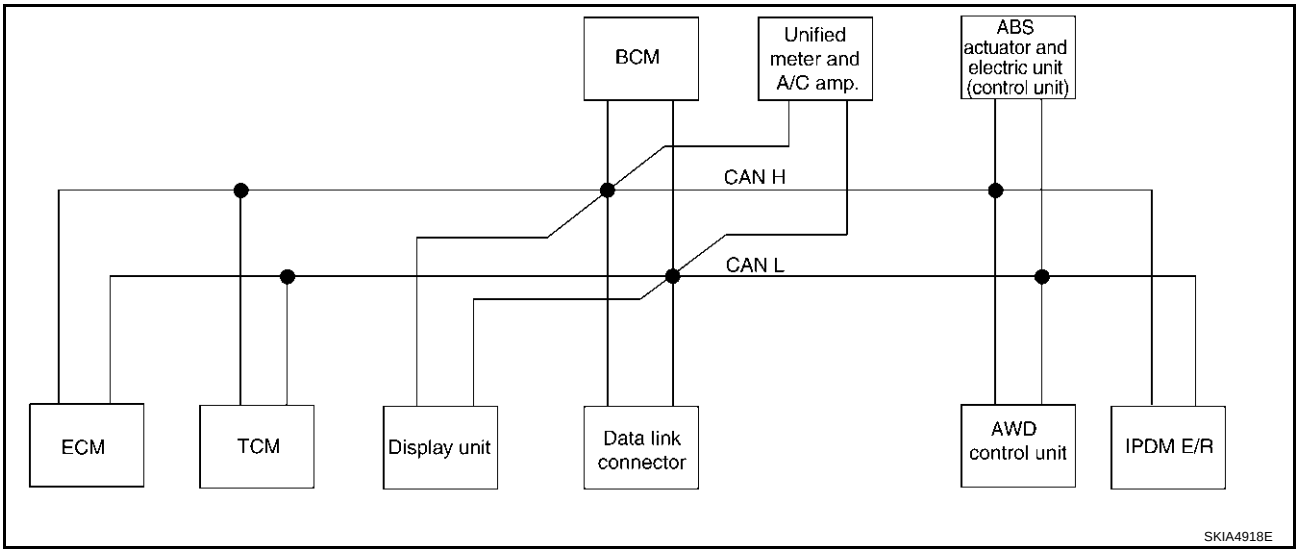

- Type18

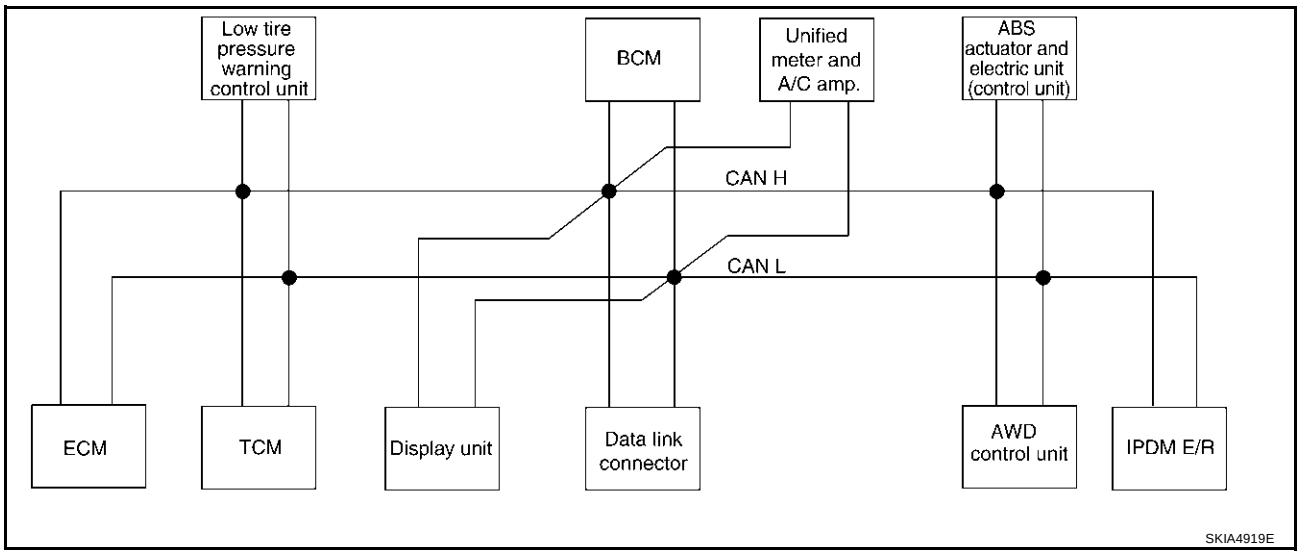

- Type19

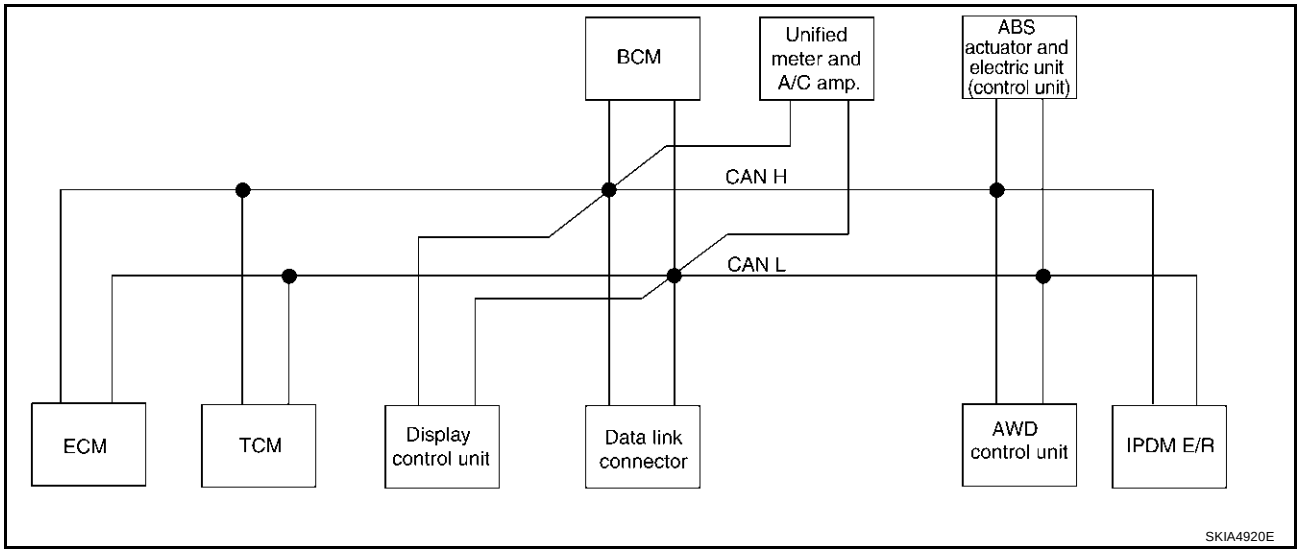

- Type20

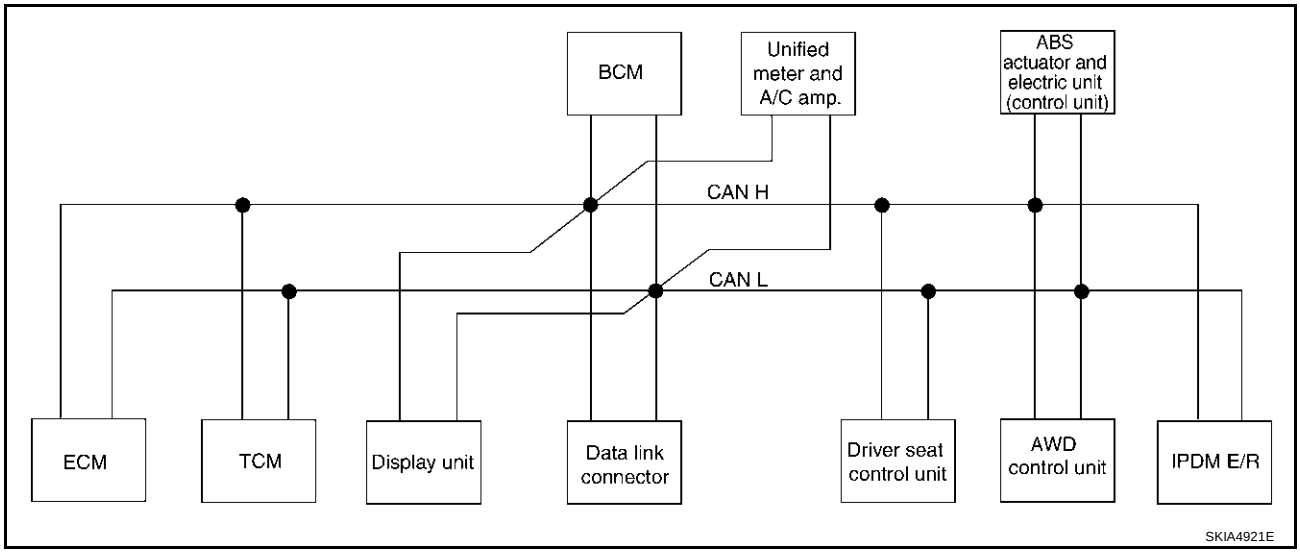

- Type21

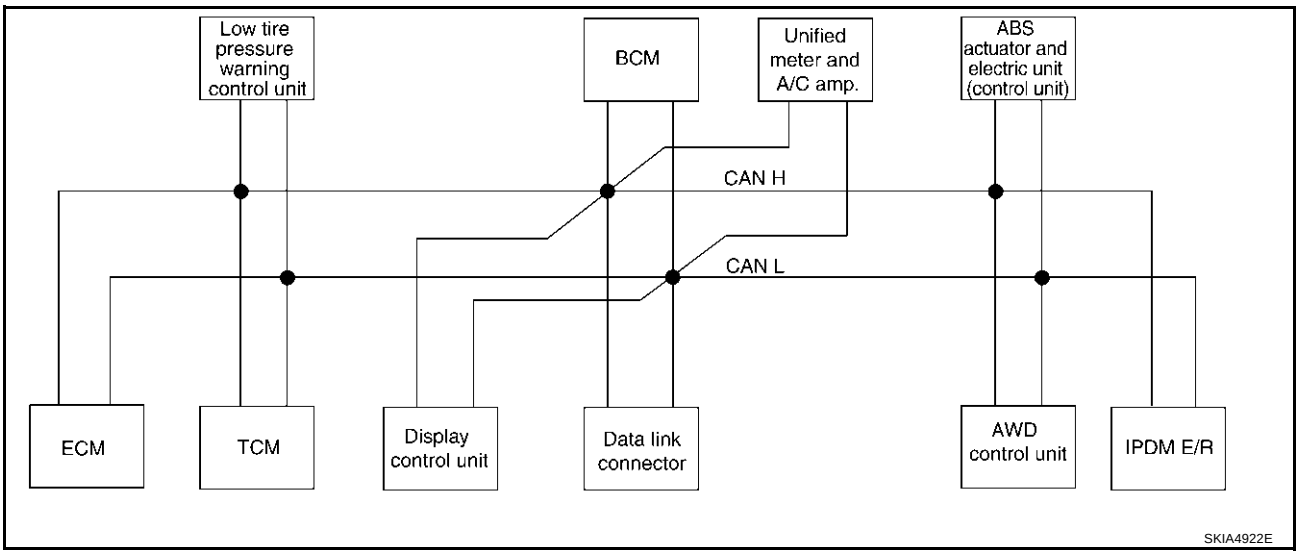

- Type22

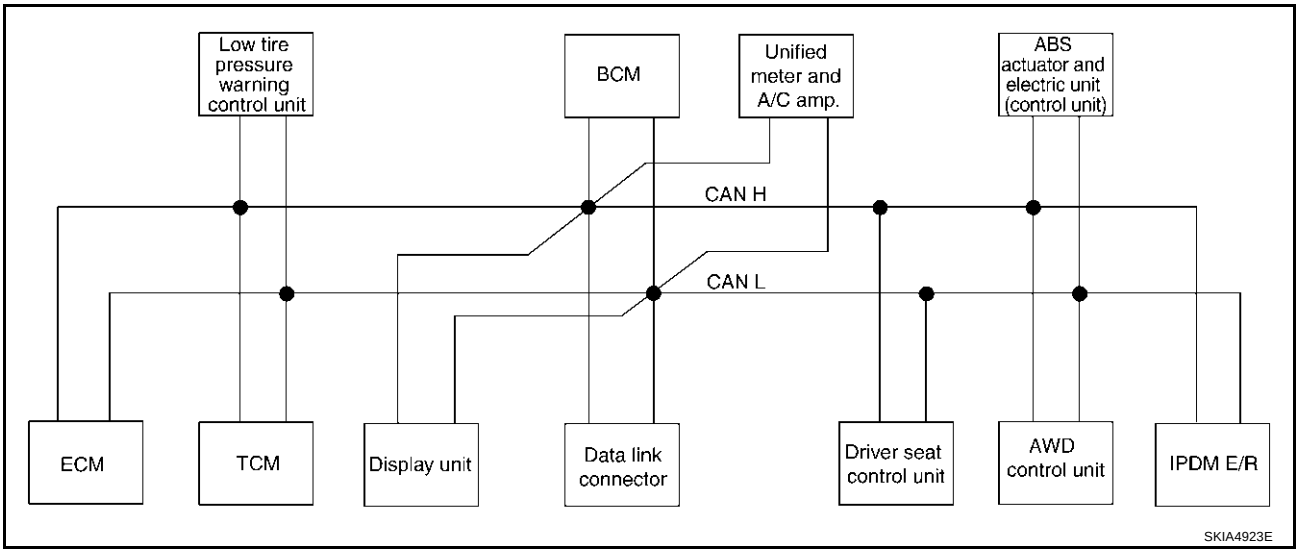

- Type23

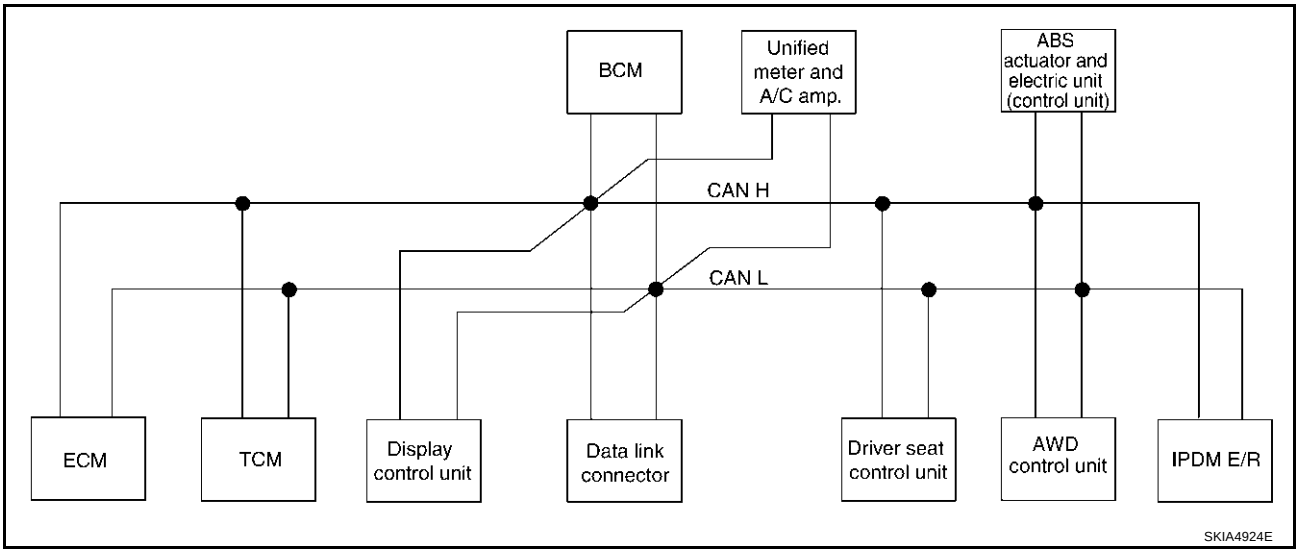

- Type24

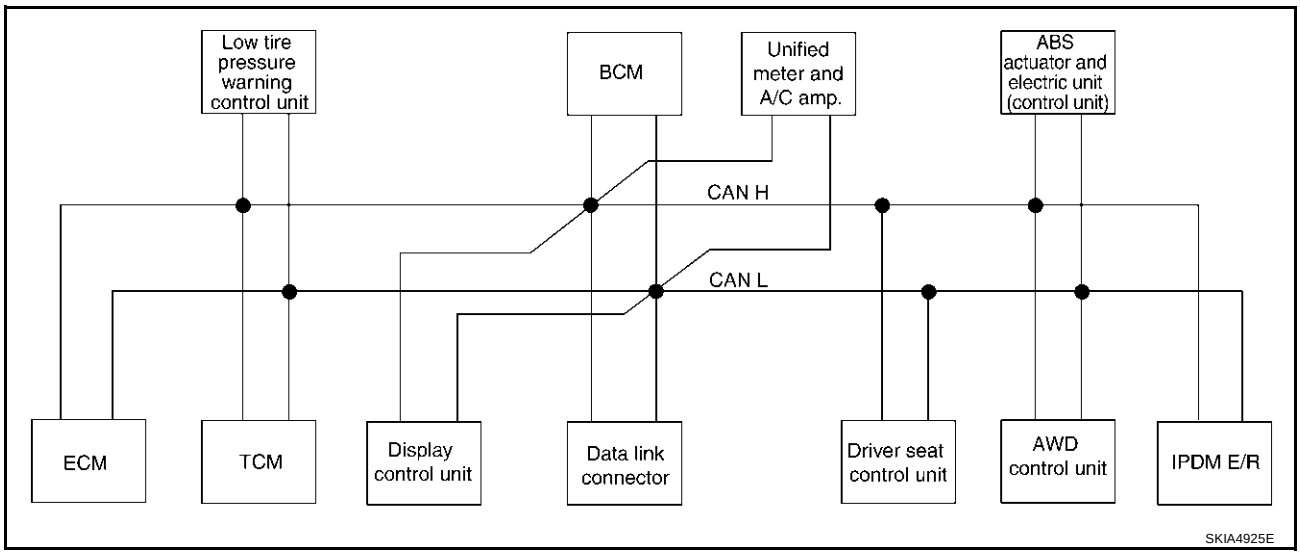
Low tire pressure warning control unit
BCM
Unified meter and A/C amp.
ABS actuator and electric unit (control unit)
CAN H
CAN L
ECM
TCM
Display control unit
Data link connector
Driver seat control unit
AWD control unit
IPDM E/R
SKIA4925E

Input/output Signal Chart

T: Transmit R: Receive

Signals	ECM	TCM	Low tire pressure warning control unit	Display unit	Display control unit	BCM	Unified meter and A/C amp.	Driver seat control unit	AWD control unit	ABS actuator and electric unit (control unit)	IPDM E/R
CVT position indicator signal		T					R				
Second position signal		R					T				
Second position indicator signal		T					R				
Engine speed signal	T	R	R		R	R	R		R		
Engine status signal	T					R					
Engine coolant temperature signal	T						R				
Accelerator pedal position signal	T	R							R		
Closed throttle position signal	T	R									
Wide open throttle position signal	T	R									
Key switch signal						T		R			
Ignition switch signal						T		R			R
P range signal		T						R			
Stop lamp switch signal		R					T		R		
Fuel consumption monitor signal	T						R				
CVT self-diagnosis signal	R	T									
ABS operation signal		R							R	T	
Air conditioner switch signal	R					T					
A/C compressor request signal	T										R
A/C compressor feedback signal	T						R				
Blower fan motor switch signal	R					T					
A/C control signal				T	T		R				
				R	R		T				
Cooling fan speed request signal	T										R
Position lights request signal						T	R				R
Low beam request signal						T					R
Low beam status signal	R										T
High beam request signal						T	R				R
High beam status signal	R										T
Front fog lights request signal						T					R
Vehicle speed signal		R					R		R	T	
	R		R		R	R	T	R			
Sleep request 1 signal						T	R				
Sleep request 2 signal						T					R
Door switch signal						R	T				
				R	R	T	R	R			R
Key fob ID signal						T		R			
Key fob door unlock signal						T		R			

Signals	ECM	TCM	Low tire pressure warning control unit	Display unit	Display control unit	BCM	Unified meter and A/C amp.	Driver seat control unit	AWD control unit	ABS actuator and electric unit (control unit)	IPDM E/R
Turn indicator signal						T	R				
Seat belt buckle switch signal						R	T				
Oil pressure switch signal						R					T
						T	R				
Buzzer output signal						T	R				
Fuel level sensor signal	R						T				
Fuel level low warning signal				R	R		T				
Malfunction indicator lamp signal	T						R				
ASCD SET lamp signal	T						R				
ASCD CRUISE lamp signal	T						R				
Input shaft revolution signal	R	T									
Output shaft revolution signal	R	T									
Front wiper request signal						T					R
Front wiper stop position signal						R					T
Rear window defogger switch signal						T					R
Rear window defogger control signal	R			R	R						T
Engine and CVT integrated control signal	T	R									
	R	T									
Hood switch signal						R					T
Theft warning horn request signal						T					R
Horn chirp signal						T					R
Tire pressure signal			T				R				
Tire pressure data signal			T	R	R						
ABS warning lamp signal							R			T	
Brake warning lamp signal							R			T	
System setting signal				T	T			R			
AWD warning lamp signal							R		T		
AWD lock indicator lamp signal							R		T		
AWD lock switch signal							T		R		
Parking brake switch signal						R	T		R		

TYPE 25/TYPE26/TYPE 27/TYPE 28/TYPE 29/TYPE 30/TYPE 31/TYPE 32

System Diagram

- Type25

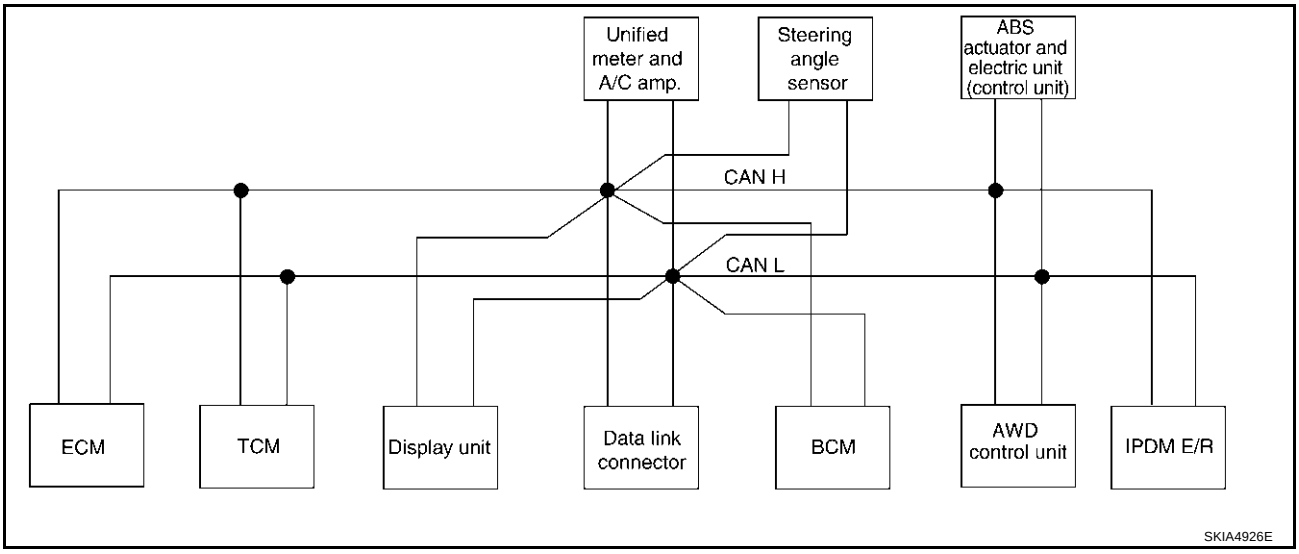

- Type26

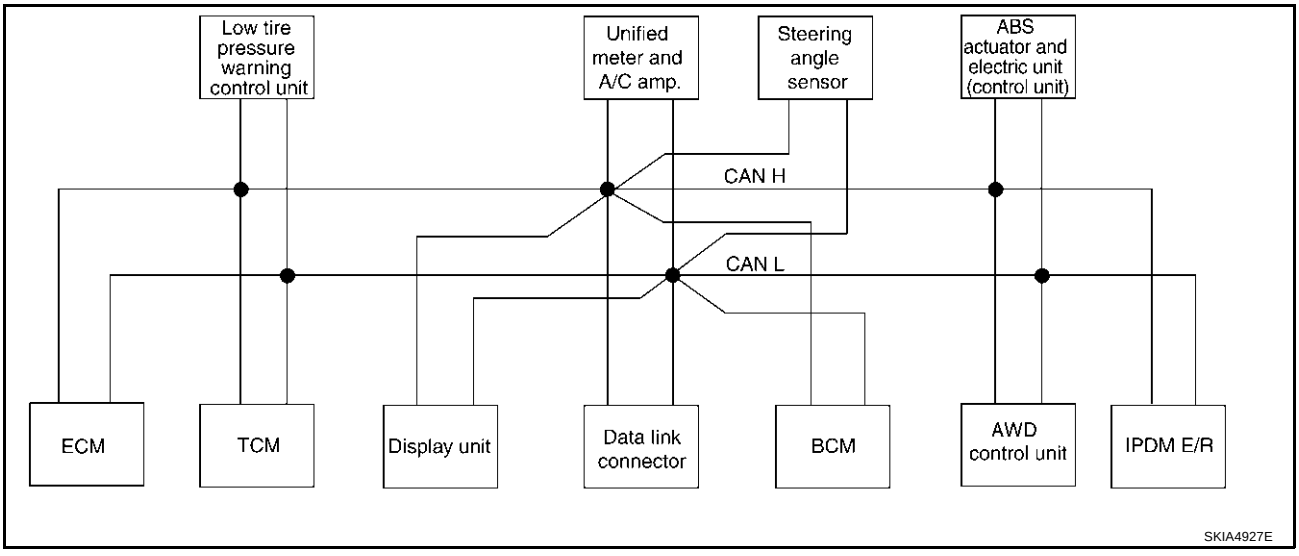

- Type27

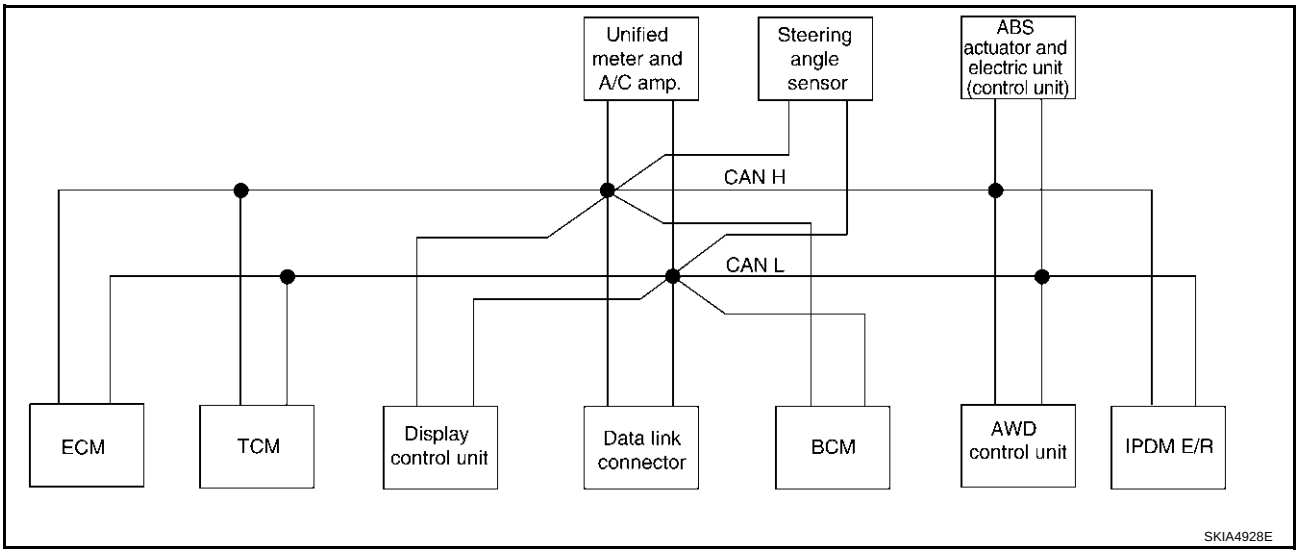

- Type28

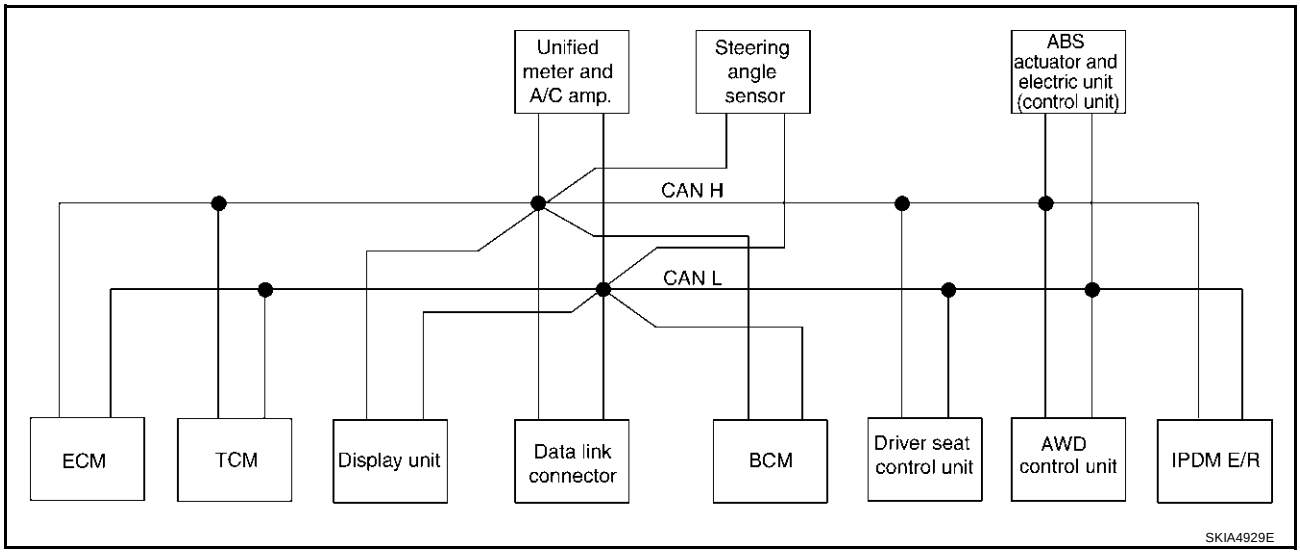

- Type29

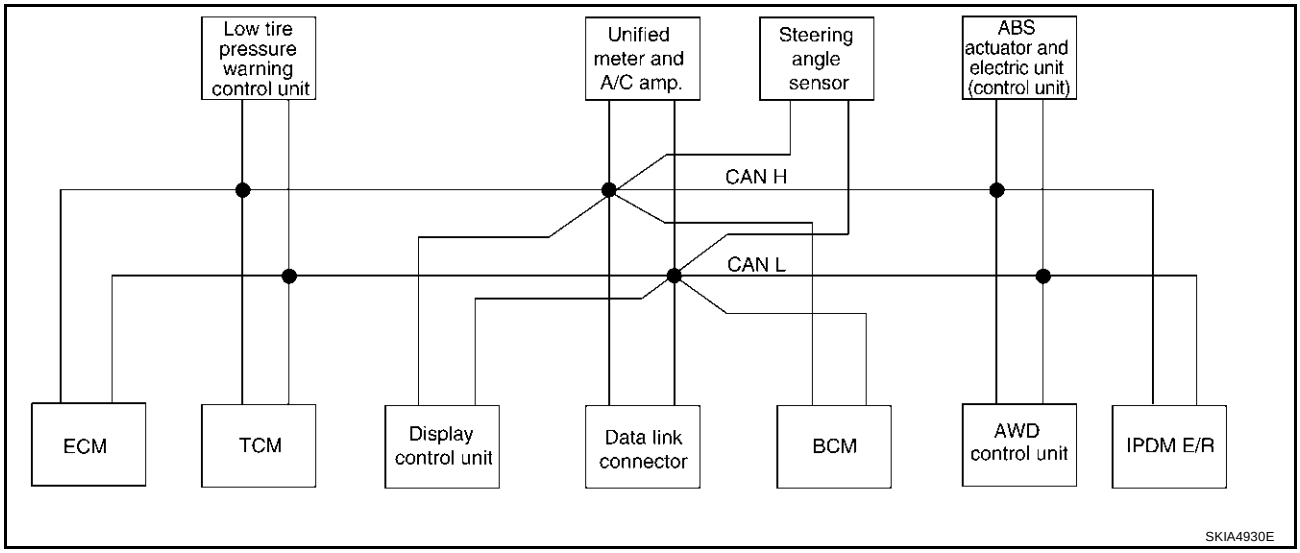

- Type30

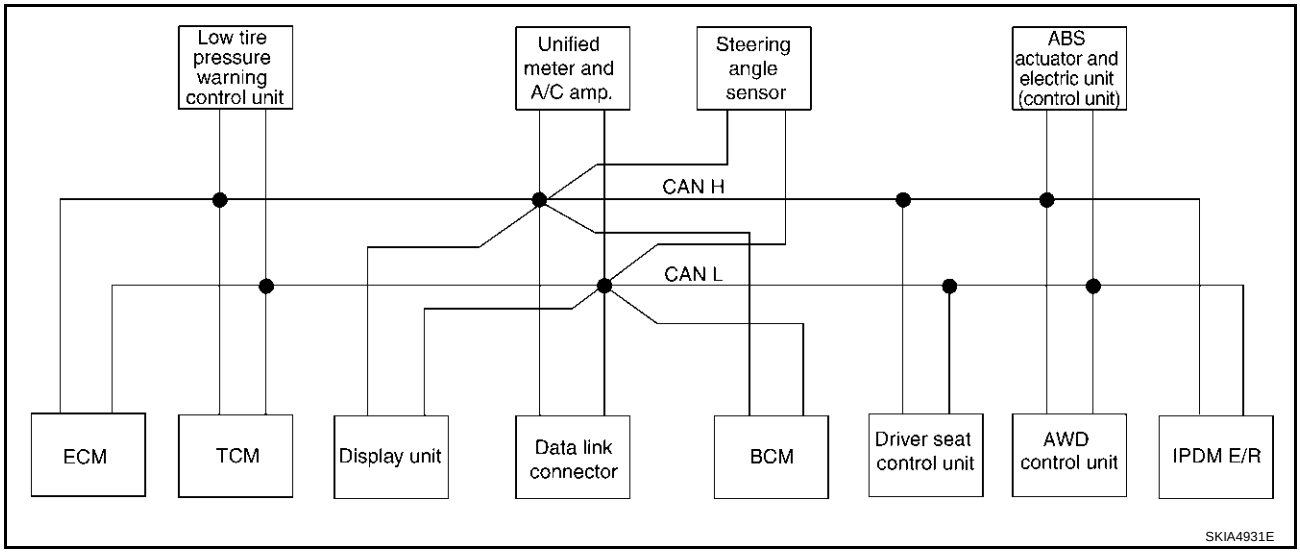

- Type31

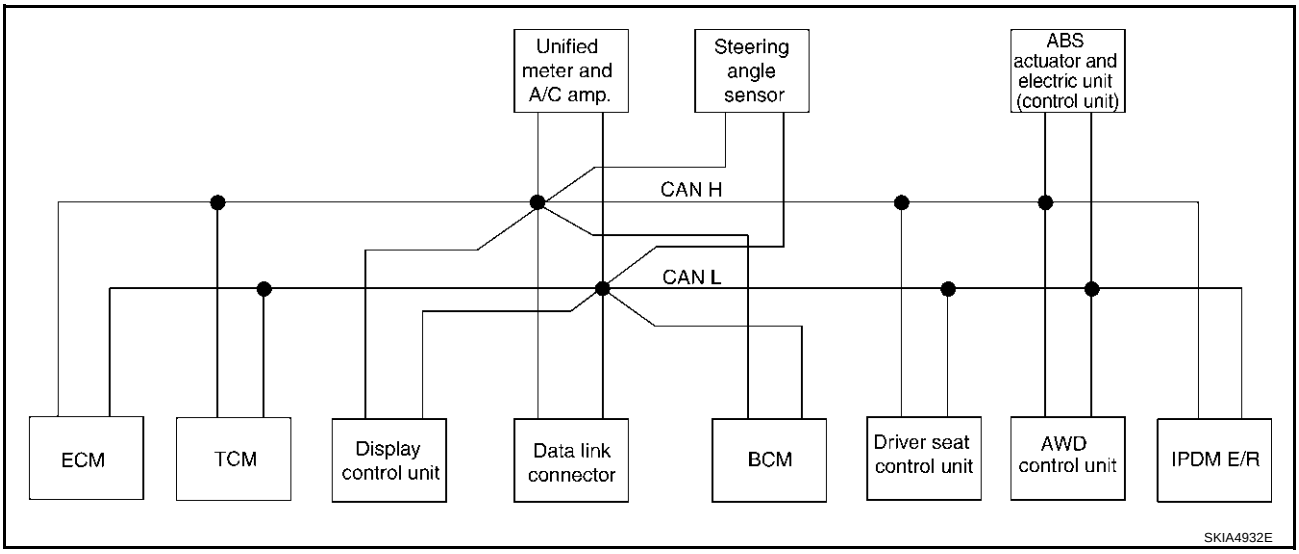

- Type32

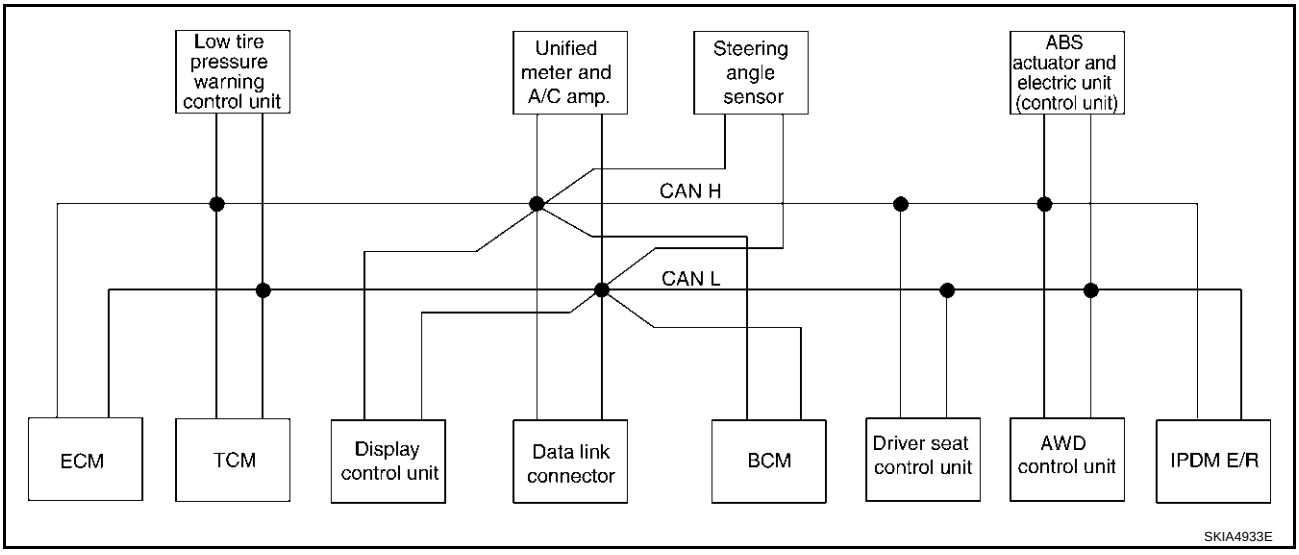

Input/output Signal Chart

T: Transmit R: Receive

Signals	ECM	TCM	Low tire pressure warning control unit	Display unit	Display control unit	BCM	Unified meter and A/C amp.	Steering angle sensor	Driver seat control unit	AWD control unit	ABS actuator and electric unit (control unit)	IPDM E/R
Engine and CVT integrated control signal	T	R										
	R	T										
Second position signal		R					T					
VDC operation signal		R								R	T	
Stop lamp switch signal		R					T			R		
Key switch signal						T			R			
Ignition switch signal						T			R			R
P range signal		T							R		R	
Closed throttle position signal	T	R										
Wide open throttle position signal	T	R										
Second position indicator signal		T					R				R	
Engine speed signal	T	R			R	R	R			R	R	
Engine status signal	T					R						
Engine coolant temperature signal	T						R					
Accelerator pedal position signal	T	R								R	R	
Fuel consumption monitor signal	T						R					
CVT self-diagnosis signal	R	T										
Input shaft revolution signal	R	T									R	
Output shaft revolution signal	R	T									R	
Air conditioner switch signal	R					T						
A/C compressor request signal	T											R
A/C compressor feedback signal	T						R					T
Blower fan motor switch signal	R					T						
A/C control signal				T	T		R					
				R	R		T					
Cooling fan speed request signal	T											R
Position lights request signal						T	R					R
Low beam request signal						T						R
Low beam status signal	R											T
High beam request signal						T	R					R
High beam status signal	R											T
Front fog lights request signal						T						R
Vehicle speed signal		R					R			R	T	
	R		R		R	R	T		R			
Sleep request 1 signal						T	R					
Sleep request 2 signal						T						R

Signals	ECM	TCM	Low tire pressure warning control unit	Display unit	Display control unit	BCM	Unified meter and A/C amp.	Steering angle sensor	Driver seat control unit	AWD control unit	ABS actuator and electric unit (control unit)	IPDM E/R
Door switch signal						R	T					
				R	R	T	R		R			R
Turn indicator signal						T	R					
Key fob ID signal						T			R			
Key fob door unlock signal						T			R			
Seat belt buckle switch signal						R	T					
Oil pressure switch signal						R						T
						T	R					
Buzzer output signal						T	R					
Fuel level sensor signal	R						T					
Fuel level low warning signal				R	R		T					
Malfunction indicator signal	T						R					
ASCD SET lamp signal	T						R					
ASCD CRUISE lamp signal	T						R					
Front wiper request signal						T						R
Front wiper stop position signal						R						T
Rear window defogger switch signal						T						R
Rear window defogger control signal	R			R	R							T
Hood switch signal						R						T
Theft warning horn request signal						T						R
Horn chirp signal						T						R
Steering angle sensor signal								T			R	
Tire pressure signal			T				R					
Tire pressure data signal			T	R	R							
CVT position indicator signal		T					R				R	
ABS warning lamp signal							R				T	
VDC OFF indicator lamp signal							R				T	
SLIP indicator lamp signal							R				T	
Brake warning lamp signal							R				T	
System setting signal				T	T				R			
AWD warning lamp signal							R			T		
AWD lock indicator lamp signal							R			T		
AWD lock switch signal							T			R		
Parking brake switch signal						R	T			R		

Wiring Diagram — CHIME —

AKS004H3

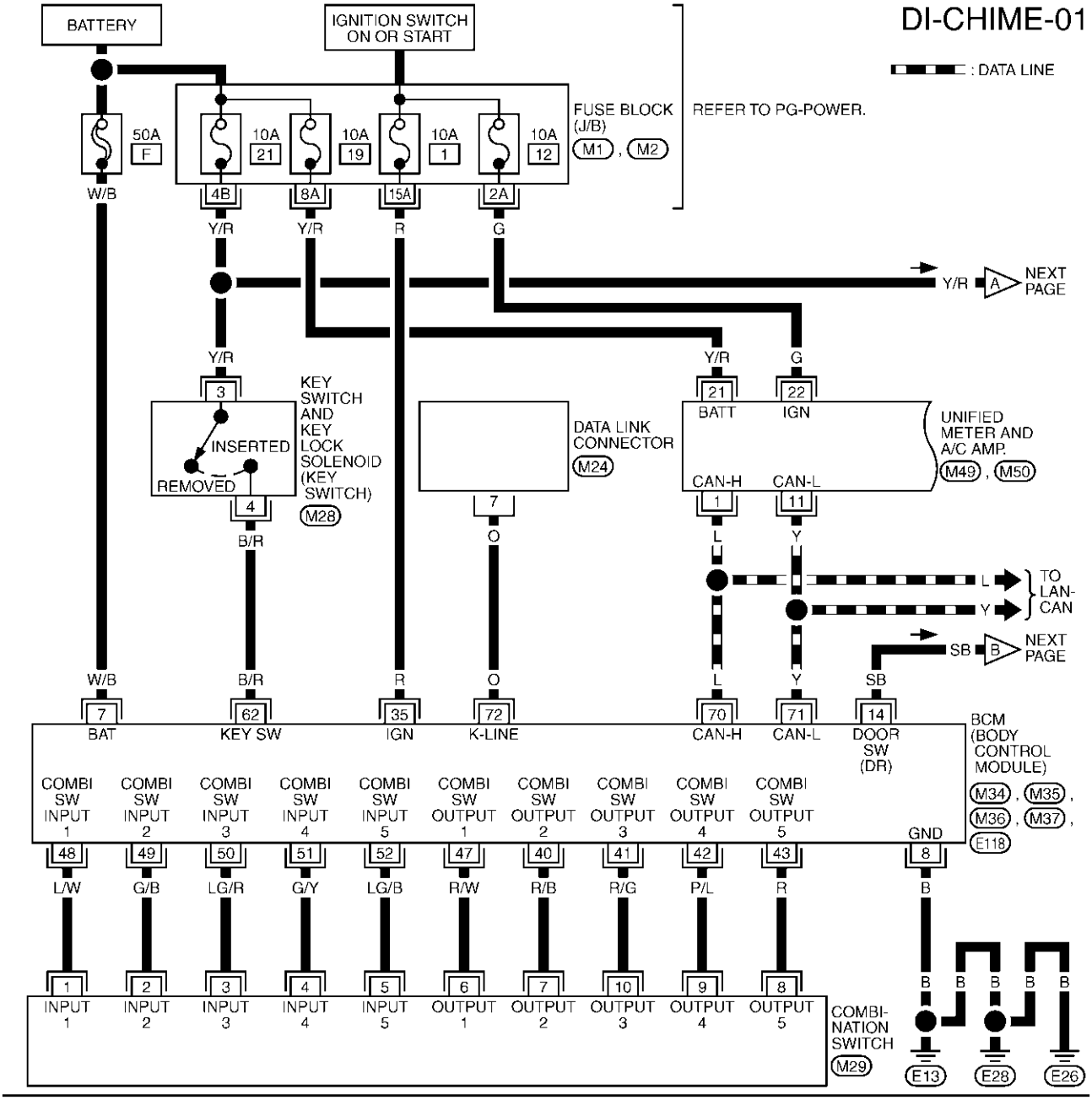

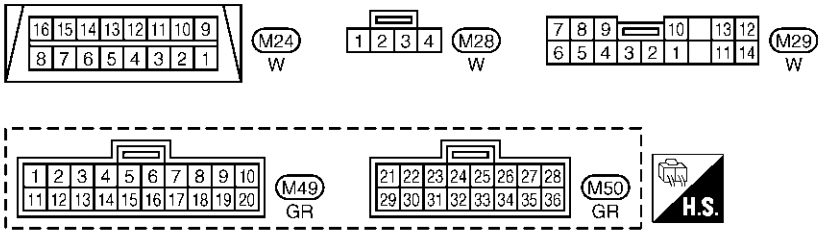

REFER TO THE FOLLOWING.
M1 , M2 -FUSE BLOCK-JUNCTION BOX (J/B)
M34 , M35 , M36 , M37 , E118 -ELECTRICAL UNITS

TKWA1169E

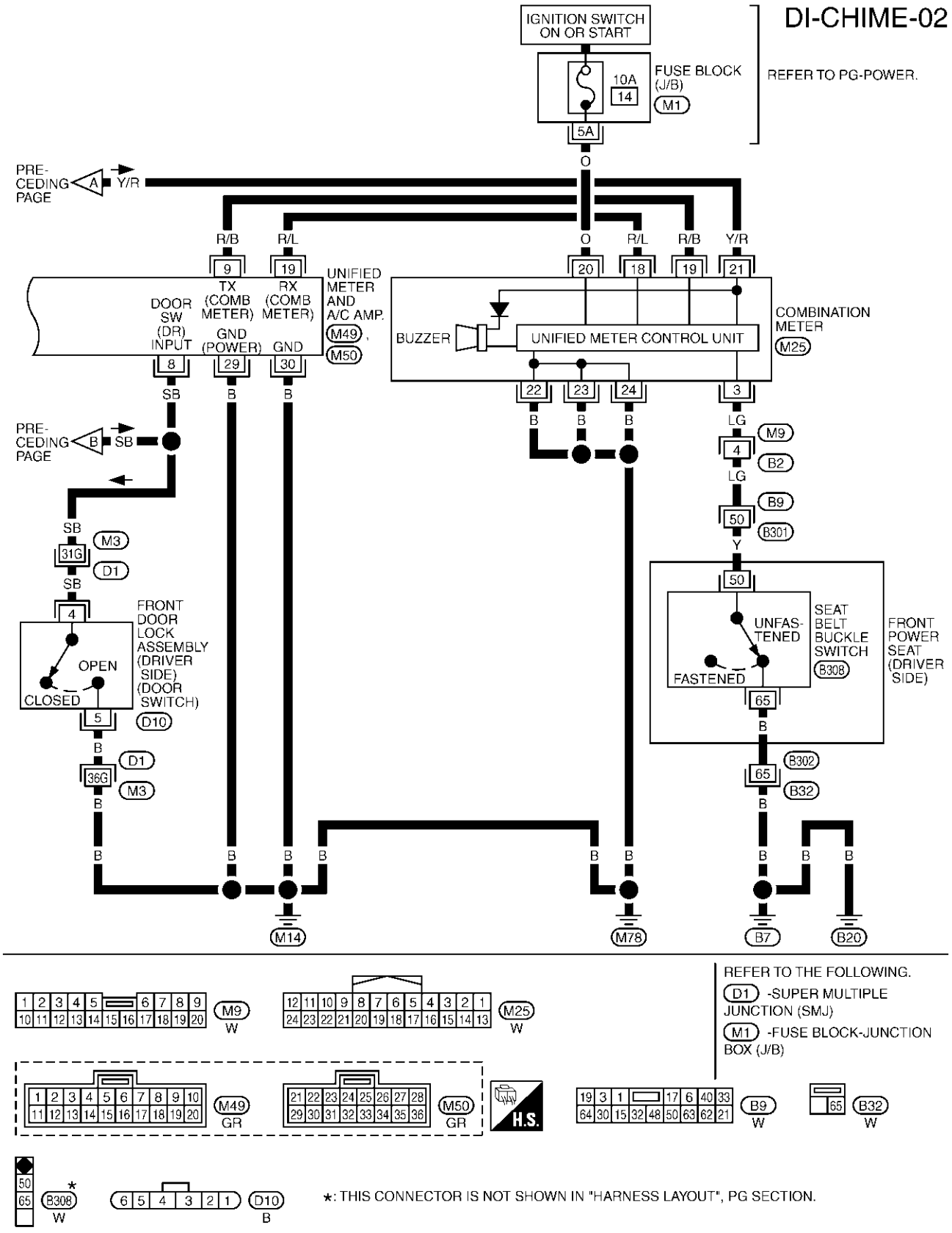
DI-CHIME-02
IGNITION SWITCH ON OR START
FUSE BLOCK (J/B)
M1
10A
14
5A
REFER TO PG-POWER.
PRE-CEDING PAGE
A
Y/R
O
R/B
R/L
Y/R
9
19
20
18
19
21
UNIFIED METER AND A/C AMP.
M49
M50
DOOR SW (DR) INPUT
TX (COMB METER)
RX (COMB METER)
GND (POWER)
GND
8
29
30
BUZZER
UNIFIED METER CONTROL UNIT
COMBINATION METER
M25
22
23
24
3
SB
B
LG
M9
4
B2
B9
50
B301
Y
PRE-CEDING PAGE
B
M3
31G
D1
FRONT DOOR LOCK ASSEMBLY (DRIVER SIDE) (DOOR SWITCH)
OPEN
CLOSED
5
D10
36G
SEAT BELT BUCKLE SWITCH
UNFAS-TENED
FASTENED
B308
FRONT POWER SEAT (DRIVER SIDE)
65
B302
B32
M14
M78
B7
B20
REFER TO THE FOLLOWING.
D1 -SUPER MULTIPLE JUNCTION (SMJ)
M1 -FUSE BLOCK-JUNCTION BOX (J/B)
M9
W
M25
W
M49
GR
M50
GR
H.S.
B9
W
B32
W
B308
W
D10
B
*: THIS CONNECTOR IS NOT SHOWN IN "HARNESS LAYOUT", PG SECTION.
TKWA0830E

Terminals and Reference Value for BCM

AKS004H4

Terminal No.	Wire color	Item	Measuring condition		Reference value (V)
			Ignition switch	Operation or condition	
7	W/B	Battery power supply	OFF	—	Battery voltage
8	B	Ground	ON	—	Approx. 0
14	SB	Driver side door switch signal	OFF	ON (open)	Approx. 0
				OFF (closed)	Approx. 5
35	R	Ignition switch ON or START	ON	—	Battery voltage
40	R/B	Combination switch output 2	ON	—	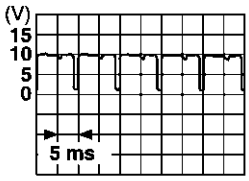 SKIA1119J
41	R/G	Combination switch output 3			
42	P/L	Combination switch output 4			
43	R	Combination switch output 5			
47	R/W	Combination switch output 1			
48	L/W	Combination switch input 1	ON	Lighting switch and wiper switch are OFF.	4.5 or more
49	G/B	Combination switch input 2			
50	LG/R	Combination switch input 3			
51	G/Y	Combination switch input 4			
52	LG/B	Combination switch input 5			
62	B/R	Key switch signal	OFF	Key is removed	Approx. 0
				Key is inserted	Approx. 12
70	L	CAN H	OFF	—	—
71	Y	CAN L	OFF	—	—

Terminals and Reference Value for Unified Meter and A/C Amp.

AKS004H5

Terminal No.	Wire color	Item	Measuring or condition		Reference value (V)
			Ignition switch	Operation or condition	
1	L	CAN H	OFF	—	—
8	SB	Driver side door switch signal	OFF	ON (open)	Approx. 0
				OFF (closed)	Battery voltage
9	R/B	TX communication line (To combination meter)	ON	—	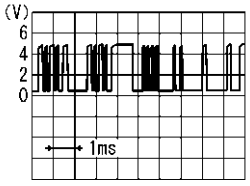 SKIA3362E
11	Y	CAN L	OFF	—	—
19	R/L	RX communication line (From combination meter)	ON	—	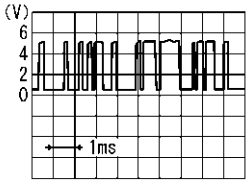 SKIA3361E
21	Y/R	Battery power supply	OFF	—	Battery voltage
22	G	Ignition switch ON or START	ON	—	Battery voltage

Terminal No.	Wire color	Item	Measuring or condition		Reference value (V)
			Ignition switch	Operation or condition	
29	B	Ground (power)	ON	—	Approx. 0
30	B	Ground	ON	—	Approx. 0

Terminals and Reference Value for Combination Meter

AKS004H6

Terminal No.	Wire color	Item	Measuring condition		Reference value (V)
			Ignition switch	Operation or condition	
3	LG	Seat belt buckle switch (Driver side)	ON	Unfastened (ON)	Approx. 0
				Fastened (OFF)	Approx.12
18	R/L	TX communication line (To unified meter and A/C amp.)	ON	—	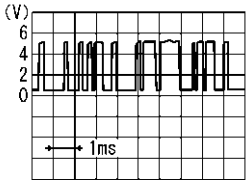 SKIA3361E
19	R/B	RX communication line (From unified meter and A/C amp.)	ON	—	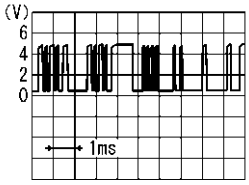 SKIA3362E
20	O	Ignition switch ON or START	ON	—	Battery voltage
21	Y/R	Battery power supply	OFF	—	Battery voltage
22	B	Ground	ON	—	Approx. 0
23					
24					

How to Proceed With Trouble Diagnosis

AKS004H7

1. Confirm the symptom or customer complaint.
2. Understand operation description and function description. Refer to DI-76, "System Description" .
3. Perform the preliminary check. Refer to DI-104, "Preliminary Check" .
4. Start engine.
5. Select “METER A/C AMP” on CONSULT-II, and perform self-diagnosis of unified meter and A/C amp. Refer to DI-57, "CONSULT-II Function" .
6. After erasing the self-diagnosis result, perform self-diagnosis again. When no malfunction detected, go to next step 7. When malfunction detected, go to DI-18, "Symptom Chart 2" in “COMBINATION METER”.
7. Check symptom and repair or replace the cause of malfunction.
8. Does the warning chime operate normally? If so, go to 9. If not, go to 7.
9. INSPECTION END

Preliminary Check

AKS004H8

INSPECTION FOR POWER SUPPLY AND GROUND CIRCUIT

1. CHECK FUSE

Check for blown BCM fuses.

Unit	Power source	Fuse No.
BCM	Battery	F
	Ignition switch ON or START	1

Refer to DI-100, "Wiring Diagram — CHIME —" .

OK or NG

OK >> GO TO 2.
NG >> If fuse is blown, be sure to eliminate cause of malfunction before installing new fuse. Refer to PG-3, "POWER SUPPLY ROUTING CIRCUIT" .

2. CHECK POWER SUPPLY CIRCUIT

1. Disconnect BCM connector.
2. Check voltage between BCM harness connector terminals and ground.

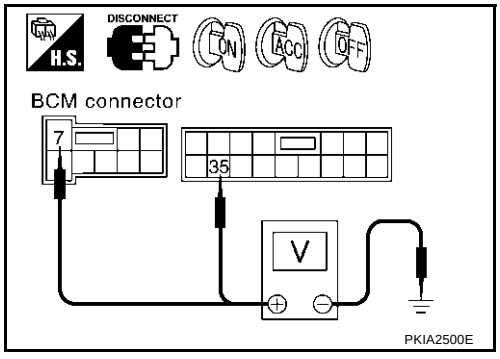

Terminals			Ignition switch position		
(+)		(–)	OFF	ACC	ON
Connector	Terminal (Wire color)				
E118	7 (W/B)	Ground	Battery voltage	Battery voltage	Battery voltage
M35	35 (R)		0V	0V	Battery voltage

OK or NG

OK >> GO TO 3.
NG >> Check harness for open between BCM and fuse.

3. CHECK GROUND CIRCUIT

1. Turn ignition switch OFF.
2. Check continuity between BCM harness connector E118 terminal 8 (B) and ground.

Continuity should exist.

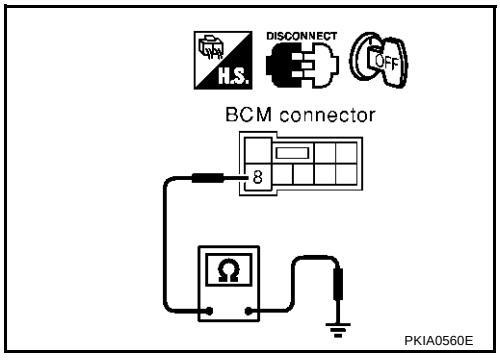

OK or NG

OK >> INSPECTION END
NG >> Repair harness or connector.

CONSULT-II Function

AKS004H9

CONSULT-II executes the following functions by combining data reception and command transmission via the communication line from BCM. Work support, self-diagnosis, data monitor, and active test display.

DIAGNOSTIC ITEMS DESCRIPTION

BCM diagnosis position	Diagnosis mode	Description
KEY WARN ALM	Data monitor	The input data to the BCM control unit is displayed in real time.
	Active test	Operation of electrical loads can be checked by sending driving signal to them.
LIGHT WARN ALM	Data monitor	The input data to the BCM control unit is displayed in real time.
	Active test	Operation of electrical loads can be checked by sending driving signal to them.
SEAT BELT ALM	Data monitor	The input data to the BCM control unit is displayed in real time.
	Active test	Operation of electrical loads can be checked by sending driving signal to them.
BCM C/U	Self-diagnostic	BCM performs self-diagnosis of CAN communication and combination switch.

CONSULT-II BASIC OPERATION PROCEDURE

CAUTION:

If CONSULT-II is used with no connection of CONSULT-II CONVERTER, malfunctions might be detected in self-diagnosis depending on control unit which carry out CAN communication.

1. With the ignition switch OFF, connect “CONSULT-II” and “CONSULT-II CONVERTER” to the data link connector, and turn ignition switch ON.

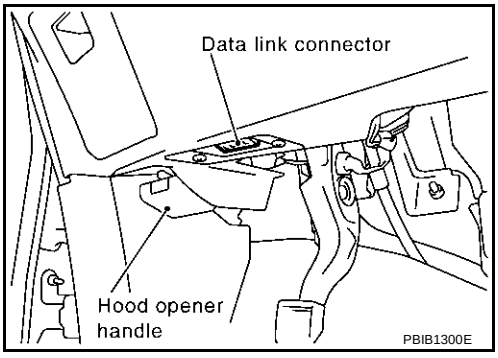

2. Touch “START (NISSAN BASED VHCL)”.

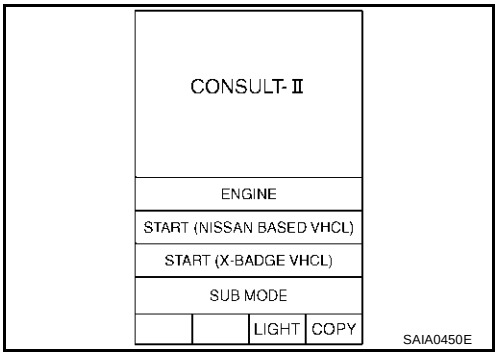

3. Touch “BCM” on “SELECT SYSTEM” screen. If “BCM” is not indicated, go to GI-38, "CONSULT-II Data Link Connector (DLC) Circuit" .

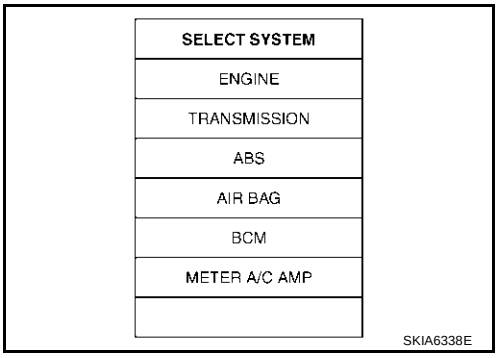

4. Touch “KEY WARN ALM”, “LIGHT WARN ALM”, “SEAT BELT ALM” or “BCM C/U”.
5. Select “DATA MONITOR” “ACTIVE TEST” or “SELF-DIAG RESULTS”.

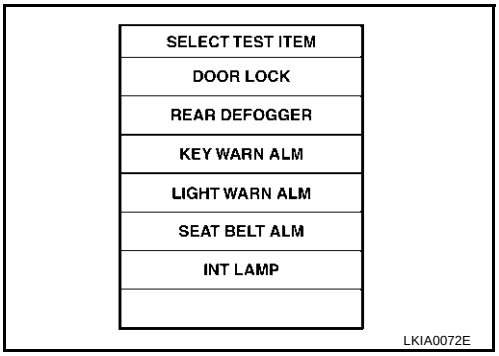

DATA MONITOR

Operation Procedure

1. Touch “IGN WARN ALM”, “LIGHT WARN ALM” or “SEAT BELT ALM” on “SELECT TEST ITEM” screen.
2. Touch “DATA MONITOR” on “SELECT DIAG MODE” screen.
3. Touch “ALL SIGNALS” or “SELECTION FROM MENU” on “DATA MONITOR” screen.

ALL SIGNALS	Monitors main items.
SELECTION FROM MENU	Selects and monitors items.

4. If “SELECTION FROM MENU” is selected, touch the desired monitor item. If “ALL SIGNALS” is selected, all items required to control are monitored.
5. Touch “START”.
6. During monitoring, touching “RECORD” can start recording the monitored item status.

Data Monitor Item (Key Warning Chime)

Monitored item	Description
IGN ON SW	Indicates [ON/OFF] condition of ignition switch.
KEY ON SW	Indicates [ON/OFF] condition of key switch.
DOOR SW-DR	Indicates [ON/OFF] condition of driver side door switch.

Data Monitor Item (Light Warning Chime)

Monitored item	Description
IGN ON SW	Indicates [ON/OFF] condition of ignition switch.
DOOR SW-DR	Indicates [ON/OFF] condition of driver side door switch.
TAIL LAMP SW	Indicates [ON/OFF] condition of lighting switch.

Data Monitor Item (Seat Belt Warning Chime)

Monitored item	Description
IGN ON SW	Indicates [ON/OFF] condition of ignition switch.
SEAT BELT SW	Indicates [ON/OFF] condition of seat belt buckle switch.

ACTIVE TEST

Operation Procedure

1. Touch “IGN WARN ALM”, “LIGHT WARN ALM” or “SEAT BELT ALM” on “SELECT TEST ITEM” screen.
2. Touch “ACTIVE TEST” on “SELECT DIAG MODE” screen.
3. Touch the item to be tested, and check the operation.
4. During the operation check, touching “OFF” deactivates the operation.

Active Test Item (Key Warning Chime)

Test item	Malfunction is detected when…
CHIME	This test is able to check key warning chime operation. Key warning chime sounds for 2 seconds after touching “ON” on CONSULT-II screen.

Active Test Item (Light Warning Chime)

Test item	Malfunction is detected when···
CHIME	This test is able to check light warning chime operation. Light warning chime sounds for 2 seconds after touching “ON” on CONSULT-II screen.

Active Test Item (Seat Belt Warning Chime)

Test item	Malfunction is detected when···
CHIME	This test is able to check seat belt warning chime operation. Seat belt warning chime sounds for 2 seconds after touching “ON” on CONSULT-II screen.

SELF-DIAGNOSTIC RESULTS

Operation Procedure

1. Touch “BCM C/U” on “DIAGNOSIS ITEM SELECTION” screen.
2. Touch “SELF-DIAG RESULTS” on “SELECT DIAG MODE” screen.
3. Self-diagnostic results are displayed.

Display Item List

Monitored Item	CONSULT-II display	Description
CAN communication	CAN communication [U1000]	Malfunction is detected in CAN communication.
Combination switch	Diagnosis 1 - 5 systems open circuit	Malfunction is detected in combination switch system.

NOTE:
If “CAN communication [U1000]” is indicated, after printing the monitor item, go to “CAN system”. Refer to LAN-10, "Precautions When Using CONSULT-II" .

All Warnings Are Not Operated

AKS004HA

1. CHECK CHIME OPERATION

1. Select “BCM” on CONSULT-II.
2. With “KEY WARN ALM”, “LIGHT WARN ALM” or “SEAT BELT ALM”, and perform “CHIME” of “SELECT TEST ITEM”.

Does chime sound?

YES >> Replace BCM. Refer to BCS-36, "Removal and Installation of BCM" .
NO >> GO TO 2.

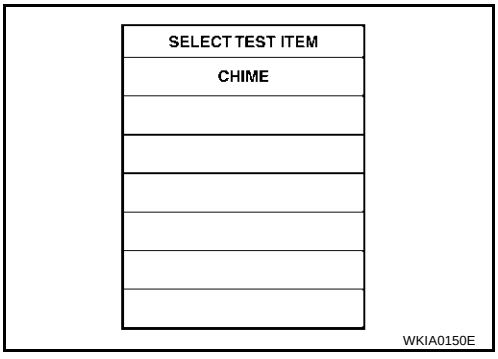

2. CHECK UNIFIED METER AND A/C AMP. INPUT SIGNAL

1. Select “METER A/C AMP” on CONSULT-II.
2. Operate switches meet the requirements to sounds warning chime with “BUZZER” of “DATA MONITOR” and check operation status.

When meet the requirements to sounds warning chime : BUZZER ON

Except above : BUZZER OFF

OK or NG

OK >> Replace combination meter.
NG >> Replace BCM. Refer to BCS-36, "Removal and Installation of BCM" .

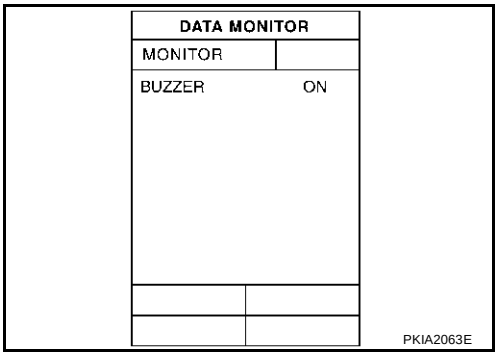

Key Warning Chime and Light Warning Chime Does Not Operate (Seat belt Warning Chime Does Operate)

AKS005GZ

1. CHECK BCM INPUT SIGNAL

1. Select “BCM” on CONSULT-II.
2. With “DATA MONITOR” of “KEY WARN ALM” or “LIGHT WARN ALM”, confirm “DOOR SW-DR” when the driver side door switch is operated.

When driver side door is opened : DOOR SW-DR ON

When driver side door is closed : DOOR SW-DR OFF

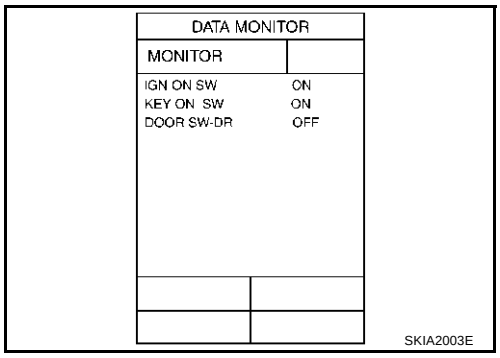

OK or NG

OK >> Replace BCM. Refer to BCS-36, "Removal and Installation of BCM" .

NG >> GO TO 2.

2. CHECK DRIVER SIDE DOOR SWITCH CIRCUIT 1

1. Turn ignition switch OFF.
2. Disconnect unified meter and A/C amp. connector and driver side door switch connector.
3. Check continuity between unified meter and A/C amp. harness connector M49 terminal 8 (SB) and driver side door switch harness connector D10 terminal 4 (SB).

Continuity should exist.

4. Check continuity between unified meter and A/C amp. harness connector M49 terminal 8 (SB) and ground.

Continuity should not exist.

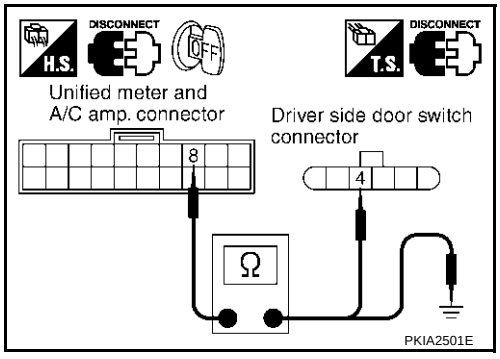

OK or NG

OK >> GO TO 3.

NG >> Repair harness or connector.

3. CHECK DRIVER SIDE DOOR SWITCH CIRCUIT 2

1. Disconnect BCM connector.
2. Check continuity between BCM harness connector M34 terminal 14 (SB) and driver side door switch harness connector D10 terminal 4 (SB).

Continuity should exist.

3. Check continuity between BCM harness connector M34 terminal 14 (SB) and ground.

Continuity should not exist.

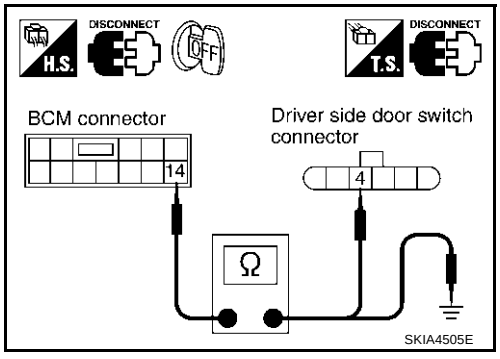

OK or NG

OK >> GO TO 4.

NG >> Repair harness or connector.

4. CHECK DRIVER SIDE DOOR SWITCH

Check continuity between driver side door switch connector terminals 4 and 5 while turning the door switch ON (open) and OFF (closed).

Connector	Terminal		Condition	Continuity
D10	4	5	Driver side door open (ON)	Yes
			Driver side door closed (OFF)	No

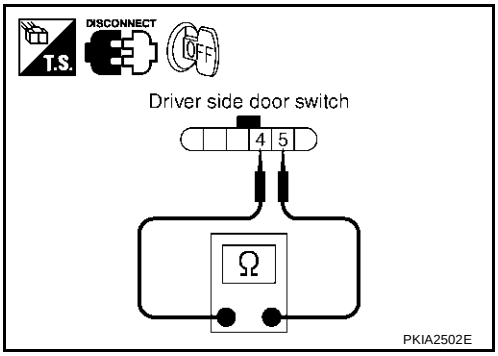

OK or NG

OK >> GO TO 5.
NG >> Replace driver side door switch.

5. CHECK DRIVER SIDE DOOR SWITCH GROUND CIRCUIT

Check continuity between driver side door switch harness connector D10 terminal 5 (B) and ground.

Continuity should exist.

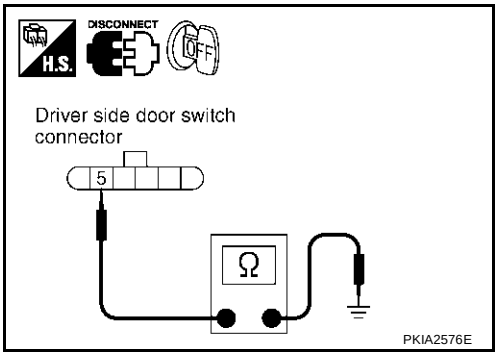

OK or NG

OK >> Replace BCM. Refer to BCS-36, "Removal and Installation of BCM" .
NG >> Repair harness.

Key Warning Chime Does Not Operate

AKS004HB

1. CHECK FUSE

Check if the key switch fuse is blown. Refer to DI-100, "Wiring Diagram — CHIME —" .

Is the fuse blown?

YES >> Replace fuse. Be sure to repair the cause of malfunction before installing new fuse.
NO >> GO TO 2.

2. CHECK WARNING CHIME OPERATION

Check the chime under conditions in exception of key warning chime operation.

Does warning chime sound?

YES >> GO TO 3.
NO >> Go to DI-107, "All Warnings Are Not Operated" or DI-108, "Key Warning Chime and Light Warning Chime Does Not Operate (Seat belt Warning Chime Does Operate)" .

3. CHECK BCM INPUT SIGNAL

With CONSULT-II

1. Select “BCM”.
2. With “DATA MONITOR” of “IGN WARN ALM”, confirm “KEY ON SW” when the key is operated.

When key is inserted to ignition key cylinder : KEY ON SW ON

When key is removed from ignition key cylinder : KEY ON SW OFF

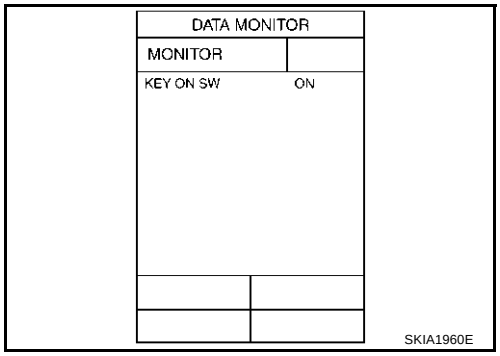

Without CONSULT-II

Check voltage between BCM harness connector M37 terminal 62 (B/R) and ground.

Terminals			Condition	Voltage (V)
(+)		(–)		
Connector	Terminal (Wire color)			
M37	62 (B/R)	Ground	Key is inserted	Approx. 12
			Key is removed	Approx. 0

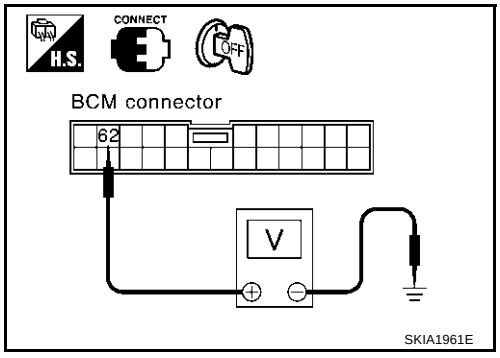

OK or NG

OK >> Replace BCM. Refer to BCS-36, "Removal and Installation of BCM" .
NG >> GO TO 4.

4. CHECK KEY SWITCH

1. Turn ignition switch OFF.
2. Disconnect key switch and key lock solenoid connector.
3. Check continuity between key switch and key lock solenoid connector M28 terminals 3 and 4.

Terminal		Condition	Continuity
3	4	Key is inserted	Yes
		Key is removed	No

OK or NG

OK >> GO TO 5.
NG >> Replace key switch and key lock solenoid.

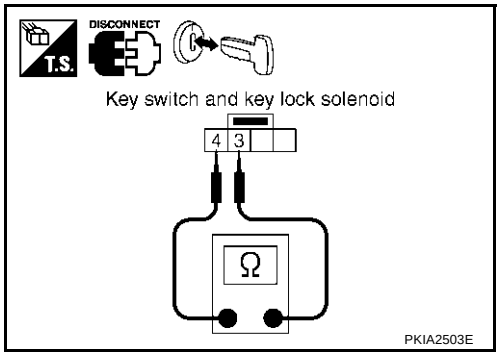

5. CHECK KEY SWITCH CIRCUIT

1. Disconnect BCM connector.
2. Check continuity between BCM harness connector M37 terminal 62 (B/R) and key switch and key lock solenoid harness connector M28 terminal 4 (B/R).

   Continuity should exist.

3. Check continuity between BCM harness connector M37 terminal 62 (B/R) and ground.

   Continuity should not exist.

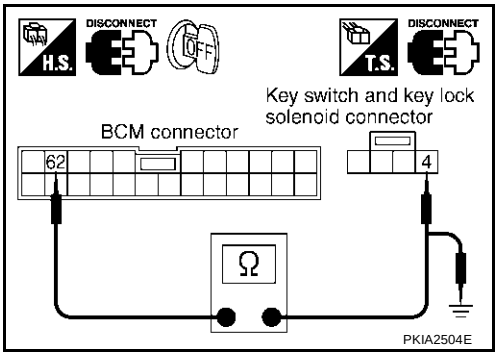

OK or NG

OK >> GO TO 6.
NG >> Repair harness or connector.

6. CHECK KEY SWITCH POWER SUPPLY CIRCUIT

Check voltage between key switch and key lock solenoid harness connector M28 terminal 3 (Y/R) and ground.

Battery voltage should exist.

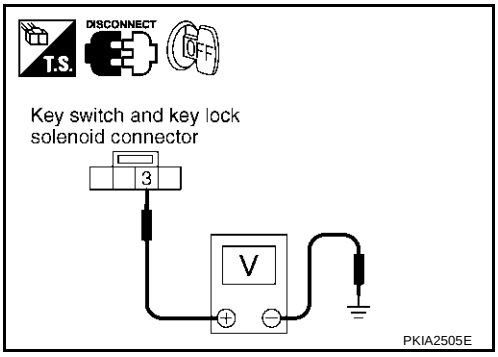

OK or NG

OK >> Replace BCM. Refer to BCS-36, "Removal and Installation of BCM" .
NG >> Check harness for open or short between key switch and key lock solenoid and fuse.

Light Warning Chime Does Not Operate

AKS007OI

1. CHECK WARNING CHIME OPERATION

Check the chime under conditions in exception of light warning chime operation.

Dose warning chime sound?

YES >> GO TO 2.
NO >> GO TO DI-107, "All Warnings Are Not Operated" .

2. CHECK BCM INPUT SIGNAL

1. Select “BCM” on CONSULT-II.
2. With “DATA MONITOR” of “LIGHT WARN ALM”, confirm “TAIL LAMP SW” when the lighting switch is operated.

   When lighting switch is in 1st position : TAIL LAMP SW ON

   When lighting switch is OFF : TAIL LAMP SW OFF

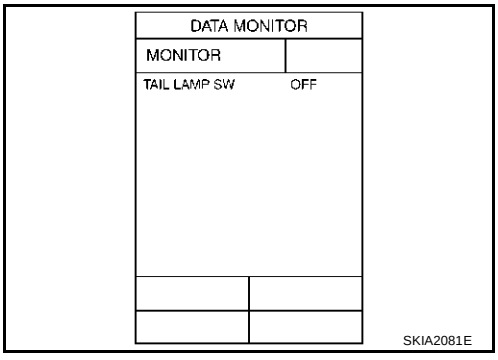

OK or NG

OK >> Replace BCM. Refer to BCS-36, "Removal and Installation of BCM" .
NG >> Replace lighting switch.

Seat Belt Warning Chime Does Not Operate

AKS004HD

1. CHECK WARNING CHIME OPERATION

Check the chime under conditions in exceptions of seat belt warning chime operation.

Does warning chime sound?

YES >> GO TO 2.
NO >> Go to DI-107, "All Warnings Are Not Operated" .

2. CHECK BCM INPUT SIGNAL

1. Select “BCM” on CONSULT-II.
2. With “DATA MONITOR” of “SEAT BELT ALM”, confirm “SEAT BELT SW” when the seat belt buckle switch is operated.

When seat belt is fastened : SEAT BELT SW OFF
When seat belt is unfastened : SEAT BELT SW ON

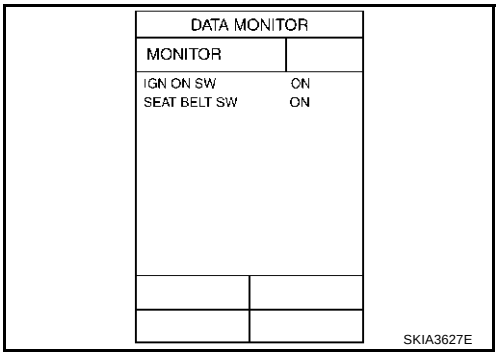

OK or NG

OK >> Replace BCM. Refer toBCS-36, "Removal and Installation of BCM" .
NG >> GO TO 3.

3. CHECK COMBINATION METER INPUT SIGNAL

1. Turn ignition switch ON.
2. Check voltage between combination meter harness connector M25 terminal 3 (LG) and ground.

Terminals			Condition	Voltage (V)
(+)		(–)		
Connector	Terminal			
M25	3 (LG)	Ground	Seat belt is fastened	Approx. 12
			Seat belt is unfastened	Approx. 0

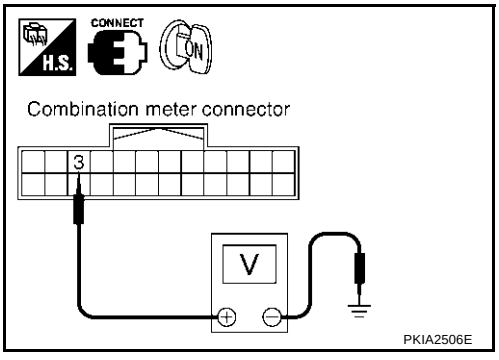

OK or NG

OK >> Replace combination meter.
NG >> GO TO 4.

4. CHECK SEAT BELT BUCKLE SWITCH

1. Turn ignition switch OFF.
2. Disconnect seat belt buckle switch (driver side) connector.
3. Check continuity between seat belt buckle switch (driver side) harness connector B308 terminals 50 and 65.

Terminal		Condition	Continuity
50	65	Seat belt is fastened	No
		Seat belt is unfastened	Yes

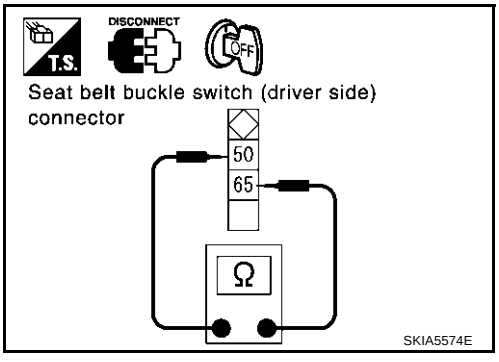

OK or NG

OK >> GO TO 5.
NG >> Replace seat belt buckle switch (driver side).

5. CHECK SEAT BELT BUCKLE SWITCH CIRCUIT

1. Disconnect combination meter connector.
2. Check continuity between combination meter harness connector M25 terminal 3 (LG) and seat belt buckle switch (driver side) harness connector B308 terminal 50 (Y).

   Continuity should exist.

3. Check harness continuity between combination meter harness connector M25 terminal 3 (LG) and ground.

   Continuity should not exist.

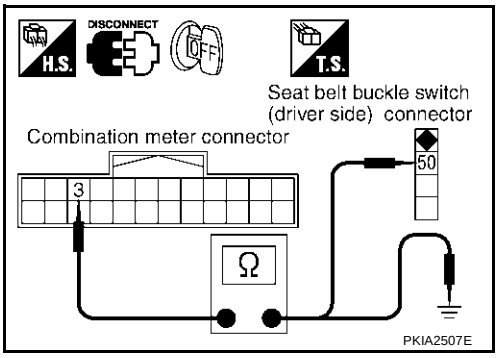

OK or NG

OK >> Check seat belt buckle switch ground circuit.
NG >> Repair harness or connector.