SECTION FAX
FRONT AXLE

CONTENTS

SYMPTOM DIAGNOSIS

NOISE, VIBRATION AND HARSHNESS (NVH) TROUBLESHOOTING

NVH Troubleshooting Chart

INFOID:0000000003372869

Use chart below to find the cause of the symptom. If necessary, repair or replace these parts.

Possible cause and SUSPECTED PARTS			Excessive joint angle	Joint sliding resistance	Imbalance	Improper installation, looseness	Parts interference	Wheel bearing damage	FRONT AXLE AND FRONT SUSPENSION	FRONT AXLE	TIRE	ROAD WHEEL	DRIVE SHAFT	BRAKE	STEERING
Reference page			—	FAX-27	—	FAX-10	—	FAX-8	NVH in FAX and FSU sections	Refer to Front axle in this chart	NVH in WT section	NVH in WT section	Refer to DRIVE SHAFT in this chart	NVH in BR section	NVH in ST section
Symptom	DRIVE SHAFT	Noise	×	×				×	×	×	×	×		×	×
		Shake	×		×			×	×	×	×	×		×	×
	FRONT AXLE	Noise				×	×	×	×		×	×	×	×	×
		Shake				×	×	×	×		×	×	×	×	×
		Vibration				×	×	×	×		×		×		×
		Shimmy				×	×		×		×	×		×	×
		Judder				×			×		×	×		×	×
		Poor quality ride or handling				×	×		×		×	×			

×: Applicable

PRECAUTION

PRECAUTIONS
FOR USA AND CANADA

FOR USA AND CANADA : Precaution for Supplemental Restraint System (SRS) "AIR BAG" and "SEAT BELT PRE-TENSIONER"

INFOID:0000000004754892

The Supplemental Restraint System such as “AIR BAG” and “SEAT BELT PRE-TENSIONER”, used along with a front seat belt, helps to reduce the risk or severity of injury to the driver and front passenger for certain types of collision. This system includes seat belt switch inputs and dual stage front air bag modules. The SRS system uses the seat belt switches to determine the front air bag deployment, and may only deploy one front air bag, depending on the severity of a collision and whether the front occupants are belted or unbelted.
Information necessary to service the system safely is included in the “SRS AIRBAG” and “SEAT BELT” of this Service Manual.

WARNING:
- **To avoid rendering the SRS inoperative, which could increase the risk of personal injury or death in the event of a collision which would result in air bag inflation, all maintenance must be performed by an authorized NISSAN/INFINITI dealer.**
- **Improper maintenance, including incorrect removal and installation of the SRS, can lead to personal injury caused by unintentional activation of the system. For removal of Spiral Cable and Air Bag Module, see the “SRS AIRBAG”.**
- **Never use electrical test equipment on any circuit related to the SRS unless instructed to in this Service Manual. SRS wiring harnesses can be identified by yellow and/or orange harnesses or harness connectors.**

PRECAUTIONS WHEN USING POWER TOOLS (AIR OR ELECTRIC) AND HAMMERS

When working near the Airbag Diagnosis Sensor Unit or other Airbag System sensors while ignition switch is ON or engine is running, never use air or electric power tools or strike near the sensor(s) with a hammer. Heavy vibration may activate the sensor(s), deploy the airbag(s), possibly cause serious injury.
When using air or electric power tools or hammers, always turn OFF ignition switch, disconnect the battery, and wait 3 minutes or more before performing any service.

FOR USA AND CANADA : Precaution Necessary for Steering Wheel Rotation after Battery Disconnect

INFOID:0000000004755082

NOTE:
- Before removing and installing any control units, first turn the push-button ignition switch to the LOCK position, then disconnect both battery cables.
- After finishing work, confirm that all control unit connectors are connected properly, then re-connect both battery cables.
- Always use CONSULT-III to perform self-diagnosis as a part of each function inspection after finishing work. If a DTC is detected, perform trouble diagnosis according to self-diagnosis results.

This vehicle is equipped with a push-button ignition switch and a steering lock unit.
If the battery is disconnected or discharged, the steering wheel will lock and cannot be turned.
If turning the steering wheel is required with the battery disconnected or discharged, follow the procedure below before starting the repair operation.

OPERATION PROCEDURE

1. Connect both battery cables.
   NOTE:
   Supply power using jumper cables if battery is discharged.
2. Turn the push-button ignition switch to ACC position.
   (At this time, the steering lock will be released.)
3. Disconnect both battery cables. The steering lock will remain released with both battery cables disconnected and the steering wheel can be turned.
4. Perform the necessary repair operation.

5. When the repair work is completed, re-connect both battery cables. With the brake pedal released, turn the push-button ignition switch from ACC position to ON position, then to LOCK position. (The steering wheel will lock when the push-button ignition switch is turned to LOCK position.)
6. Perform self-diagnosis check of all control units using CONSULT-III.

FOR USA AND CANADA : Precautions for Drive Shaft

INFOID:0000000004303598

- Observe the following precautions when disassembling and assembling drive shaft.
- Never disassemble joint sub-assembly because it is non-overhaul parts.
- Perform work in a location which is as dust-free as possible.
- Clean the parts, before disassembling and assembling.
- Prevent the entry of foreign objects during disassembly of the service location.
- Reassemble disassembled parts carefully in the correct order. If work is interrupted, a clean cover must be placed over parts.
- Use paper waste. Fabric shop cloths must not be used because of the danger of lint adhering to parts.
- Clean disassembled parts (except for rubber parts) with kerosene which shall be removed by blowing with air or wiping with paper waste.

FOR MEXICO

FOR MEXICO : Precaution for Supplemental Restraint System (SRS) "AIR BAG" and "SEAT BELT PRE-TENSIONER"

INFOID:0000000004755087

The Supplemental Restraint System such as “AIR BAG” and “SEAT BELT PRE-TENSIONER”, used along with a front seat belt, helps to reduce the risk or severity of injury to the driver and front passenger for certain types of collision. This system includes seat belt switch inputs and dual stage front air bag modules. The SRS system uses the seat belt switches to determine the front air bag deployment, and may only deploy one front air bag, depending on the severity of a collision and whether the front occupants are belted or unbelted.
Information necessary to service the system safely is included in the “SRS AIRBAG” and “SEAT BELT” of this Service Manual.

WARNING:

- **To avoid rendering the SRS inoperative, which could increase the risk of personal injury or death in the event of a collision which would result in air bag inflation, all maintenance must be performed by an authorized NISSAN/INFINITI dealer.**
- **Improper maintenance, including incorrect removal and installation of the SRS, can lead to personal injury caused by unintentional activation of the system. For removal of Spiral Cable and Air Bag Module, see the “SRS AIRBAG”.**
- **Never use electrical test equipment on any circuit related to the SRS unless instructed to in this Service Manual. SRS wiring harnesses can be identified by yellow and/or orange harnesses or harness connectors.**

PRECAUTIONS WHEN USING POWER TOOLS (AIR OR ELECTRIC) AND HAMMERS

When working near the Airbag Diagnosis Sensor Unit or other Airbag System sensors while ignition switch is ON or engine is running, never use air or electric power tools or strike near the sensor(s) with a hammer. Heavy vibration may activate the sensor(s), deploy the airbag(s), possibly cause serious injury.
When using air or electric power tools or hammers, always turn OFF ignition switch, disconnect the battery, and wait 3 minutes or more before performing any service.

FOR MEXICO : Precaution Necessary for Steering Wheel Rotation after Battery Disconnect

INFOID:0000000004755083

NOTE:

- Before removing and installing any control units, first turn the push-button ignition switch to the LOCK position, then disconnect both battery cables.
- After finishing work, confirm that all control unit connectors are connected properly, then re-connect both battery cables.
- Always use CONSULT-III to perform self-diagnosis as a part of each function inspection after finishing work. If a DTC is detected, perform trouble diagnosis according to self-diagnosis results.

This vehicle is equipped with a push-button ignition switch and a steering lock unit.
If the battery is disconnected or discharged, the steering wheel will lock and cannot be turned.
If turning the steering wheel is required with the battery disconnected or discharged, follow the procedure below before starting the repair operation.

OPERATION PROCEDURE

1. Connect both battery cables.
   NOTE:
   Supply power using jumper cables if battery is discharged.
2. Turn the push-button ignition switch to ACC position.
   (At this time, the steering lock will be released.)
3. Disconnect both battery cables. The steering lock will remain released with both battery cables disconnected and the steering wheel can be turned.
4. Perform the necessary repair operation.
5. When the repair work is completed, re-connect both battery cables. With the brake pedal released, turn the push-button ignition switch from ACC position to ON position, then to LOCK position. (The steering wheel will lock when the push-button ignition switch is turned to LOCK position.)
6. Perform self-diagnosis check of all control units using CONSULT-III.

FOR MEXICO : Precautions for Drive Shaft

INFOID:0000000004754890

- Observe the following precautions when disassembling and assembling drive shaft.
- Never disassemble joint sub-assembly because it is non-overhaul parts.
- Perform work in a location which is as dust-free as possible.
- Clean the parts, before disassembling and assembling.
- Prevent the entry of foreign objects during disassembly of the service location.
- Reassemble disassembled parts carefully in the correct order. If work is interrupted, a clean cover must be placed over parts.
- Use paper waste. Fabric shop cloths must not be used because of the danger of lint adhering to parts.
- Clean disassembled parts (except for rubber parts) with kerosene which shall be removed by blowing with air or wiping with paper waste.

PREPARATION

PREPARATION

Special Service Tool

INFOID:0000000004578895

The actual shapes of Kent-More tools may differ from those of special service tools illustrated here.

Tool number (Kent-More No.) Tool name		Description
KV40107300 (—) Boot band crimping tool	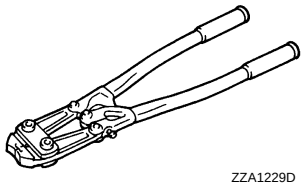 ZZA1229D	Installing boot band
KV40107500 (—) Drive shaft attachment	 ZZA1230D	Removing drive shaft
KV38107900 (—) Protector a: ϕ32 mm (1.26 in) dia.	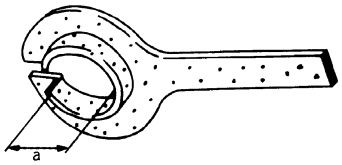 PDIA1183J	Installing drive shaft
ST35271000 (—) Drift a: ϕ72 mm (2.83 in) dia. b: ϕ63 mm (2.48 in) dia.	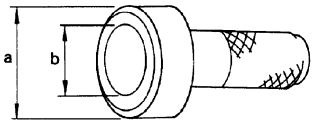 ZZA0701D	Install support bearing

Commercial Service Tool

INFOID:0000000003372877

Tool name		Description
Power tool	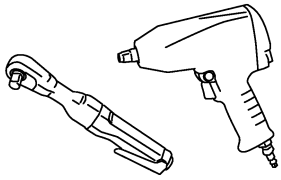 PBIC0190E	Loosening bolts and nuts

ON-VEHICLE MAINTENANCE

FRONT WHEEL HUB AND KNUCKLE

Inspection

INFOID:0000000003372878

MOUNTING INSPECTION

Make sure that the mounting conditions (looseness, backlash) of each component and component conditions (wear, damage) are normal.

WHEEL BEARING INSPECTION

- Move wheel hub and bearing assembly in the axial direction by hand. Make sure there is no looseness of wheel bearing.

Standard

Axial end play : Refer to FAX-28, "Wheel Bearing".

- Rotate wheel hub and bearing assembly and make sure there is no unusual noise or other irregular conditions. If there is any of irregular conditions, replace wheel hub and bearing assembly.

FRONT DRIVE SHAFT

Inspection

INFOID:0000000003372879

- Check drive shaft mounting point and joint for looseness and other damage.
- Check boot for cracks and other damage.
  CAUTION:
  Replace entire drive shaft assembly when noise or vibration occurs from drive shaft.

ON-VEHICLE REPAIR

FRONT WHEEL HUB AND KNUCKLE

Exploded View

INFOID:0000000003372880

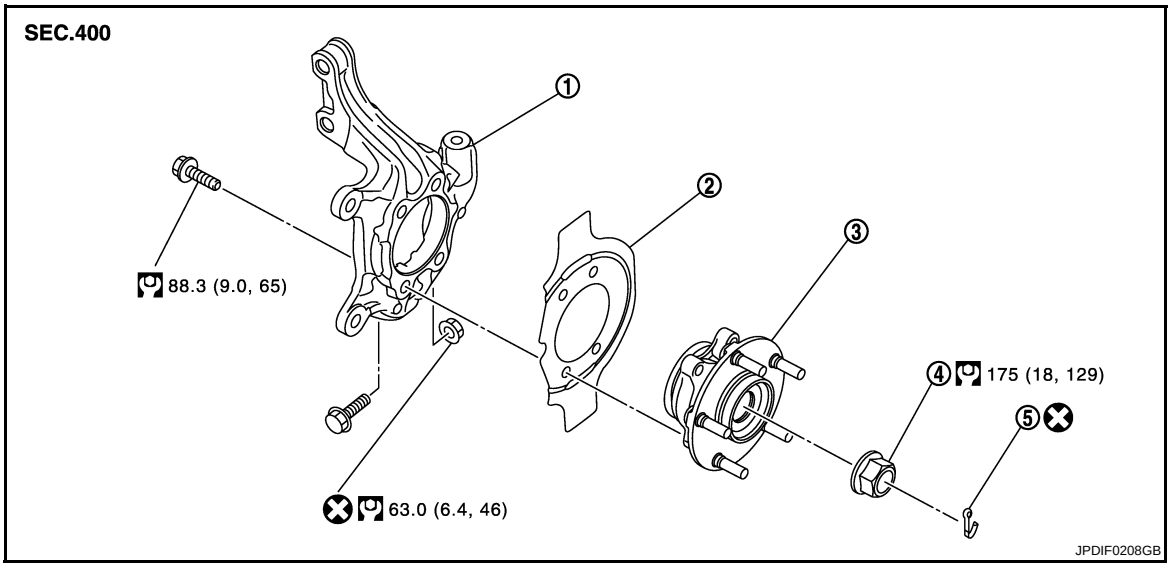

1. Steering knuckle
2. Splash guard
3. Wheel hub and bearing assembly
4. Wheel hub lock nut
5. Cotter pin

Refer to GI-4, "Components" for symbols in the figure.

Removal and Installation

INFOID:0000000003372881

REMOVAL

1. Remove tires with power tool.
2. Remove wheel sensor and sensor harness. Refer to BRC-114, "FRONT WHEEL SENSOR : Exploded View".
3. Remove lock plate from strut assembly. Refer to BR-22, "FRONT : Exploded View".
4. Remove caliper assembly. Hang caliper assembly not to interfere with work. Refer to BR-36, "BRAKE CALIPER ASSEMBLY : Exploded View".
   CAUTION:
   Never depress brake pedal while brake caliper is removed.
5. Remove disc rotor. Refer to BR-37, "BRAKE CALIPER ASSEMBLY : Removal and Installation".
6. Remove cotter pin, and then loosen wheel hub lock nut with power tool.
7. Patch wheel hub lock nut with a piece of wood. Hammer the wood to disengage wheel hub and bearing assembly from drive shaft.
   CAUTION:
   - **Never place drive shaft joint at an extreme angle. Also be careful not to overextend slide joint.**
   - **Never allow drive shaft to hang down without support for joint sub-assembly, shaft and the other parts.**

   NOTE:
   Use suitable puller, if wheel hub and bearing assembly and drive shaft cannot be separated even after performing the above procedure.
8. Remove wheel hub lock nut.
9. Remove strut assembly from steering knuckle. Refer to FSU-10, "Exploded View".
10. Remove drive shaft from wheel hub and bearing assembly, suspend the drive shaft with suitable wire. Refer to FAX-17, "Exploded View".
11. Temporarily tighten strut assembly and steering knuckle.

12. Remove wheel hub and bearing assembly, and then remove splash guard.
13. Remove steering outer socket from steering knuckle. Refer to ST-24, "Exploded View".
14. Remove steering knuckle from transverse link.
15. Remove steering knuckle from strut assembly.

INSTALLATION

Note the following, and install in the reverse order of the removal.

- Clean the matching surface of wheel hub lock nut and wheel hub and bearing assembly.
  CAUTION:
  Never apply lubricating oil to these matching surface.
- Clean the matching surface of drive shaft and wheel hub and bearing assembly.
  CAUTION:
  Apply paste [service parts (440037S000)] to cover entire flat surface (A) of joint sub-assembly of drive shaft.

  Standard

  Amount paste 0.2 – 1.0 g (0.008 – 0.035 oz)

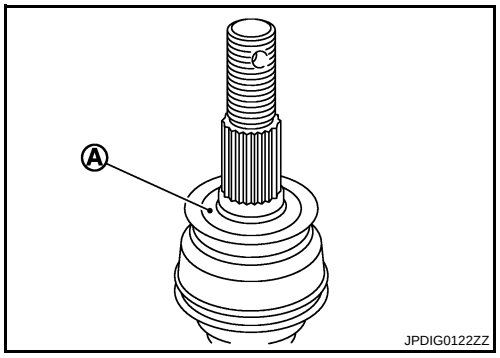

- Never use a power tool to tighten the wheel hub lock nut.
- Perform the final tightening of each of parts under unladen conditions, which were removed when removing wheel hub and bearing assembly and axle housing.
- Never reuse cotter pin.

Inspection

INFOID:0000000003372882

INSPECTION AFTER REMOVAL

Check components for deformation, cracks, and other damage. Replace if necessary.

Ball Joint Inspection

Check boots of transverse link and steering outer socket ball joint for breakage, axial play, and torque. Refer to FSU-13, "Inspection" and ST-34, "Inspection".

INSPECTION AFTER INSTALLATION

1. Check wheel sensor harness for proper connection. Refer to BRC-114, "FRONT WHEEL SENSOR : Exploded View".
2. Check the wheel alignment. Refer to FSU-9, "Inspection".
3. Adjust neutral position of steering angle sensor. Refer to BRC-9, "ADJUSTMENT OF STEERING ANGLE SENSOR NEUTRAL POSITION : Special Repair Requirement".

FRONT DRIVE SHAFT BOOT

Exploded View

INFOID:0000000003372883

LEFT SIDE

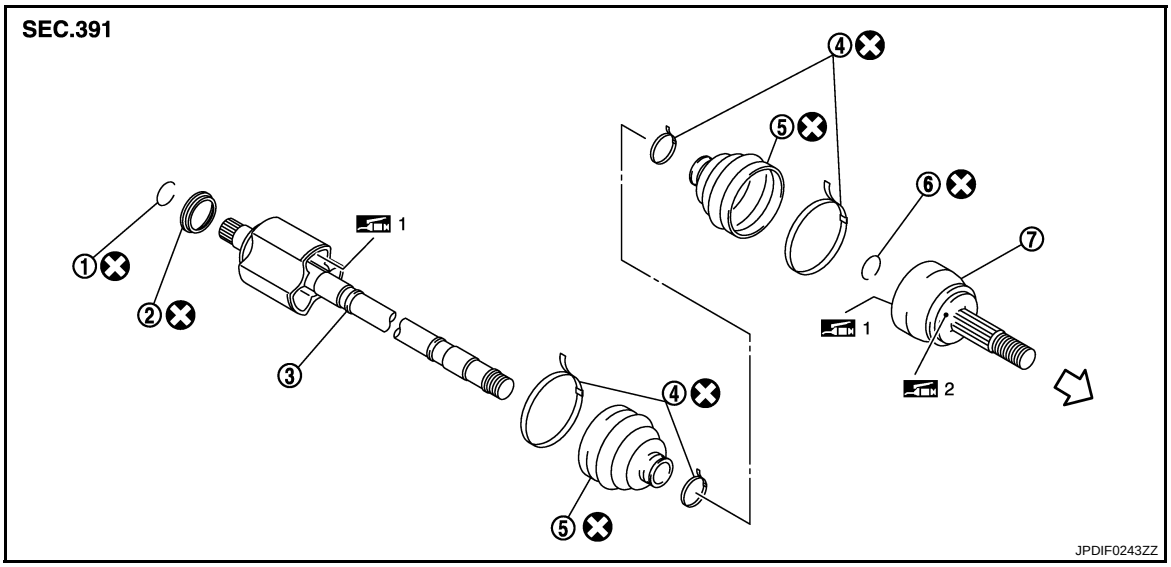

1. Circular clip
2. Dust shield
3. Housing assembly
4. Boot band
5. Boot
6. Circular clip
7. Joint sub-assembly

⇦ : Wheel side

1: Fill NISSAN Genuine grease or equivalent.

2: Apply paste [service parts (440037S000)].

Refer to GI-4, "Components" for symbols not described on the above.

RIGHT SIDE

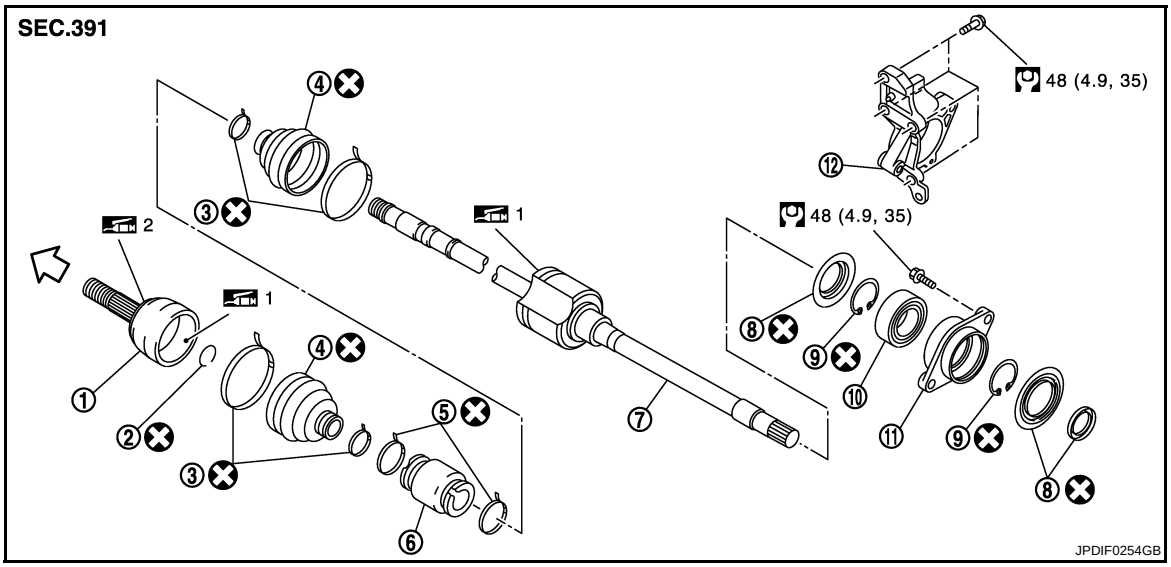

1. Joint sub-assembly
2. Circular clip
3. Boot band
4. Boot
5. Damper band
6. Dynamic damper
7. Housing assembly
8. Dust shield
9. Snap ring
10. Support bearing
11. Baring housing
12. Support bearing bracket

⇦ : Wheel side

1: Fill NISSAN Genuine grease or equivalent.

2: Apply paste [service parts (440037S000)].

Refer to GI-4, "Components" for symbols not described on the above.

WHEEL SIDE

WHEEL SIDE : Removal and Installation

INFOID:0000000003452015

REMOVAL

1. Remove tires with power tool.
2. Remove wheel sensor and sensor harness. Refer to BRC-114, "FRONT WHEEL SENSOR : Exploded View".
3. Remove lock plate from strut assembly. Refer to BR-22, "FRONT : Exploded View".
4. Remove caliper assembly. Hang caliper assembly not to interfere with work. Refer to BR-36, "BRAKE CALIPER ASSEMBLY : Exploded View".
   CAUTION:
   Never depress brake pedal while brake caliper is removed.
5. Remove disc rotor. Refer to BR-37, "BRAKE CALIPER ASSEMBLY : Removal and Installation".
6. Remove cotter pin, and then loosen wheel hub lock nut with power tool.
7. Patch wheel hub lock nut with a piece of wood. Hammer the wood to disengage wheel hub and bearing assembly from drive shaft.
   CAUTION:
   - **Never place drive shaft joint at an extreme angle. Also be careful not to overextend slide joint.**
   - **Never allow drive shaft to hang down without support for joint sub-assembly, housing assembly and the other parts.**

   NOTE:
   Use suitable puller, if wheel hub and bearing assembly and drive shaft cannot be separated even after performing the above procedure.
8. Remove wheel hub lock nut.
9. Remove strut assembly from steering knuckle. Refer to FSU-10, "Exploded View".
10. Remove drive shaft from wheel hub and bearing assembly.
11. Remove boot bands, and then remove boot from joint sub-assembly.
12. Screw drive shaft puller (A) into joint sub-assembly screw part to a length of 30 mm (1.18 in) or more. Support drive shaft with one hand and pull out joint sub-assembly with a sliding hammer (B) from housing assembly.
    CAUTION:
    - **Align a sliding hammer and drive shaft and remove them by pulling firmly and uniformly.**
    - **If joint sub-assembly cannot be pulled out, try after removing drive shaft from vehicle.**

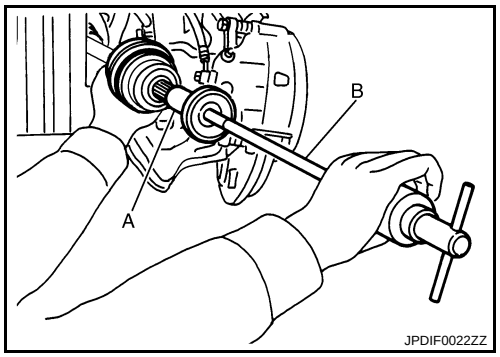

13. Remove circular clip (1) from housing assembly.
14. Remove boot from housing assembly.

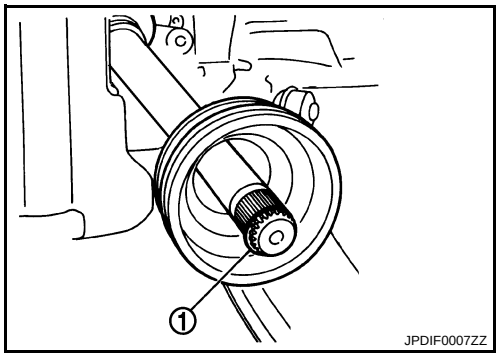

INSTALLATION

1. Clean the old grease on joint sub-assembly with paper waste.
2. Fill serration slot joint sub-assembly with NISSAN genuine grease or equivalent until the serration slot and ball groove become full to the brim.
   CAUTION:
   After applying grease, use a paper waste to wipe off old grease that has oozed out.
3. Install boot and boot bands to housing assembly.
   CAUTION:
   - **Wrap serration on housing assembly with tape to protect the boot from damage.**
   - **Never reuse boot and boot band.**
4. Remove the tape wrapped around the serration on housing assembly.
5. Position the circular clip on groove at the housing assembly edge.
   CAUTION:
   Never reuse circular clip.
   NOTE:
   Drive joint inserter is recommended when installing circular clip.
6. Align both center axles of the housing assembly edge and joint sub-assembly. Then assemble housing assembly with joint sub-assembly holding circular clip.
7. Install joint sub-assembly (1) to housing assembly using plastic hammer.
   CAUTION:
   Confirm that joint sub-assembly is correctly engaged while rotating drive housing assembly.
8. Apply the specified amount of grease into the boot inside from large diameter side of boot.

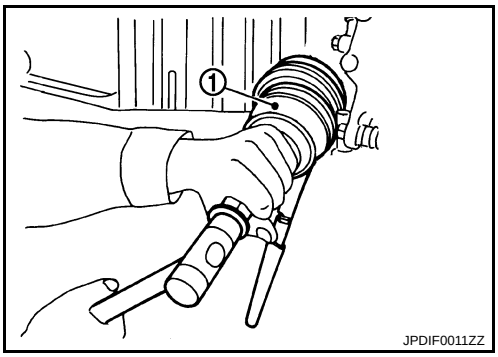

Standard

Grease amount : Refer to FAX-28, "Drive Shaft".

9. Install the boot securely into grooves (indicated by “*” marks) shown in the figure.
   CAUTION:
   If grease adheres to the boot mounting surface (indicated by “*” mark) on the housing assembly or joint sub-assembly, boot may be removed. Remove all grease from the boot mounting surface.
10. To prevent the deformation of the boot, adjust the boot installation length (L) to the specified value shown below by inserting the suitable tool into inside of the boot from the large diameter side of the boot and discharging the inside air.

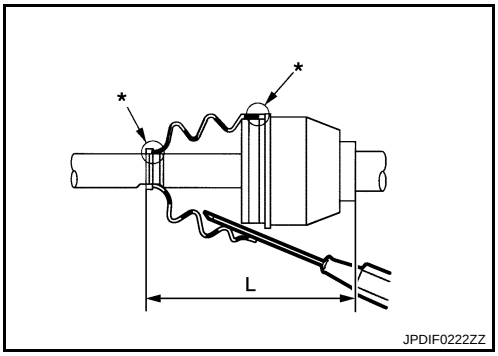

Standard

L : Refer to FAX-28, "Drive Shaft".

CAUTION:
- **If the boot installation length exceeds the standard, it may cause breakage of boot.**
- **Be careful not to touch the inside of the boot with a tip of tool.**

11. Secure the large and small ends of the boot with boot bands using the boot band crimping tool (A) [SST: KV40107300 (—)].
CAUTION:
Never reuse boot band.

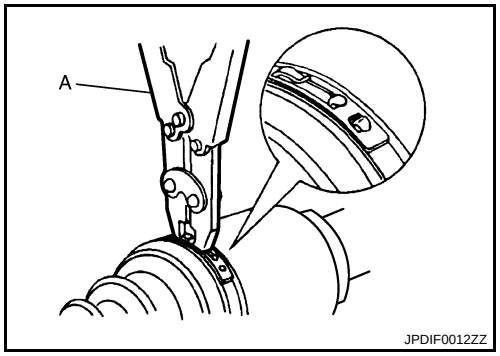

NOTE:
Secure boot band so that dimension (M) meets the specification as shown in the figure.

Standard

M : 1.0 – 4.0 mm (0.039 – 0.157 in)

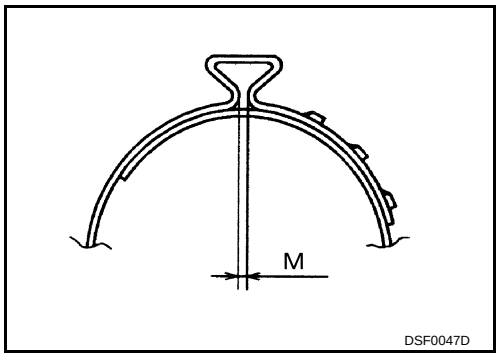

12. Secure joint sub-assembly and housing assembly, and then make sure that they are in the correct position when rotating boot. Reinstall them using boot bands when boot installation positions become incorrect.
CAUTION:
Never reuse boot band.
13. Clean the matching surface of wheel hub lock nut and wheel hub and bearing assembly.
CAUTION:
Never apply lubricating oil to these matching surface.
14. Clean the matching surface of drive shaft and wheel hub and bearing assembly.
CAUTION:
Apply paste [service parts (440037S000)] to cover entire flat surface (A) of joint sub-assembly of drive shaft.

Standard

Amount paste 0.2 – 1.0 g (0.008 – 0.035 oz)

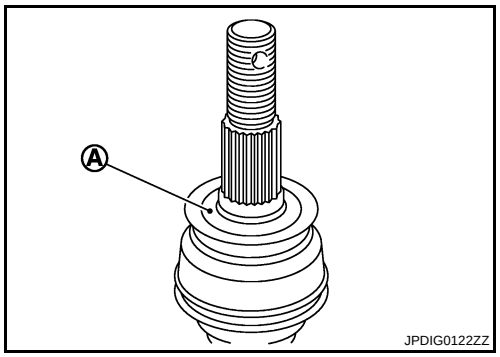

15. Insert drive shaft to wheel hub and bearing assembly, and then temporarily tighten wheel hub lock nut.
16. Install strut assembly to steering knuckle. Refer to FSU-10, "Exploded View".
17. Install disc rotor. Refer to BR-37, "BRAKE CALIPER ASSEMBLY : Removal and Installation".
18. Install caliper assembly to steering knuckle. Refer to BR-36, "BRAKE CALIPER ASSEMBLY : Exploded View".
19. Install lock plate to strut assembly. Refer to BR-22, "FRONT : Exploded View".
20. Install wheel sensor and sensor harness to steering knuckle. Refer to BRC-114, "FRONT WHEEL SENSOR : Exploded View".
21. Tighten the wheel hub lock nut to the specified torque. Refer to FAX-10, "Exploded View".
NOTE:
- Never use a power tool to tighten the wheel hub lock nut.
- Perform the final tightening of each of parts under unladen conditions, which were removed when removing wheel hub and bearing assembly and axle housing.
22. Install cotter pin. Refer to FAX-10, "Exploded View".
CAUTION:
- **Never reuse cotter pin.**

- **Bend cotter pin at the root sufficiently to prevent any looseness.**

TRANSAXLE SIDE

TRANSAXLE SIDE : Removal and Installation

INFOID:0000000003452016

NOTE:
Remove boot after removing drive shaft. Refer to FAX-18, "LEFT SIDE : Removal and Installation" (left side), FAX-19, "RIGHT SIDE : Removal and Installation" (right side).

Inspection

INFOID:0000000003452086

INSPECTION AFTER REMOVAL

- Move joint up/down, left/right, and in the axial directions. Check for motion that is not smooth and for significant looseness.
- Check boot for cracks, damage, and leakage of grease.
- Disassemble drive shaft and exchange malfunctioning part if there is a non-standard condition.

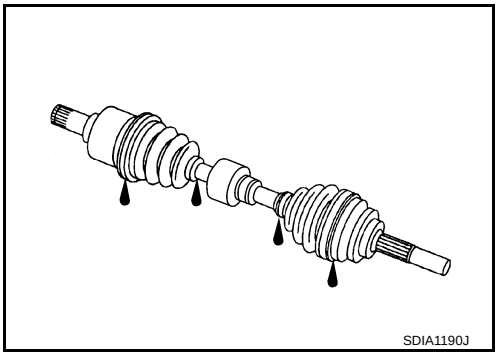

FRONT DRIVE SHAFT

Exploded View

INFOID:0000000004578872

LEFT SIDE

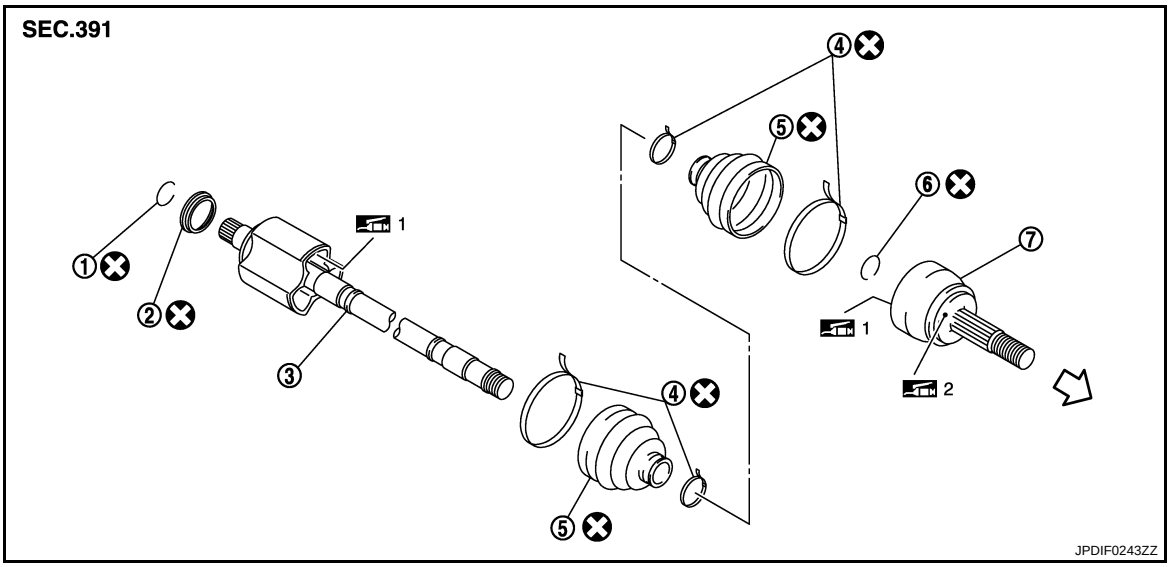

1. Circular clip
2. Dust shield
3. Housing assembly
4. Boot band
5. Boot
6. Circular clip
7. Joint sub-assembly

⇦ : Wheel side

1: Fill NISSAN Genuine grease or equivalent.

2: Apply paste [service parts (440037S000)].

Refer to GI-4, "Components" for symbols not described on the above.

RIGHT SIDE

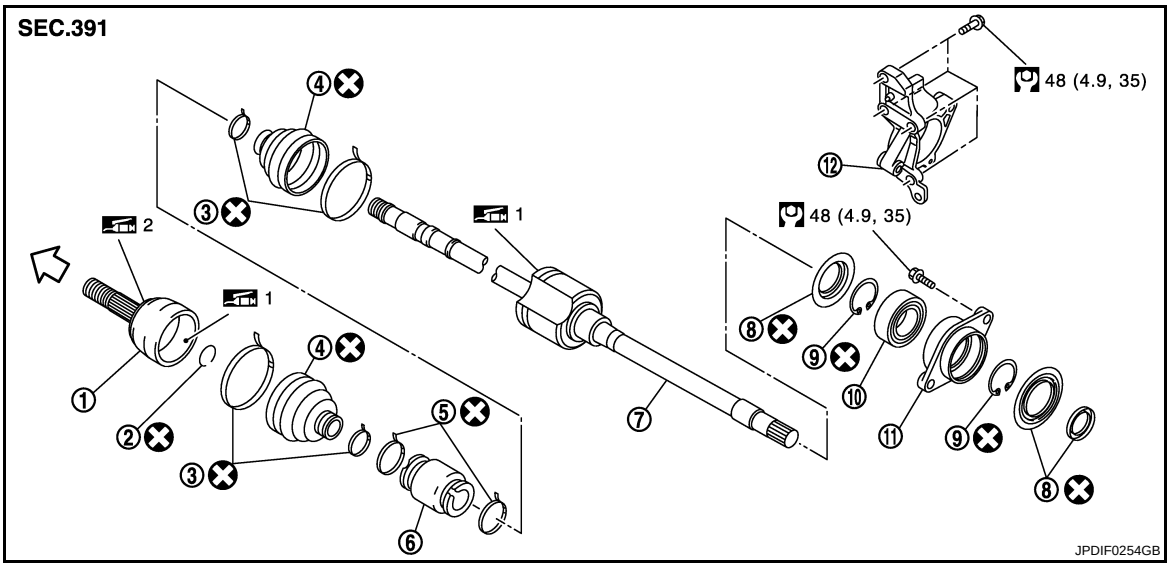

1. Joint sub-assembly
2. Circular clip
3. Boot band
4. Boot
5. Damper band
6. Dynamic damper
7. Housing assembly
8. Dust shield
9. Snap ring
10. Support bearing
11. Baring housing
12. Support bearing bracket

⇦ : Wheel side

1: Fill NISSAN Genuine grease or equivalent.

2: Apply paste [service parts (440037S000)].

Refer to GI-4, "Components" for symbols not described on the above.

LEFT SIDE

LEFT SIDE : Removal and Installation

INFOID:0000000003579539

REMOVAL

1. Remove tires with power tool.
2. Remove wheel sensor and sensor harness. Refer to BRC-114, "FRONT WHEEL SENSOR : Exploded View".
3. Remove lock plate from strut assembly. Refer to BR-22, "FRONT : Exploded View".
4. Remove caliper assembly. Hang caliper assembly not to interfere with work. Refer to BR-36, "BRAKE CALIPER ASSEMBLY : Exploded View".
   CAUTION:
   Never depress brake pedal while brake caliper is removed.
5. Remove disc rotor. Refer to BR-37, "BRAKE CALIPER ASSEMBLY : Removal and Installation".
6. Remove cotter pin, and then loosen wheel hub lock nut with power tool.
7. Patch wheel hub lock nut with a piece of wood. Hammer the wood to disengage wheel hub and bearing assembly from drive shaft.
   CAUTION:
   - **Never place drive shaft joint at an extreme angle. Also be careful not to overextend slide joint.**
   - **Never allow drive shaft to hang down without support for joint sub-assembly, housing assembly and the other parts.**

   NOTE:
   Use suitable puller, if wheel hub and bearing assembly and drive shaft cannot be separated even after performing the above procedure.
8. Remove wheel hub lock nut.
9. Remove strut assembly from steering knuckle. Refer to FSU-10, "Exploded View".
10. Remove drive shaft from transaxle assembly.
    - Use the drive shaft attachment (A) [SST: KV40107500 (—)] and a sliding hammer (B) while inserting tip of the drive shaft attachment between housing assembly and transaxle assembly.
      CAUTION:
      Never place drive shaft joint at an extreme angle when removing drive shaft. Also be careful not to overextend slide joint.

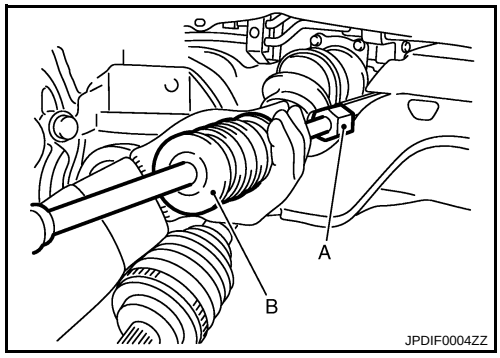

INSTALLATION

Note the following, and install in the reverse order of removal.

- Always replace differential side oil seal with new one when installing drive shaft. Refer to TM-172, "2WD : Exploded View".

- Place the protector (A) [SST: KV38107900 (—)] onto transaxle assembly to prevent damage to the oil seal while inserting drive shaft. Slide drive shaft sliding joint and tap with a hammer to install securely.
  CAUTION:
  Make sure that circular clip is completely engaged.

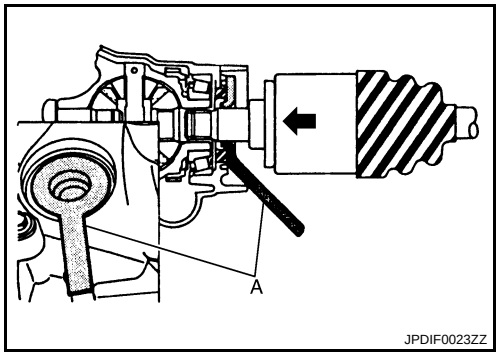

- Clean the matching surface of wheel hub lock nut and wheel hub and bearing assembly.
  CAUTION:
  Never apply lubricating oil to these matching surface.
- Clean the matching surface of drive shaft and wheel hub and bearing assembly.
  CAUTION:
  Apply paste [service parts (440037S000)] to cover entire flat surface (A) of joint sub-assembly of drive shaft.

  Standard

  Amount paste 0.2 – 1.0 g (0.008 – 0.035 oz)

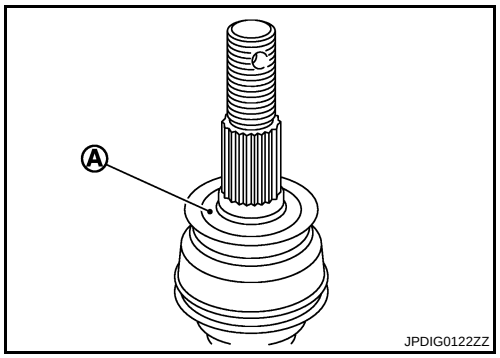

- Never use a power tool to tighten the wheel hub lock nut.
- Perform the final tightening of each of parts under unladen conditions, which were removed when removing wheel hub and bearing assembly and axle housing.
- Never reuse cotter pin.

RIGHT SIDE

RIGHT SIDE : Removal and Installation

INFOID:0000000003579540

REMOVAL

1. Remove tires with power tool.
2. Remove wheel sensor and sensor harness. Refer to BRC-114, "FRONT WHEEL SENSOR : Exploded View".
3. Remove lock plate from strut assembly. Refer to BR-22, "FRONT : Exploded View".
4. Remove caliper assembly. Hang caliper assembly not to interfere with work. Refer to BR-36, "BRAKE CALIPER ASSEMBLY : Exploded View".
   CAUTION:
   Never depress brake pedal while brake caliper is removed.
5. Remove disc rotor. Refer to BR-37, "BRAKE CALIPER ASSEMBLY : Removal and Installation".
6. Remove cotter pin, and then loosen wheel hub lock nut with power tool.
7. Patch wheel hub lock nut with a piece of wood. Hammer the wood to disengage wheel hub and bearing assembly from drive shaft.
   CAUTION:
   - **Never place drive shaft joint at an extreme angle. Also be careful not to overextend slide joint.**
   - **Never allow drive shaft to hang down without support for joint sub-assembly, housing assembly and the other parts.**

   NOTE:
   Use suitable puller, if wheel hub and bearing assembly and drive shaft cannot be separated even after performing the above procedure.
8. Remove wheel hub lock nut.
9. Remove strut assembly from steering knuckle. Refer to FSU-10, "Exploded View".
10. Remove drive shaft from wheel hub and bearing assembly.
11. Remove bearing housing mounting bolts.

12. Remove drive shaft from transaxle assembly.
    CAUTION:
    Never place drive shaft joint at an extreme angle when removing drive shaft. Also be careful not to overextend slide joint.
13. Remove support bearing bracket, follow the procedure described below.

a. Remove front exhaust tube. Refer to EX-5, "Exploded View".

b. Remove three way catalyst (bank 1) and heated oxygen sensor harness bracket. Refer to EM-34, "Exploded View".

c. Remove support bearing bracket.

INSTALLATION

Note the following, and install in the reverse order of removal.

- Always replace differential side oil seal with new one when installing drive shaft. Refer to TM-172, "2WD : Exploded View".
- Place the protector (A) [SST: KV38107900 (—)] onto transaxle assembly to prevent damage to the oil seal while inserting drive shaft. Slide drive shaft sliding joint and tap with a hammer to install securely.

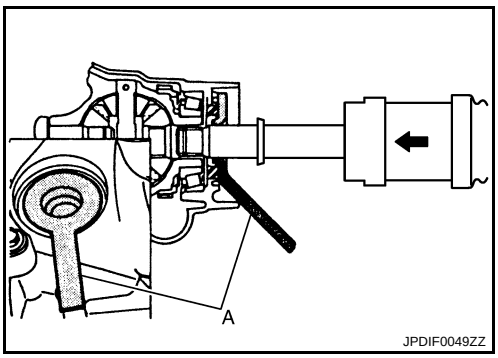

- Install support bearing bracket (1) in following procedure,
- Temporarily tighten mounting bolts (A), then tighten them to specified torque.
- Temporarily tighten mounting bolts (B), then tighten them to specified torque.

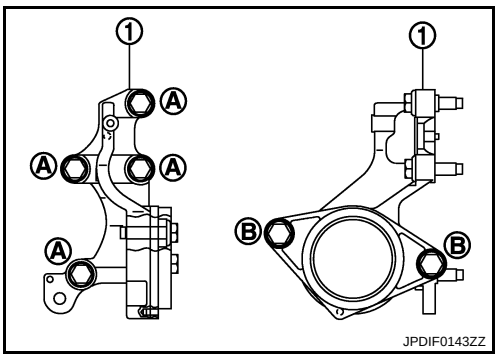

- Clean the matching surface of wheel hub lock nut and wheel hub and bearing assembly.
  CAUTION:
  Never apply lubricating oil to these matching surface.
- Clean the matching surface of drive shaft and wheel hub and bearing assembly.
  CAUTION:
  Apply paste [service parts (440037S000)] to cover entire flat surface (A) of joint sub-assembly of drive shaft.

  Standard

  Amount paste 0.2 – 1.0 g (0.008 – 0.035 oz)

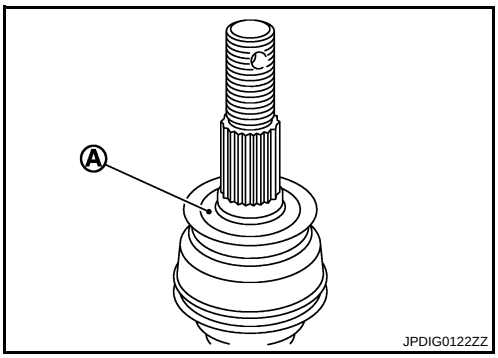

- Never use a power tool to tighten the wheel hub lock nut.
- Perform the final tightening of each of parts under unladen conditions, which were removed when removing wheel hub and bearing assembly and axle housing.
- Never reuse cotter pin.

WHEEL SIDE

WHEEL SIDE : Disassembly and Assembly

INFOID:0000000003452012

DISASSEMBLY

1. Fix shaft with a vise.
   CAUTION:
   Protect shaft when fixing with a vise using aluminum or copper plates.
2. Remove boot bands, and then remove boot from joint sub-assembly.
3. Screw drive shaft puller (A) into joint sub-assembly screw part to a length of 30 mm (1.18 in) or more. Support drive shaft with one hand and pull out joint sub-assembly with a sliding hammer (B) from housing assembly.
   CAUTION:
   - **Align a sliding hammer and drive shaft and remove them by pulling firmly and uniformly.**
   - **If joint sub-assembly cannot be pulled out, try after removing drive shaft from vehicle.**
4. Remove circular clip (1) from housing assembly.
5. Remove boot from housing assembly.

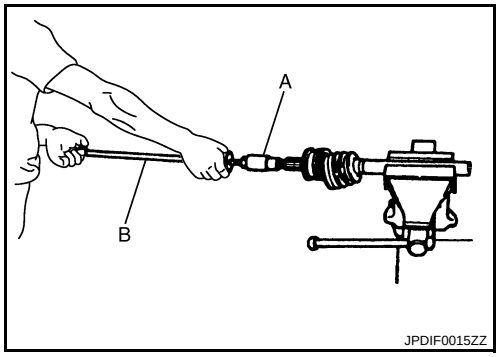

ASSEMBLY

1. Clean the old grease on joint sub-assembly with paper waste.
2. Fill serration slot joint sub-assembly with NISSAN genuine grease or equivalent until the serration slot and ball groove become full to the brim.
   CAUTION:
   After applying grease, use a paper waste to wipe off old grease that has oozed out.
3. Install boot and boot bands to housing assembly.
   CAUTION:
   - **Wrap serration on housing assembly with tape to protect the boot from damage.**
   - **Never reuse boot and boot band.**
4. Remove the tape wrapped around the serration on housing assembly.
5. Position the circular clip on groove at the housing assembly edge.
   CAUTION:
   Never reuse circular clip.
   NOTE:
   Drive joint inserter is recommended when installing circular clip.
6. Align both center axles of the housing assembly edge and joint sub-assembly. Then assemble housing assembly with joint sub-assembly holding circular clip.
7. Install joint sub-assembly (1) to housing assembly using plastic hammer.
   CAUTION:
   Confirm that joint sub-assembly is correctly engaged while rotating drive housing assembly.
8. Apply the specified amount of grease into the boot inside from large diameter side of boot.

   Standard
   Grease amount : Refer to FAX-28, "Drive Shaft".

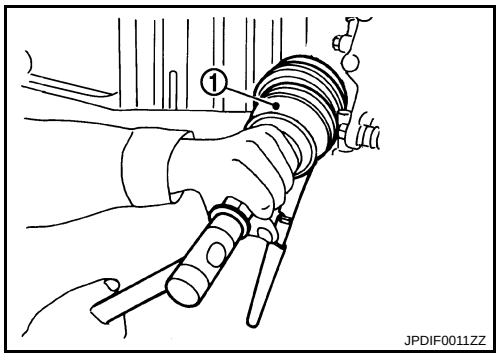

9. Install the boot securely into grooves (indicated by "*" marks) shown in the figure.
   CAUTION:
   If grease adheres to the boot mounting surface (indicated by "*" mark) on the housing assembly or joint sub-assembly, boot may be removed. Remove all grease from the boot mounting surface.
10. To prevent the deformation of the boot, adjust the boot installation length (L) to the specified value shown below by inserting the suitable tool into inside of the boot from the large diameter side of the boot and discharging the inside air.

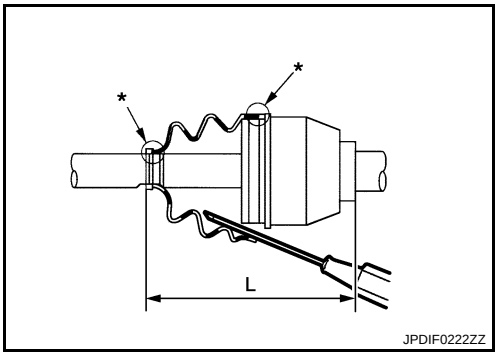

Standard

L : Refer to FAX-28, "Drive Shaft".

CAUTION:
- **If the boot mounting length exceeds the standard, it may cause breakage of boot.**
- **Be careful not to touch the inside of the boot with a tip of tool.**

11. Secure the large and small ends of the boot with boot bands using the boot band crimping tool (A) [SST: KV40107300 (—)].
    CAUTION:
    Never reuse boot band.

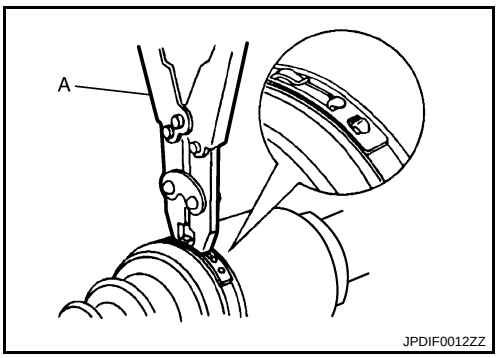

NOTE:
Secure boot band so that dimension (M) meets the specification as shown in the figure.

Standard

M : 1.0 – 4.0 mm (0.039 – 0.157 in)

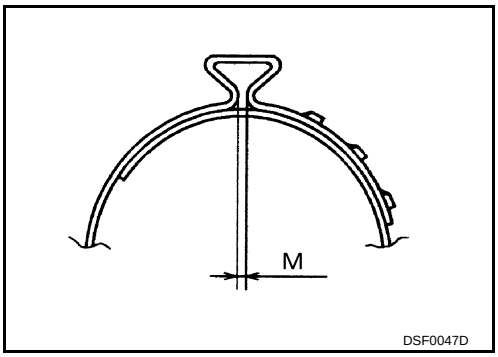

12. Secure joint sub-assembly and housing assembly, and then make sure that they are in the correct position when rotating boot. Reinstall them using boot bands when boot installation positions become incorrect.
    CAUTION:
    Never reuse boot band.

TRANSAXLE SIDE

TRANSAXLE SIDE : Disassembly and Assembly

INFOID:0000000003452013

DISASSEMBLY

Left Side

1. Fix drive shaft with a vise.
   CAUTION:
   Protect shaft using aluminum or copper plates when fixing with a vise.
2. Disassemble boot (wheel side). Refer to FAX-21, "WHEEL SIDE : Disassembly and Assembly".
3. Remove boot bands and boot (transaxle side).

Right Side

1. Fix drive shaft with a vise.
   CAUTION:

Protect shaft using aluminum or copper plates when fixing with a vise.

2. Disassemble boot (wheel side). Refer to FAX-21, "WHEEL SIDE : Disassembly and Assembly".
3. Remove boot bands and boot (transaxle side).
4. Remove support bearing, follow the procedure described below.

a. Remove dust shield.

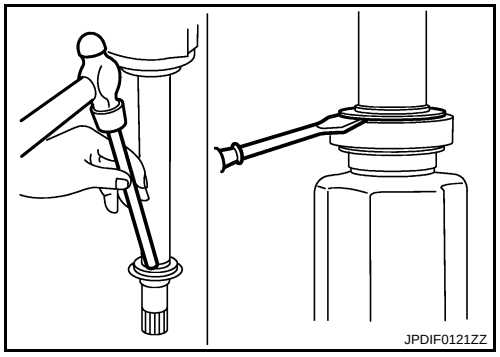

b. Remove snap ring (1).

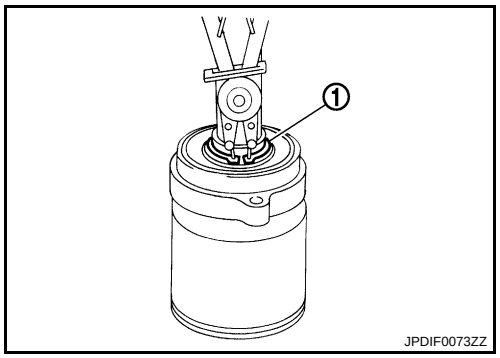

c. Press out bearing housing and support bearing from housing assembly.
d. Remove dust shield.

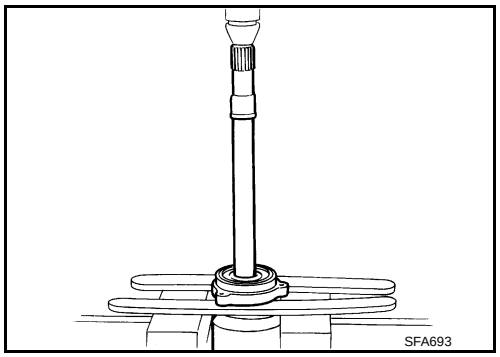

e. Remove snap ring (1).

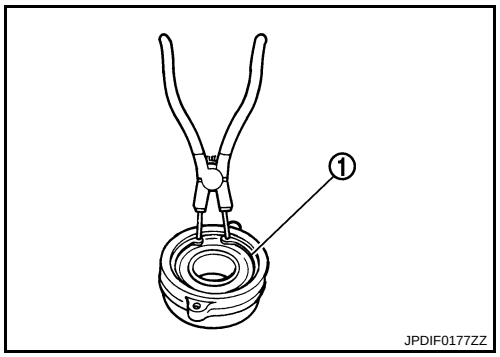

f. Press out support bearing from bearing housing (1) with suitable drift (A) [SST: ST35271000 (—)].

5. Remove dynamic damper, follow the procedure described below.

a. Remove damper bands.

b. Remove dynamic damper from shaft.

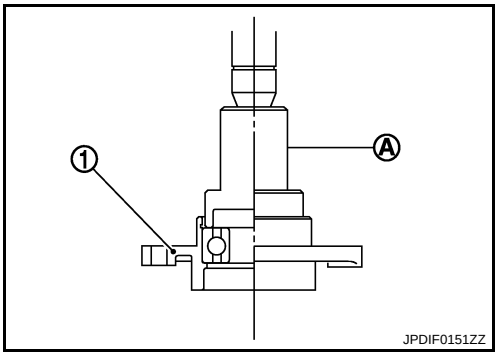

ASSEMBLY

Left Side

1. Install dust shield.
   CAUTION:
   Never reuse dust shield.
2. Install circular clip.
   CAUTION:
   Never reuse circular clip.
3. Clean old grease on housing assembly with paper waste.
4. Install boot securely into grooves (indicated by “*” marks) shown in the figure.
   CAUTION:
   If grease adheres to the boot mounting surface (indicated by “*” mark) on housing assembly, boot may be removed. Remove all grease from the boot mounting surface.
5. To prevent the deformation of the boot, adjust the boot installation length (L) to the specified value shown below by inserting the suitable tool into the inside of boot from the large diameter side of boot and discharging inside air.

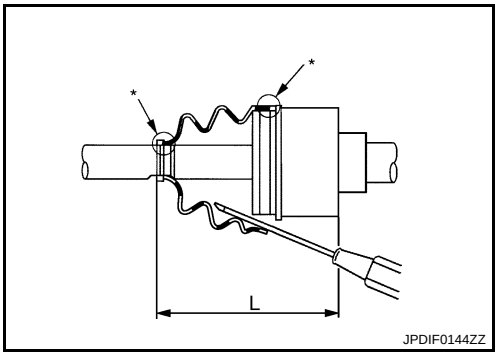

Standard

L **: Refer to FAX-28, "Drive Shaft".**

CAUTION:
- **If the boot installation length exceeds the standard, it may cause breakage of boot.**
- **Be careful not to touch the inside of the boot with the tip of tool.**

6. Install boot bands securely as shown in the figure.

a. Put boot band in the groove on drive shaft boot. Then fit pawls (⬅) into holes to temporary installation.
   NOTE:
   For the large diameter side, fit projection (A) and guide slit (B) at first.

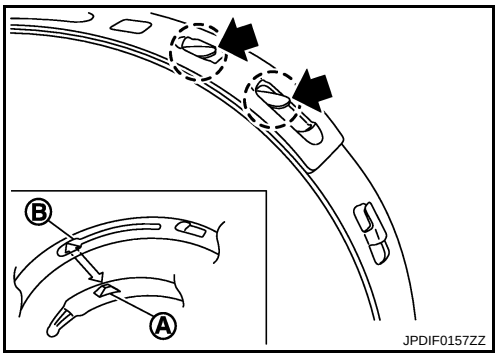

b. Pinch projection on the band with suitable pliers to tighten band.
c. Insert tip of band below end of the pawl.
7. Secure housing assembly, and then make sure that they are in the correct position when rotating boot. Reinstall them with boot bands when the mounting positions become incorrect.

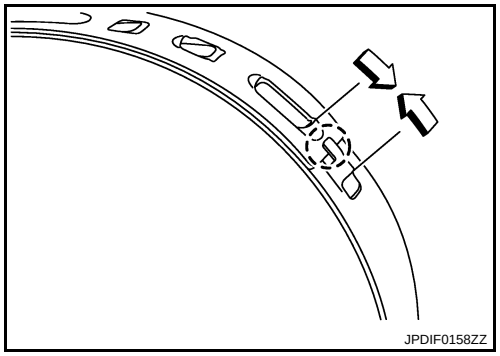

Right Side

1. Install dust shield.
   CAUTION:
   Never reuse dust shield.
2. Install circular clip.
   CAUTION:
   Never reuse circular clip.
3. Install support bearing, follow the procedure described below.

a. Press support bearing to bearing housing (1) with suitable drift (A) [SST: ST35271000 (—)].

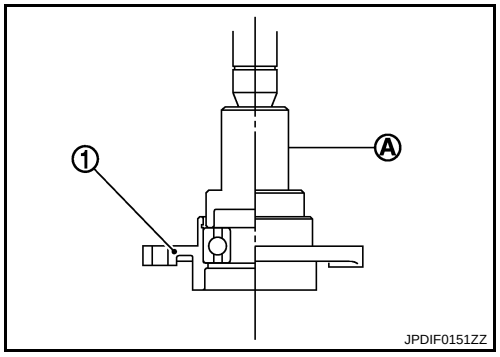

b. Install snap ring (1).
   CAUTION:
   Never reuse snap ring.
c. Install bearing housing and support bearing to housing assembly.

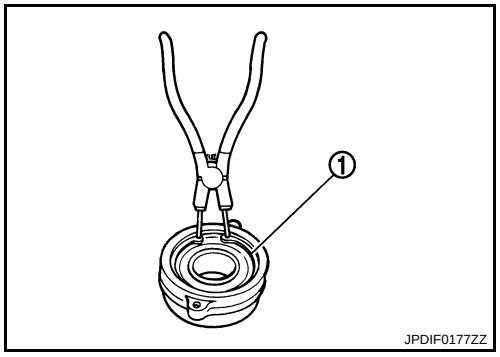

d. Install snap ring (1).
   CAUTION:
   Never reuse snap ring.

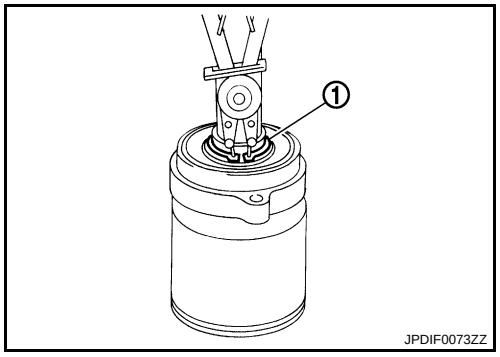

e. Install dust shields.
CAUTION:
Never reuse dust shields.

4. Clean old grease on housing assembly with paper waste.

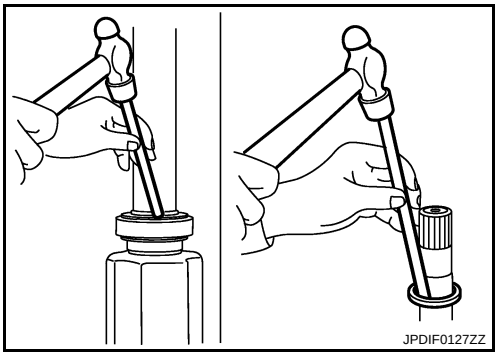

5. Install boot securely into grooves (indicated by "*" marks) shown in the figure.
CAUTION:
If grease adheres to the boot mounting surface (indicated by "*" mark) on housing assembly, boot may be removed. Remove all grease from the boot mounting surface.

6. To prevent from deformation of the boot, adjust the boot installation length (L) to the specified value shown below by inserting the suitable tool into the inside of boot from the large diameter side of boot and discharging inside air.

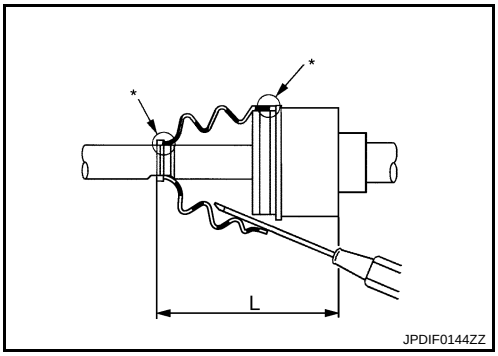

Standard

L **: Refer to FAX-28, "Drive Shaft".**

CAUTION:
- **If the boot installation length exceeds the standard, it may cause breakage of boot.**
- **Be careful not to touch the inside of the boot with the tip of tool.**

7. Install boot bands securely as shown in the figure.

a. Put boot band in the groove on drive shaft boot. Then fit pawls (⬅) into holes to temporary installation.
NOTE:
For the large diameter side, fit projection (A) and guide slit (B) at first.

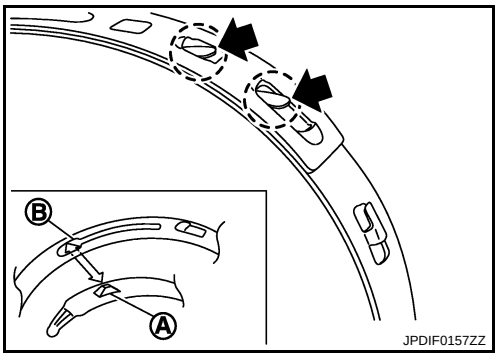

b. Pinch projection on the band with suitable pliers to tighten band.

c. Insert tip of band below end of the pawl.

8. Secure housing assembly, and then make sure that they are in the correct position when rotating boot. Reinstall them with boot bands when the mounting positions become incorrect.

9. Assemble boot (wheel side) and joint sub-assembly. Refer to FAX-21, "WHEEL SIDE : Disassembly and Assembly".

10. Install dynamic damper, follow the procedure described below.

a. Install dynamic damper to shaft.

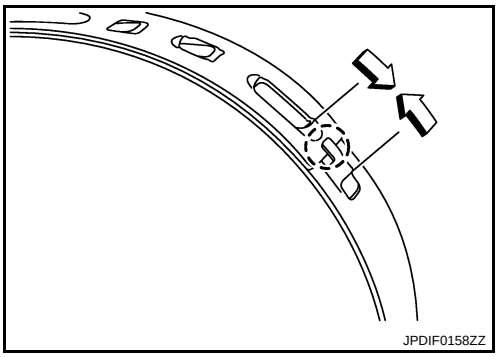

b. Secure dynamic damper with bands in the following specified position (A) when installing.
CAUTION:
Never reuse bands.

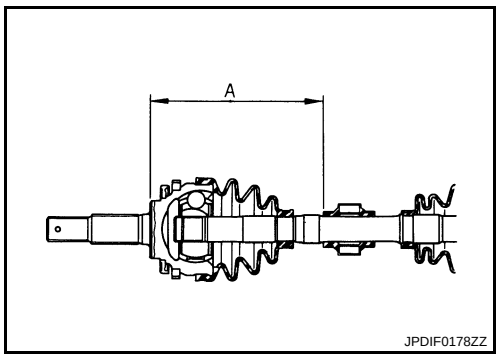

Standard

A : Refer to FAX-28, "Drive Shaft".

Inspection

INFOID:0000000003372889

INSPECTION AFTER REMOVAL

- Move joint up/down, left/right, and in the axial directions. Check for motion that is not smooth and for significant looseness.
- Check boot for cracks, damage, and leakage of grease.
- Disassemble drive shaft and exchange malfunctioning part if there is a non-standard condition.

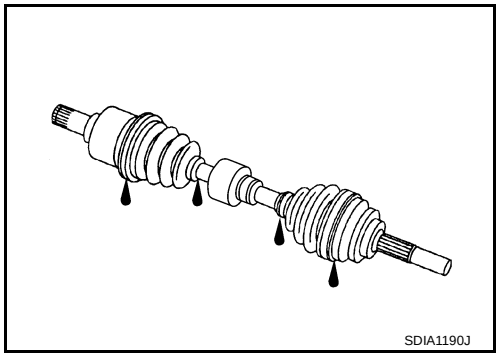

INSPECTION AFTER DISASSEMBLY

Shaft
Check shaft for runout, cracks, or other damage. Replace if necessary.

Dynamic Damper
Check damper for cracks or wear. Replace if necessary.

Joint Sub-Assembly (Wheel Side)
Check the following:
- Joint sub-assembly for rough rotation and excessive axial looseness.
- The inside of the joint sub-assembly for entry of foreign material.
- Joint sub-assembly for compression scars, cracks, and fractures inside of joint sub-assembly.

Replace joint sub-assembly if there are any non-standard conditions of components.

Housing Assembly (Transaxle Side)
Replace housing assembly if there is scratching or wear of housing assembly roller contact surface.

Support Bearing (Right Side)
Make sure wheel bearing rolls freely and is free from noise, cracks, pitting or wear. Replace support bearing if there are any non-standard conditions.

Support Bearing Bracket (Right Side)
Check for bending, cracks, or damage. Replace support bearing bracket if there are any non-standard conditions.

SERVICE DATA AND SPECIFICATIONS (SDS)

SERVICE DATA AND SPECIFICATIONS (SDS)

Wheel Bearing

INFOID:0000000003372890

Item	Standard
Axial end play	0.05 mm (0.002 in) or less

Drive Shaft

INFOID:0000000003372891

Item		Left side	Right side
Grease quantity	Wheel side	170 – 190 g (6.00 – 6.70 oz)	
	Transaxle side	155 – 175 g (5.47 – 6.17 oz)	
Boots installed length	Wheel side	158.6 mm (6.24 in)	
	Transaxle side	163.67 mm (6.44 in)	
Dimension of dynamic damper		—	202 – 208 mm (7.95 – 8.19 in)

SYMPTOM DIAGNOSIS

NOISE, VIBRATION AND HARSHNESS (NVH) TROUBLESHOOTING

NVH Troubleshooting Chart

INFOID:0000000003372892

Use chart below to find the cause of the symptom. If necessary, repair or replace these parts.

Possible cause and SUSPECTED PARTS			Excessive joint angle	Joint sliding resistance	Imbalance	Improper installation, looseness	Parts interference	Wheel bearing damage	FRONT AXLE AND FRONT SUSPENSION	FRONT AXLE	TIRE	ROAD WHEEL	DRIVE SHAFT	BRAKE	STEERING
Reference page			—	FAX-53	—	FAX-37	—	FAX-35	NVH in FAX and FSU sections	Refer to Front axle in this chart	NVH in WT section	NVH in WT section	Refer to DRIVE SHAFT in this chart	NVH in BR section	NVH in ST section
Symptom	DRIVE SHAFT	Noise	×	×				×	×	×	×	×		×	×
		Shake	×		×			×	×	×	×	×		×	×
	FRONT AXLE	Noise				×	×	×	×		×	×	×	×	×
		Shake				×	×	×	×		×	×	×	×	×
		Vibration				×	×	×	×		×		×		×
		Shimmy				×	×		×		×	×		×	×
		Judder				×			×		×	×		×	×
		Poor quality ride or handling				×	×		×		×	×			

×: Applicable

PRECAUTION

PRECAUTIONS

FOR USA AND CANADA

FOR USA AND CANADA : Precaution for Supplemental Restraint System (SRS) "AIR BAG" and "SEAT BELT PRE-TENSIONER"

INFOID:0000000004755088

The Supplemental Restraint System such as “AIR BAG” and “SEAT BELT PRE-TENSIONER”, used along with a front seat belt, helps to reduce the risk or severity of injury to the driver and front passenger for certain types of collision. This system includes seat belt switch inputs and dual stage front air bag modules. The SRS system uses the seat belt switches to determine the front air bag deployment, and may only deploy one front air bag, depending on the severity of a collision and whether the front occupants are belted or unbelted.
Information necessary to service the system safely is included in the “SRS AIRBAG” and “SEAT BELT” of this Service Manual.

WARNING:

- **To avoid rendering the SRS inoperative, which could increase the risk of personal injury or death in the event of a collision which would result in air bag inflation, all maintenance must be performed by an authorized NISSAN/INFINITI dealer.**
- **Improper maintenance, including incorrect removal and installation of the SRS, can lead to personal injury caused by unintentional activation of the system. For removal of Spiral Cable and Air Bag Module, see the “SRS AIRBAG”.**
- **Never use electrical test equipment on any circuit related to the SRS unless instructed to in this Service Manual. SRS wiring harnesses can be identified by yellow and/or orange harnesses or harness connectors.**

PRECAUTIONS WHEN USING POWER TOOLS (AIR OR ELECTRIC) AND HAMMERS

When working near the Airbag Diagnosis Sensor Unit or other Airbag System sensors while ignition switch is ON or engine is running, never use air or electric power tools or strike near the sensor(s) with a hammer. Heavy vibration may activate the sensor(s), deploy the airbag(s), possibly cause serious injury.
When using air or electric power tools or hammers, always turn OFF ignition switch, disconnect the battery, and wait 3 minutes or more before performing any service.

FOR USA AND CANADA : Precaution Necessary for Steering Wheel Rotation after Battery Disconnect

INFOID:0000000004755084

NOTE:

- Before removing and installing any control units, first turn the push-button ignition switch to the LOCK position, then disconnect both battery cables.
- After finishing work, confirm that all control unit connectors are connected properly, then re-connect both battery cables.
- Always use CONSULT-III to perform self-diagnosis as a part of each function inspection after finishing work. If a DTC is detected, perform trouble diagnosis according to self-diagnosis results.

This vehicle is equipped with a push-button ignition switch and a steering lock unit.
If the battery is disconnected or discharged, the steering wheel will lock and cannot be turned.
If turning the steering wheel is required with the battery disconnected or discharged, follow the procedure below before starting the repair operation.

OPERATION PROCEDURE

1. Connect both battery cables.
   NOTE:
   Supply power using jumper cables if battery is discharged.
2. Turn the push-button ignition switch to ACC position.
   (At this time, the steering lock will be released.)
3. Disconnect both battery cables. The steering lock will remain released with both battery cables disconnected and the steering wheel can be turned.
4. Perform the necessary repair operation.

5. When the repair work is completed, re-connect both battery cables. With the brake pedal released, turn the push-button ignition switch from ACC position to ON position, then to LOCK position. (The steering wheel will lock when the push-button ignition switch is turned to LOCK position.)
6. Perform self-diagnosis check of all control units using CONSULT-III.

FOR USA AND CANADA : Precautions for Drive Shaft

INFOID:0000000004578876

- Observe the following precautions when disassembling and assembling drive shaft.
- Never disassemble joint sub-assembly because it is non-overhaul parts.
- Perform work in a location which is as dust-free as possible.
- Clean the parts, before disassembling and assembling.
- Prevent the entry of foreign objects during disassembly of the service location.
- Reassemble disassembled parts carefully in the correct order. If work is interrupted, a clean cover must be placed over parts.
- Use paper waste. Fabric shop cloths must not be used because of the danger of lint adhering to parts.
- Clean disassembled parts (except for rubber parts) with kerosene which shall be removed by blowing with air or wiping with paper waste.

FOR MEXICO

FOR MEXICO : Precaution for Supplemental Restraint System (SRS) "AIR BAG" and "SEAT BELT PRE-TENSIONER"

INFOID:0000000004755086

The Supplemental Restraint System such as “AIR BAG” and “SEAT BELT PRE-TENSIONER”, used along with a front seat belt, helps to reduce the risk or severity of injury to the driver and front passenger for certain types of collision. This system includes seat belt switch inputs and dual stage front air bag modules. The SRS system uses the seat belt switches to determine the front air bag deployment, and may only deploy one front air bag, depending on the severity of a collision and whether the front occupants are belted or unbelted.
Information necessary to service the system safely is included in the “SRS AIRBAG” and “SEAT BELT” of this Service Manual.

WARNING:

- **To avoid rendering the SRS inoperative, which could increase the risk of personal injury or death in the event of a collision which would result in air bag inflation, all maintenance must be performed by an authorized NISSAN/INFINITI dealer.**
- **Improper maintenance, including incorrect removal and installation of the SRS, can lead to personal injury caused by unintentional activation of the system. For removal of Spiral Cable and Air Bag Module, see the “SRS AIRBAG”.**
- **Never use electrical test equipment on any circuit related to the SRS unless instructed to in this Service Manual. SRS wiring harnesses can be identified by yellow and/or orange harnesses or harness connectors.**

PRECAUTIONS WHEN USING POWER TOOLS (AIR OR ELECTRIC) AND HAMMERS

When working near the Airbag Diagnosis Sensor Unit or other Airbag System sensors while ignition switch is ON or engine is running, never use air or electric power tools or strike near the sensor(s) with a hammer. Heavy vibration may activate the sensor(s), deploy the airbag(s), possibly cause serious injury.
When using air or electric power tools or hammers, always turn OFF ignition switch, disconnect the battery, and wait 3 minutes or more before performing any service.

FOR MEXICO : Precaution Necessary for Steering Wheel Rotation after Battery Disconnect

INFOID:0000000004755085

NOTE:

- Before removing and installing any control units, first turn the push-button ignition switch to the LOCK position, then disconnect both battery cables.
- After finishing work, confirm that all control unit connectors are connected properly, then re-connect both battery cables.
- Always use CONSULT-III to perform self-diagnosis as a part of each function inspection after finishing work. If a DTC is detected, perform trouble diagnosis according to self-diagnosis results.

This vehicle is equipped with a push-button ignition switch and a steering lock unit.
If the battery is disconnected or discharged, the steering wheel will lock and cannot be turned.
If turning the steering wheel is required with the battery disconnected or discharged, follow the procedure below before starting the repair operation.

OPERATION PROCEDURE

1. Connect both battery cables.
   NOTE:
   Supply power using jumper cables if battery is discharged.
2. Turn the push-button ignition switch to ACC position.
   (At this time, the steering lock will be released.)
3. Disconnect both battery cables. The steering lock will remain released with both battery cables disconnected and the steering wheel can be turned.
4. Perform the necessary repair operation.
5. When the repair work is completed, re-connect both battery cables. With the brake pedal released, turn the push-button ignition switch from ACC position to ON position, then to LOCK position. (The steering wheel will lock when the push-button ignition switch is turned to LOCK position.)
6. Perform self-diagnosis check of all control units using CONSULT-III.

FOR MEXICO : Precautions for Drive Shaft

INFOID:0000000004754891

- Observe the following precautions when disassembling and assembling drive shaft.
- Never disassemble joint sub-assembly because it is non-overhaul parts.
- Perform work in a location which is as dust-free as possible.
- Clean the parts, before disassembling and assembling.
- Prevent the entry of foreign objects during disassembly of the service location.
- Reassemble disassembled parts carefully in the correct order. If work is interrupted, a clean cover must be placed over parts.
- Use paper waste. Fabric shop cloths must not be used because of the danger of lint adhering to parts.
- Clean disassembled parts (except for rubber parts) with kerosene which shall be removed by blowing with air or wiping with paper waste.

PREPARATION

PREPARATION

Special Service Tool

INFOID:0000000003372899

The actual shapes of Kent-More tools may differ from those of special service tools illustrated here.

Tool number (Kent-More No.) Tool name		Description
KV40107300 (—) Boot band crimping tool	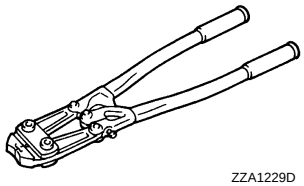	Installing boot band
KV40107500 (—) Drive shaft attachment		Removing drive shaft
KV38107900 (—) Protector a: ϕ32 mm (1.26 in) dia.	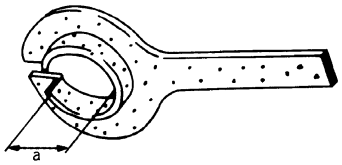	Installing drive shaft
ST35271000 (—) Drift a: ϕ72 mm (2.83 in) dia. b: ϕ63 mm (2.48 in) dia.	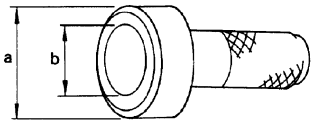	• Install oil seal • Install support bearing
ST1712000 (—) Drift a: ϕ32 mm (1.26 in) dia. b: ϕ60 mm (2.36 in) dia.	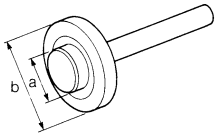	Remove support bearing

Commercial Service Tool

INFOID:0000000003372900

Tool name	Description
Power tool 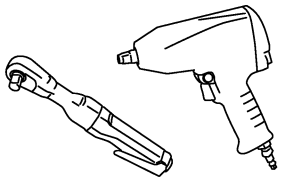 PBIC0190E	Loosening bolts and nuts

ON-VEHICLE MAINTENANCE

FRONT WHEEL HUB AND KNUCKLE

Inspection

INFOID:0000000003372901

MOUNTING INSPECTION

Make sure that the mounting conditions (looseness, backlash) of each component and component conditions (wear, damage) are normal.

WHEEL BEARING INSPECTION

- Move wheel hub and bearing assembly in the axial direction by hand. Make sure there is no looseness of wheel bearing.

Standard

Axial end play **: Refer to FAX-54, "Wheel Bearing".**

- Rotate wheel hub and bearing assembly and make sure there is no unusual noise or other irregular conditions. If there is any of irregular conditions, replace wheel hub and bearing assembly.

FRONT DRIVE SHAFT

Inspection

INFOID:0000000003372902

- Check drive shaft mounting point and joint for looseness and other damage.
- Check boot for cracks and other damage.
  CAUTION:
  Replace entire drive shaft assembly when noise or vibration occurs from drive shaft.

ON-VEHICLE REPAIR

FRONT WHEEL HUB AND KNUCKLE

Exploded View

INFOID:0000000003372903

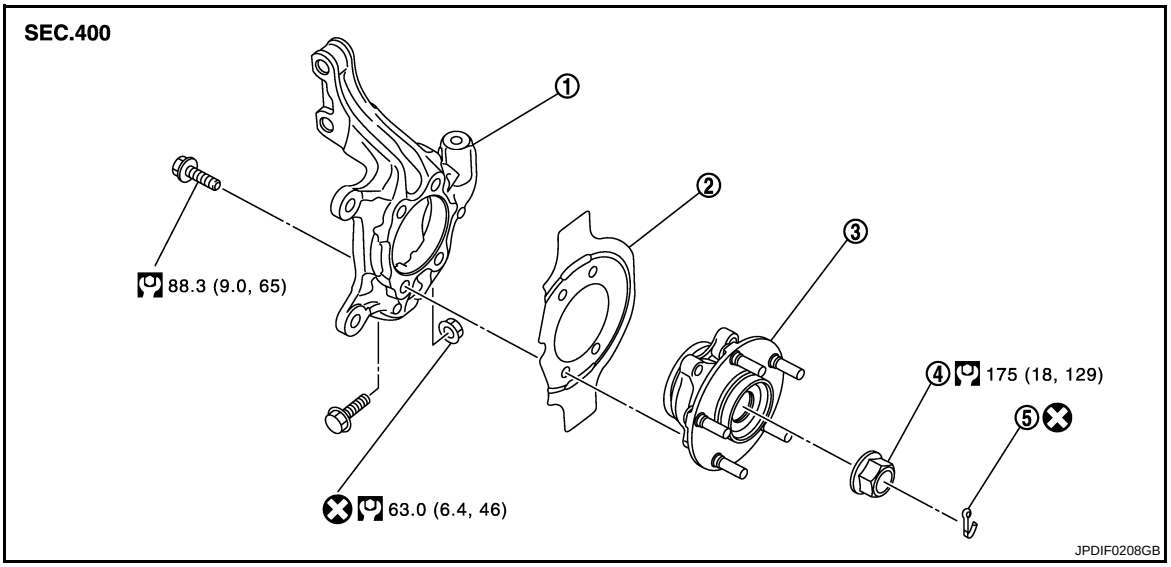

1. Steering knuckle
2. Splash guard
3. Wheel hub and bearing assembly
4. Wheel hub lock nut
5. Cotter pin

Refer to GI-4, "Components" for symbols in the figure.

Removal and Installation

INFOID:0000000003372904

REMOVAL

1. Remove tires with power tool.
2. Remove wheel sensor and sensor harness. Refer to BRC-114, "FRONT WHEEL SENSOR : Exploded View".
3. Remove lock plate from strut assembly. Refer to BR-22, "FRONT : Exploded View".
4. Remove caliper assembly. Hang caliper assembly not to interfere with work. Refer to BR-36, "BRAKE CALIPER ASSEMBLY : Exploded View".
   CAUTION:
   Never depress brake pedal while brake caliper is removed.
5. Remove disc rotor. Refer to BR-37, "BRAKE CALIPER ASSEMBLY : Removal and Installation".
6. Remove cotter pin, and then loosen wheel hub lock nut with power tool.
7. Patch wheel hub lock nut with a piece of wood. Hammer the wood to disengage wheel hub and bearing assembly from drive shaft.
   CAUTION:
   - **Never place drive shaft joint at an extreme angle. Also be careful not to overextend slide joint.**
   - **Never allow drive shaft to hang down without support for joint sub-assembly, shaft and the other parts.**

   NOTE:
   Use suitable puller, if wheel hub and bearing assembly and drive shaft cannot be separated even after performing the above procedure.
8. Remove wheel hub lock nut.
9. Remove strut assembly from steering knuckle. Refer to FSU-10, "Exploded View".
10. Remove drive shaft from wheel hub and bearing assembly, suspend the drive shaft with suitable wire. Refer to FAX-44, "Exploded View".
11. Temporarily tighten strut assembly and steering knuckle.

12. Remove wheel hub and bearing assembly, and then remove splash guard.
13. Remove steering outer socket from steering knuckle. Refer to ST-24, "Exploded View".
14. Remove steering knuckle from transverse link.
15. Remove steering knuckle from steering knuckle.

INSTALLATION

Note the following, and install in the reverse order of the removal.

- Clean the matching surface of wheel hub lock nut and wheel hub and bearing assembly.
  CAUTION:
  Never apply lubricating oil to these matching surface.
- Clean the matching surface of drive shaft and wheel hub and bearing assembly.
  CAUTION:
  Apply paste [service parts (440037S000)] to cover entire flat surface (A) of joint sub-assembly of drive shaft.

  Standard

  Amount paste 0.2 – 1.0 g (0.008 – 0.035 oz)

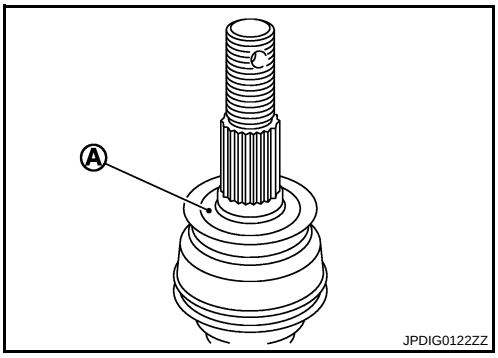

- Never use a power tool to tighten the wheel hub lock nut.
- Perform the final tightening of each of parts under unladen conditions, which were removed when removing wheel hub and bearing assembly and axle housing.
- Never reuse cotter pin.

Inspection

INFOID:0000000003372905

INSPECTION AFTER REMOVAL

Check components for deformation, cracks, and other damage. Replace if necessary.

Ball Joint Inspection

Check boots of transverse link and steering outer socket ball joint for breakage, axial play, and torque. Refer to FSU-12, "Inspection" and ST-34, "Inspection".

INSPECTION AFTER INSTALLATION

1. Check wheel sensor harness for proper connection. Refer to BRC-114, "FRONT WHEEL SENSOR : Exploded View".
2. Check the wheel alignment. Refer to FSU-9, "Inspection".
3. Adjust neutral position of steering angle sensor. Refer to BRC-9, "ADJUSTMENT OF STEERING ANGLE SENSOR NEUTRAL POSITION : Special Repair Requirement".

FRONT DRIVE SHAFT BOOT

Exploded View

INFOID:0000000003372906

LEFT SIDE

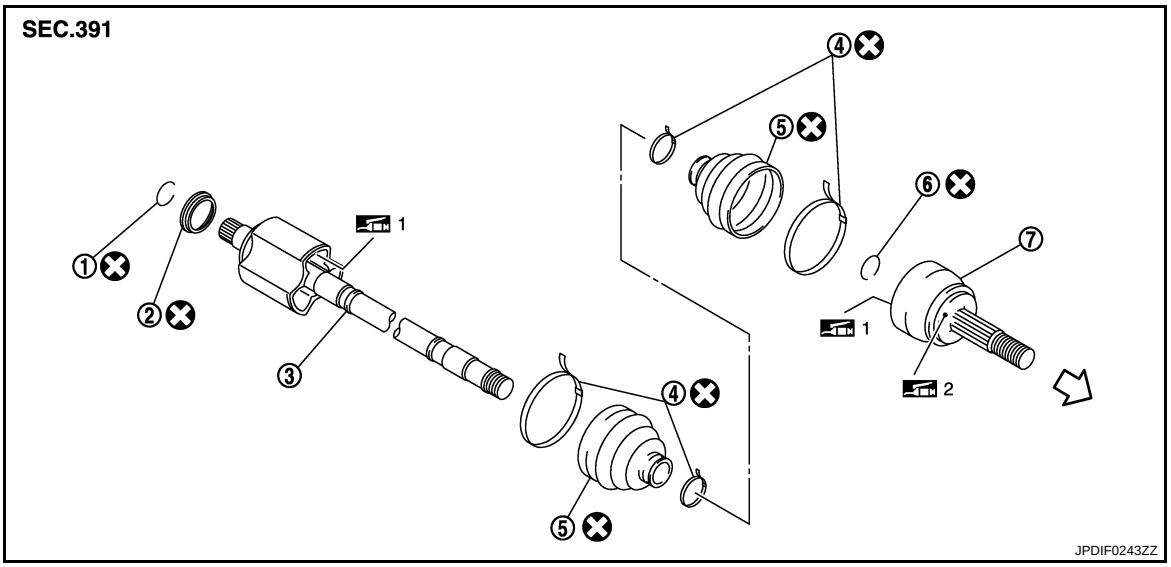

1. Circular clip
2. Dust shield
3. Housing assembly
4. Boot band
5. Boot
6. Circular clip
7. Joint sub-assembly

⇦ : Wheel side

1: Fill NISSAN Genuine grease or equivalent.

2: Apply paste [service parts(440037S000)].

Refer to GI-4, "Components" for symbols not described on the above.

RIGHT SIDE

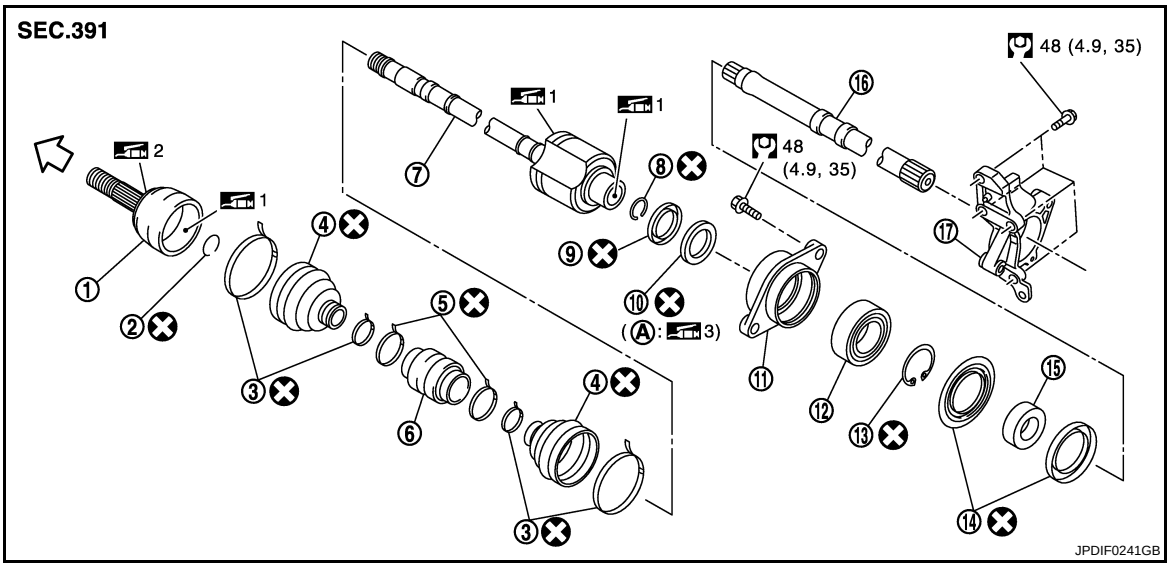

1. Joint sub-assembly
2. Circular clip
3. Boot band
4. Boot
5. Damper band
6. Dynamic damper
7. Housing assembly
8. Circular clip
9. Dust shield
10. Oil seal
11. Bearing housing
12. Bearing bracket

13. Snap ling
14. Dust shield
15. collor
16. Link shaft
17. Support bearing bracket

A: Oil seal lip

⇦ : Wheel side

1: Fill NISSAN Genuine grease or equivalent.

2: Apply paste [service parts(440037S000)].

3: Appy multi - purpose grease.

Refer to GI-4, "Components" for symbols not described on the above.

WHEEL SIDE

WHEEL SIDE : Removal and Installation

INFOID:0000000003452088

REMOVAL

1. Remove tires with power tool.
2. Remove wheel sensor and sensor harness. Refer to BRC-114, "FRONT WHEEL SENSOR : Exploded View".
3. Remove lock plate from strut assembly. Refer to BR-22, "FRONT : Exploded View".
4. Remove caliper assembly. Hang caliper assembly not to interfere with work. Refer to BR-36, "BRAKE CALIPER ASSEMBLY : Exploded View".
   CAUTION:
   Never depress brake pedal while brake caliper is removed.
5. Remove disc rotor. Refer to BR-37, "BRAKE CALIPER ASSEMBLY : Removal and Installation".
6. Remove cotter pin, and then loosen wheel hub lock nut with power tool. Refer to FAX-37, "Exploded View".
7. Patch wheel hub lock nut with a piece of wood. Hammer the wood to disengage wheel hub and bearing assembly from drive shaft.
   CAUTION:
   - **Never place drive shaft joint at an extreme angle. Also be careful not to overextend slide joint.**
   - **Never allow drive shaft to hang down without support for joint sub-assembly, housing assembly and the other parts.**

   NOTE:
   Use suitable puller, if wheel hub and bearing assembly and drive shaft cannot be separated even after performing the above procedure.
8. Remove wheel hub lock nut.
9. Remove strut assembly from steering knuckle. Refer to FSU-10, "Exploded View".
10. Remove drive shaft from wheel hub and bearing assembly.
11. Remove boot bands, and then remove boot from joint sub-assembly.
12. Screw drive shaft puller (A) into joint sub-assembly screw part to a length of 30 mm (1.18 in) or more. Support drive shaft with one hand and pull out joint sub-assembly with a sliding hammer (B) from housing assembly.
    CAUTION:
    - **Align a sliding hammer and drive shaft and remove them by pulling firmly and uniformly.**
    - **If joint sub-assembly cannot be pulled out, try after removing drive shaft from vehicle.**

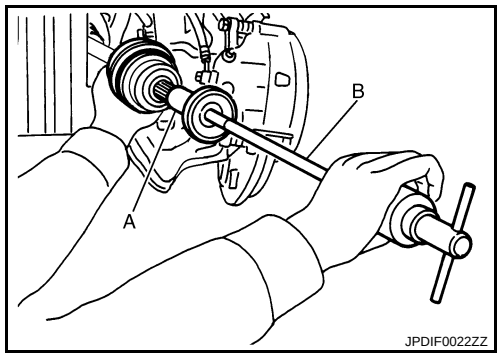

13. Remove circular clip (1) from housing assembly.
14. Remove boot from housing assembly.

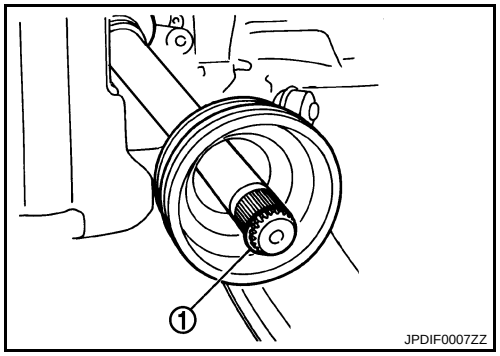

INSTALLATION

1. Clean the old grease on joint sub-assembly with paper waste.
2. Fill serration slot joint sub-assembly with NISSAN genuine grease or equivalent until the serration slot and ball groove become full to the brim.
   CAUTION:
   After applying grease, use a paper waste to wipe off old grease that has oozed out.
3. Install boot and boot bands to housing assembly.
   CAUTION:
   - **Wrap serration on housing assembly with tape to protect the boot from damage.**
   - **Never reuse boot and boot band.**
4. Remove the tape wrapped around the serration on housing assembly.
5. Position the circular clip on groove at the housing assembly edge.
   CAUTION:
   Never reuse circular clip.
   NOTE:
   Drive joint inserter is recommended when installing circular clip.
6. Align both center axles of the housing assembly edge and joint sub-assembly. Then assemble housing assembly with joint sub-assembly holding circular clip.
7. Install joint sub-assembly (1) to housing assembly using plastic hammer.
   CAUTION:
   Confirm that joint sub-assembly is correctly engaged while rotating drive housing assembly.
8. Apply the specified amount of grease into the boot inside from large diameter side of boot.

   Standard

   Grease amount : **Refer to FAX-54, "Drive Shaft".**

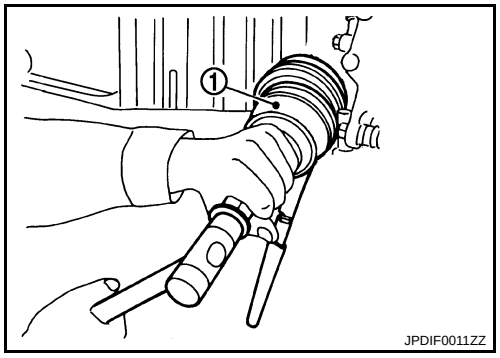

9. Install the boot securely into grooves (indicated by “*” marks) shown in the figure.
   CAUTION:
   If grease adheres to the boot mounting surface (indicated by “*” mark) on the housing assembly or joint sub-assembly, boot may be removed. Remove all grease from the boot mounting surface.
10. To prevent the deformation of the boot, adjust the boot installation length (L) to the specified value shown below by inserting the suitable tool into inside of the boot from the large diameter side of the boot and discharging the inside air.

   Standard

   L : **Refer to FAX-54, "Drive Shaft".**

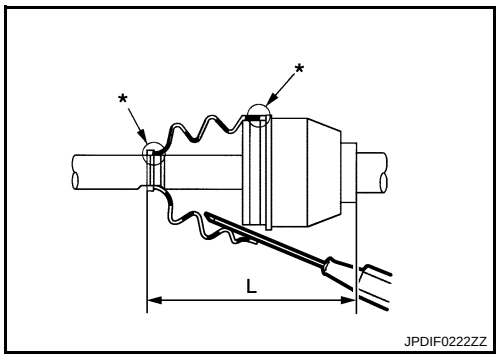

CAUTION:
- **If the boot mounting length exceeds the standard, it may cause breakage of boot.**
- **Be careful not to touch the inside of the boot with a tip of tool.**

11. Secure the large and small ends of the boot with boot bands using the boot band crimping tool (A) [SST: KV40107300 (—)].
CAUTION:
Never reuse boot band.

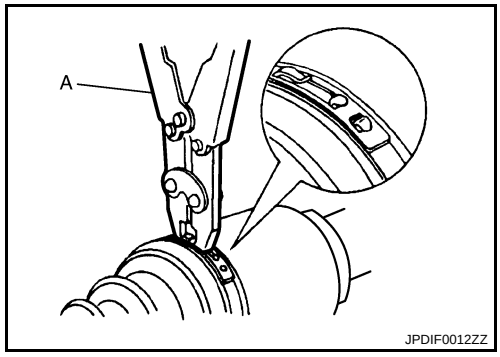

NOTE:
Secure boot band so that dimension (M) meets the specification as shown in the figure.

Standard

M : 1.0 – 4.0 mm (0.039 – 0.157 in)

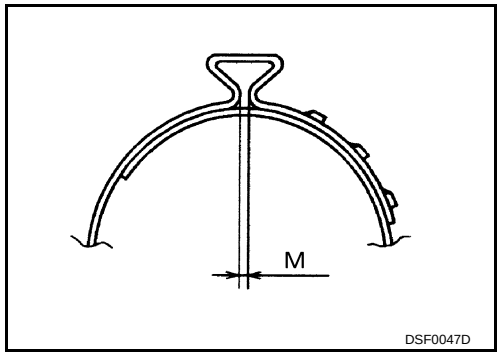

12. Secure joint sub-assembly and housing assembly, and then make sure that they are in the correct position when rotating boot. Reinstall them using boot bands when boot installation positions become incorrect.
CAUTION:
Never reuse boot band.
13. Clean the matching surface of wheel hub lock nut and wheel hub and bearing assembly.
CAUTION:
Never apply lubricating oil to these matching surface.
14. Clean the matching surface of drive shaft and wheel hub and bearing assembly.
CAUTION:
Apply paste [service parts (440037S000)] to cover entire flat surface (A) of joint sub-assembly of drive shaft.

Standard

Amount paste 0.2 – 1.0 g (0.008 – 0.035 oz)

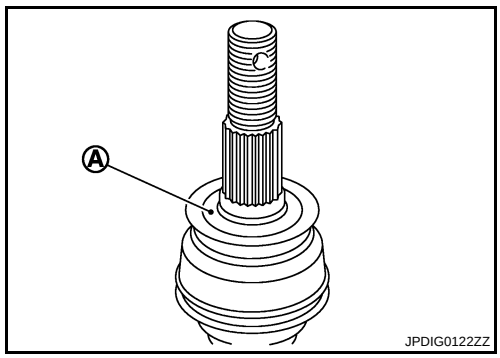

15. Insert drive shaft to wheel hub and bearing assembly, and then temporarily tighten wheel hub lock nut.
16. Install strut assembly to steering knuckle. Refer to FSU-10, "Exploded View".
17. Install disc rotor. Refer to BR-37, "BRAKE CALIPER ASSEMBLY : Removal and Installation".
18. Install caliper assembly to steering knuckle. Refer to BR-36, "BRAKE CALIPER ASSEMBLY : Exploded View".
19. Install lock plate to strut assembly. Refer to BR-22, "FRONT : Exploded View".
20. Install wheel sensor and sensor harness to steering knuckle. Refer to BRC-114, "FRONT WHEEL SENSOR : Exploded View".
21. Tighten the wheel hub lock nut to the specified torque. Refer to FAX-37, "Exploded View".
NOTE:
- Never use a power tool to tighten the wheel hub lock nut.
- Perform the final tightening of each of parts under unladen conditions, which were removed when removing wheel hub and bearing assembly and axle housing.

22. Install cotter pin. Refer to FAX-37, "Exploded View".
    CAUTION:
    - **Never reuse cotter pin.**
    - **Bend cotter pin at the root sufficiently to prevent any looseness.**

TRANSAXLE SIDE

TRANSAXLE SIDE : Removal and Installation

INFOID:0000000003452087

NOTE:
Remove boot after removing drive shaft. Refer to FAX-45, "LEFT SIDE : Removal and Installation" (left side), FAX-46, "RIGHT SIDE : Removal and Installation" (right side).

Inspection

INFOID:0000000003372908

INSPECTION AFTER REMOVAL

- Move joint up/down, left/right, and in the axial directions. Check for motion that is not smooth and for significant looseness.
- Check boot for cracks, damage, and leakage of grease.
- Disassemble drive shaft and exchange malfunctioning part if there is a non-standard condition.

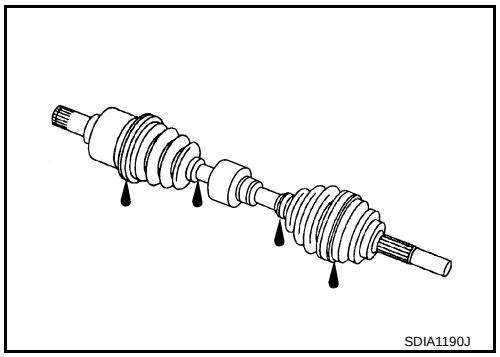

FRONT DRIVE SHAFT

Exploded View

INFOID:0000000004578874

LEFT SIDE

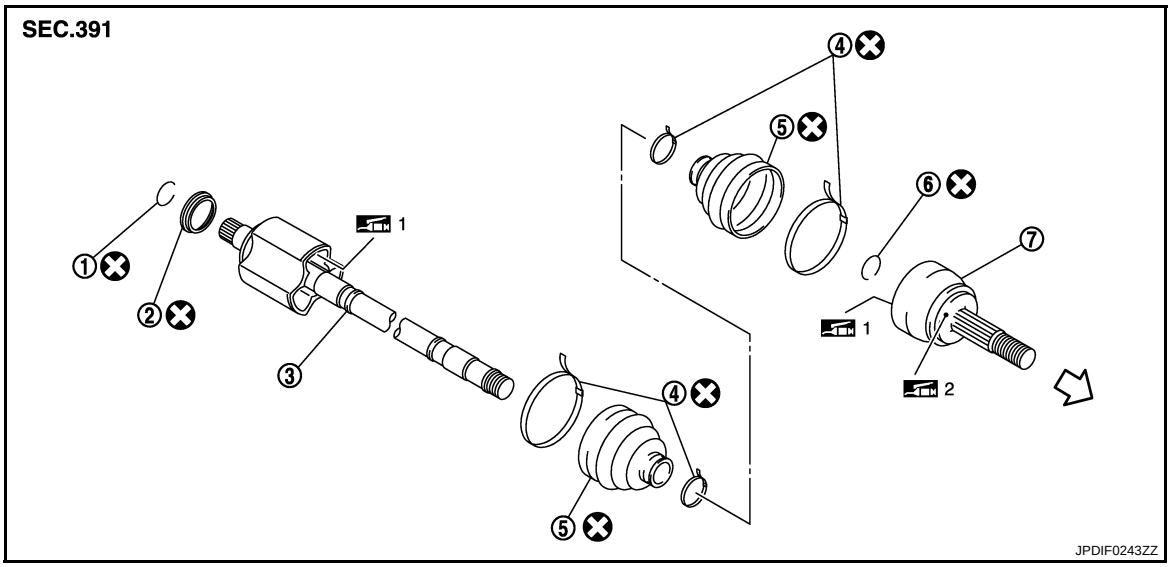

1. Circular clip
2. Dust shield
3. Housing assembly
4. Boot band
5. Boot
6. Circular clip
7. Joint sub-assembly

⇦ : Wheel side

1: Fill NISSAN Genuine grease or equivalent.

2: Apply paste [service parts(440037S000)].

Refer to GI-4, "Components" for symbols not described on the above.

RIGHT SIDE

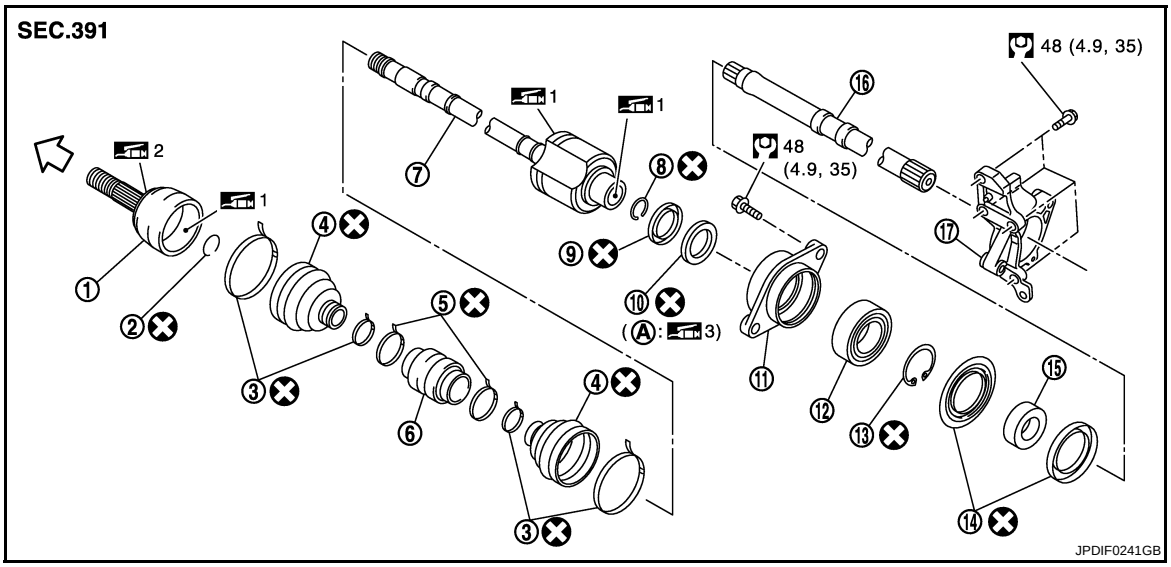

1. Joint sub-assembly
2. Circular clip
3. Boot band
4. Boot
5. Damper band
6. Dynamic damper
7. Housing assembly
8. Circular clip
9. Dust shield
10. Oil seal
11. Bearing housing
12. Bearing bracket

13. Snap ling
14. Dust shield
15. collor
16. Link shaft
17. Support bearing bracket

A: Oil seal lip

⇦ : Wheel side

1: Fill NISSAN Genuine grease or equivalent.

2: Apply paste [service parts(440037S000)].

3: Appy multi - purpose grease.

Refer to GI-4, "Components" for symbols not described on the above.

LEFT SIDE

LEFT SIDE : Removal and Installation

INFOID:0000000003579541

REMOVAL

1. Remove tires with power tool.
2. Remove wheel sensor and sensor harness. Refer to BRC-114, "FRONT WHEEL SENSOR : Exploded View".
3. Remove lock plate from strut assembly. Refer to BR-22, "FRONT : Exploded View".
4. Remove caliper assembly. Hang caliper assembly not to interfere with work. Refer to BR-36, "BRAKE CALIPER ASSEMBLY : Exploded View".
   CAUTION:
   Never depress brake pedal while brake caliper is removed.
5. Remove disc rotor. Refer to BR-37, "BRAKE CALIPER ASSEMBLY : Removal and Installation".
6. Remove cotter pin, and then loosen wheel hub lock nut with power tool.
7. Patch wheel hub lock nut with a piece of wood. Hammer the wood to disengage wheel hub and bearing assembly from drive shaft.
   CAUTION:
   - **Never place drive shaft joint at an extreme angle. Also be careful not to overextend slide joint.**
   - **Never allow drive shaft to hang down without support for joint sub-assembly, housing assembly and the other parts.**

   NOTE:
   Use suitable puller, if wheel hub and bearing assembly and drive shaft cannot be separated even after performing the above procedure.
8. Remove wheel hub lock nut.
9. Remove strut assembly from steering knuckle. Refer to FSU-10, "Exploded View".
10. Remove drive shaft from transaxle assembly.
    - Use the drive shaft attachment (A) [SST: KV40107500 (—)] and a sliding hammer (B) while inserting tip of the drive shaft attachment between housing assembly and transaxle assembly.
      CAUTION:
      Never place drive shaft joint at an extreme angle when removing drive shaft. Also be careful not to overextend slide joint.

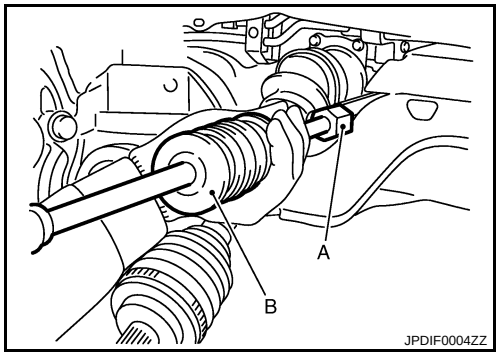

INSTALLATION

Note the following, and install in the reverse order of removal.

- Always replace differential side oil seal with new one when installing drive shaft. Refer to TM-173, "AWD : Exploded View".

- Place the protector (A) [SST: KV38107900 (—)] onto transaxle assembly to prevent damage to the oil seal while inserting drive shaft. Slide drive shaft sliding joint and tap with a hammer to install securely.
  CAUTION:
  Make sure that circular clip is completely engaged.

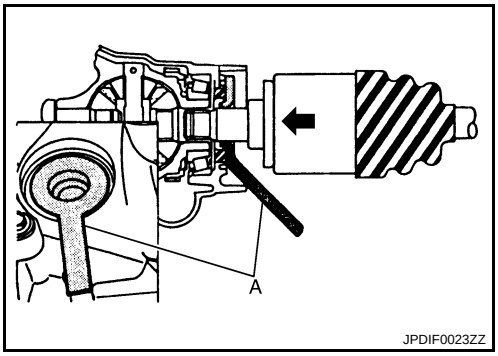

- Clean the matching surface of wheel hub lock nut and wheel hub and bearing assembly.
  CAUTION:
  Never apply lubricating oil to these matching surface.
- Clean the matching surface of drive shaft and wheel hub and bearing assembly.
  CAUTION:
  Apply paste [service parts (440037S000)] to cover entire flat surface (A) of joint sub-assembly of drive shaft.

  Standard

  Amount paste 0.2 – 1.0 g (0.008 – 0.035 oz)

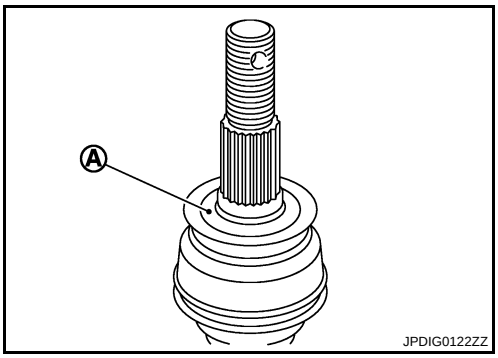

- Never use a power tool to tighten the wheel hub lock nut.
- Perform the final tightening of each of parts under unladen conditions, which were removed when removing wheel hub and bearing assembly and axle housing.
- Never reuse cotter pin.

RIGHT SIDE

RIGHT SIDE : Removal and Installation

INFOID:0000000003579542

REMOVAL

1. Remove tires with power tool.
2. Remove wheel sensor and sensor harness. Refer to BRC-114, "FRONT WHEEL SENSOR : Exploded View".
3. Remove lock plate from strut assembly. Refer to BR-22, "FRONT : Exploded View".
4. Remove caliper assembly. Hang caliper assembly not to interfere with work. Refer to BR-36, "BRAKE CALIPER ASSEMBLY : Exploded View".
   CAUTION:
   Never depress brake pedal while brake caliper is removed.
5. Remove disc rotor. Refer to BR-37, "BRAKE CALIPER ASSEMBLY : Removal and Installation".
6. Remove cotter pin, and then loosen wheel hub lock nut with power tool.
7. Patch wheel hub lock nut with a piece of wood. Hammer the wood to disengage wheel hub and bearing assembly from drive shaft.
   CAUTION:
   - **Never place drive shaft joint at an extreme angle. Also be careful not to overextend slide joint.**
   - **Never allow drive shaft to hang down without support for joint sub-assembly, housing assembly and the other parts.**

   NOTE:
   Use suitable puller, if wheel hub and bearing assembly and drive shaft cannot be separated even after performing the above procedure.
8. Remove wheel hub lock nut.
9. Remove strut assembly from steering knuckle. Refer to FSU-10, "Exploded View".
10. Remove drive shaft from wheel hub and bearing assembly.

11. Remove drive shaft from link shaft.
    - Use the drive shaft attachment (A) [SST: KV40107500 (—)] and a sliding hammer (B) while inserting tip of the drive shaft attachment between housing assembly and link shaft assembly.

      CAUTION:
      Never place drive shaft joint at an extreme angle when removing drive shaft. Also be careful not to overextend slide joint.

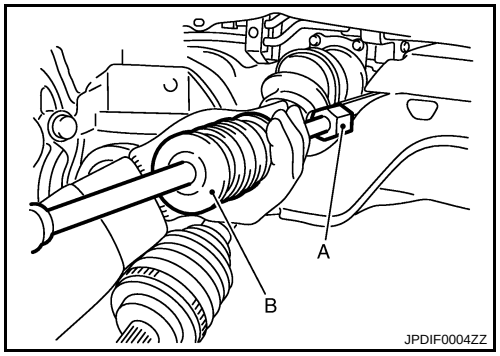

12. Remove bearing housing mounting bolts.
13. Remove link shaft assembly from support bearing bracket.
14. Remove support bearing bracket, follow the procedure described below.

a. Remove front exhaust tube. Refer to EX-5, "Exploded View".
b. Remove three way catalyst (bank 1) and heated oxygen sensor harness bracket. Refer to EM-34, "Exploded View".
c. Remove support bearing bracket.

INSTALLATION

Note the following, and install in the reverse order of removal.

- Always replace differential side oil seal with new one when installing link shaft. Refer to TM-173, "AWD : Exploded View".
- Place the protector (A) [SST: KV38107900 (—)] onto transaxle assembly to prevent damage to the oil seal while inserting lonk shaft. Slide link shaft sliding joint and tap with a hammer to install securely.

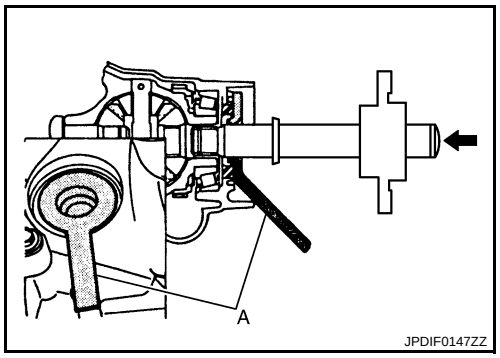

- Install support bearing bracket (1) in following procedure,
- Temporarily tighten mounting bolts (A), then tighten them to specified torque.
- Temporarily tighten mounting bolts (B), then tighten them to specified torque.

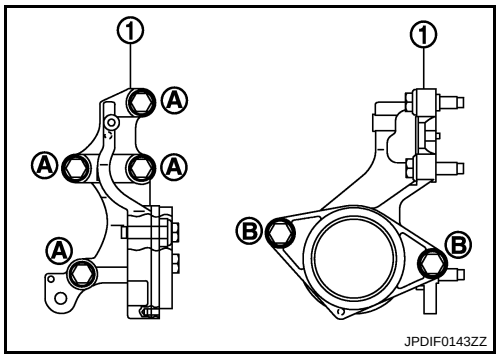

- Apply NISSAN genuine grease to drive shaft serration (link shaft side), and install drive shaft onto link shaft.

Standard : 1.5 – 2.5 g (0.053 – 0.088 oz)

- Clean the matching surface of wheel hub lock nut and wheel hub and bearing assembly.

  CAUTION:
  Never apply lubricating oil to these matching surface.
- Clean the matching surface of drive shaft and wheel hub and bearing assembly.

  CAUTION:

Apply paste [service parts (440037S000)] to cover entire flat surface (A) of joint sub-assembly of drive shaft.

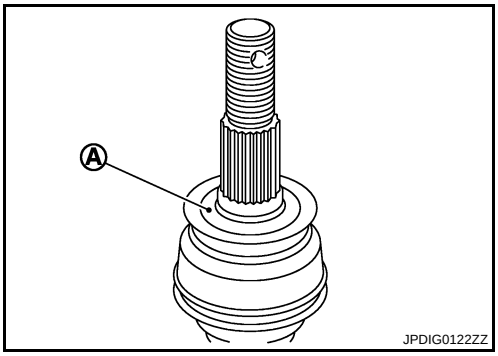

Standard

Amount paste : 0.2 – 1.0 g (0.008 – 0.035 oz)

- Never use a power tool to tighten the wheel hub lock nut.
- Perform the final tightening of each of parts under unladen conditions, which were removed when removing wheel hub and bearing assembly and axle housing.
- Never reuse cotter pin.

WHEEL SIDE

WHEEL SIDE : Disassembly and Assembly

INFOID:0000000003452089

DISASSEMBLY

1. Fix shaft with a vise.
   CAUTION:
   Protect shaft using aluminum or copper plates when fixing with a vise.
2. Remove boot bands, and then remove boot from joint sub-assembly.
3. Screw drive shaft puller (A) into joint sub-assembly screw part to a length of 30 mm (1.18 in) or more. Support drive shaft with one hand and pull out joint sub-assembly with a sliding hammer (B) from housing assembly.
   CAUTION:
   - **Align a sliding hammer and drive shaft and remove them by pulling firmly and uniformly.**
   - **If joint sub-assembly cannot be pulled out, try after removing drive shaft from vehicle.**
4. Remove circular clip (1) from housing assembly.
5. Remove boot from housing assembly.

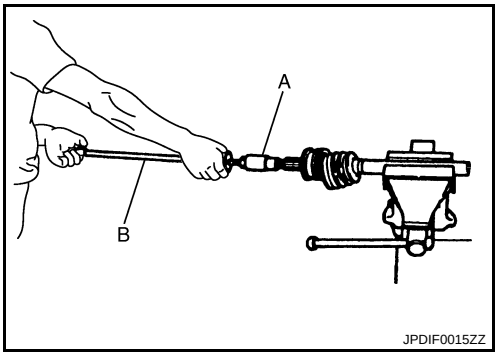

ASSEMBLY

1. Clean the old grease on joint sub-assembly with paper waste.
2. Fill serration slot joint sub-assembly with NISSAN genuine grease or equivalent until the serration slot and ball groove become full to the brim.
   CAUTION:
   After applying grease, use a paper waste to wipe off old grease that has oozed out.
3. Install boot and boot bands to housing assembly.
   CAUTION:
   - **Wrap serration on housing assembly with tape to protect the boot from damage.**
   - **Never reuse boot and boot band.**
4. Remove the tape wrapped around the serration on housing assembly.
5. Position the circular clip on groove at the housing assembly edge.
   CAUTION:
   Never reuse circular clip.
   NOTE:
   Drive joint inserter is recommended when installing circular clip.
6. Align both center axles of the housing assembly edge and joint sub-assembly. Then assemble housing assembly with circular clip joint sub-assembly.

7. Install joint sub-assembly (1) to housing assembly using plastic hammer.
CAUTION:
Confirm that joint sub-assembly is correctly engaged while rotating drive housing assembly.
8. Apply the specified amount of grease into the boot inside from large diameter side of boot.

Standard

Grease amount : Refer to FAX-54, "Drive Shaft".

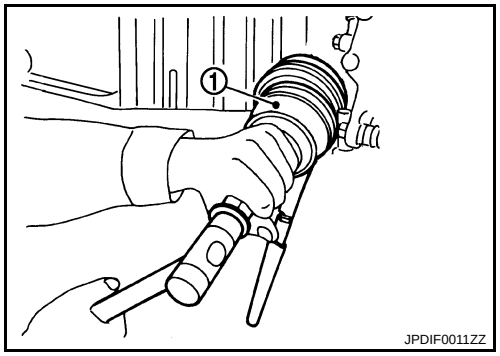

9. Install the boot securely into grooves (indicated by "*" marks) shown in the figure.
CAUTION:
If grease adheres to the boot mounting surface (indicated by "*" mark) on the housing assembly or joint sub-assembly, boot may be removed. Remove all grease from the boot mounting surface.
10. To prevent the deformation of the boot, adjust the boot installation length (L) to the specified value shown below by inserting the suitable tool into inside of the boot from the large diameter side of the boot and discharging the inside air.

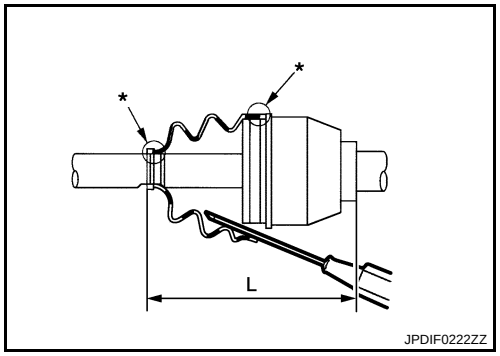

Standard

L : Refer to FAX-54, "Drive Shaft".

CAUTION:
- **If the boot installation length exceeds the standard, it may cause breakage of boot.**
- **Be careful not to touch the inside of the boot with a tip of tool.**

11. Secure the large and small ends of the boot with boot bands using the boot band crimping tool (A) [SST: KV40107300 (—)].
CAUTION:
Never reuse boot band.

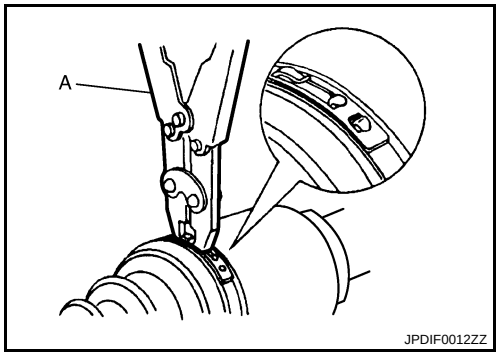

NOTE:
Secure boot band so that dimension (M) meets the specification as shown in the figure.

Standard

M : 1.0 – 4.0 mm (0.039 – 0.157 in)

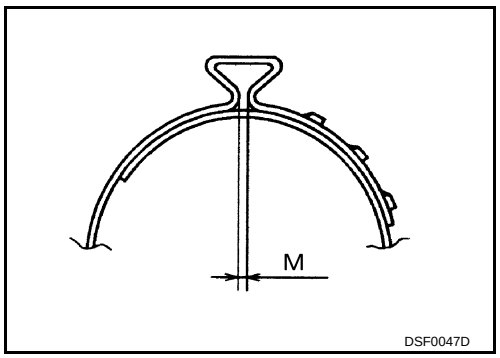

12. Secure joint sub-assembly and housing assembly, and then make sure that they are in the correct position when rotating boot. Reinstall them using boot bands when boot installation positions become incorrect.
CAUTION:
Never reuse boot band.

TRANSAXLE SIDE

TRANSAXLE SIDE : Disassembly and Assembly

INFOID:0000000003452090

DISASSEMBLY

Left Side

1. Fix drive shaft with a vise.
   CAUTION:
   Protect shaft using aluminum or copper plates when fixing with a vise.
2. Disassemble boot (wheel side). Refer to FAX-48, "WHEEL SIDE : Disassembly and Assembly".
3. Remove boot bands and boot (transaxle side).

Right Side

1. Fix drive shaft with a vise.
   CAUTION:
   Protect shaft using aluminum or copper plates when fixing with a vise.
2. Disassemble boot (wheel side). Refer to FAX-48, "WHEEL SIDE : Disassembly and Assembly".
3. Remove dynamic damper, follow the procedure described below.

a. Remove damper bands.
b. Remove dynamic damper from shaft.

4. Remove boot bands and boot (transaxle side).
5. Remove dust shield from housing assembly.
6. Remove support bearing from link shaft, follow the procedure described below.

a. Press out bearing housing and support bearing from link shaft.
b. Remove dust shield from bearing housing.
c. Remove snap ring (1).
d. Remove oil seal.

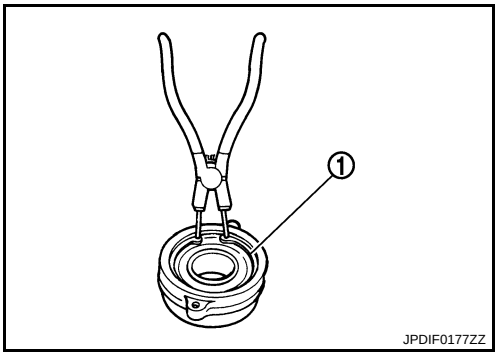

e. Press out support bearing from bearing housing (1) with drift (A) [SST: ST35271000 (—)]

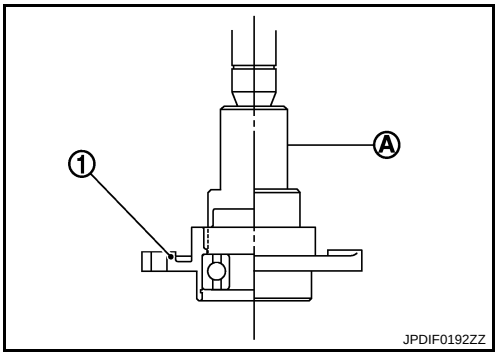

ASSEMBLY

Left Side

1. Install dust shield.
   CAUTION:
   Never reuse dust shield.
2. Install circular clip.
   CAUTION:
   Never reuse circular clip.

3. Clean old grease on housing assembly with paper waste.
4. Install boot securely into grooves (indicated by “*” marks) shown in the figure.
   CAUTION:
   If grease adheres to the boot mounting surface (indicated by “*” mark) on housing assembly, boot may be removed. Remove all grease from the boot mounting surface.
5. To prevent the deformation of the boot, adjust the boot installation length (L) to the specified value shown below by inserting the suitable tool into the inside of boot from the large diameter side of boot and discharging inside air.

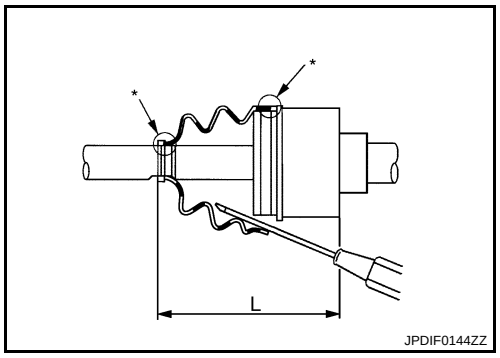

Standard

L **: Refer to FAX-54, "Drive Shaft".**

CAUTION:
- **If the boot installation length exceeds the standard, it may cause breakage of boot.**
- **Be careful not to touch the inside of the boot with the tip of tool.**

6. Install boot bands securely as shown in the figure.

a. Put boot band in the groove on drive shaft boot. Then fit pawls (⬅) into holes to temporary installation.
   NOTE:
   For the large diameter side, fit projection (A) and guide slit (B) at first.

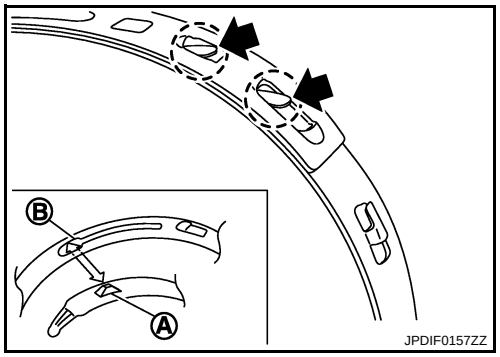

b. Pinch projection on the band with suitable pliers to tighten band.
c. Insert tip of band below end of the pawl.
7. Secure housing assembly, and then make sure that they are in the correct position when rotating boot. Reinstall them with boot bands when the mounting positions become incorrect.

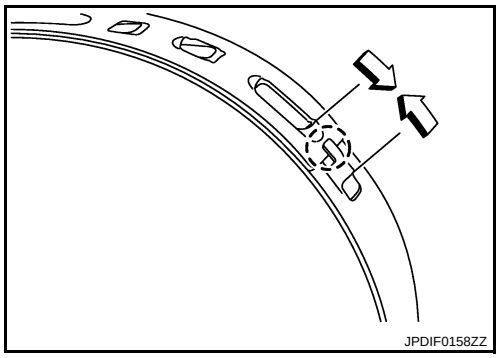

Right Side

1. Install support bearing from link shaft, follow the procedure described below.

a. Press support bearing to bearing housing (1) with drift (A) [SST: ST35271000 (—)]

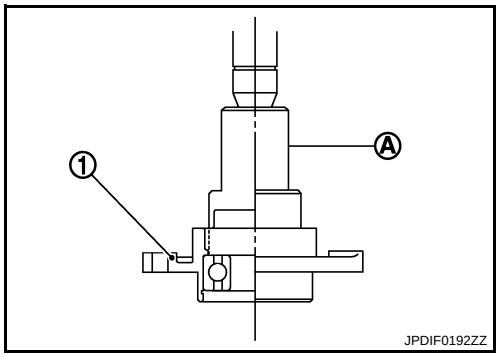

b. Install snap ring (1).
CAUTION:
Never reuse snap ring.

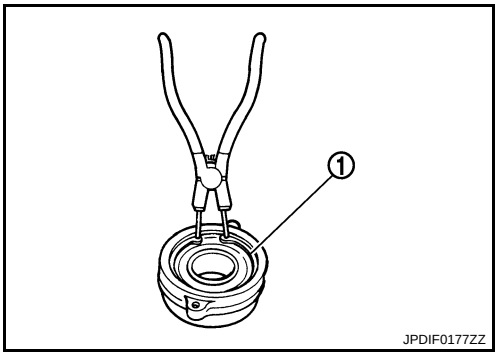

c. Install dust shield to baring housing.
CAUTION:
Never reuse dust shield.

d. Install oil seal to bearing housing with drift.
CAUTION:
- **Never reuse oil seal.**
- **Apply multi - purpose grease to oil seal lip.**

e. Press bearing housing assembly to link shaft.

f. Install circular clip to link shaft.
CAUTION:
Never reuse circular clip.

2. Clean old grease on housing assembly with paper waste.

3. Install boot securely into grooves (indicated by "*" marks) shown in the figure.
CAUTION:
If grease adheres to the boot mounting surface (indicated by "*" mark) on housing assembly, boot may be removed. Remove all grease from the boot mounting surface.

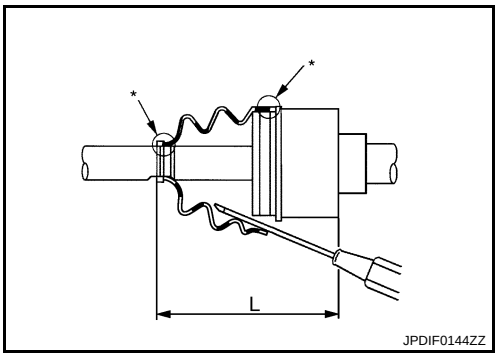

4. To prevent the deformation of the boot, adjust the boot installation length (L) to the specified value shown below by inserting the suitable tool into the inside of boot from the large diameter side of boot and discharging inside air.

Standard

L **: Refer to FAX-53, "Inspection".**

CAUTION:
- **If the boot installation length exceeds the standard, it may cause breakage of boot.**
- **Be careful not to touch the inside of the boot with the tip of tool.**

5. Install boot bands securely as shown in the figure.

a. Put boot band in the groove on drive shaft boot. Then fit pawls (⬅) into holes to temporary installation.
NOTE:
For the large diameter side, fit projection (A) and guide slit (B) at first.

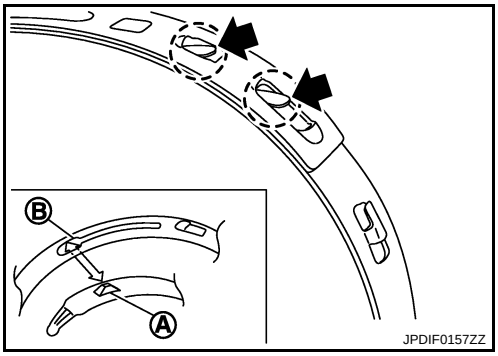

b. Pinch projection on the band with suitable pliers to tighten band.

c. Insert tip of band below end of the pawl.

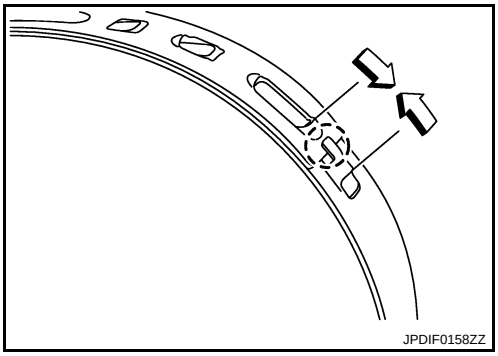

6. Secure housing assembly, and then make sure that they are in the correct position when rotating boot. Reinstall them with boot bands when the mounting positions become incorrect.

7. Assemble boot (wheel side) and joint sub-assembly. Refer to FAX-21, "WHEEL SIDE : Disassembly and Assembly".

8. Install dynamic damper, follow the procedure described below.

a. Install dynamic damper to shaft.

b. Secure dynamic damper with bands in the following specified position (A) when installing.
CAUTION:
Never reuse bands.

Standard

A : Refer to FAX-54, "Drive Shaft".

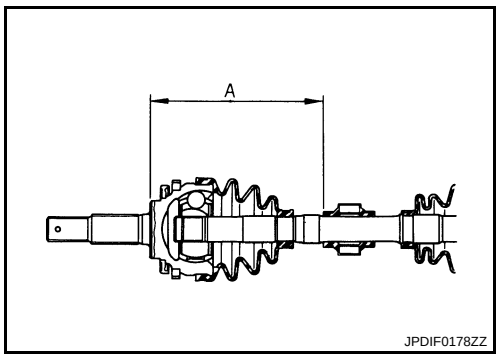

Inspection

INFOID:0000000003372912

INSPECTION AFTER REMOVAL

- Move joint up/down, left/right, and in the axial directions. Check for motion that is not smooth and for significant looseness.
- Check boot for cracks, damage, and leakage of grease.
- Disassemble drive shaft and exchange malfunctioning part if there is a non-standard condition.

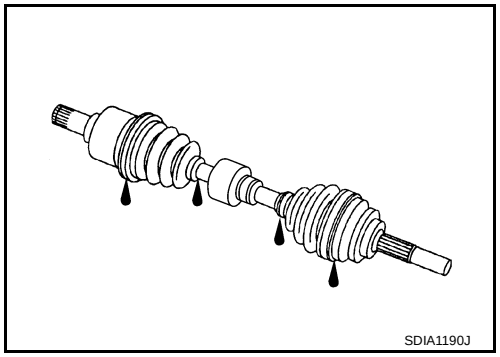

INSPECTION AFTER DISASSEMBLY

Shaft
Check shaft for runout, cracks, or other damage. Replace if necessary.

Dynamic Damper
Check damper for cracks or wear. Replace if necessary.

Joint Sub-Assembly (Wheel Side)
Check the following:
- Joint sub-assembly for rough rotation and excessive axial looseness.
- The inside of the joint sub-assembly for entry of foreign material.
- Joint sub-assembly for compression scars, cracks, and fractures inside of joint sub-assembly.

Replace joint sub-assembly if there are any non-standard conditions of components.

Housing Assembly (Transaxle Side)
Replace housing assembly if there is scratching or wear of housing assembly roller contact surface.

Link Shaft (Right side)
Check shaft for runout, cracks, or other damage. Replace if necessary.

Support Bearing (Right Side)
Make sure wheel bearing rolls freely and is free from noise, cracks, pitting or wear. Replace support bearing if there are any non-standard conditions.

Support Bearing Bracket (Right Side)
Check for bending, cracks, or damage. Replace support bearing bracket if there are any non-standard conditions.

SERVICE DATA AND SPECIFICATIONS (SDS)

SERVICE DATA AND SPECIFICATIONS (SDS)

Wheel Bearing

INFOID:0000000003372913

Item	Standard
Axial end play	0.05 mm (0.002 in) or less

Drive Shaft

INFOID:0000000003372914

Item		Left side	Right side
Grease quantity	Wheel side	170 – 190 g (6.00 – 6.70 oz)	
	Transaxle side	155 – 175 g (5.47 – 6.17 oz)	
Boots installed length	Wheel side	158.6 mm (6.24 in)	
	Transaxle side	163.67 mm (6.44 in)	159.47 mm (6.28 in)
Dimension of dynamic damper		—	202 – 208 mm (7.95 – 8.19 in)