SECTION SE

SEAT

CONTENTS

BASIC INSPECTION

DIAGNOSIS AND REPAIR WORK FLOW

Work Flow

INFOID:0000000003397009

DETAILED FLOW

1. OBTAIN INFORMATION ABOUT SYMPTOM

Interview the customer to obtain the malfunction information (conditions and environment when the malfunction occurred) as much as possible when the customer brings the vehicle in.

>> GO TO 2.

2. REPRODUCE THE MALFUNCTION INFORMATION

Check the malfunction on the vehicle that the customer describes.
Inspect the relation of the symptoms and the condition when the symptoms occur.

>> GO TO 3.

3. IDENTIFY THE MALFUNCTIONING SYSTEM WITH “SYMPTOM DIAGNOSIS”

Use “Symptom diagnosis” from the symptom inspection result in step 2 and then identify where to start performing the diagnosis based on possible causes and symptoms.

>> GO TO 4.

4. IDENTIFY THE MALFUNCTIONING PARTS WITH “COMPONENT DIAGNOSIS”

Perform the diagnosis with “Component diagnosis” of the applicable system.

>> GO TO 5.

5. REPAIR OR REPLACE THE MALFUNCTIONING PARTS

Repair or replace the specified malfunctioning parts.

>> GO TO 6.

6. FINAL CHECK

Check that malfunctions are not reproduced when obtaining the malfunction information from the customer, referring to the symptom inspection result in step 2.

Are the malfunctions corrected?

YES >> INSPECTION END
NO >> GO TO 3.

FUNCTION DIAGNOSIS

POWER SEAT

System Description

INFOID:0000000003397010

BCM can operate regardless of the ignition switch position, because battery power is supplied at all times to power seat switch.

SLIDING OPERATION

While operating the sliding switch located in power seat switch, sliding motor operates and makes possible the seat front and back position adjustment.

RECLINING OPERATION

While operating the reclining switch located in power seat switch, reclining motor operates and makes possible the seat back forward and backward position adjustment.

LIFTING OPERATION

While operating the lifting switch located in power seat switch, lifting motor operates and makes possible the seat cushion up and down position adjustment.

Component Parts Location

INFOID:0000000003397011

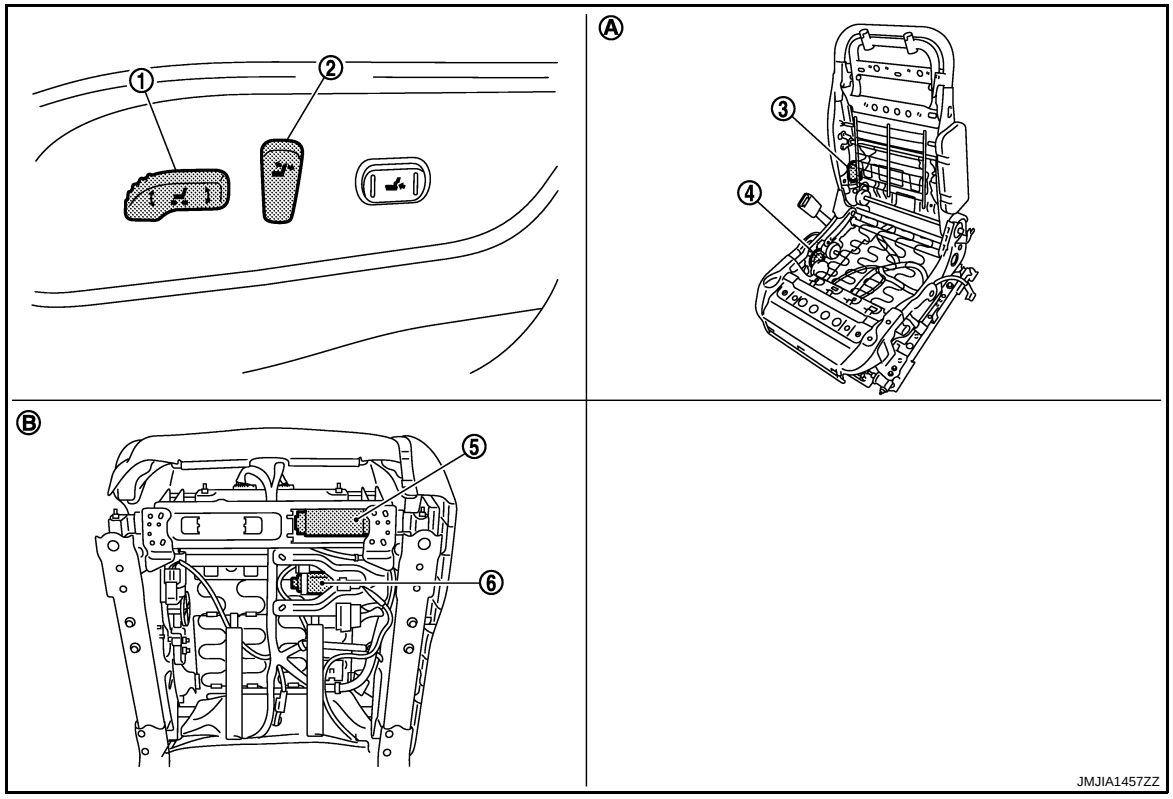

1.	Sliding switch and lifting switch (driver side) B414	2.	Reclining switch (driver side) B414	3.	Reclining motor (driver side) B415
4.	Lifting motor (rear) (driver side) B418	5.	Sliding motor (driver side) B416	6.	Lifting motor (front) (driver side) B417
A.	View with seat cushion pad and seat back pad are removed.	B.	Back side of seat cushion		

Component Description

INFOID:0000000003397012

Item	Function
BCM	Supplies at all times the power received from battery to power seat switch
Power seat switch	Built-in reclining switch, sliding switch and lifting switch, controls the power supplied to each motor
Reclining motor	With the power supplied from power seat switch, operates the forward and backward movement of seatback
Sliding motor	With the power supplied from power seat switch, operates the forward and backward slide of seat
Lifting motor (front/rear)	With the power supplied from power seat switch, operates the up and down movement of seat cushion

HEATED SEAT

System Description

INFOID:0000000003397013

Heated seat is a system that operates when ignition switch is in ON position.

HEATER OPERATION

- While operating the heated seat switch, seat cushion heater and seat back heater operate.
- Temperature of seat can be adjusted by operating on heated seat switch.

Component Parts Location

INFOID:0000000003397014

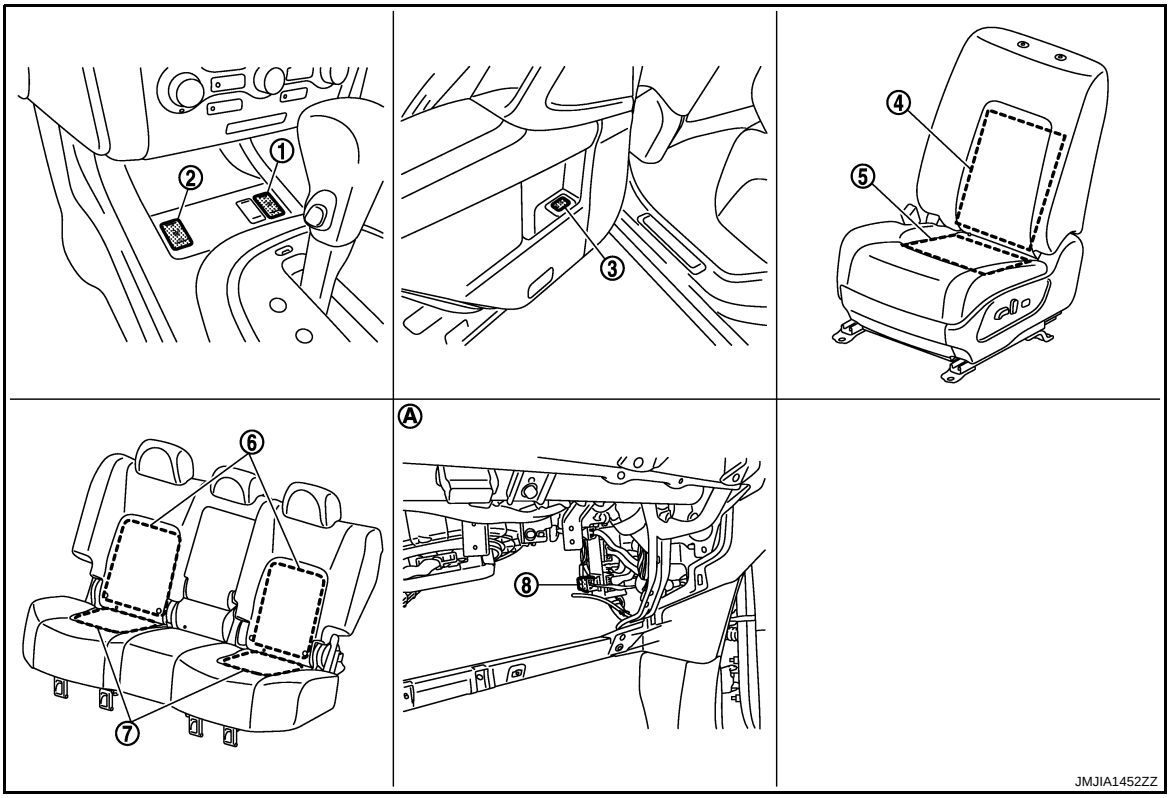

1. Front heated seat switch (passenger side) M203
2. Front heated seat switch (driver side) M202
3. Rear heated seat switch
   - LH: D70
   - RH: D72
4. Seat back heater (front seat)
   - Driver side B413
   - Passenger side B433
5. Seat cushion heater (front seat)
   - Driver side B412
   - Passenger side B432
6. Seat back heater (rear seat)
7. Seat cushion heater (rear seat)
8. Heated seat relay (rear seat) M58

A. View with glove box assembly removed

Component Description

INFOID:0000000003397015

Item	Function
Heated seat switch	• Power is supplied to each heater • Depending on LOW/HIGH position of switch, operating heater number is changeable
Seat cushion heater	Built-in seat cushion, the heater operates with the power supplied from heater seat switch
Seat back heater	Built-in seatback, the heater operates with the power supplied from heater seat switch

LUMBAR SUPPORT

System Description

INFOID:0000000003396840

- Lumbar support can operate regardless of the ignition switch position because battery power is supplied to it at all times.
- While operating the lumbar support switch, lumbar support motor operates which allows forward and backward operation of seatback support.

Component Parts Location

INFOID:0000000003396841

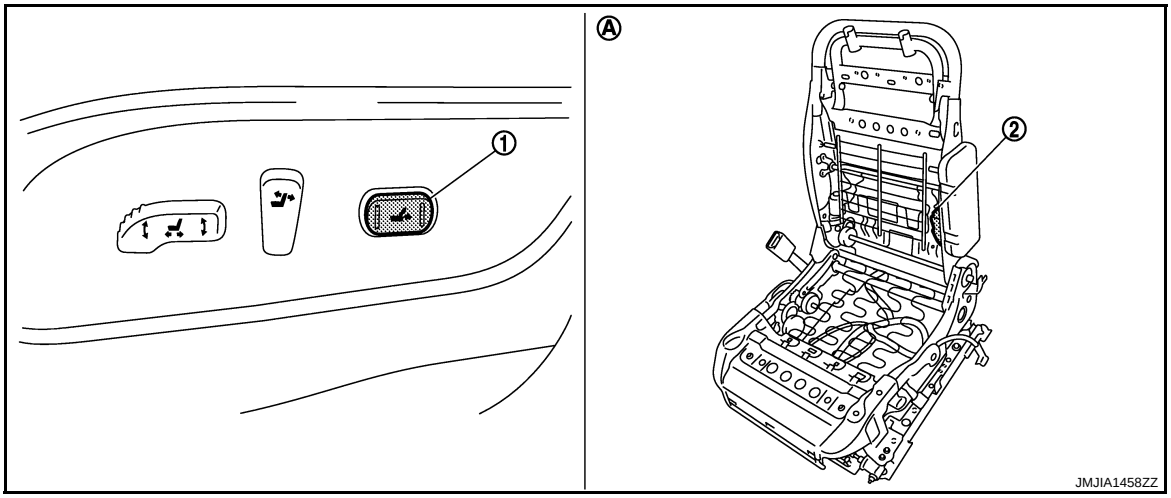

1. Lumbar support switch
   B457 (With automatic drive positioner)
   B407(Without automatic drive positioner)
2. Lumbar support motor
   B458 (With automatic drive positioner)
   B408(Without automatic drive positioner)

A. View with seat back pad is removed

Component Description

INFOID:0000000003396842

Item	Function
Lumbar support switch	Controls the power supplied to lumbar support motor
Lumbar support motor	With the power supplied from lumbar support switch, operates the forward and backward movement of seatback support device

TILT&TELESCOPIC SYSTEM

System Diagram

INFOID:0000000003566084

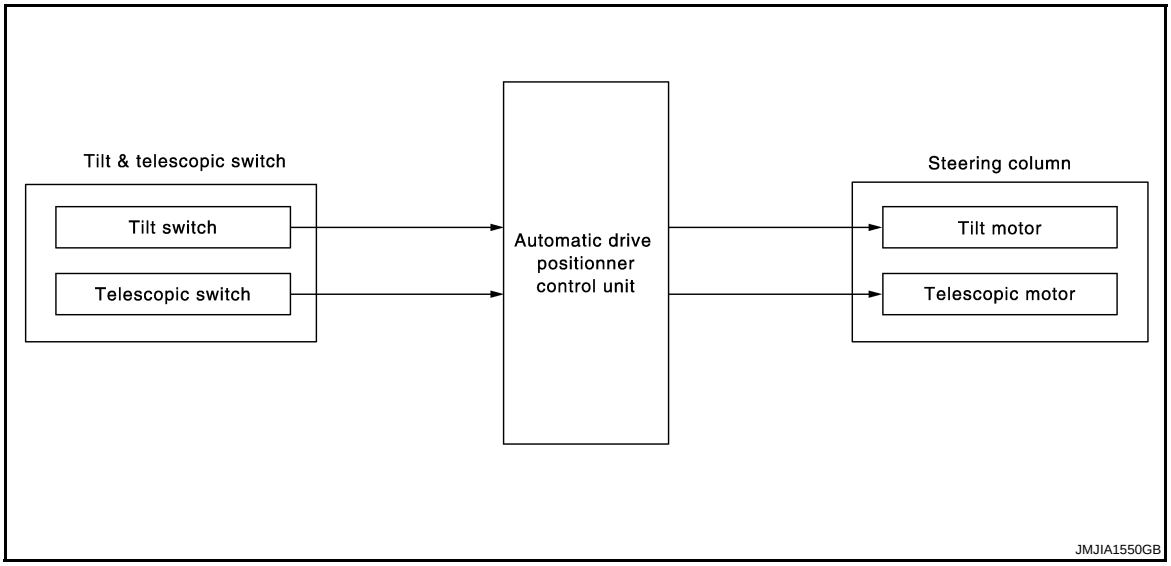

System Description

INFOID:0000000003566085

Power from battery is supplied at all times to automatic driver positioner control unit, tilt & telescopic system can operate regardless of the ignition switch position.

TILT OPERATION

- While operating the tilt & telescopic switch, tilt motor operates, and allows up or down position adjustment of steering wheel.

TELESCOPIC OPERATION

- Operating the tilt & telescopic switch, telescopic motor operates and allows forward and backward position regulation of steering wheel.

Component Parts Location

INFOID:0000000003566086

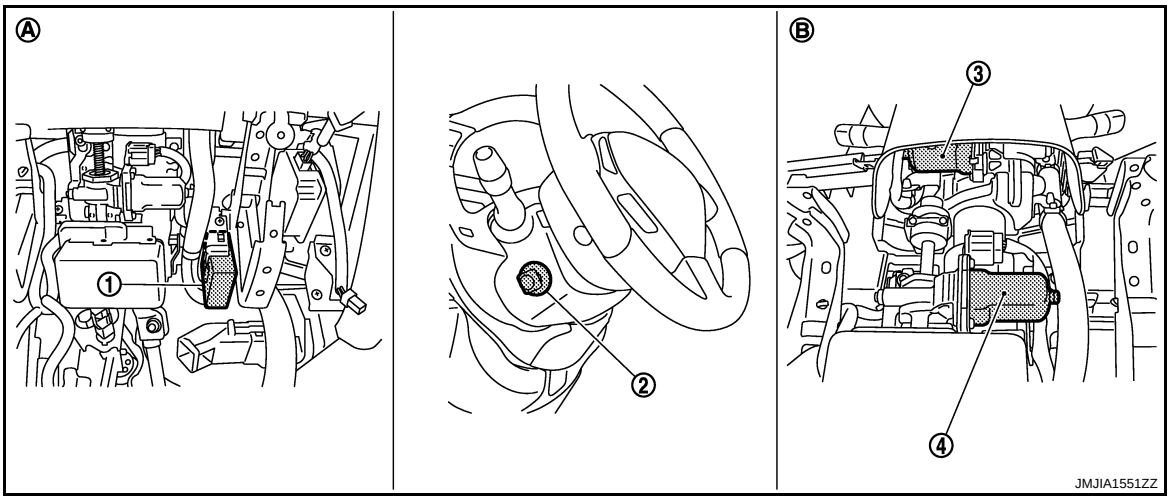

1. Automatic drive positioner control unit M75, M104
2. Tilt & telescopic switch M102
3. Tilt motor M116
4. Telescopic motor M117

A. View with instrument lower panel (LH) is removed.
B. View with steering column cover is removed.

Component Description

INFOID:0000000003566087

Item	Function
Automatic drive positioner control unit	Detects data input signal of tilt & telescopic switch, performs tilt & telescopic motor control
Tilt & telescopic switch	Tilt switch and telescopic switch, as a unit, transmit switch operation signal to automatic drive positioner control unit
Tilt & telescopic motor	Operates with the power received from automatic drive positioner control unit

REAR SEATBACK POWER RETURN SYSTEM

System Diagram

INFOID:0000000003432508

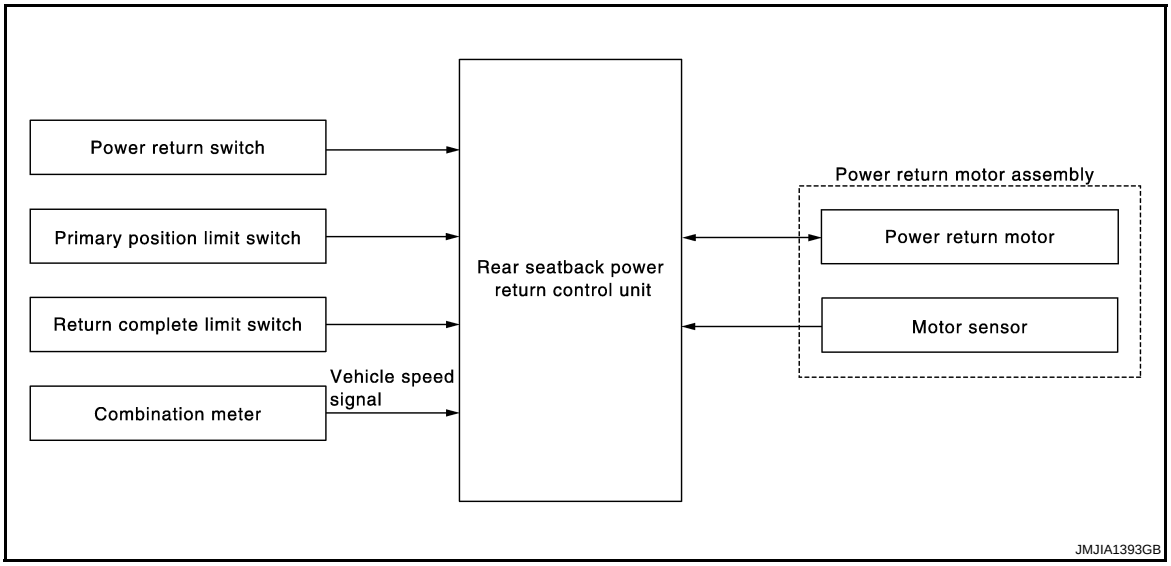

System Description

INFOID:0000000003418721

DESCRIPTION

- The rear seat back power return system is the system that enables the return operation of the left and right rear seatbacks independently by pressing and holding the power return switch on the instrument panel or in the luggage room.
- As for the safety mechanism, the reverse operation is performed if the power return switch is released during the return operation. The anti-pitch function is installed so that the automatic reverse operation is performed if the pinching of foreign materials between the left and right rear seatbacks is detected.

OPERATION DESCRIPTION

The rear seatback power return system consists of the sector gear that transmits the movement information of rear seatback power return control unit, power return switch, power return motor, motor sensor, primary position limit switch, return complete limit switch and power return motor.

Return Operation Starting Condition

The rear seat back return operation starts when all of the following conditions are satisfied.

- Vehicle speed 2 km/h (1 MPH) or less
- Return complete limit switch: ON
- The battery voltage is normal

Operation sequence	Rear seatback condition	Sector gear condition	Primary position limit switch	Return complete limit switch
1	Return completion position	Initial position	OFF	OFF
2	Fold-down position	Initial position	OFF	ON
3	Active	Return non-completion position	OFF → ON	ON
4	Return completion position	Return completion position	ON	OFF
5		Initial position	OFF	OFF

- In the condition that the rear seatback is raised (return completion position), the sector gear is in the initial position and the primary position limit switch and return complete limit switch are OFF.
- When manually operating the rear seatback to the fold-down position, the return complete limit switch turns ON, and the rear seatback power return control unit judges that the rear seatback is tilted (return non-completion position).

- When pressing the power return switch on the instrument panel or in the luggage room, the rear seatback power return control unit detects the power return ON signal and supplies the power to the power return motor. Then, the rear seatback power return control unit sounds the operation start buzzer.
- With the power supplied from the rear seat back power control unit, the power return motor rotates in the return direction. The rear seatback starts the return operation via the sector gear.
- When the sector gear starts rotating in the return direction, the primary position limit switch turns ON. The rear seatback power return control unit judges that the sector gear is in any position other than the initial position.
- When the rear seatback moves to the return position, the return complete limit switch turns OFF. The rear seatback power return control unit activates the return completion buzzer and stops the power return motor. Then, the rear seatback power return control unit reverses the power return motor after 0.2 seconds so that the sector gear returns to the initial position.
- When the sector gear returns to the initial position by reverse rotation of the power return motor, the primary position limit switch turns OFF. The rear seatback power return control unit stops the reverse operation of the power return motor. The return operation is completed.
- When releasing the power return switch during the return operation (both the primary position limit switch and return complete limit switch are ON), the rear seatback power return control unit detects the power switch OFF signal and returns the rear seatback to the fold-down position by the reverse rotation of the power return motor. When pushing the switch again during the reverse operation, the return operation restarts.

NOTE:
Disconnect the battery with the sector gear in any position other than the initial position (primary position limit switch: ON). The sector gear is returned to the initial position when the battery is connected again.

ANTI-PINCH OPERATION

When the pinch between RH/LH rear seatbacks is detected during the return operation, the malfunction detecting buzzer sounds and the rear seatback returns to the fold-down position.

- If there is a pinching of foreign materials between the left and right rear seatbacks during the return operation (both the primary position limit switch and return complete switch are ON), the voltage pulse of motor sensor changes.
- When inputting the pinching signal from the motor sensor, the rear seatback power return control unit sounds the malfunction detecting buzzer and stops the power return motor. Then, the rear seatback power return control unit reverses the power return motor after 0.2 second so that the rear seatback returns to the fold-down position.

SECTOR GEAR REVERSE STARTING CONDITION

If any of the following conditions are satisfied, the sector gear may be reversed.

- Rear seatback return is completed (return complete limit switch: OFF)
- Release the power return switch before completing the return
- Pinch detection
- Lock detection of power return motor
  (Lock at normal rotation)
- The rear seatback return is not completed within 60 seconds
- Detect the battery voltage malfunction during the return operation
- Return to the normal condition after detecting the battery voltage malfunction during the return operation
- The primary position limit switch does not turn OFF → ON within the specified motor pulse number from starting the return operation.

SECTOR GEAR REVERSE STOP CONDITION

If any of the following conditions are satisfied, the reverse operation stops.

- Sector gear initial position (primary position limit switch: OFF)
- Lock detection of power return motor (Lock during reverse operation)
- The sector gear initial position is not completed within 60 seconds

NOTE:
The battery voltage indicates the voltage between battery voltage (system) terminal 17 and GND (system) terminal 32 of rear seatback power return control unit. It is normal when the voltage is 7.5 ± 10% or more. If it is less than the specified value, there is a malfunction.

POWER CONSUMPTION CONTROL SYSTEM

Rear seatback power return control unit incorporates a power consumption control function that reduces the power consumption according to the vehicle status.

Low Power Consumption Mode

If all of the following conditions are satisfied for 30 seconds period of time, the system shifts to the low power consumption mode.

- Power return switch is OFF
- Power return motor does not operate
- Vehicle speed 2 km/h (1 MPH) or less

If any of the following conditions are satisfied, the low power consumption mode is released.

- When the power return switch is pressed
- When the change occurs to the pulse of vehicle speed sensor

There are the following functions as the low power consumption mode.

- Turn the power supply of limit switch to OFF
- Turn the power supply of the motor sensor to OFF when the power return motor is not operated

INPUT/OUTPUT SIGNAL CHART

Item	Input signal to rear seatback power return control unit	Rear seatback power return function	Actuator
Power return switch	Power return switch signal	Rear seatback power return control	Power return motor
Primary position limit switch	Primary position limit switch signal		
Return complete limit switch	Return complete limit switch signal		
Motor sensor	Motor sensor signal		
Combination meter	Vehicle speed signal		

BUZZER OPERATION PATTERN AND ORDER OF PRIORITY

Operation type	Sound pattern	Priority
Malfunction	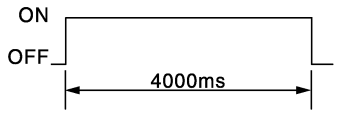 JMJIA1396ZZ	1
Return operation completed	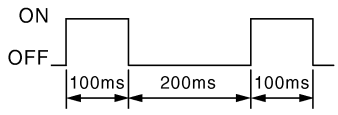 JMJIA1395ZZ	2
Start return operation	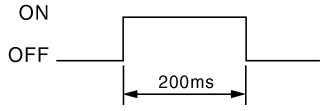 JMJIA1394ZZ	3

Component Parts Location

INFOID:0000000003418722

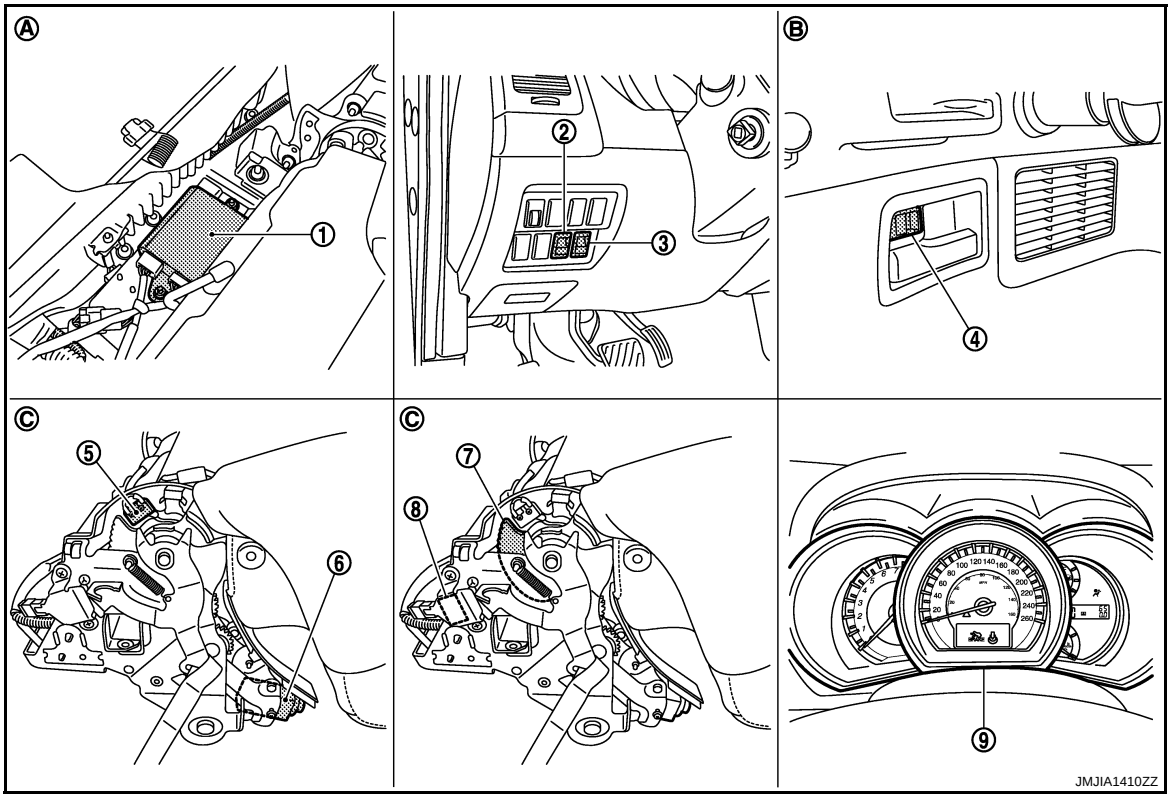

1.	Rear seatback power return control unit B492, B493	2.	Front power return switch (LH) M114	3.	Front power return switch (RH) M113
4.	Rear power return switch (LH) B106	5.	Primary position limit switch (RH) B495	6.	Power return motor assembly (RH) B494
7.	Sector gear (RH)	8.	Return complete limit switch (RH) B496	9.	Combination meter M34
A.	Back of rear seat (RH)	B.	Luggage side (LH)	C.	In seat device

Component Description

INFOID:0000000003418723

Item	Function
Rear seatback power return control unit	Control the rear seatback power return system
Power return motor	Operate the rear seatback
Motor sensor	Detect the operation of power return motor
Power return switch	Switch that performs the return operation
Primary position limit switch	Detect the initial position of sector gear
Return complete limit switch	Detect the return position of rear seatback
Combination meter	Transmit the vehicle speed signal
Sector gear	Transmit the operation of power return motor to rear seatback

COMPONENT DIAGNOSIS

POWER SUPPLY AND GROUND CIRCUIT

REAR SEATBACK POWER RETURN CONTROL UNIT

REAR SEATBACK POWER RETURN CONTROL UNIT : Diagnosis Procedure

INFOID:0000000004758041

1.CHECK FUSE

Check that the following fuses are not fusing.

Terminal No.	Signal name	Fuse No.
16	Battery power supply	32 (30A)
17		6 (10A)

Is the fuse fusing?

YES >> Replace the blown fuse after repairing the affected circuit if a fuse is blown.
NO >> GO TO 2.

2.CHECK POWER SUPPLY CIRCUIT

1. Turn ignition switch OFF.
2. Disconnect rear seatback power return control unit connector.
3. Check voltage between rear seatback power return control unit harness connector and ground.

(+)		(–)	Voltage (Approx.)
Rear seatback power return control unit			
Connector	Terminal		
B492	16	Ground	Battery voltage
B493	17		

Is the measurement value normal?

YES >> GO TO 3.
NO >> Repair harness or connector.

3.CHECK GROUND CIRCUIT

Check continuity between rear seatback power return control unit harness connector and ground.

Rear seatback power return control unit		Ground	Continuity
Connector	Terminal		
B492	13		Existed
B493	32		

Does continuity exist?

YES >> INSPECTION END
NO >> Repair harness or connector.

AUTOMATIC DRIVE POSITIONER CONTROL UNIT

AUTOMATIC DRIVE POSITIONER CONTROL UNIT : Diagnosis Procedure

INFOID:0000000004758042

1.CHECK FUSIBLE LINK

Check that the following fuse and fusible link are not fusing.

Terminal No.	Signal name	Fusible link No.
25	Battery power supply	L (40A)

Is the fuse fusing?

YES >> Replace the blown fusible link after repairing the affected circuit if a fusible link is blown.
NO >> GO TO 2.

2. CHECK POWER SUPPLY CIRCUIT

1. Turn ignition switch OFF.
2. Check voltage between automatic drive positioner control unit harness connector and ground.

(+)		(–)	Voltage (V) (Approx.)
Automatic drive positioner control unit			
Connector	Terminals		
M104	25	Ground	Battery voltage

Is the inspection result normal?

YES >> GO TO 3.
NO >> Check the following.
- Repair or replace harness between fusible link and automatic drive positioner control unit.
- Circuit breaker.

3. CHECK GROUND CIRCUIT

Check continuity between the automatic drive positioner control unit harness connector and ground.

Automatic drive positioner control unit		Ground	Continuity
Connector	Terminal		
M104	30		Existed

Is the inspection result normal?

YES >> INSPECTION END
NO >> Repair harness or connector.

FRONT POWER RETURN SWITCH

LH

LH : Description

INFOID:0000000004758043

Switch that performs the return operation.

LH : Component Function Check

INFOID:0000000004758044

1. CHECK FUNCTION

Check that the rear seatback (LH) rises when pressing and holding the front power return switch (LH).

Is the inspection result normal?

YES >> Front power return switch (LH) is OK.
NO >> Refer to SE-17, "LH : Diagnosis Procedure".

LH : Diagnosis Procedure

INFOID:0000000004758045

1. CHECK REAR SEATBACK POWER RETURN CONTROL UNIT INPUT SIGNAL

1. Turn ignition switch OFF.
2. Disconnect front power return switch (LH) connector.
3. Check voltage between front power return switch (LH) harness connector and ground.

(+)		(–)	Voltage (V) (Approx.)
Front power return switch (LH)			
Connector	Terminal		
M114	1	Ground	5

Is the inspection result normal?

YES >> GO TO 3.
NO >> GO TO 2.

2. CHECK FRONT POWER RETURN SWITCH (LH) CIRCUIT

1. Disconnect rear seatback power return control unit connector.
2. Check continuity between rear seatback power return control unit harness connector and front power return switch (LH) harness connector.

Rear seatback power return control unit		Front power return switch (LH)		Continuity
Connector	Terminal	Connector	Terminal	
B493	28	M114	1	Existed

3. Check continuity between rear seatback power return control unit harness connector and ground.

Rear seatback power return control unit		Ground	Continuity
Connector	Terminal		
M493	28		Not existed

Is the inspection result normal?

YES >> Replace rear seatback return control unit. Refer to SE-127, "Removal and Installation".
NO >> Repair or replace harness.

3. CHECK FRONT POWER RETURN SWITCH (LH) GROUND CIRCUIT

Check continuity front power return switch (LH) harness connector and ground.

Front power return switch (LH)		Ground	Continuity
Connector	Terminal		
M114	2		Existed

Is the inspection result normal?

YES >> GO TO 4.
NO >> Repair or replace harness.

4. CHECK FRONT POWER RETURN SWITCH (LH)

Check front power return switch (LH).
Refer to SE-18, "LH : Component Inspection".

Is the inspection result normal?

YES >> GO TO 5.
NO >> Replace front power return switch (LH). Refer to SE-132, "Removal and Installation".

5. CHECK INTERMITTENT INCIDENT

Refer to GI-40, "Intermittent Incident".

>> INSPECTION END

LH : Component Inspection

INFOID:0000000004758046

1. CHECK FRONT POWER RETURN SWITCH (LH)

1. Turn ignition OFF.
2. Disconnect front power return switch (LH) connector.
3. Check front power return switch (LH) terminals.

Front power return switch (LH) connector	Terminal		Condition	Continuity
M114	1	2	Front power return switch (LH) is pressed	Existed
			Front power return switch (LH) is released	Not existed

Is the inspection result normal?

YES >> Front power return switch (LH) is OK.
NO >> Replace front power return switch (LH). Refer to SE-132, "Removal and Installation".

RH

RH : Description

INFOID:0000000004758047

Switch that performs the return operation.

RH : Component Function Check

INFOID:0000000004758048

1. CHECK FUNCTION

Check that the rear seatback (RH) rises when pressing and holding the front power return switch (RH).

Is the inspection result normal?

YES >> Front power return switch (RH) is OK.
NO >> Refer to SE-18, "RH : Diagnosis Procedure".

RH : Diagnosis Procedure

INFOID:0000000004758049

1. CHECK REAR SEATBACK POWER RETURN CONTROL UNIT OUTPUT SIGNAL

1. Turn ignition switch OFF.
2. Disconnect front power return switch (RH) connector.
3. Check voltage between front power return switch (RH) harness connector and ground.

(+)		(–)	Voltage (V) (Approx.)
Front power return switch (RH)			
Connector	Terminal		
M113	1	Ground	5

Is the inspection result normal?

YES >> GO TO 3.
NO >> GO TO 2.

2. CHECK FRONT POWER RETURN SWITCH (RH) CIRCUIT

1. Disconnect rear seatback power return control unit connector.
2. Check continuity between rear seatback power return control unit harness connector and front power return switch (RH) harness connector.

Rear seatback power return control unit		Front power return switch (RH)		Continuity
Connector	Terminal	Connector	Terminal	
B493	20	M113	1	Existed

3. Check continuity between rear seatback power return control unit harness connector and ground.

Rear seatback power return control unit		Ground	Continuity
Connector	Terminal		
B493	20		Not existed

Is the inspection result normal?

YES >> Replace rear seatback power return control unit. Refer to SE-127, "Removal and Installation".
NO >> Repair or replace harness.

3. CHECK FRONT POWER RETURN SWITCH (RH) GROUND CIRCUIT

Check continuity front power return switch (RH) harness connector and ground.

Front power return switch (RH)		Ground	Continuity
Connector	Terminal		
M113	2		Existed

Is the inspection result normal?

YES >> GO TO 4.
NO >> Repair or replace harness.

4. CHECK FRONT POWER RETURN SWITCH (RH)

Check front power return switch (RH).
Refer toSE-19, "RH : Component Inspection".

Is the inspection result normal?

YES >> GO TO 5.
NO >> Replace front power return switch (RH). Refer to SE-132, "Removal and Installation".

5. CHECK INTERMITTENT INCIDENT

Refer to GI-40, "Intermittent Incident".

>> INSPECTION END

RH : Component Inspection

INFOID:0000000004758050

1. CHECK FRONT POWER RETURN SWITCH (RH)

1. Turn ignition OFF.
2. Disconnect front power return switch (RH) connector.
3. Check front power return switch (RH) terminals.

Front power return switch (RH) connector	Terminal		Condition	Continuity
M113	1	2	Front power return switch (RH) is pressed	Existed
			Front power return switch (RH) is released	Not existed

Is the inspection result normal?

YES >> Front power return switch (RH) is OK.

NO >> Replace front power return switch (RH). Refer to SE-132, "Removal and Installation".

REAR POWER RETURN SWITCH

LH

LH : Description

INFOID:0000000004758051

Switch that performs the return operation.

LH : Component Function Check

INFOID:0000000004758052

1. CHECK FUNCTION

Check that the rear seatback (LH) rises when pressing and holding the rear power return switch (LH).

Is the inspection result normal?

YES >> Rear power return switch (LH) is OK.
NO >> Refer to SE-21, "LH : Diagnosis Procedure".

LH : Diagnosis Procedure

INFOID:0000000004758053

1. CHECK REAR SEATBACK POWER RETURN CONTROL UNIT OUTPUT SIGNAL

1. Turn ignition switch OFF.
2. Disconnect rear power return switch (LH) connector.
3. Check voltage between rear power return switch (LH) harness connector and ground.

(+)		(–)	Voltage (V) (Approx.)
Rear power return switch (LH)			
Connector	Terminal		
B106	1	Ground	5

Is the inspection result normal?

YES >> GO TO 3.
NO >> GO TO 2.

2. CHECK REAR POWER RETURN SWITCH (LH) CIRCUIT

1. Disconnect rear seatback power return control unit connector.
2. Check continuity between rear seatback power return control unit harness connector and rear power return switch (LH) harness connector.

Rear seatback power return control unit		Rear power return switch (LH)		Continuity
Connector	Terminal	Connector	Terminal	
B493	28	B106	1	Existed

3. Check continuity between rear seatback power return control unit harness connector and ground.

Rear seatback power return control unit		Ground	Continuity
Connector	Terminal		
B493	28		Not existed

Is the inspection result normal?

YES >> Replace rear power return control unit. Refer to SE-127, "Removal and Installation".
NO >> Repair or replace harness.

3. CHECK REAR POWER RETURN SWITCH (LH) GROUND CIRCUIT

Check continuity rear power return switch (LH) harness connector and ground.

Rear power return switch (LH)		Ground	Continuity
Connector	Terminal		
B106	2		Existed

Is the inspection result normal?

YES >> GO TO 4.
NO >> Repair or replace harness.

4. CHECK REAR POWER RETURN SWITCH (LH)

Check rear power return switch (LH).
Refer to SE-22, "LH : Component Inspection".

Is the inspection result normal?

YES >> GO TO 5.
NO >> Replace rear power return switch (LH). Refer to SE-133, "Removal and Installation".

5. CHECK INTERMITTENT INCIDENT

Refer to GI-40, "Intermittent Incident".

>> INSPECTION END

LH : Component Inspection

INFOID:0000000004758054

1. CHECK REAR POWER RETURN SWITCH (LH)

1. Turn ignition switch OFF.
2. Disconnect rear power return switch (LH) connector.
3. Check rear power return switch (LH) terminals.

Rear power return switch (LH) connector	Terminal		Condition	Continuity
B106	1	2	Rear power return switch (LH) is pressed	Existed
			Rear power return switch (LH) is released	Not existed

Is the inspection result normal?

YES >> Rear power return switch (LH) is OK.
NO >> Replace rear power return switch (LH). Refer to SE-133, "Removal and Installation".

RH

RH : Description

INFOID:0000000004758055

Switch that performs the return operation.

RH : Component Function Check

INFOID:0000000004758056

1. CHECK FUNCTION

Check that the rear seatback (RH) rises when pressing and holding the rear power return switch (RH).

Is the inspection result normal?

YES >> Rear power return switch (RH) is OK.
NO >> Refer to SE-22, "RH : Diagnosis Procedure".

RH : Diagnosis Procedure

INFOID:0000000004758057

1. CHECK REAR SEATBACK POWER RETURN CONTROL UNIT OUTPUT SIGNAL

1. Turn ignition switch OFF.
2. Disconnect rear power return switch (RH) connector.
3. Check voltage between rear power return switch (RH) harness connector and ground.

(+)		(–)	Voltage (V) (Approx.)
Rear power return switch (RH)			
Connector	Terminal		
B105	1	Ground	5

Is the inspection result normal?

YES >> GO TO 3.
NO >> GO TO 2.

2. CHECK REAR POWER RETURN SWITCH (RH) CIRCUIT

1. Disconnect rear seatback power return control unit connector.
2. Check continuity between rear seatback power return control unit harness connector and rear power return switch (RH) harness connector.

Rear seatback power return control unit		Rear power return switch (RH)		Continuity
Connector	Terminal	Connector	Terminal	
B493	20	B105	1	Existed

3. Check continuity between rear seatback power return control unit harness connector and ground.

Rear seatback power return control unit		Ground	Continuity
Connector	Terminal		
M493	20		Not existed

Is the inspection result normal?

YES >> Replace rear seatback power return control unit. Refer to SE-127, "Removal and Installation".
NO >> Repair or replace harness.

3. CHECK REAR POWER RETURN SWITCH (RH) GROUND CIRCUIT

Check continuity rear power return switch (RH) harness connector and ground.

Rear power return switch (RH)		Ground	Continuity
Connector	Terminal		
B105	2		Existed

Is the inspection result normal?

YES >> GO TO 4.
NO >> Repair or replace harness.

4. CHECK REAR POWER RETURN SWITCH (RH)

Check rear power return switch (RH).
Refer toSE-23, "RH : Component Inspection".

Is the inspection result normal?

YES >> GO TO 5.
NO >> Replace rear power return switch (RH). Refer to SE-133, "Removal and Installation".

5. CHECK INTERMITTENT INCIDENT

Refer to GI-40, "Intermittent Incident".

>> INSPECTION END

RH : Component Inspection

INFOID:0000000004758058

1. CHECK REAR POWER RETURN SWITCH (RH)

1. Turn ignition switch OFF.
2. Disconnect rear power return switch (RH) connector.
3. Check rear power return switch (RH) terminals.

Rear power return switch (RH) connector	Terminal		Condition	Continuity
B105	1	2	Rear power return switch (RH) is pressed	Existed
			Rear power return switch (RH) is released	Not existed

Is the inspection result normal?

YES >> Rear power return switch (RH) is OK.

NO >> Replace rear power return switch (RH). Refer to SE-133, "Removal and Installation".

PRIMARY POSITION LIMIT SWITCH

LH

LH : Description

INFOID:0000000004758059

Detect the initial position of sector gear (LH).

LH : Component Function Check

INFOID:0000000004758060

1. CHECK FUNCTION

Check that the rear seatback (LH) rises when pressing and holding the power return switch (LH).

Is the inspection result normal?

YES >> Primary position limit switch (LH) is OK.
NO >> Refer to SE-25, "LH : Diagnosis Procedure".

LH : Diagnosis Procedure

INFOID:0000000004758061

1. CHECK REAR SEATBACK POWER RETURN CONTROL UNIT OUTPUT SIGNAL

1. Turn ignition switch OFF.
2. Disconnect primary position limit switch (LH) connector.
3. Check voltage between primary position limit switch (LH) connector and ground.

(+)		(–)	Voltage (V) (Approx.)
Primary position limit switch (LH)			
Connector	Terminal		
B499	1	Ground	Battery voltage

NOTE:
It is not low power consumption mode.

Is the inspection result normal?

YES >> GO TO 3.
NO >> GO TO 2.

2. CHECK PRIMARY POSITION LIMIT SWITCH (LH) SIGNAL CIRCUIT

1. Disconnect rear seatback power return control unit connector.
2. Check continuity between rear seatback power return control unit harness connector and primary position limit switch (LH) harness connector.

Rear seatback power return control unit		Primary position limit switch (LH)		Continuity
Connector	Terminal	Connector	Terminal	
B493	21	B499	1	Existed

3. Check continuity between rear seatback power return control unit harness connector and ground.

Rear seatback power return control unit		Ground	Continuity
Connector	Terminal		
B493	21		Not existed

Is the inspection result normal?

YES >> Replace rear seatback power return control unit. Refer to SE-127, "Removal and Installation".
NO >> Repair or replace harness.

3. CHECK PRIMARY POSITION LIMIT SWITCH (LH) GROUND CIRCUIT

1. Check continuity between rear seatback power return control unit harness connector and primary position limit switch (LH) harness connector.

Rear seatback power return control unit		Primary position limit switch (LH)		Continuity
Connector	Terminal	Connector	Terminal	
B493	31	B499	2	Existed

2. Check continuity between rear seatback power return control unit harness connector and ground.

Rear seatback power return control unit		Ground	Continuity
Connector	Terminal		
B493	31		Not existed

Is the inspection result normal?

YES >> GO TO 4.
NO >> Repair or replace harness.

4. CHECK PRIMARY POSITION LIMIT SWITCH (LH)

Check primary position limit switch (LH).
Refer to SE-26, "LH : Component Inspection".

Is the inspection result normal?

YES >> GO TO 5.
NO >> Replace primary position limit switch (LH) [reclining device assembly (LH)]. Refer to SE-114, "Exploded View".

5. CHECK INTERMITTENT INCIDENT

Refer to GI-40, "Intermittent Incident".

>> INSPECTION END

LH : Component Inspection

INFOID:0000000004758062

COMPONENT INSPECTION

1. CHECK PRIMARY POSITION LIMIT SWITCH (LH)

1. Turn ignition switch OFF.
2. Disconnect primary position limit switch (LH) connector.
3. Check primary position limit switch (LH) terminals.

Primary position limit switch (LH) connector	Terminal		Condition	Continuity
B499	1	2	Primary position limit switch (LH) is pressed	Existed
			Primary position limit switch (LH) is released	Not existed

Is the inspection result normal?

YES >> Primary position limit switch (LH) is OK.
NO >> Replace primary position limit switch (LH) [reclining device assembly (LH)]. Refer to SE-114, "Exploded View".

RH

RH : Description

INFOID:0000000004758063

Detect the initial position of sector gear (RH).

RH : Component Function Check

INFOID:0000000004758064

1. CHECK FUNCTION

Check that the rear seatback (RH) rises when pressing and holding the power return switch (RH).

Is the inspection result normal?

YES >> Primary position limit switch (RH) is OK.
NO >> Refer to SE-27, "RH : Diagnosis Procedure".

RH : Diagnosis Procedure

INFOID:0000000004758065

1. CHECK REAR SEATBACK POWER RETURN CONTROL UNIT OUTPUT SIGNAL

1. Turn ignition switch OFF.
2. Disconnect primary position limit switch (RH) connector.
3. Check voltage between primary position limit switch (RH) harness connector and ground.

(+)		(–)	Voltage (V) (Approx.)
Primary position limit switch (RH)			
Connector	Terminal		
B495	1	Ground	Battery voltage

NOTE:
It is not low power consumption mode.

Is the inspection result normal?

YES >> GO TO 3.
NO >> GO TO 2.

2. CHECK PRIMARY POSITION LIMIT SWITCH (RH) SIGNAL CIRCUIT

1. Disconnect rear seatback power return control unit connector.
2. Check continuity between rear seatback power return control unit harness connector and primary position limit switch (RH) harness connector.

Rear seatback power return control unit		Primary position limit switch (RH)		Continuity
Connector	Terminal	Connector	Terminal	
B493	22	B495	1	Existed

3. Check continuity between rear seatback power return control unit harness connector and ground.

Rear seatback power return control unit		Ground	Continuity
Connector	Terminal		
B493	22		Not existed

Is the inspection result normal?

YES >> Replace rear seatback return control unit. Refer to SE-127, "Removal and Installation".
NO >> Repair or replace harness.

3. CHECK PRIMARY POSITION LIMIT SWITCH (RH) GROUND CIRCUIT

1. Check continuity between rear seatback power return control unit harness connector and primary position limit switch (RH) harness connector.

Rear seatback power return control unit		Primary position limit switch (RH)		Continuity
Connector	Terminal	Connector	Terminal	
B493	23	B495	2	Existed

2. Check continuity between rear seatback power return control unit harness connector and ground.

Rear seatback power return control unit		Ground	Continuity
Connector	Terminal		
B493	23		Not existed

Is the inspection result normal?

YES >> GO TO 4.
NO >> Repair or replace harness.

4. CHECK PRIMARY POSITION LIMIT SWITCH (RH)

Check primary position limit switch (RH).
Refer to SE-28, "RH : Component Inspection".

Is the inspection result normal?

YES >> GO TO 5.
NO >> Replace primary position limit switch (RH) [reclining device assembly (RH)]. Refer to SE-114, "Exploded View".

5.CHECK INTERMITTENT INCIDENT

Refer to GI-40, "Intermittent Incident".

>> INSPECTION END

RH : Component Inspection

INFOID:0000000004758066

COMPONENT INSPECTION

1.CHECK PRIMARY POSITION LIMIT SWITCH (RH)

1. Turn ignition switch OFF.
2. Disconnect primary position limit switch (RH) connector.
3. Check primary position limit switch (RH) terminals.

Primary position limit switch (RH) connector	Terminal		Condition	Continuity
B495	1	2	Primary position limit switch (RH) is pressed	Existed
			Primary position limit switch (RH) is released	Not existed

Is the inspection result normal?

YES >> Primary position limit switch (RH) is OK.
NO >> SE-114, "Exploded View"Replace primary position limit switch (RH) [reclining device assembly (RH)]. Refer to .

RETURN COMPLETE LIMIT SWITCH

LH

LH : Description

INFOID:0000000004758067

Detect the return completion position of rear seatback (LH).

LH : Component Function Check

INFOID:0000000004758068

1. CHECK FUNCTION

Check that the rear seatback (LH) rises when pressing and holding the power return switch (LH).

Is the inspection result normal?

YES >> Return complete limit switch (LH) is OK.
NO >> Refer to SE-29, "LH : Diagnosis Procedure".

LH : Diagnosis Procedure

INFOID:0000000004758069

1. CHECK REAR SEATBACK POWER RETURN CONTROL UNIT OUTPUT SIGNAL

1. Turn ignition switch OFF.
2. Disconnect return complete limit switch (LH) connector.
3. Check voltage between return complete limit switch (LH) harness connector and ground.

(+)		(–)	Voltage (V) (Approx.)
Return complete limit switch (LH)			
Connector	Terminal		
B500	1	Ground	Battery voltage

NOTE:
It is not low power consumption mode.

Is the inspection result normal?

YES >> GO TO 3.
NO >> GO TO 2.

2. CHECK RETURN COMPLETE LIMIT SWITCH (LH) SIGNAL CIRCUIT

1. Disconnect rear seatback power return control unit connector.
2. Check continuity between rear seatback power return control unit harness connector and return complete limit switch (LH) harness connector.

Rear seatback power return control unit		Return complete limit switch (LH)		Continuity
Connector	Terminal	Connector	Terminal	
B493	29	B500	1	Existed

3. Check continuity between rear seatback power return control unit harness connector and ground.

Rear seatback power return control unit		Ground	Continuity
Connector	Terminal		
B493	29		Not existed

Is the inspection result normal?

YES >> Replace rear seatback power return control unit. Refer to SE-127, "Removal and Installation".
NO >> Repair or replace harness.

3. CHECK RETURN COMPLETE LIMIT SWITCH (LH) GROUND CIRCUIT

1. Check continuity between rear seatback power return control unit harness connector and return complete limit switch (LH) harness connector.

Rear seatback power return control unit		Return complete limit switch (LH)		Continuity
Connector	Terminal	Connector	Terminal	
B493	31	B500	2	Existed

2. Check continuity between rear seatback power return control unit harness connector and ground.

Rear seatback power return control unit		Ground	Continuity
Connector	Terminal		
B493	31		Not existed

Is the inspection result normal?

YES >> GO TO 4.
NO >> Repair or replace harness.

4. CHECK RETURN COMPLETE LIMIT SWITCH (LH)

Check return complete limit switch (LH).
Refer to SE-30, "LH : Component Inspection".

Is the inspection result normal?

YES >> GO TO 5.
NO >> Replace return complete limit switch (LH) [reclining device assembly (LH)]. Refer to SE-114, "Exploded View".

5. CHECK INTERMITTENT INCIDENT

Refer to GI-40, "Intermittent Incident".

>> INSPECTION END

LH : Component Inspection

INFOID:0000000004758070

COMPONENT INSPECTION

1. CHECK RETURN COMPLETE LIMIT SWITCH (LH)

1. Turn ignition switch OFF.
2. Disconnect return complete limit switch (LH) connector.
3. Check return complete limit switch (LH) terminals.

Return complete limit switch (LH) connector	Terminal		Condition	Continuity
B500	1	2	Return complete limit switch (LH) is pressed	Existed
			Return complete limit switch (LH) is released	Not existed

Is the inspection result normal?

YES >> Return complete limit switch (LH) is OK.
NO >> Replace return complete limit switch (LH) [reclining device assembly (LH)]. Refer to SE-114, "Exploded View".

RH

RH : Description

INFOID:0000000004758071

Detect the return completion position of rear seatback (RH).

RH : Component Function Check

INFOID:0000000004758072

1. CHECK FUNCTION

Check that the rear seatback (RH) rises when pressing and holding the power return switch (RH).

Is the inspection result normal?

YES >> Return complete limit switch (RH) is OK.
NO >> Refer to SE-31, "RH : Diagnosis Procedure".

RH : Diagnosis Procedure

INFOID:0000000004758073

1. CHECK REAR SEATBACK POWER RETURN CONTROL UNIT OUTPUT SIGNAL

1. Turn ignition switch OFF.
2. Disconnect return complete limit switch (RH) connector.
3. Check voltage between return complete limit switch (RH) harness connector and ground.

(+)		(–)	Voltage (V) (Approx.)
Return complete limit switch (RH)			
Connector	Terminal		
B496	1	Ground	Battery voltage

NOTE:
It is not low power consumption mode.

Is the inspection result normal?

YES >> GO TO 3.
NO >> GO TO 2.

2. CHECK RETURN COMPLETE LIMIT SWITCH (RH) SIGNAL CIRCUIT

1. Disconnect rear seatback power return control unit connector.
2. Check continuity between rear seatback power return control unit harness connector and return complete limit switch (RH) harness connector.

Rear seatback power return control unit		Return complete limit switch (RH)		Continuity
Connector	Terminal	Connector	Terminal	
B493	30	B496	1	Existed

3. Check continuity between rear seatback power return control unit harness connector and ground.

Rear seatback power return control unit		Ground	Continuity
Connector	Terminal		
B493	30		Not existed

Is the inspection result normal?

YES >> Replace rear seatback power return control unit. Refer to SE-127, "Removal and Installation".
NO >> Repair or replace harness.

3. CHECK RETURN COMPLETE LIMIT SWITCH (RH) GROUND CIRCUIT

1. Check continuity between rear seatback power return control unit harness connector and return complete limit switch (RH) harness connector.

Rear seatback power return control unit		Return complete limit switch (RH)		Continuity
Connector	Terminal	Connector	Terminal	
B493	23	B496	2	Existed

2. Check continuity between rear seatback power return control unit harness connector and ground.

Rear seatback power return control unit		Ground	Continuity
Connector	Terminal		
B493	23		Not existed

Is the inspection result normal?

YES >> GO TO 4.
NO >> Repair or replace harness.

4. CHECK RETURN COMPLETE LIMIT SWITCH (RH)

Check return complete limit switch (RH).
Refer to SE-32, "RH : Component Inspection".

Is the inspection result normal?

YES >> GO TO 5.
NO >> Replace return complete limit switch (RH) [reclining device assembly (RH)]. Refer to SE-114, "Exploded View".

5. CHECK INTERMITTENT INCIDENT

Refer to GI-40, "Intermittent Incident".

>> INSPECTION END

RH : Component Inspection

INFOID:0000000004758074

COMPONENT INSPECTION

1. CHECK RETURN COMPLETE LIMIT SWITCH (RH)

1. Turn ignition switch OFF.
2. Disconnect return complete limit switch (RH) connector.
3. Check return complete limit switch (RH) terminals.

Return complete limit switch (RH) connector	Terminal		Condition	Continuity
B496	1	2	Return complete limit switch (RH) is pressed	Existed
			Return complete limit switch (RH) is released	Not existed

Is the inspection result normal?

YES >> Return complete limit switch (RH) is OK.
NO >> Replace return complete limit switch (RH) [reclining device assembly (RH)]. Refer to SE-114, "Exploded View".

MOTOR SENSOR

LH

LH : Description

INFOID:0000000004758075

Detect the operation condition of power return motor (LH).

LH : Component Function Check

INFOID:0000000004758076

1.CHECK FUNCTION

Check that the rear seatback (LH) rises when pressing and holding the power return switch (LH).

Is the inspection result normal?

YES >> Motor sensor (LH) is OK.
NO >> Refer to SE-33, "LH : Diagnosis Procedure".

LH : Diagnosis Procedure

INFOID:0000000004758077

1.CHECK MOTOR SENSOR (LH) OUTPUT SIGNAL

1. Turn ignition switch OFF.
2. Check voltage between rear seatback power return control unit harness connector and ground.

(+) Rear seatback power return control unit		(–)	Condition	Voltage (V) (Approx.)
Connector	Terminal			
B492	10	Ground	During the power return motor (LH) operation	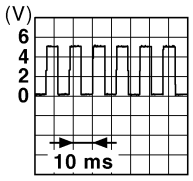 JMKIA0070GB
			When pinching between LH/RH seats occurs	The above pulse width should be expanded

Is the inspection result normal?

YES >> GO TO 7.
NO >> GO TO 2.

2.CHECK MOTOR SENSOR (LH) SIGNAL CIRCUIT

1. Disconnect power return motor assembly (LH) connector and rear seatback power return control unit connector.
2. Check continuity between power return motor assembly (LH) harness connector and rear seatback power return control unit harness connector.

Rear seatback power return control unit		Power return motor assembly (LH)		Continuity
Connector	Terminal	Connector	Terminal	
B492	10	B498	3	Existed

3. Check continuity between power return motor assembly (LH) harness connector and ground.

Rear seatback power return control unit		Ground	Continuity
Connector	Terminal		
B492	10		Not existed

Is the inspection result normal?

YES >> GO TO 3.

NO >> Repair or replace harness.

3. CHECK MOTOR SENSOR (LH) POWER SUPPLY

1. Connect rear seatback power return control unit connector.
2. Check voltage between power return motor assembly (LH) harness connector and ground.

(+)		(–)	Condition	Voltage (V) (Approx.)
Power return motor assembly (LH)				
Connector	Terminal			
B498	6	Ground	When the power return motor is operated	Battery voltage

Is the inspection result normal?

YES >> GO TO 5.
NO >> GO TO 4.

4. CHECK MOTOR SENSOR (LH) POWER SUPPLY CIRCUIT

1. Disconnect rear seatback power return control unit connector.
2. Check continuity between rear seatback power return control unit harness connector and power return motor assembly (LH) harness connector.

Rear seatback power return control unit		Power return motor assembly (LH)		Continuity
Connector	Terminal	Connector	Terminal	
B492	11	B498	6	Existed

3. Check continuity between rear seatback power return control unit harness connector and ground.

Rear seatback power return control unit		Ground	Continuity
Connector	Terminal		
B492	11		Not existed

Is the inspection result normal?

YES >> Replace rear seatback power return control unit. Refer to SE-127, "Removal and Installation".
NO >> Repair or replace harness.

5. CHECK MOTOR SENSOR (LH) GROUND CIRCUIT 1

1. Disconnect rear seatback power return control unit connector.
2. Check continuity between rear seatback power return control unit harness connector and power return motor assembly harness connector.

Rear seatback power return control unit		Power return motor assembly (LH)		Continuity
Connector	Terminal	Connector	Terminal	
B492	9	B498	4	Existed

Is the inspection result normal?

YES >> GO TO 6.
NO >> Repair or replace harness.

6. CHECK MOTOR SENSOR (LH) GROUND CIRCUIT 2

1. Connect rear seatback power return control unit connector.
2. Check between rear seatback power return control unit harness connector and ground.

Rear seatback power return control unit		Ground	Continuity
Connector	Terminal		
B492	9		Existed

Is the inspection result normal?

YES >> Replace motor sensor (LH) [reclining device assembly (LH)]. Refer to SE-114, "Exploded View".
NO >> Replace rear seatback power return control unit. Refer to SE-127, "Removal and Installation".

7. CHECK INTERMITTENT INCIDENT

Refer to GI-40, "Intermittent Incident".

>> INSPECTION END

RH

RH : Description

INFOID:0000000004758078

Detect the operation condition of power return motor (RH).

RH : Component Function Check

INFOID:0000000004758079

1. CHECK FUNCTION

Check that the rear seatback (RH) rises when pressing and holding the power return switch (RH).

Is the inspection result normal?

YES >> Motor sensor (RH) is OK.
NO >> Refer to SE-35, "RH : Diagnosis Procedure".

RH : Diagnosis Procedure

INFOID:0000000004758080

1. CHECK MOTOR SENSOR (RH) OUTPUT SIGNAL

1. Turn ignition switch OFF.
2. Check voltage between rear seatback power return control unit harness connector and ground.

(+)		(–)	Condition	Voltage (V) (Approx.)
Rear seatback power return control unit				
Connector	Terminal			
B492	2	Ground	During the power return motor (RH) operation	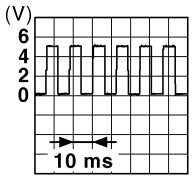 JMKIA0070GB
			When pinching between LH/RH seats occurs	The above pulse width should be expanded

Is the inspection result normal?

YES >> GO TO 7.
NO >> GO TO 2.

2. CHECK MOTOR SENSOR (RH) SIGNAL CIRCUIT

1. Disconnect power return motor assembly (RH) connector and rear seatback power return control unit connector.
2. Check continuity between power return motor assembly (RH) harness connector and rear seatback power return control unit harness connector.

Rear seatback power return control unit		Power return motor assembly (RH)		Continuity
Connector	Terminal	Connector	Terminal	
B492	2	B494	3	Existed

3. Check continuity between power return motor assembly (RH) harness connector and ground.

Rear seatback power return control unit		Ground	Continuity
Connector	Terminal		
B492	2		Not existed

Is the inspection result normal?

YES >> GO TO 3.
NO >> Repair or replace harness.

3. CHECK MOTOR SENSOR (RH) POWER SUPPLY

1. Connect rear seatback power return control unit connector.
2. Check voltage between power return motor assembly (RH) harness connector and ground.

(+)		(–)	Condition	Voltage (V) (Approx.)
Power return motor assembly (RH)				
Connector	Terminal			
B494	6	Ground	When the power return motor is operated	Battery voltage

Is the inspection result normal?

YES >> GO TO 5.
NO >> GO TO 4.

4. CHECK MOTOR SENSOR (RH) POWER SUPPLY CIRCUIT

1. Disconnect rear seatback power return control unit connector.
2. Check continuity between rear seatback power return control unit harness connector and power return motor assembly (RH) harness connector.

Rear seatback power return control unit		Power return motor assembly (RH)		Continuity
Connector	Terminal	Connector	Terminal	
B492	3	B494	6	Existed

3. Check continuity between rear seatback power return control unit harness connector and ground.

Rear seatback power return control unit		Ground	Continuity
Connector	Terminal		
B492	3		Not existed

Is the inspection result normal?

YES >> Replace rear seatback power return control unit. Refer to SE-127, "Removal and Installation".
NO >> Repair or replace harness.

5. CHECK MOTOR SENSOR (RH) GROUND CIRCUIT 1

1. Disconnect rear seatback power return control unit connector.
2. Check continuity between rear seatback power return control unit harness connector power return motor assembly harness connector.

Rear seatback power return control unit		Power return motor assembly (RH)		Continuity
Connector	Terminal	Connector	Terminal	
B492	1	B494	4	Existed

Is the inspection result normal?

YES >> GO TO 6.
NO >> Repair or replace harness.

6. CHECK MOTOR SENSOR (RH) GROUND CIRCUIT 2

1. Connect rear seatback power return control unit connector.
2. Check between rear seatback power return control unit harness connector and ground.

Rear seatback power return control unit		Ground	Continuity
Connector	Terminal		
B492	9		Existed

Is the inspection result normal?

YES >> Replace motor sensor (RH) [reclining device assembly (RH)]. Refer to SE-114, "Exploded View".
NO >> Replace rear seatback power return control unit. Refer to SE-127, "Removal and Installation".

7. CHECK INTERMITTENT INCIDENT

Refer to GI-40, "Intermittent Incident".

>> INSPECTION END

POWER RETURN MOTOR

LH

LH : Description

INFOID:0000000004758081

Operate the rear seatback.

LH : Component Function Check

INFOID:0000000004758082

1. CHECK FUNCTION

Check that the rear seatback (LH) rises when pressing and holding the power return switch (LH).

Is the inspection result normal?

YES >> Power return motor (LH) is OK.
NO >> Refer to SE-38, "LH : Diagnosis Procedure".

LH : Diagnosis Procedure

INFOID:0000000004758083

1. CHECK POWER RETURN MOTOR (LH) INPUT SIGNAL

1. Turn ignition switch OFF.
2. Check voltage between power return motor assembly (LH) harness connector and ground.

(+)		(–)	Condition	Voltage (V) (Approx.)
Power return motor assembly (LH)				
Connector	Terminal			
B498	1	Ground	During the power return motor (LH) return operation	Battery voltage
			Other than the above	0
	5		During the power return motor (LH) reverse operation	Battery voltage
			Other than the above	0

Is the inspection result normal?

YES >> Replace power return motor assembly (LH) [reclining device assembly (LH)]. Refer to SE-114, "Exploded View".
NO >> GO TO 2.

2. CHECK POWER RETURN MOTOR (LH) CIRCUIT

1. Disconnect rear seatback power return control unit connector and power return motor assembly (LH) connector.
2. Check continuity between rear seatback power return control unit harness connector and power return motor assembly (LH) harness connector.

Rear seatback power return control unit		Power return motor assembly (LH)		Continuity
Connector	Terminal	Connector	Terminal	
B492	5	B498	5	Existed
	6		1	

3. Check continuity between rear seatback power return control unit harness connector and ground.

Rear seatback power return control unit		Ground	Continuity
Connector	Terminal		
B492	5		Not existed
	6		

Is the inspection result normal?

YES >> Replace rear seatback power return control unit. Refer to SE-127, "Removal and Installation".

NO >> Repair or replace harness.

RH

RH : Description

INFOID:0000000004758084

Operate the rear seatback.

RH : Component Function Check

INFOID:0000000004758085

1. CHECK FUNCTION

Check that the rear seatback (RH) rises when pressing and holding the power return switch (RH).

Is the inspection result normal?

YES >> Power return motor (RH) is OK.
NO >> Refer to SE-39, "RH : Diagnosis Procedure".

RH : Diagnosis Procedure

INFOID:0000000004758086

1. CHECK POWER RETURN MOTOR (RH) INPUT SIGNAL

1. Turn ignition switch OFF.
2. Check voltage between power return motor assembly (RH) harness connector and ground.

(+)		(–)	Condition	Voltage (V) (Approx.)
Power return motor assembly (RH)				
Connector	Terminal			
B494	1	Ground	During the power return motor (RH) return operation	Battery voltage
			Other than the above	0
	5		During the power return motor (RH) reverse operation	Battery voltage
			Other than the above	0

Is the inspection result normal?

YES >> Replace power return motor assembly (RH) [reclining device assembly (RH)]. Refer to SE-114, "Exploded View".
NO >> GO TO 2.

2. CHECK POWER RETURN MOTOR (RH) CIRCUIT

1. Disconnect rear seatback power return control unit connector and power return motor assembly (RH) connector.
2. Check continuity between rear seatback power return control unit harness connector and power return motor assembly (RH) harness connector.

Rear seatback power return control unit		Power return motor assembly (RH)		Continuity
Connector	Terminal	Connector	Terminal	
B492	7	B494	5	Existed
	8		1	

3. Check continuity between rear seatback power return control unit harness connector and ground.

Rear seatback power return control unit		Ground	Continuity
Connector	Terminal		
B492	7		Not existed
	8		

Is the inspection result normal?

YES >> Replace rear seatback power return control unit. Refer to SE-127, "Removal and Installation".
NO >> Repair or replace harness.

VEHICLE SPEED SIGNAL CIRCUIT

Description

INFOID:0000000004758087

Transmits vehicle speed signal to rear seatback power return control unit.

Component Function Check

INFOID:0000000004758088

1.CHECK FUNCTION

Check that the rear seatback rises when pressing and holding the power return switch.

Is the inspection result normal?

YES >> Vehicle speed signal circuit is OK.
NO >> Refer to SE-40, "Diagnosis Procedure".

Diagnosis Procedure

INFOID:0000000004758089

1.CHECK VEHICLE SPEED OPERATION

1. Check speed meter operate normally.

Is the inspection result normal?

YES >> GO TO 2.
NO >> Refer toMWI-4, "Work flow".

2.CHECK VEHICLE SPEED INPUT SIGNAL

Check voltage between rear seatback power return control unit harness connector and ground.

(+)		(–)	Condition	Voltage (V) (Approx.)
Rear seatback power return control unit				
Connector	Terminal			
B493	24	Ground	When vehicle speed is approx.40 km/h (25MPH)	**NOTE:** Maximum voltage may be 12V due to specifications (connected units) 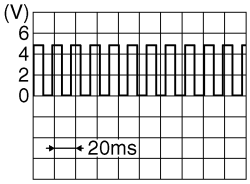 SKIA6649J

Is the inspection result normal?

YES >> GO TO 3.
NO >> Refer toMWI-4, "Work flow".

3.CHECK VEHICLE SPEED SIGNAL CIRCUIT

1. Disconnect rear seatback power return control unit connector and combination meter connector.
2. Check continuity between power return control unit harness connector and combination meter harness connector.

Rear seatback power return control unit		Combination meter		Continuity
Connector	Terminal	Connector	Terminal	
B493	24	M34	31	Existed

3. Check continuity between rear seatback power return control unit harness connector and ground.

Rear seatback power return control unit		Ground	Continuity
Connector	Terminal		
B493	24		Not existed

Is the inspection result normal?

YES >> GO TO 4.
NO >> Repair or replace harness.

4. CHECK INTERMITTENT INCIDENT

Refer to GI-40, "Intermittent Incident".

>> INSPECTION END

TILT&TELESCOPIC SWITCH

Description

INFOID:0000000003566153

Tilt & telescopic switch as a unit, transmits switch operation signal to automatic drive positioner control unit.

Component Function Check

INFOID:0000000003566154

1.CHECK TILT & TELESCOPIC SWITCH FUNCTION

Check tilt & telescopic operation with tilt & telescopic switch.

Is the inspection results normal?

YES >> Tilt & telescopic switch is OK.
NO >> Refer to SE-42, "Diagnosis Procedure".

Diagnosis Procedure

INFOID:0000000003566155

1.CHECK AUTOMATIC DRIVE POSITIONER CONTROL UNIT OUTPUT SIGNAL

1. Turn ignition switch OFF.
2. Disconnect tilt & telescopic switch connector.
3. Check voltage between tilt & telescopic switch harness connector and ground.

(+)		(–)	Voltage (V) (Approx.)
Tilt & telescopic switch			
Connector	Terminal		
M102	2	Ground	5
	3		
	4		
	5		

Is the inspection result normal?

YES >> GO TO 3.
NO >> GO TO 2.

2.CHECK TILT & TELESCOPIC SWITCH SIGNAL CIRCUIT

1. Disconnect automatic drive positioner control unit connector.
2. Check continuity between tilt & telescopic switch harness connector and automatic drive positioner control unit harness connector.

Tilt & telescopic switch		Automatic drive positioner control unit		Continuity
Connector	Terminal	Connector	Terminal	
M102	2	M75	1	Existed
	3		13	
	4		19	
	5		7	

3. Check continuity between tilt & telescopic switch harness connector and ground.

Tilt & telescopic switch			Continuity
Connector	Terminal	Ground	
M102	2		Not existed
	3		
	4		
	5		

Is the inspection result normal?

YES >> Replace automatic drive positioner control unit. Refer to SE-134, "Removal and Installation".
NO >> Repair or replace harness.

3. CHECK TILT & TELESCOPIC SWITCH GROUND CIRCUIT

Check continuity between tilt & telescopic switch harness connector and ground.

Tilt & telescopic switch		Ground	Continuity
Connector	Terminal		
M102	1		Existed

Is the inspection result normal?

YES >> GO TO 4.
NO >> Repair or replace harness.

4. CHECK TILT & TELESCOPIC SWITCH

Check tilt & telescopic switch.
Refer to SE-43, "Component Inspection".

Is the inspection result normal?

YES >> GO TO 5.
NO >> Replace tilt & telescopic switch.Refer toSE-135, "Removal and Installation".

5. CHECK INTERMITTENT INCIDENT

Refer to GI-40, "Intermittent Incident".

>> INSPECTION END

Component Inspection

INFOID:0000000003566156

1. CHECK TILT & TELESCOPIC SWITCH

1. Turn ignition switch OFF.
2. Disconnect tilt & telescopic switch connector.
3. Check continuity between tilt & telescopic switch terminals.

Terminal		Condition		Continuity
2	1	Tilt & telescopic switch	Upward position	Existed
			Other than above	Not existed
3			Downward position	Existed
			Other than above	Not existed
4			Backward position	Existed
			Other than above	Not existed
5			Forward position	Existed
			Other than above	Not existed

Is the inspection result normal?

YES >> Tilt & telescopic switch is OK.
NO >> Replace tilt & telescopic switch. Refer to SE-135, "Removal and Installation".

TILT MOTOR

Description

INFOID:0000000003566157

Tilt motor operates with the power received from automatic drive positioner control unit.

Component Function Check

INFOID:0000000003566158

1.CHECK TILT MOTOR FUNCTION

Check tilt operation with tilt & telescopic switch.

Is the inspection results normal?

YES >> Tilt motor is OK.
NO >> Refer to SE-44, "Diagnosis Procedure".

Diagnosis Procedure

INFOID:0000000003566159

1.CHECK TILT MOTOR INPUT SIGNAL

1. Turn ignition switch OFF.
2. Disconnect tilt motor connector.
3. Check voltage between tilt motor harness connector and ground.

(+)		(–)	Condition	Voltage (V) (Approx.)
Tilt motor				
Connector	Terminal			
M116	1	Ground	Tilt & telescopic switch is downward position	Battery voltage
			Other than above	0
	2		Tilt & telescopic switch is upward position	Battery voltage
			Other than above	0

Is the inspection result normal?

YES >> Replace tilt motor.
NO >> GO TO 2.

2.CHECK TILT MOTOR CIRCUIT

1. Disconnect automatic drive positioner control unit connector.
2. Check continuity between tilt motor harness connector and automatic drive positioner control unit harness connector.

Tilt motor		Automatic drive positioner control		Continuity
Connector	Terminal	Connector	Terminal	
M116	1	M104	28	Existed
	2		29	

3. Check continuity between tilt motor harness connector and ground.

Tilt motor		Ground	Continuity
Connector	Terminal		
M116	1		Not existed
	2		

Is the inspection result normal?

YES >> Replace automatic drive positioner control unit. Refer to SE-134, "Removal and Installation".
NO >> Repair or replace harness.

TELESCOPIC MOTOR

Description

INFOID:0000000003573807

Telescopic motor operates with the power received from automatic drive positioner control unit.

Component Function Check

INFOID:0000000003573808

1. CHECK TELESCOPIC MOTOR FUNCTION

Check telescopic operation with tilt & telescopic switch.

Is the inspection results normal?

YES >> Telescopic motor is OK.
NO >> Refer to SE-45, "Diagnosis Procedure".

Diagnosis Procedure

INFOID:0000000003573809

1. CHECK TELESCOPIC MOTOR INPUT SIGNAL

1. Turn ignition switch OFF.
2. Disconnect telescopic motor connector.
3. Check voltage between telescopic motor harness connector and ground.

(+)		(–)	Condition	Voltage (V) (Approx.)
Telescopic motor				
Connector	Terminal			
M117	1	Ground	Tilt & telescopic switch is backward position	Battery voltage
			Other than above	0
	2		Tilt & telescopic switch is forward position	Battery voltage
			Other than above	0

Is the inspection result normal?

YES >> Replace telescopic motor.
NO >> GO TO 2.

2. CHECK TELESCOPIC MOTOR CIRCUIT

1. Disconnect automatic drive positioner control unit connector.
2. Check continuity between telescopic motor harness connector and automatic drive positioner control unit harness connector.

Telescopic motor		Automatic drive positioner control		Continuity
Connector	Terminal	Connector	Terminal	
M117	1	M104	26	Existed
	2		29	

3. Check continuity between telescopic motor harness connector harness connector and ground.

Telescopic motor		Ground	Continuity
Connector	Terminal		
M117	1		Not existed
	2		

Is the inspection result normal?

YES >> Replace automatic drive positioner control unit. Refer to SE-134, "Removal and Installation".
NO >> Repair or replace harness.

POWER SEAT

Wiring Diagram - POWER SEAT (FOR DRIVER SIDE) -

INFOID:0000000003397016

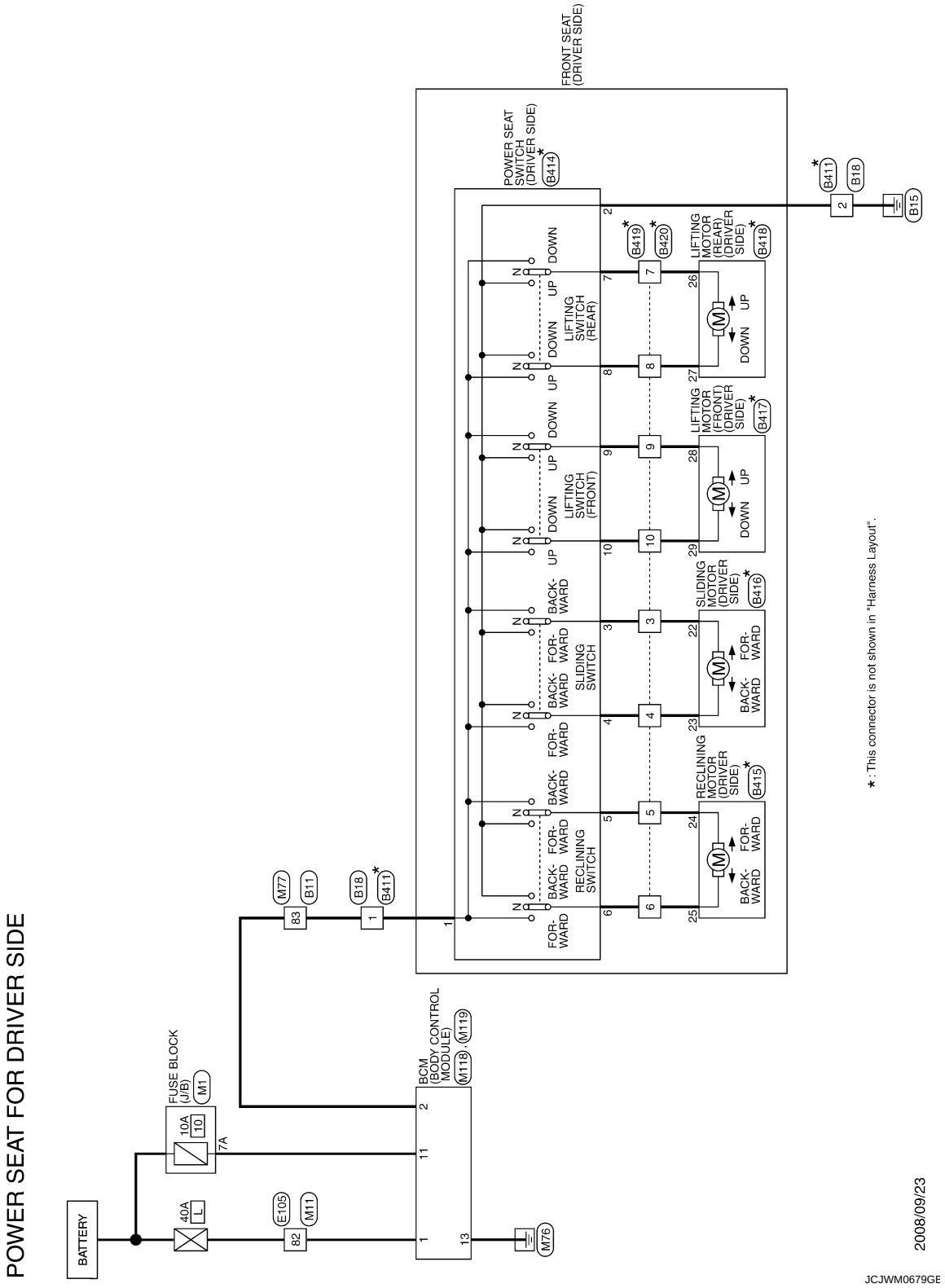

POWER SEAT FOR DRIVER SIDE

Connector No.	B11
Connector Name	WIRE TO WIRE
Connector Type	TH80MW-CS19

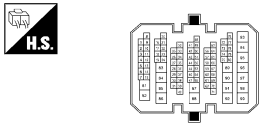

Terminal No.	Color of Wire	Signal Name [Specification]
83	BR	–

Connector No.	B18
Connector Name	WIRE TO WIRE
Connector Type	NS06FW-CS

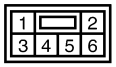

Terminal No.	Color of Wire	Signal Name [Specification]
1	BR	–
2	B	–

Connector No.	B411
Connector Name	WIRE TO WIRE
Connector Type	NS06MW-CS

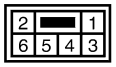

Terminal No.	Color of Wire	Signal Name [Specification]
1	R	–
2	B	–

Connector No.	B414
Connector Name	POWER SEAT SWITCH (DRIVER SIDE)
Connector Type	NS10FW-CS

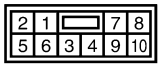

Terminal No.	Color of Wire	Signal Name [Specification]
1	R	–
2	B	–
3	G	–
4	G/R	–
5	V	–
6	R/L	–
7	L	–
8	L/W	–
9	L/R	–
10	L/B	–

Connector No.	B415
Connector Name	RECLINING MOTOR (DRIVER SIDE)
Connector Type	F 6098-0239

Terminal No.	Color of Wire	Signal Name [Specification]
24	V	–
25	R/L	–

Connector No.	B416
Connector Name	SLIDING MOTOR (DRIVER SIDE)
Connector Type	F 6098-0344

Terminal No.	Color of Wire	Signal Name [Specification]
22	G	–
23	G/R	–

Connector No.	B417
Connector Name	LIFTING MOTOR (FRONT) (DRIVER SIDE)
Connector Type	F 6098-0239

Terminal No.	Color of Wire	Signal Name [Specification]
28	L/R	–
29	L/B	–

Connector No.	B418
Connector Name	LIFTING MOTOR (REAR) (DRIVER SIDE)
Connector Type	F 6098-0239

Terminal No.	Color of Wire	Signal Name [Specification]
26	L	–
27	L/W	–

JCJWM0680GE

POWER SEAT FOR DRIVER SIDE

Connector No.	B419
Connector Name	WIRE TO WIRE
Connector Type	NS10MW-CS

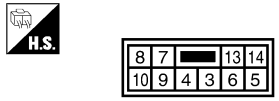

Terminal No.	Color of Wire	Signal Name [Specification]
3	G	–
4	G/R	–
5	V	–
6	R/L	–
7	L	–
8	L/W	–
9	L/R	–
10	L/B	–

Connector No.	B420
Connector Name	WIRE TO WIRE
Connector Type	NS10FW-CS

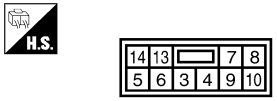

Terminal No.	Color of Wire	Signal Name [Specification]
3	G	–
4	G/R	–
5	V	–
6	R/L	–
7	L	–
8	L/W	–
9	L/R	–
10	L/B	–

Connector No.	E105
Connector Name	WIRE TO WIRE
Connector Type	TH70MW-CS10-M3

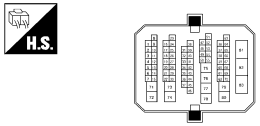

Terminal No.	Color of Wire	Signal Name [Specification]
82	LG	–

Connector No.	M1
Connector Name	FUSE BLOCK (J/B)
Connector Type	NS06FW-M2

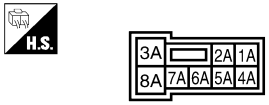

Terminal No.	Color of Wire	Signal Name [Specification]
7A	LG	–

Connector No.	M11
Connector Name	WIRE TO WIRE
Connector Type	TH70FW-CS10-M3

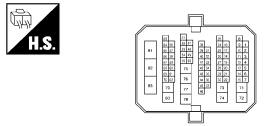

Terminal No.	Color of Wire	Signal Name [Specification]
82	W	–

Connector No.	M77
Connector Name	WIRE TO WIRE
Connector Type	TH80FW-CS19

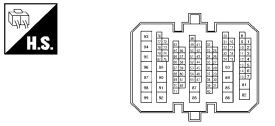

Terminal No.	Color of Wire	Signal Name [Specification]
83	GR	–[With driver side power seat]

Connector No.	M118
Connector Name	BCM (BODY CONTROL MODULE)
Connector Type	M03FB-LC

Terminal No.	Color of Wire	Signal Name [Specification]
1	W	BAT (F/L)
2	GR	POWER WINDOW POWER SUPPLY (BAT)

Connector No.	M119
Connector Name	BCM (BODY CONTROL MODULE)
Connector Type	NS16FW-CS

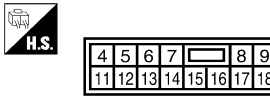

Terminal No.	Color of Wire	Signal Name [Specification]
11	LG	BAT (FUSE)
13	B	GND

JCJWM0681GE

Wiring Diagram - POWER SEAT (FOR PASSENGER SIDE) -

INFOID:0000000003397017

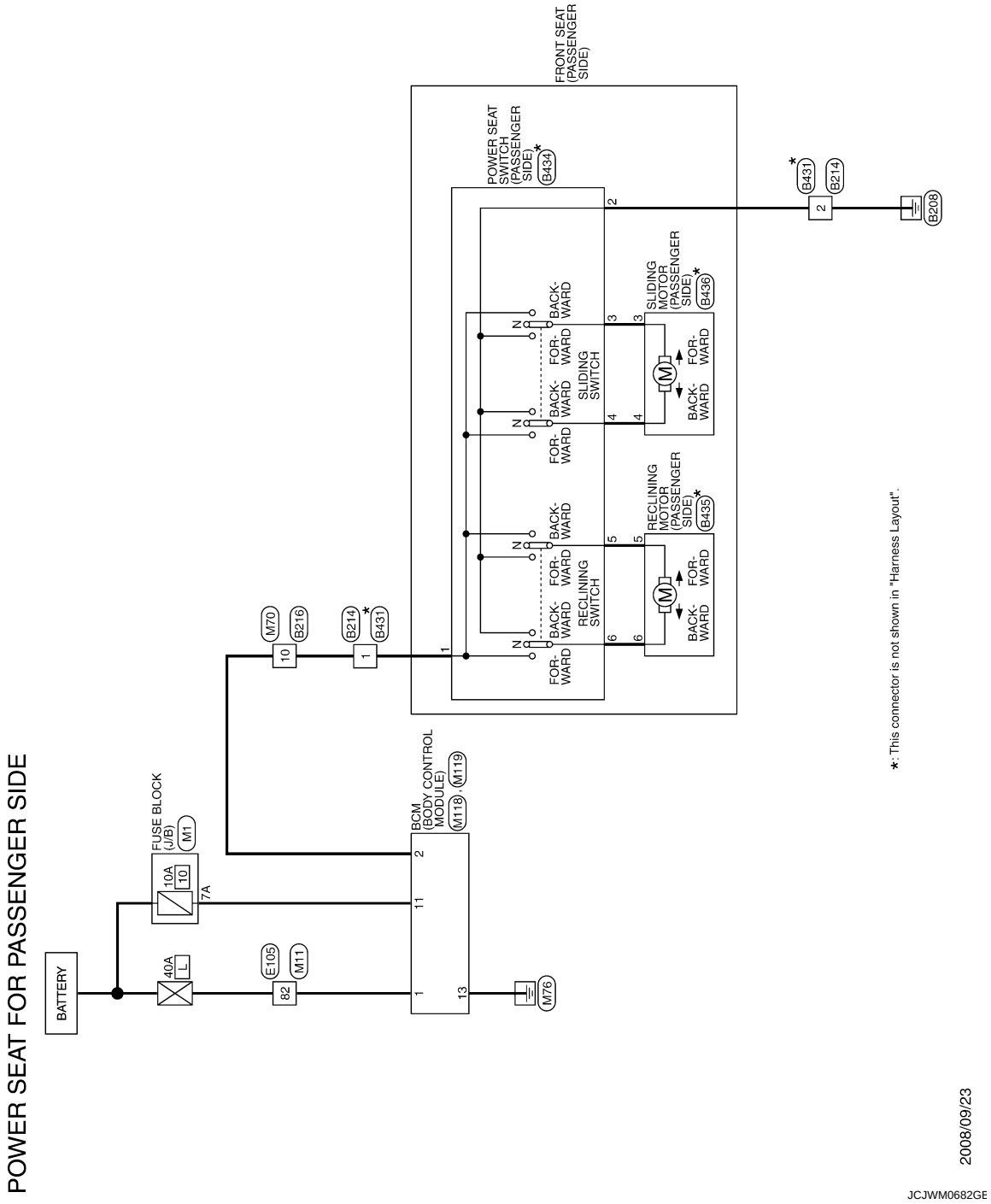

POWER SEAT FOR PASSENGER SIDE

Connector No.	B214
Connector Name	WIRE TO WIRE
Connector Type	NS06FW-CS

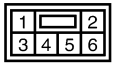

Terminal No.	Color of Wire	Signal Name [Specification]
1	O	–
2	B	–

Connector No.	B216
Connector Name	WIRE TO WIRE
Connector Type	NS16MBR-CS

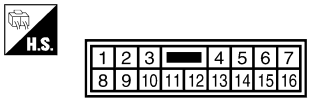

Terminal No.	Color of Wire	Signal Name [Specification]
10	O	–

Connector No.	B431
Connector Name	WIRE TO WIRE
Connector Type	NS06MW-CS

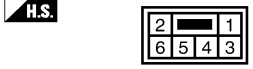

Terminal No.	Color of Wire	Signal Name [Specification]
1	R	–
2	B	–

Connector No.	B434
Connector Name	POWER SEAT SWITCH (PASSENGER SIDE)
Connector Type	NS10FW-CS

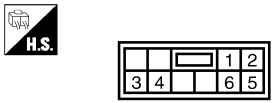

Terminal No.	Color of Wire	Signal Name [Specification]
1	R	–
2	B	–
3	G	–
4	G/R	–
5	V	–
6	R/L	–

Connector No.	B435
Connector Name	RECLINING MOTOR (PASSENGER SIDE)
Connector Type	F 6098-0239

Terminal No.	Color of Wire	Signal Name [Specification]
5	V	–
6	R/L	–

Connector No.	B436
Connector Name	SLIDING MOTOR (PASSENGER SIDE)
Connector Type	F 6098-0344

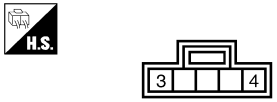

Terminal No.	Color of Wire	Signal Name [Specification]
3	G	–
4	G/R	–

Connector No.	E105
Connector Name	WIRE TO WIRE
Connector Type	TH70MW-CS10-M3

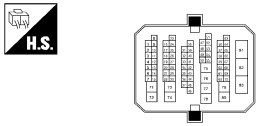

Terminal No.	Color of Wire	Signal Name [Specification]
82	LG	–

Connector No.	M1
Connector Name	FUSE BLOCK (J/B)
Connector Type	NS06FW-M2

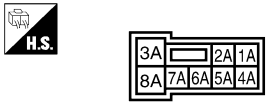

Terminal No.	Color of Wire	Signal Name [Specification]
7A	LG	–

JCJWM0683GE

POWER SEAT FOR PASSENGER SIDE

Connector No.	M11
Connector Name	WIRE TO WIRE
Connector Type	TH70FW-CS10-M3

H.S.

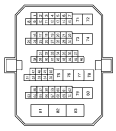

Terminal No.	Color of Wire	Signal Name [Specification]
82	W	–

Connector No.	M70
Connector Name	WIRE TO WIRE
Connector Type	NS16FBR-CS

H.S.

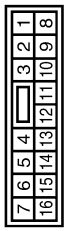

Terminal No.	Color of Wire	Signal Name [Specification]
10	GR	–

Connector No.	M118
Connector Name	BCM (BODY CONTROL MODULE)
Connector Type	M03FB-LC

H.S.

Terminal No.	Color of Wire	Signal Name [Specification]
1	W	BAT (F/L)
2	GR	POWER WINDOW POWER SUPPLY (BAT)

Connector No.	M119
Connector Name	BCM (BODY CONTROL MODULE)
Connector Type	NS16FW-CS

H.S.

Terminal No.	Color of Wire	Signal Name [Specification]
11	LG	BAT (FUSE)
13	B	GND

JCJWM0684GE

HEATED SEAT

Wiring Diagram - HEATED SEAT (FRONT) -

INFOID:0000000003397018

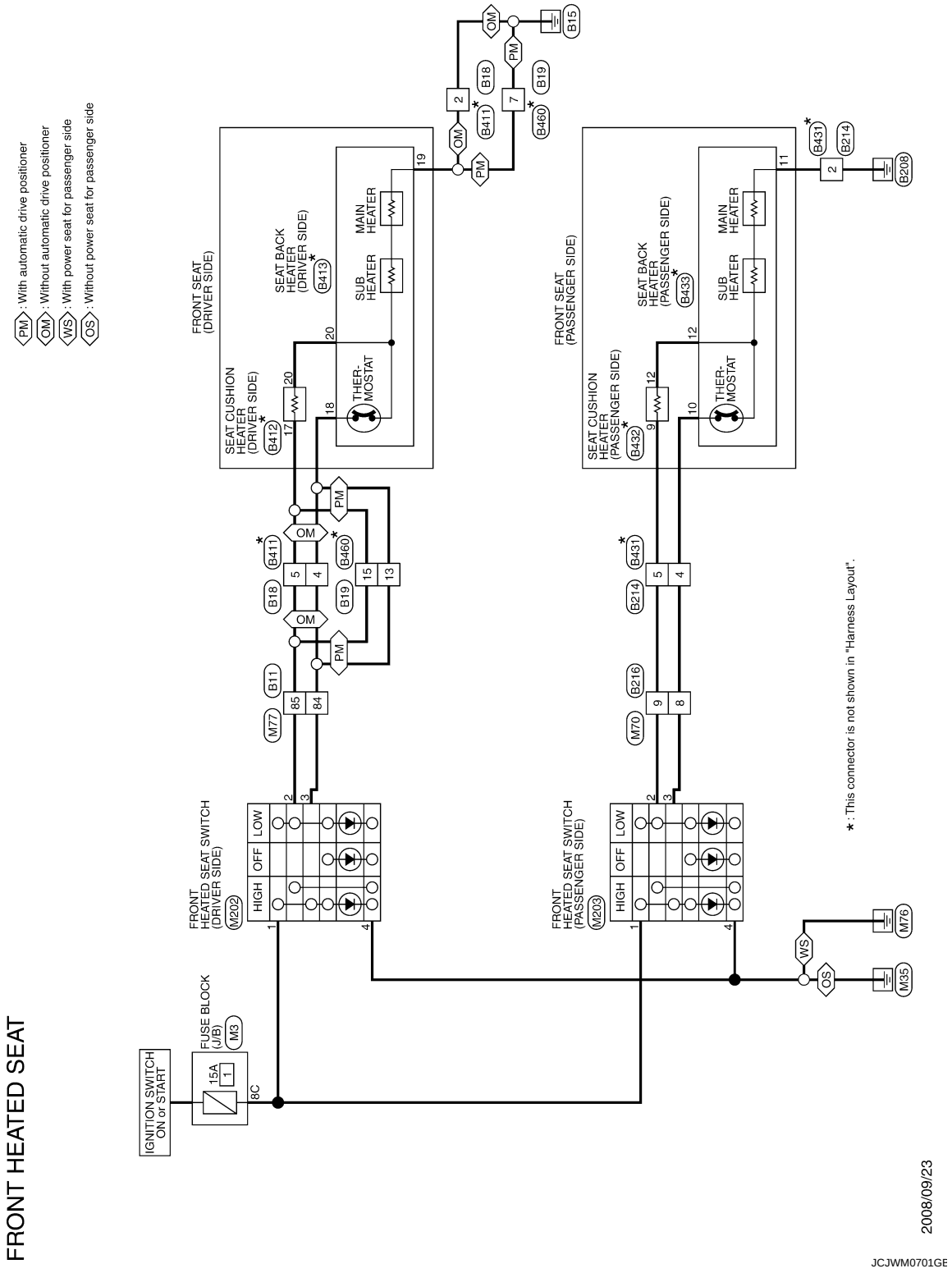

FRONT HEATED SEAT

Connector No.	B11
Connector Name	WIRE TO WIRE
Connector Type	TH80MW-CS19

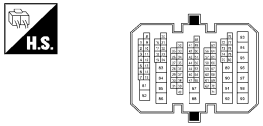

Terminal No.	Color of Wire	Signal Name [Specification]
84	O	–
85	G	–

Connector No.	B18
Connector Name	WIRE TO WIRE
Connector Type	NS06FW-CS

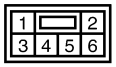

Terminal No.	Color of Wire	Signal Name [Specification]
2	B	–
4	O	–
5	G	–

Connector No.	B19
Connector Name	WIRE TO WIRE
Connector Type	NS16FW-CS

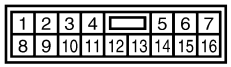

Terminal No.	Color of Wire	Signal Name [Specification]
7	B	–
13	O	–
15	G	–

Connector No.	B214
Connector Name	WIRE TO WIRE
Connector Type	NS06FW-CS

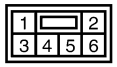

Terminal No.	Color of Wire	Signal Name [Specification]
2	B	–
4	GR	–
5	G	–

Connector No.	B216
Connector Name	WIRE TO WIRE
Connector Type	NS16MBR-CS

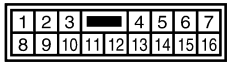

Terminal No.	Color of Wire	Signal Name [Specification]
8	GR	–
9	G	–

Connector No.	B411
Connector Name	WIRE TO WIRE
Connector Type	NS06MW-CS

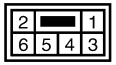

Terminal No.	Color of Wire	Signal Name [Specification]
2	B	–
4	GR	–
5	B/R	–

Connector No.	B412
Connector Name	SEAT CUSHION HEATER (DRIVER SIDE)
Connector Type	NS02MW-CS

Terminal No.	Color of Wire	Signal Name [Specification]
17	B/R	–
20	W	–

Connector No.	B413
Connector Name	SEAT BACK HEATER (DRIVER SIDE)
Connector Type	NS03FW-CS

Terminal No.	Color of Wire	Signal Name [Specification]
18	W/R	–
19	R/B	–
20	W	–

JCJWM0702GE

FRONT HEATED SEAT

Connector No.	B431
Connector Name	WIRE TO WIRE
Connector Type	NS06MW-CS

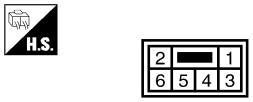

Terminal No.	Color of Wire	Signal Name [Specification]
2	B	–
4	W/R	–
5	B/R	–

Connector No.	B432
Connector Name	SEAT CUSHION HEATER (PASSENGER SIDE)
Connector Type	NS02MW-CS

Terminal No.	Color of Wire	Signal Name [Specification]
9	B/R	–
12	W	–

Connector No.	B433
Connector Name	SEAT BACK HEATER (PASSENGER SIDE)
Connector Type	NS03FW-CS

Terminal No.	Color of Wire	Signal Name [Specification]
10	W/R	–
11	R/B	–
12	W	–

Connector No.	B460
Connector Name	WIRE TO WIRE
Connector Type	NS16MW-CS

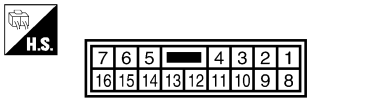

Terminal No.	Color of Wire	Signal Name [Specification]
7	B	–
13	W/R	–
15	B/R	–

Connector No.	M3
Connector Name	FUSE BLOCK (J/B)
Connector Type	NS12FW-CS

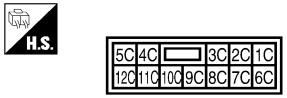

Terminal No.	Color of Wire	Signal Name [Specification]
8C	G	–

Connector No.	M70
Connector Name	WIRE TO WIRE
Connector Type	NS16FBR-CS

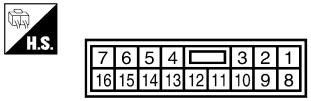

Terminal No.	Color of Wire	Signal Name [Specification]
8	V	–
9	L	–

Connector No.	M77
Connector Name	WIRE TO WIRE
Connector Type	TH80FW-CS19

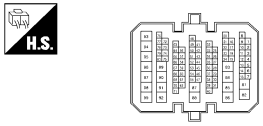

Terminal No.	Color of Wire	Signal Name [Specification]
84	R	–
85	R	–[With front heated seat and passenger side power seat Type A]
85	V	–[With front heated seat and passenger side power seat Type B]
85	GR	–[With front heated seat without passenger side power seat]

Connector No.	M202
Connector Name	FRONT HEATED SEAT SWITCH (DRIVER SIDE)
Connector Type	NS06FW-CS

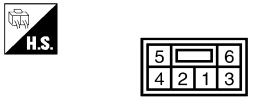

Terminal No.	Color of Wire	Signal Name [Specification]
1	G	–
2	R	–[With front heated seat and passenger side power seat Type A]
2	V	–[With front heated seat and passenger side power seat Type B]
2	GR	–[With front heated seat without passenger side power seat]
3	R	–
4	B	–

JCJWM0703GE

FRONT HEATED SEAT

Connector No.	M203
Connector Name	FRONT HEATED SEAT SWITCH (PASSENGER SIDE)
Connector Type	NS06FBR-CS

Terminal No.	Color of Wire	Signal Name [Specification]
1	G	–
2	L	–
3	V	–
4	B	–

JCJWM0704GE

Wiring Diagram - HEATED SEAT (REAR) -

INFOID:0000000003397019

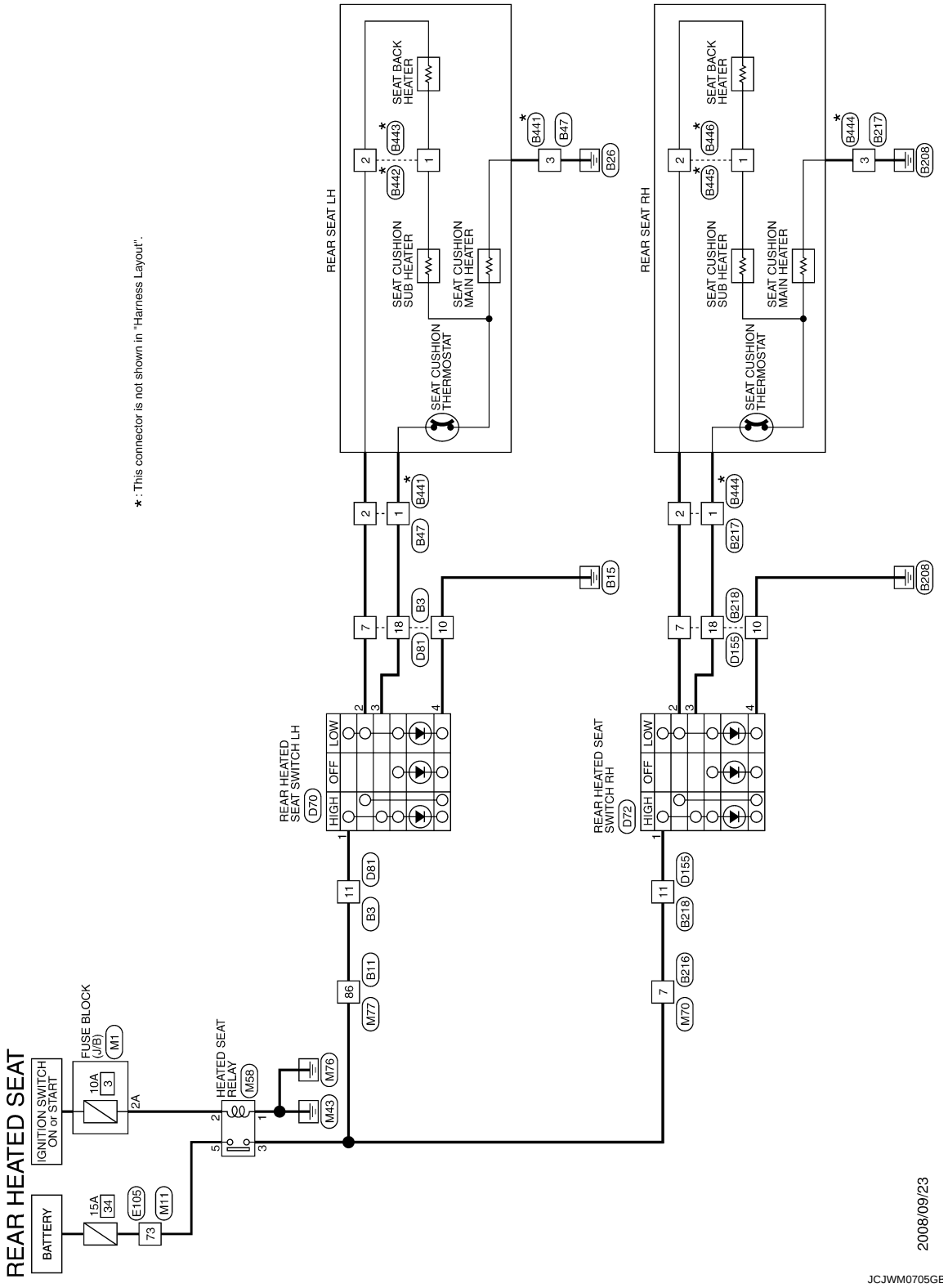

REAR HEATED SEAT

Connector No.	B3
Connector Name	WIRE TO WIRE
Connector Type	TK10FW-NS8

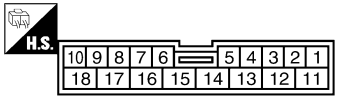

Terminal No.	Color of Wire	Signal Name [Specification]
7	LG	–
10	B	–
11	SB	–
18	Y	–

Connector No.	B11
Connector Name	WIRE TO WIRE
Connector Type	TH80MW-CS19

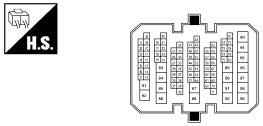

Terminal No.	Color of Wire	Signal Name [Specification]
86	SB	–

Connector No.	B47
Connector Name	WIRE TO WIRE
Connector Type	NS03FW-CS

Terminal No.	Color of Wire	Signal Name [Specification]
1	Y	–
2	LG	–
3	B	–

Connector No.	B216
Connector Name	WIRE TO WIRE
Connector Type	NS16MBR-CS

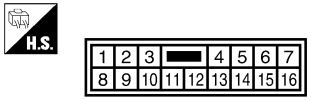

Terminal No.	Color of Wire	Signal Name [Specification]
7	Y	–

Connector No.	B217
Connector Name	WIRE TO WIRE
Connector Type	NS03FW-CS

Terminal No.	Color of Wire	Signal Name [Specification]
1	GR	–
2	O	–
3	B	–

Connector No.	B218
Connector Name	WIRE TO WIRE
Connector Type	TK10FW-NS8

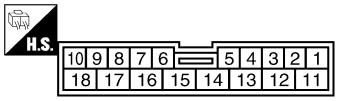

Terminal No.	Color of Wire	Signal Name [Specification]
7	O	–
10	B	–
11	Y	–
18	GR	–

Connector No.	B441
Connector Name	WIRE TO WIRE
Connector Type	NS03MW-CS

Terminal No.	Color of Wire	Signal Name [Specification]
1	Y	–
2	B	–
3	W	–

Connector No.	B442
Connector Name	WIRE TO WIRE
Connector Type	NS02MW-CS

Terminal No.	Color of Wire	Signal Name [Specification]
1	R	–
2	B	–

JCJWM0706GE

REAR HEATED SEAT

Connector No.	B443
Connector Name	WIRE TO WIRE
Connector Type	NS02FW-CS

Terminal No.	Color of Wire	Signal Name [Specification]
1	R	–
2	B	–

Connector No.	B444
Connector Name	WIRE TO WIRE
Connector Type	NS03MW-CS

Terminal No.	Color of Wire	Signal Name [Specification]
1	Y	–
2	B	–
3	W	–

Connector No.	B445
Connector Name	WIRE TO WIRE
Connector Type	NS02MW-CS

Terminal No.	Color of Wire	Signal Name [Specification]
1	R	–
2	B	–

Connector No.	B446
Connector Name	WIRE TO WIRE
Connector Type	NS02FW-CS

Terminal No.	Color of Wire	Signal Name [Specification]
1	R	–
2	B	–

Connector No.	D70
Connector Name	REAR HEATED SEAT SWITCH LH
Connector Type	NS06FW-CS

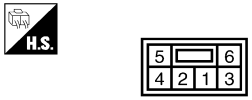

Terminal No.	Color of Wire	Signal Name [Specification]
1	Y	–
2	LG	–
3	GR	–
4	B	–

Connector No.	D72
Connector Name	REAR HEATED SEAT SWITCH RH
Connector Type	NS06FBR-CS

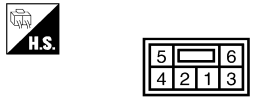

Terminal No.	Color of Wire	Signal Name [Specification]
1	Y	–
2	LG	–
3	GR	–
4	B	–

Connector No.	D81
Connector Name	WIRE TO WIRE
Connector Type	TK10MW-NS8

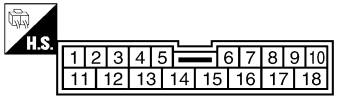

Terminal No.	Color of Wire	Signal Name [Specification]
7	LG	–
10	B	–
11	Y	–
18	GR	–

Connector No.	D155
Connector Name	WIRE TO WIRE
Connector Type	TK10MW-NS8

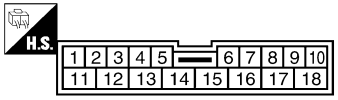

Terminal No.	Color of Wire	Signal Name [Specification]
7	LG	–
10	B	–
11	Y	–
18	GR	–

JCJWM0707GE

REAR HEATED SEAT

Connector No.	E105
Connector Name	WIRE TO WIRE
Connector Type	TH70MW-CS10-M3

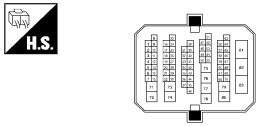

Terminal No.	Color of Wire	Signal Name [Specification]
73	L	–

Connector No.	M1
Connector Name	FUSE BLOCK (J/B)
Connector Type	NS06FW-M2

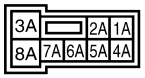

Terminal No.	Color of Wire	Signal Name [Specification]
2A	G	–

Connector No.	M11
Connector Name	WIRE TO WIRE
Connector Type	TH70FW-CS10-M3

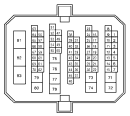

Terminal No.	Color of Wire	Signal Name [Specification]
73	L	–

Connector No.	M58
Connector Name	HEATED SEAT RELAY
Connector Type	MS02FL-M2-LC

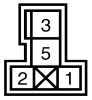

Terminal No.	Color of Wire	Signal Name [Specification]
1	B	–
2	G	–
3	W	–
5	L	–

Connector No.	M70
Connector Name	WIRE TO WIRE
Connector Type	NS16FBR-CS

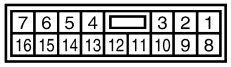

Terminal No.	Color of Wire	Signal Name [Specification]
7	W	–

Connector No.	M77
Connector Name	WIRE TO WIRE
Connector Type	TH80FW-CS19

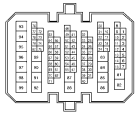

Terminal No.	Color of Wire	Signal Name [Specification]
86	W	–

JCJWM0708GE

LUMBAR SUPPORT

Wiring Diagram - LUMBAR SUPPORT -

INFOID:0000000003566105

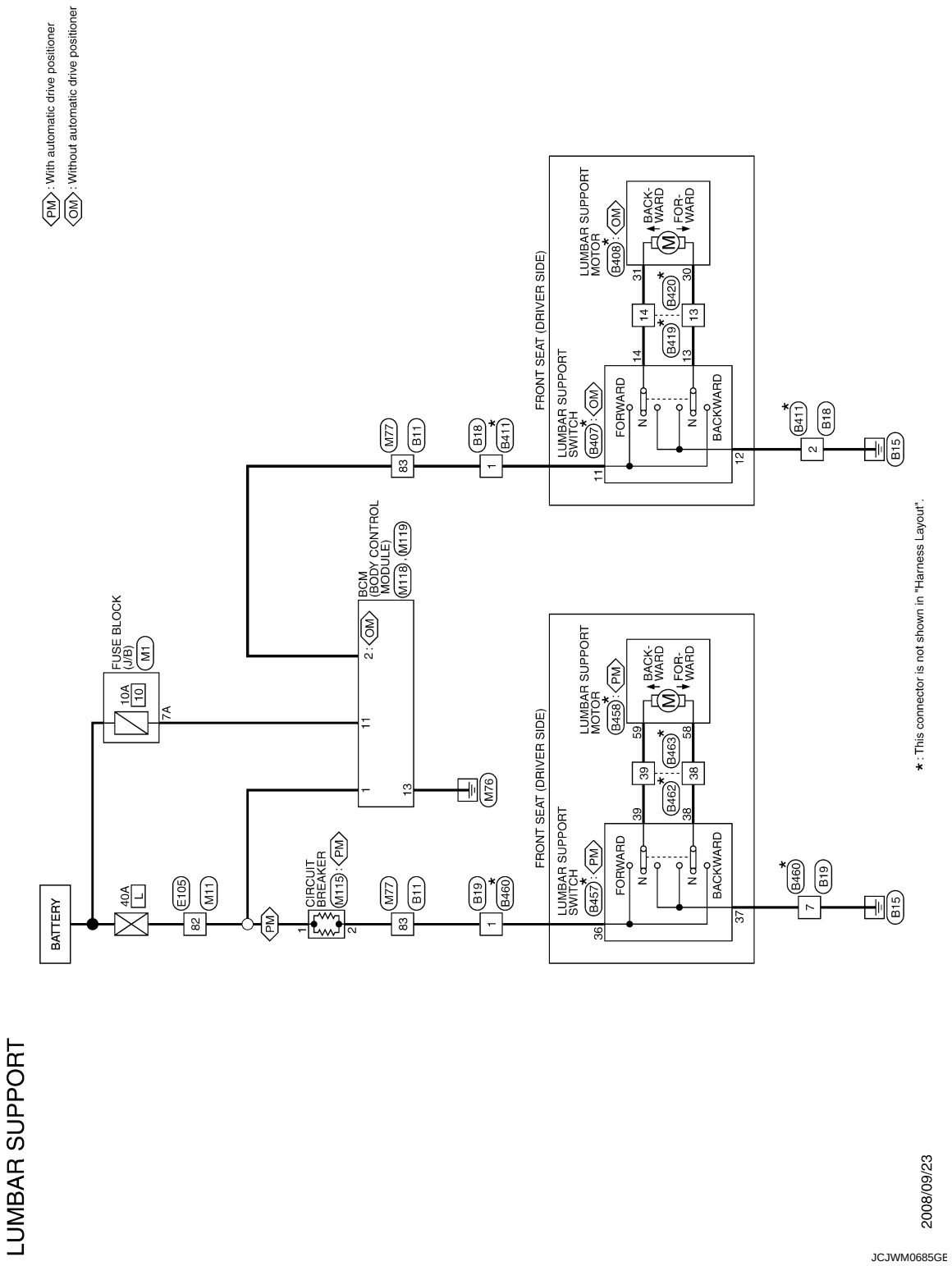

LUMBAR SUPPORT

2008/09/23

JCJWM0685GE

LUMBAR SUPPORT

Connector No.	B11
Connector Name	WIRE TO WIRE
Connector Type	TH80MW-CS19

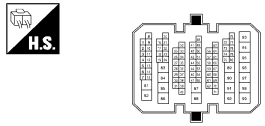

Terminal No.	Color of Wire	Signal Name [Specification]
83	BR	–

Connector No.	B18
Connector Name	WIRE TO WIRE
Connector Type	NS06FW-CS

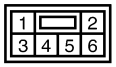

Terminal No.	Color of Wire	Signal Name [Specification]
1	BR	–
2	B	–

Connector No.	B19
Connector Name	WIRE TO WIRE
Connector Type	NS16FW-CS

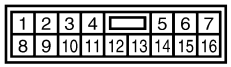

Terminal No.	Color of Wire	Signal Name [Specification]
1	BR	–
7	B	–

Connector No.	B407
Connector Name	LUMBAR SUPPORT SWITCH
Connector Type	NS04FBR-CS

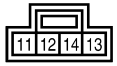

Terminal No.	Color of Wire	Signal Name [Specification]
11	O	–
12	LG	–
13	Y/W	–
14	Y	–

Connector No.	B408
Connector Name	LUMBAR SUPPORT MOTOR
Connector Type	YAZAKI 7283-1020

Terminal No.	Color of Wire	Signal Name [Specification]
30	Y/W	–
31	Y	–

Connector No.	B411
Connector Name	WIRE TO WIRE
Connector Type	NS06MW-CS

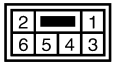

Terminal No.	Color of Wire	Signal Name [Specification]
1	R	–
2	B	–

Connector No.	B419
Connector Name	WIRE TO WIRE
Connector Type	NS10MW-CS

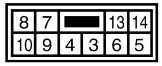

Terminal No.	Color of Wire	Signal Name [Specification]
13	Y/W	–
14	Y	–

Connector No.	B420
Connector Name	WIRE TO WIRE
Connector Type	NS10FW-CS

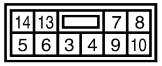

Terminal No.	Color of Wire	Signal Name [Specification]
13	Y/W	–
14	Y	–

JCJWM0686GE

LUMBAR SUPPORT

Connector No.	B457
Connector Name	LUMBAR SUPPORT SWITCH
Connector Type	NS04FBR-CS

H.S.

Terminal No.	Color of Wire	Signal Name [Specification]
36	O	–
37	LG	–
38	Y/W	–
39	Y	–

Connector No.	B458
Connector Name	LUMBAR SUPPORT MOTOR
Connector Type	YAZAKI 7283-1020

H.S.

Terminal No.	Color of Wire	Signal Name [Specification]
58	Y/W	–
59	Y	–

Connector No.	B460
Connector Name	WIRE TO WIRE
Connector Type	NS16MW-CS

H.S.

Terminal No.	Color of Wire	Signal Name [Specification]
1	R	–
7	B	–

Connector No.	B462
Connector Name	WIRE TO WIRE
Connector Type	NS10MW-CS

H.S.

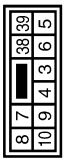

Terminal No.	Color of Wire	Signal Name [Specification]
38	Y/W	–
39	Y	–

Connector No.	B463
Connector Name	WIRE TO WIRE
Connector Type	NS10FW-CS

H.S.

Terminal No.	Color of Wire	Signal Name [Specification]
38	Y/W	–
39	Y	–

Connector No.	E105
Connector Name	WIRE TO WIRE
Connector Type	TH70MW-CS10-M3

H.S.

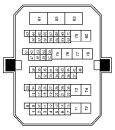

Terminal No.	Color of Wire	Signal Name [Specification]
82	LG	–

Connector No.	M1
Connector Name	FUSE BLOCK (J/B)
Connector Type	NS06FW-M2

H.S.

Terminal No.	Color of Wire	Signal Name [Specification]
7A	LG	–

Connector No.	M11
Connector Name	WIRE TO WIRE
Connector Type	TH70FW-CS10-M3

H.S.

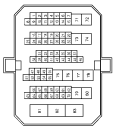

Terminal No.	Color of Wire	Signal Name [Specification]
82	W	–

JCJWM0687GE

LUMBAR SUPPORT

Connector No.	M77
Connector Name	WIRE TO WIRE
Connector Type	TH80FW-CS19

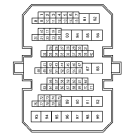

Terminal No.	Color of Wire	Signal Name [Specification]
83	W	–[With automatic drive positioner]
83	GR	–[With driver side power seat]

Connector No.	M115
Connector Name	CIRCUIT BREAKER
Connector Type	M02FW-P-LC

Terminal No.	Color of Wire	Signal Name [Specification]
1	W	–
2	W	–

Connector No.	M118
Connector Name	BCM (BODY CONTROL MODULE)
Connector Type	M03FB-LC

Terminal No.	Color of Wire	Signal Name [Specification]
1	W	BAT (F/L)
2	GR	POWER WINDOW POWER SUPPLY (BAT)

Connector No.	M119
Connector Name	BCM (BODY CONTROL MODULE)
Connector Type	NS16FW-CS

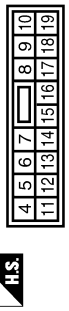

Terminal No.	Color of Wire	Signal Name [Specification]
11	LG	BAT (FUSE)
13	B	GND

JCJWM0688GE

ECU DIAGNOSIS

REAR SEATBACK POWER RETURN CONTROL UNIT

Reference Value

INFOID:0000000003396957

TERMINAL LAYOUT

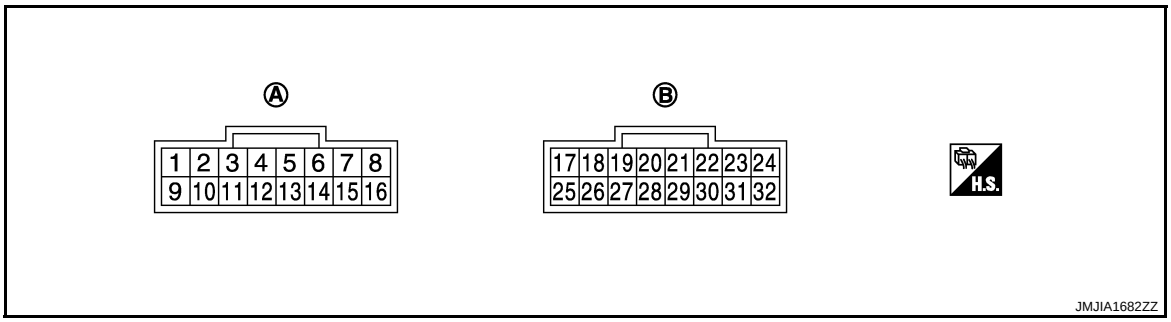

A. B492 B. B493

PHYSICAL VALUES

Rear seat back power return control unit

Terminal No.		Wire color	Description		Condition	Value (Approx.)
+	–		Signal name	Input/ Output		
1	Ground	B/W	Ground (Motor sensor RH)	—	—	0
2	Ground	G/W	Motor sensor (RH) input signal	Input	When the power return motor (RH) is operated	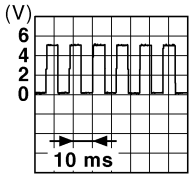 JMKIA0070GB
					When the pinch occurs	The above pulse width should be expanded
3	Ground	Y/R	Motor sensor (RH) Power supply	Input	When the power return motor is operated	Battery voltage
5	Ground	R/B	Power return motor (LH) backward signal	Output	When the power return motor (LH) performs reverse operation	Battery voltage
					Other than the above	0
6	Ground	L	Power return motor (LH) forward signal	Output	When the power return motor (LH) performs return operation	Battery voltage
					Other than the above	0
7	Ground	R/W	Power return motor (RH) backward signal	Output	When the power return motor (RH) performs reverse operation	Battery voltage
					Other than the above	0
8	Ground	L/W	Power return motor (RH) forward signal	Output	When the power return motor (RH) performs return operation	Battery voltage
					Other than the above	0

Terminal No.		Wire color	Description		Condition	Value (Approx.)
+	–		Signal name	Input/ Output		
9	Ground	B/Y	Ground (Motor sensor LH)	—	—	0
10	Ground	G	Motor sensor (LH) input signal	Input	When the power return motor (LH) is operated	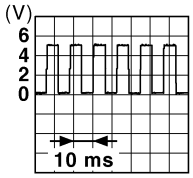 JMKIA0070GB
					When the pinch occurs	The above pulse width should be expanded
11	Ground	Y	Motor sensor (LH) Power supply	Input	When the power return motor is operated	Battery voltage
13	Ground	B	Ground (power)	—	—	0
16	Ground	R	Battery power supply (power)	Input	—	Battery voltage
17	Ground	R	Battery power supply (system)	Input	—	Battery voltage
20	Ground	LG	Power return switch (RH) input signal	Input	When pressing the power return switch (RH)	0
					Other than the above	5
21	Ground	W	Primary position limit switch (LH) input signal	Input	When the sector gear (LH) is in the initial position (other than low power consumption mode)	Battery voltage
					Other than the above	0
22	Ground	W/R	Primary position limit switch (RH) input signal	Input	When the sector gear (RH) is in the initial position (other than low power consumption mode)	Battery voltage
					Other than the above	0
23	Ground	BR/W	Ground (limit switch RH)	—	—	0
24	Ground	LG	Vehicle speed signal (8-pulse)	Input	When vehicle speed is approx.40 km/h (25MPH)	**NOTE:** Maximum voltage may be 12 V due to specifications (connected units) 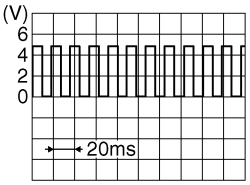 SKIA6649J
28	Ground	LG/Y	Power return switch (LH) input signal	Input	When pressing the power return switch (LH)	0
					Other than the above	5

Terminal No.		Wire color	Description		Condition	Value (Approx.)
+	–		Signal name	Input/ Output		
29	Ground	L	Return complete limit switch (LH) input signal	Input	When the rear seatback (LH) is in the return completion position (other than low power consumption mode)	Battery voltage
					Other than the above	0
30	Ground	L/W	Return complete limit switch (RH) input signal	Input	When the rear seatback (RH) is in the return completion position (other than low power consumption mode)	Battery voltage
					Other than the above	0
31	Ground	BR	Ground (limit switch LH)	—	—	0
32	Ground	B	Ground (system)	—	—	0

Wiring Diagram - REAR SEATBACK POWER RETURN SYSTEM -

INFOID:0000000003396958

NOTE:

- Type A UP to VIN: JN8AZ18U*9W100000, JN8AZ18W*9W200000 (EXCEPT FOR MEXICO), JN8AZ18U*9W710000, JN8AZ18W*9W810000 (FOR MEXICO)

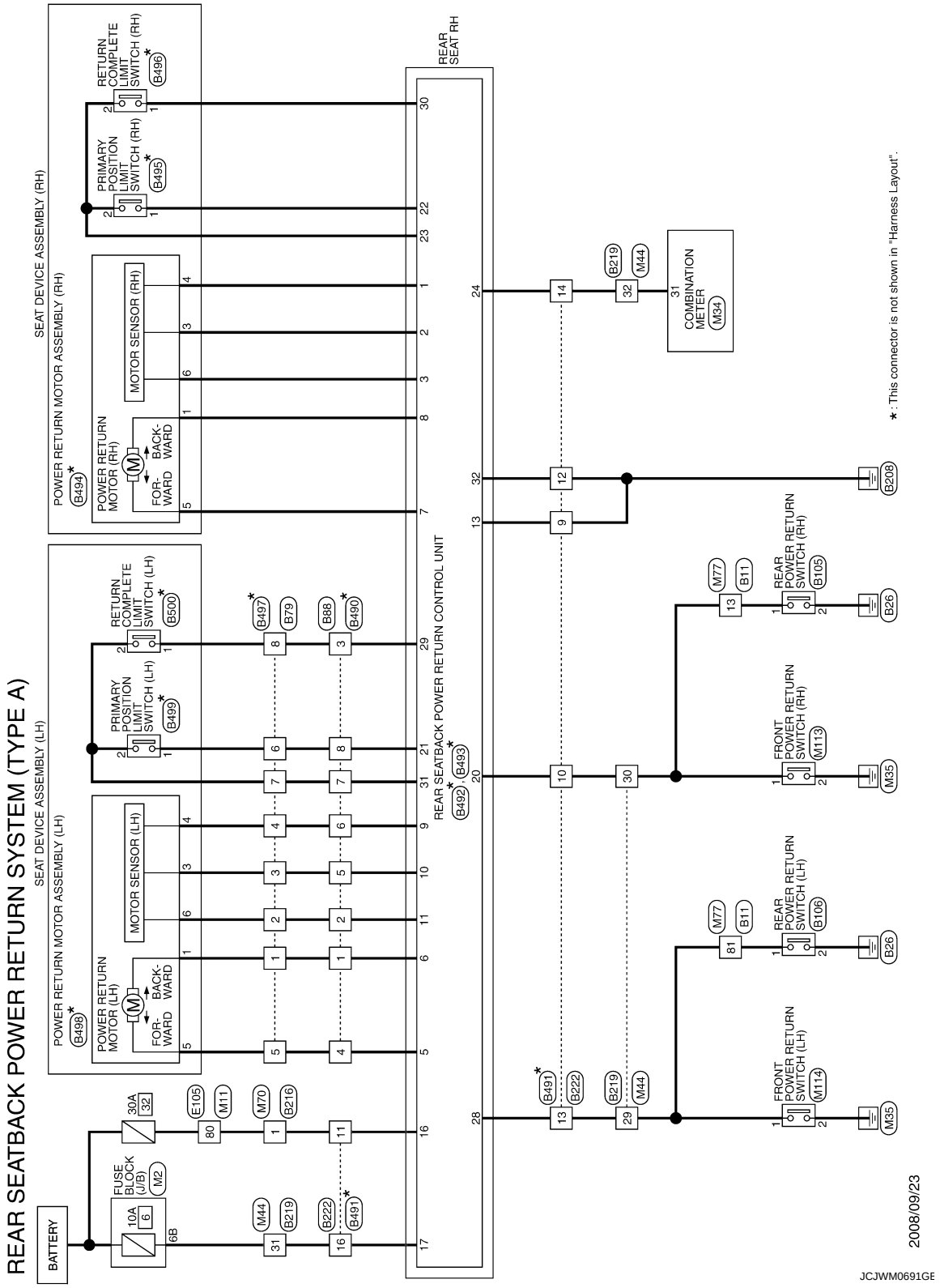

REAR SEATBACK POWER RETURN SYSTEM (TYPE A)

Connector No.	B11
Connector Name	WIRE TO WIRE
Connector Type	TH80MW-CS19

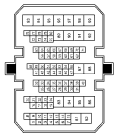

Terminal No.	Color of Wire	Signal Name [Specification]
13	L	–
81	R	–

Connector No.	B79
Connector Name	WIRE TO WIRE
Connector Type	NS08FW-CS

Terminal No.	Color of Wire	Signal Name [Specification]
1	BR	–
2	L	–
3	O	–
4	Y	–
5	W	–
6	V	–
7	R	–
8	LG	–

Connector No.	B88
Connector Name	WIRE TO WIRE
Connector Type	NS08FW-CS

Terminal No.	Color of Wire	Signal Name [Specification]
1	BR	–
2	L	–
3	LG	–
4	W	–
5	O	–
6	Y	–
7	R	–
8	V	–

Connector No.	B105
Connector Name	REAR POWER RETURN SWITCH (RH)
Connector Type	TK04FW

Terminal No.	Color of Wire	Signal Name [Specification]
1	L	–
2	B/W	–

Connector No.	B106
Connector Name	REAR POWER RETURN SWITCH (LH)
Connector Type	TK04FW

Terminal No.	Color of Wire	Signal Name [Specification]
1	R	–
2	B	–

Connector No.	B216
Connector Name	WIRE TO WIRE
Connector Type	NS16MBR-CS

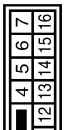

Terminal No.	Color of Wire	Signal Name [Specification]
1	G	–

Connector No.	B219
Connector Name	WIRE TO WIRE
Connector Type	TH32MW-NH

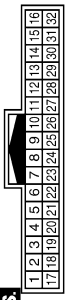

Terminal No.	Color of Wire	Signal Name [Specification]
29	G	–
30	P	–
31	V	–
32	BR	–

Connector No.	B222
Connector Name	WIRE TO WIRE
Connector Type	NS08FBR-CS

Terminal No.	Color of Wire	Signal Name [Specification]
9	B	–
10	P	–
11	G	–
12	B/W	–
13	G	–
14	BR	–
16	V	–

JCJWM0692GE

REAR SEATBACK POWER RETURN SYSTEM (TYPE A)

Connector No.	B490
Connector Name	WIRE TO WIRE
Connector Type	NS08MW-CS

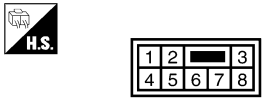

Terminal No.	Color of Wire	Signal Name [Specification]
1	L	–
2	Y	–
3	L	–
4	R/B	–
5	G	–
6	B/Y	–
7	BR	–
8	W	–

Connector No.	B491
Connector Name	WIRE TO WIRE
Connector Type	NS08MBR-CS

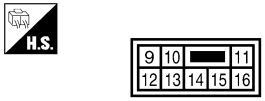

Terminal No.	Color of Wire	Signal Name [Specification]
9	B	–
10	LG/R	–
11	R	–
12	B	–
13	LG/Y	–
14	LG	–
16	R	–

Connector No.	B492
Connector Name	REAR SEATBACK POWER RETURN CONTROL UNIT
Connector Type	SEA16FW

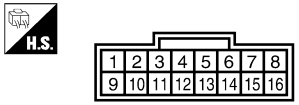

Terminal No.	Color of Wire	Signal Name [Specification]
1	B/W	MOTOR SENS GND RH
2	G/W	MOTOR SENS SIG RH
3	Y/R	MOTOR SENS PWR RH
5	R/B	MTR LH –
6	L	MTR LH +
7	R/W	MTR RH –
8	L/W	MTR RH +
9	B/Y	MOTOR SENS GND LH
10	G	MOTOR SENS SIG LH
11	Y	MOTOR SENS PWR LH
13	B	GND POWER
16	R	BAT POWER

Connector No.	B493
Connector Name	REAR SEATBACK POWER RETURN CONTROL UNIT
Connector Type	YAA16FW

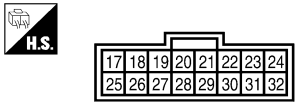

Terminal No.	Color of Wire	Signal Name [Specification]
17	R	BAT SIG
20	LG	RH SW
21	W	PRIMAL SW LH
22	W/R	PRIMAL SW RH
23	BR/W	RH LIMIT SW GND
24	LG	SPEED 8PR
28	LG/Y	LH SW
29	L	RETURN SW LH
30	L/W	RETURN SW RH
31	BR	LH LIMIT SW GND
32	B	GND SIG

Connector No.	B494
Connector Name	POWER RETURN MOTOR ASSEMBLY (RH)
Connector Type	SUMITOMO:6098-0245

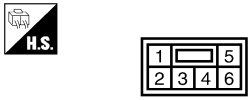

Terminal No.	Color of Wire	Signal Name [Specification]
1	L/W	–
3	G/W	–
4	B/W	–
5	R/W	–
6	Y/R	–

Connector No.	B495
Connector Name	PRIMARY POSITION LIMIT SWITCH (RH)
Connector Type	YAZAKI:7283-5972

Terminal No.	Color of Wire	Signal Name [Specification]
1	W/R	–
2	BR/W	–

Connector No.	B496
Connector Name	RETURN COMPLETE LIMIT SWITCH (RH)
Connector Type	SUMITOMO:6098-0239

Terminal No.	Color of Wire	Signal Name [Specification]
1	L/W	–
2	BR/W	–

JCJWM0693GE

REAR SEATBACK POWER RETURN SYSTEM (TYPE A)

Connector No.	B497
Connector Name	WIRE TO WIRE
Connector Type	NS08MW-CS

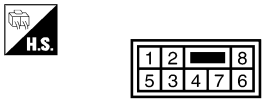

Terminal No.	Color of Wire	Signal Name [Specification]
1	L	–
2	Y	–
3	G	–
4	B	–
5	R	–
6	W	–
7	BR	–
8	L	–

Connector No.	B498
Connector Name	POWER RETURN MOTOR ASSEMBLY (LH)
Connector Type	SUMITOMO:6098-0245

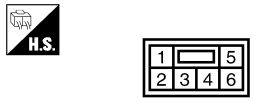

Terminal No.	Color of Wire	Signal Name [Specification]
1	L	–
3	G	–
4	B	–
5	R	–
6	Y	–

Connector No.	B499
Connector Name	PRIMARY POSITION LIMIT SWITCH (LH)
Connector Type	YAZAKI:7283-5972

Terminal No.	Color of Wire	Signal Name [Specification]
1	W	–
2	BR	–

Connector No.	B500
Connector Name	RETURN COMPLETE LIMIT SWITCH (LH)
Connector Type	SUMITOMO:6098-0239

Terminal No.	Color of Wire	Signal Name [Specification]
1	L	–
2	BR	–

Connector No.	E105
Connector Name	WIRE TO WIRE
Connector Type	TH70MW-CS10-M3

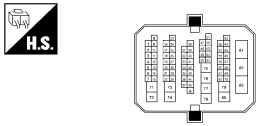

Terminal No.	Color of Wire	Signal Name [Specification]
80	R	–

Connector No.	M2
Connector Name	FUSE BLOCK (J/B)
Connector Type	NS10FW-CS

Terminal No.	Color of Wire	Signal Name [Specification]
6B	Y	–

Connector No.	M11
Connector Name	WIRE TO WIRE
Connector Type	TH70FW-CS10-M3

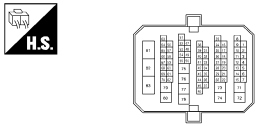

Terminal No.	Color of Wire	Signal Name [Specification]
80	R	–

Connector No.	M34
Connector Name	COMBINATION METER
Connector Type	TH40FW-NH

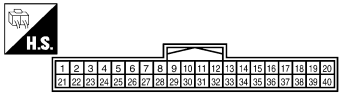

Terminal No.	Color of Wire	Signal Name [Specification]
31	V	VEHICLE SPEED (8-PULSE)

JCJWM0694GE

REAR SEATBACK POWER RETURN SYSTEM (TYPE A)

Connector No.	M44
Connector Name	WIRE TO WIRE
Connector Type	TH32FW-NH

H.S.

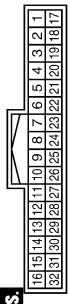

Terminal No.	Color of Wire	Signal Name [Specification]
29	LG	–
30	O	–
31	Y	–
32	V	–

Connector No.	M70
Connector Name	WIRE TO WIRE
Connector Type	NS16FBR-CS

H.S.

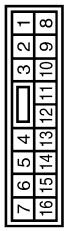

Terminal No.	Color of Wire	Signal Name [Specification]
1	R	–

Connector No.	M77
Connector Name	WIRE TO WIRE
Connector Type	TH80FW-CS19

H.S.

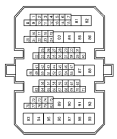

Terminal No.	Color of Wire	Signal Name [Specification]
13	O	–
81	LG	–

Connector No.	M113
Connector Name	FRONT POWER RETURN SWITCH (RH)
Connector Type	TK04FW

H.S.

Terminal No.	Color of Wire	Signal Name [Specification]
1	O	–
2	B	–

Connector No.	M114
Connector Name	FRONT POWER RETURN SWITCH (LH)
Connector Type	TK04FW

H.S.

Terminal No.	Color of Wire	Signal Name [Specification]
1	LG	–
2	B	–

JCJWM0695GE

Wiring Diagram - REAR SEATBACK POWER RETURN SYSTEM -

INFOID:0000000004747833

NOTE:

- Type B From VIN: JN8AZ18U*9W100001, JN8AZ18W*9W200001 (EXCEPT FOR MEXICO), JN8AZ18U*9W710001, JN8AZ18W*9W810001 (FOR MEXICO)

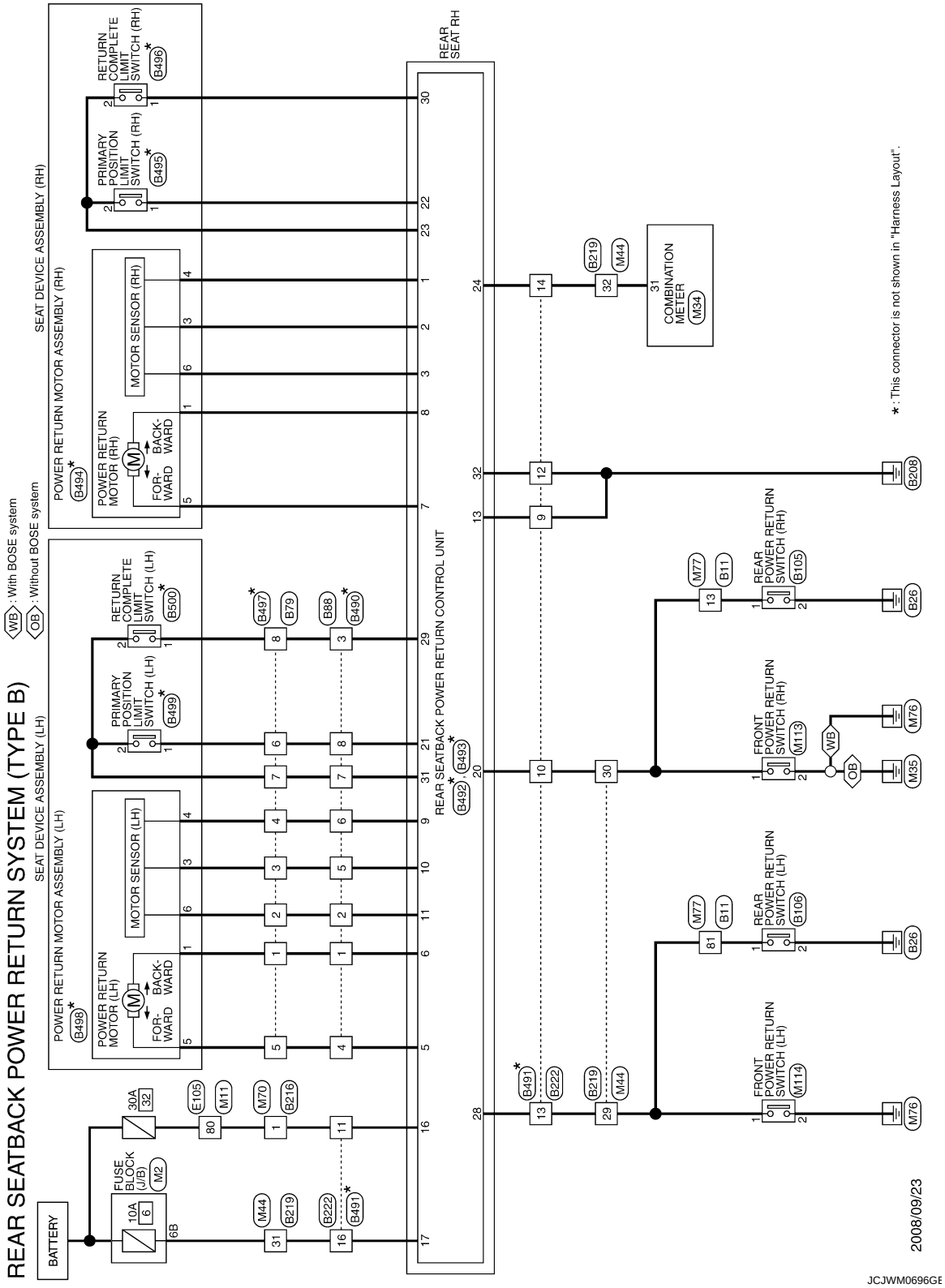

REAR SEATBACK POWER RETURN SYSTEM (TYPE B)

Connector No.	B11
Connector Name	WIRE TO WIRE
Connector Type	TH80MW-CS19

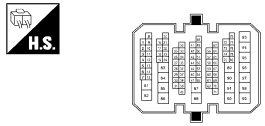

Terminal No.	Color of Wire	Signal Name [Specification]
13	L	–
81	R	–

Connector No.	B79
Connector Name	WIRE TO WIRE
Connector Type	NS08FW-CS

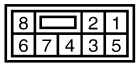

Terminal No.	Color of Wire	Signal Name [Specification]
1	BR	–
2	L	–
3	O	–
4	Y	–
5	W	–
6	V	–
7	R	–
8	LG	–

Connector No.	B88
Connector Name	WIRE TO WIRE
Connector Type	NS08FW-CS

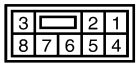

Terminal No.	Color of Wire	Signal Name [Specification]
1	BR	–
2	L	–
3	LG	–
4	W	–
5	O	–
6	Y	–
7	R	–
8	V	–

Connector No.	B105
Connector Name	REAR POWER RETURN SWITCH (RH)
Connector Type	TK04FW

Terminal No.	Color of Wire	Signal Name [Specification]
1	L	–
2	B/W	–

Connector No.	B106
Connector Name	REAR POWER RETURN SWITCH (LH)
Connector Type	TK04FW

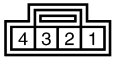

Terminal No.	Color of Wire	Signal Name [Specification]
1	R	–
2	B	–

Connector No.	B216
Connector Name	WIRE TO WIRE
Connector Type	NS16MBR-CS

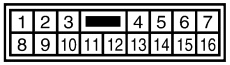

Terminal No.	Color of Wire	Signal Name [Specification]
1	G	–

Connector No.	B219
Connector Name	WIRE TO WIRE
Connector Type	TH32MW-NH

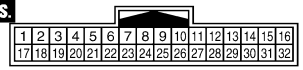

Terminal No.	Color of Wire	Signal Name [Specification]
29	G	–
30	P	–
31	V	–
32	BR	–

Connector No.	B222
Connector Name	WIRE TO WIRE
Connector Type	NS08FBR-CS

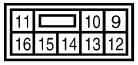

Terminal No.	Color of Wire	Signal Name [Specification]
9	B	–
10	P	–
11	G	–
12	B/W	–
13	G	–
14	BR	–
16	V	–

JCJWM0697GE

REAR SEATBACK POWER RETURN SYSTEM (TYPE B)

Connector No.	B490
Connector Name	WIRE TO WIRE
Connector Type	NS08MW-CS

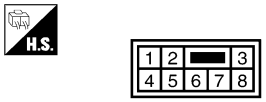

Terminal No.	Color of Wire	Signal Name [Specification]
1	L	–
2	Y	–
3	L	–
4	R/B	–
5	G	–
6	B/Y	–
7	BR	–
8	W	–

Connector No.	B491
Connector Name	WIRE TO WIRE
Connector Type	NS08MBR-CS

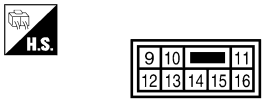

Terminal No.	Color of Wire	Signal Name [Specification]
9	B	–
10	LG/R	–
11	R	–
12	B	–
13	LG/Y	–
14	LG	–
16	R	–

Connector No.	B492
Connector Name	REAR SEATBACK POWER RETURN CONTROL UNIT
Connector Type	SEA16FW

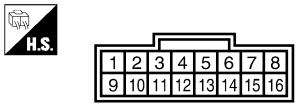

Terminal No.	Color of Wire	Signal Name [Specification]
1	B/W	MOTOR SENS GND RH
2	G/W	MOTOR SENS SIG RH
3	Y/R	MOTOR SENS PWR RH
5	R/B	MTR LH –
6	L	MTR LH +
7	R/W	MTR RH –
8	L/W	MTR RH +
9	B/Y	MOTOR SENS GND LH
10	G	MOTOR SENS SIG LH
11	Y	MOTOR SENS PWR LH
13	B	GND POWER
16	R	BAT POWER

Connector No.	B493
Connector Name	REAR SEATBACK POWER RETURN CONTROL UNIT
Connector Type	YAA16FW

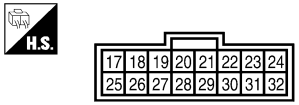

Terminal No.	Color of Wire	Signal Name [Specification]
17	R	BAT SIG
20	LG	RH SW
21	W	PRIMAL SW LH
22	W/R	PRIMAL SW RH
23	BR/W	RH LIMIT SW GND
24	LG	SPEED 8PR
28	LG/Y	LH SW
29	L	RETURN SW LH
30	L/W	RETURN SW RH
31	BR	LH LIMIT SW GND
32	B	GND SIG

Connector No.	B494
Connector Name	POWER RETURN MOTOR ASSEMBLY (RH)
Connector Type	SUMITOMO:6098-0245

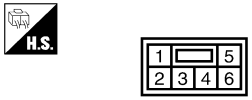

Terminal No.	Color of Wire	Signal Name [Specification]
1	L/W	–
3	G/W	–
4	B/W	–
5	R/W	–
6	Y/R	–

Connector No.	B495
Connector Name	PRIMARY POSITION LIMIT SWITCH (RH)
Connector Type	YAZAKI:7283-5972

Terminal No.	Color of Wire	Signal Name [Specification]
1	W/R	–
2	BR/W	–

Connector No.	B496
Connector Name	RETURN COMPLETE LIMIT SWITCH (RH)
Connector Type	SUMITOMO:6098-0239

Terminal No.	Color of Wire	Signal Name [Specification]
1	L/W	–
2	BR/W	–

JCJWM0698GE

REAR SEATBACK POWER RETURN SYSTEM (TYPE B)

Connector No.	B497
Connector Name	WIRE TO WIRE
Connector Type	NS08MW-CS

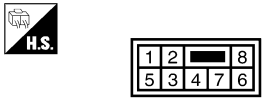

Terminal No.	Color of Wire	Signal Name [Specification]
1	L	–
2	Y	–
3	G	–
4	B	–
5	R	–
6	W	–
7	BR	–
8	L	–

Connector No.	B498
Connector Name	POWER RETURN MOTOR ASSEMBLY (LH)
Connector Type	SUMITOMO:6098-0245

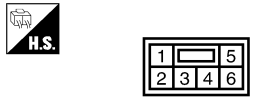

Terminal No.	Color of Wire	Signal Name [Specification]
1	L	–
3	G	–
4	B	–
5	R	–
6	Y	–

Connector No.	B499
Connector Name	PRIMARY POSITION LIMIT SWITCH (LH)
Connector Type	YAZAKI:7283-5972

Terminal No.	Color of Wire	Signal Name [Specification]
1	W	–
2	BR	–

Connector No.	B500
Connector Name	RETURN COMPLETE LIMIT SWITCH (LH)
Connector Type	SUMITOMO:6098-0239

Terminal No.	Color of Wire	Signal Name [Specification]
1	L	–
2	BR	–

Connector No.	E105
Connector Name	WIRE TO WIRE
Connector Type	TH70MW-CS10-M3

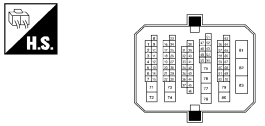

Terminal No.	Color of Wire	Signal Name [Specification]
80	R	–

Connector No.	M2
Connector Name	FUSE BLOCK (J/B)
Connector Type	NS10FW-CS

Terminal No.	Color of Wire	Signal Name [Specification]
6B	Y	–

Connector No.	M11
Connector Name	WIRE TO WIRE
Connector Type	TH70FW-CS10-M3

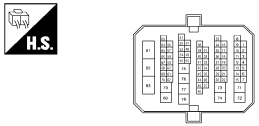

Terminal No.	Color of Wire	Signal Name [Specification]
80	R	–

Connector No.	M34
Connector Name	COMBINATION METER
Connector Type	TH40FW-NH

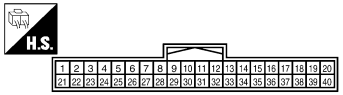

Terminal No.	Color of Wire	Signal Name [Specification]
31	V	VEHICLE SPEED (8-PULSE)

JCJWM0699GE

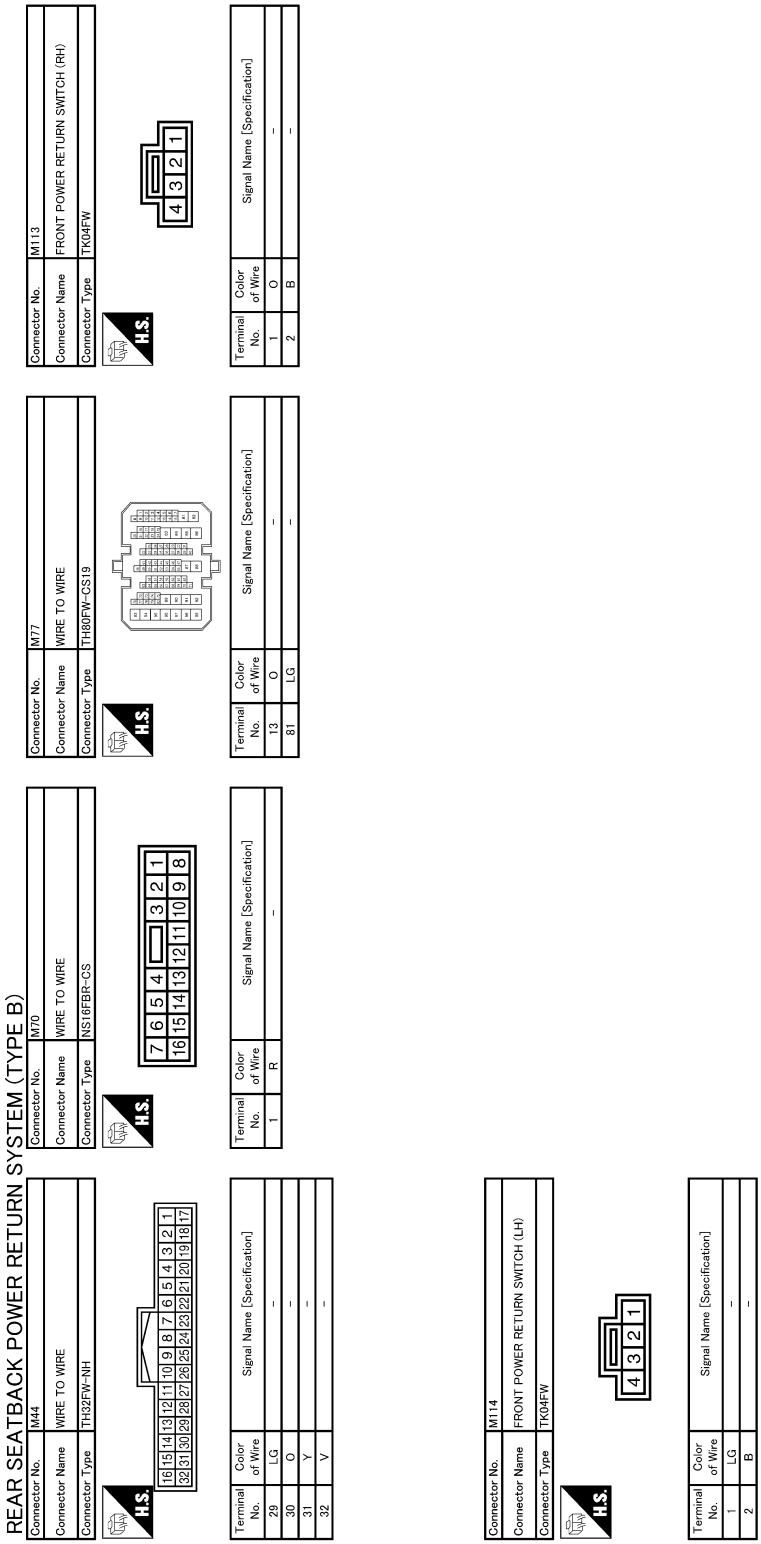

JCJWM0700GE

Fail Safe

INFOID:0000000003396959

Even if the automatic return control is inactivated, the fold-down and manual return operations can be performed

Possible location of malfunction	Diagnosis mode	Corrective action
Return complete limit switch “ON” malfunction	The return completion position cannot be detected	Detect the lock with the rear seatback power return control unit, and then reverse the power return motor
Return complete limit switch “OFF” malfunction	The automatic return cannot be performed because the return completion position is misrecognized	The manual return operation can be performed
Primary position limit switch “ON” malfunction	The initial position of the sector gear cannot be detected	Detect the lock with the rear seatback power return control unit, and then stop the power return motor * If the above condition is repeated for 4 times, stop the subsequent automatic return operation. However, the manual return operation can be performed
Primary position limit switch “OFF” malfunction	The initial position of the sector gear is misrecognized (The sector gear reverse operation cannot be performed)	• Return the sector gear to the initial position if the primary position limit switch is not turned to ON after starting the return (Lock detection) • The manual return operation can be performed
Sensor malfunction (fixed to High or Low)	The motor lock is misrecognized because the pulse does not change	• If the pulse does not change completely after starting the motor operation, return the sector gear to the initial position • The manual return operation can be performed

AUTOMATIC DRIVE POSITIONER CONTROL UNIT

Reference Value

INFOID:0000000003566251

TERMINAL LAYOUT

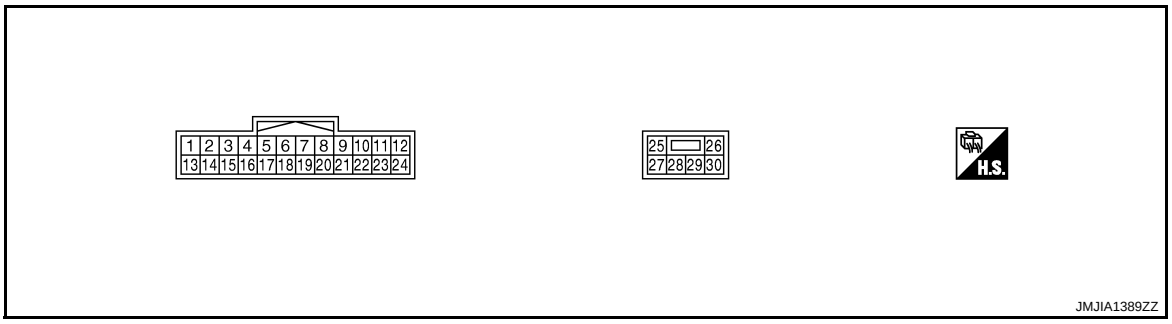

PHYSICAL VALUES

Terminal No. (wire color)		Description		Condition		Voltage (V) (Approx.)
+	-	Signal name	Input/ Output			
1 (Y)	Ground	Tilt switch upward signal	Input	Tilt switch	Operate (upward)	0
					Other than above	5
7 (P)	Ground	Telescopic switch forward signal	Input	Telescopic switch	Operate (forward)	0
					Other than above	5
13 (LG)	Ground	Tilt switch downward signal	Input	Tilt switch	Operate (downward)	0
					Other than above	5
19 (G)	Ground	Telescopic switch backward signal	Input	Telescopic switch	Operate (backward)	0
					Other than above	5
25 (W)	Ground	Power source	Input	—		Battery voltage
26 (L)	Ground	Telescopic motor backward output signal	Output	Steering telescopic	Operate (backward)	Battery voltage
					Other than above	0
28 (G)	Ground	Tilt motor downward output signal	Output	Steering tilt	Operate (downward)	Battery voltage
					Other than above	0
29 (LG)	Ground	Tilt motor upward output signal	Output	Steering tilt	Operate (upward)	Battery voltage
					Other than above	0
		Telescopic motor forward output signal		Steering telescopic	Operate (forward)	Battery voltage
					Other than above	0
30 (B)	Ground	Ground	—	—		0

Wiring Diagram - TILT & TELESCOPIC SYSTEM -

INFOID:0000000003566254

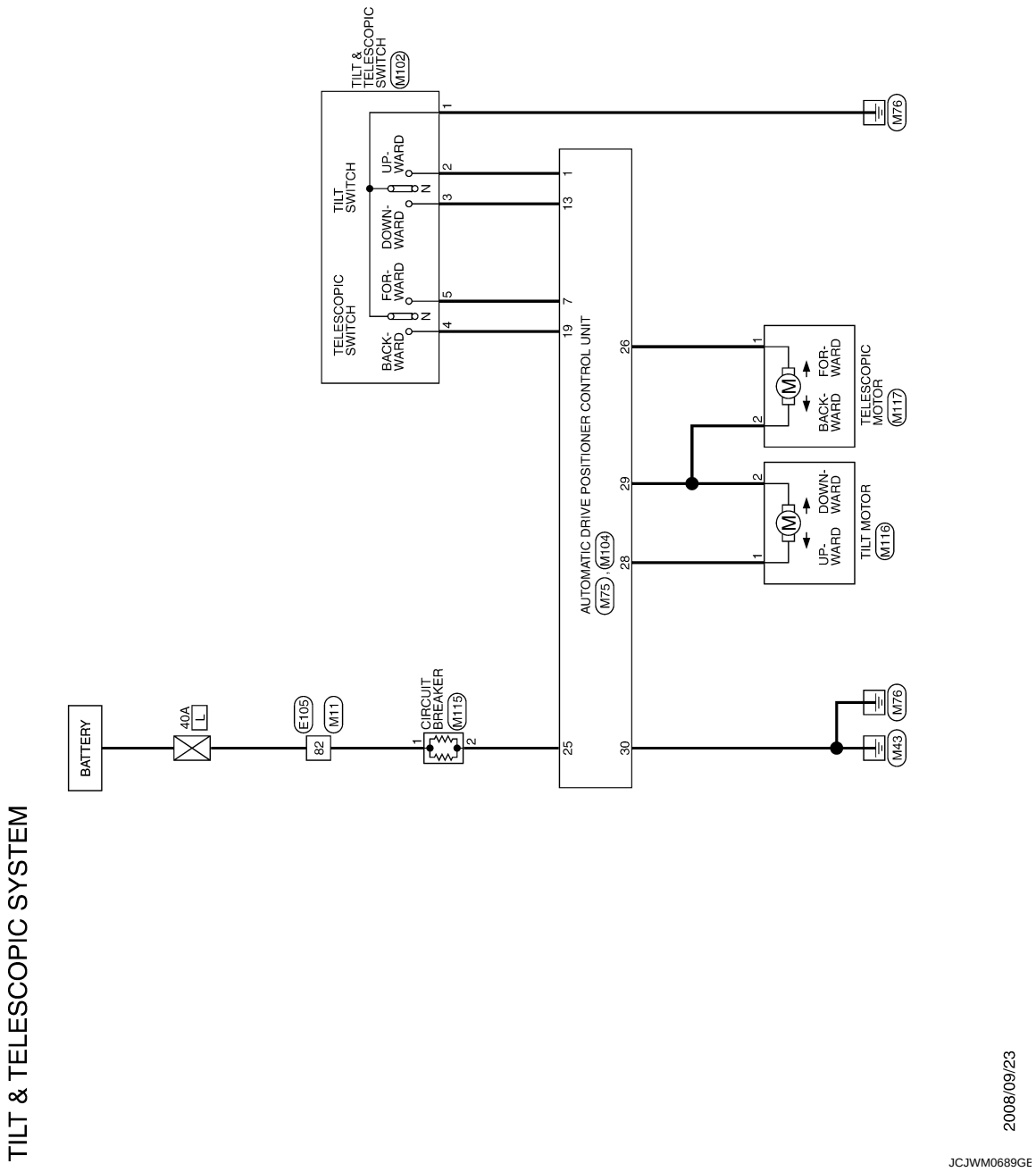

TILT & TELESCOPIC SYSTEM

Connector No.	E105
Connector Name	WIRE TO WIRE
Connector Type	TH70MW-CS10-M3

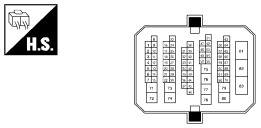

Terminal No.	Color of Wire	Signal Name [Specification]
82	LG	–

Connector No.	M11
Connector Name	WIRE TO WIRE
Connector Type	TH70FW-CS10-M3

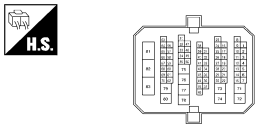

Terminal No.	Color of Wire	Signal Name [Specification]
82	W	–

Connector No.	M75
Connector Name	AUTOMATIC DRIVE POSITIONER CONTROL UNIT
Connector Type	TH24FW-NH

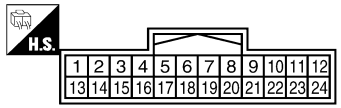

Terminal No.	Color of Wire	Signal Name [Specification]
1	Y	UPWARD
7	P	FORWARD
13	LG	DOWNWARD
19	G	BACKWARD

Connector No.	M102
Connector Name	TILT & TELESCOPIC SWITCH
Connector Type	TK06FGY

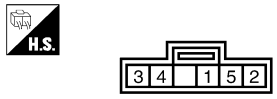

Terminal No.	Color of Wire	Signal Name [Specification]
1	B	–
2	Y	–
3	LG	–
4	G	–
5	P	–

Connector No.	M104
Connector Name	AUTOMATIC DRIVE POSITIONER CONTROL UNIT
Connector Type	NS06FW-CS

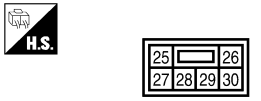

Terminal No.	Color of Wire	Signal Name [Specification]
25	W	UPWARD
26	L	BACKWARD
28	G	DOWNWARD
29	LG	UPWARD/FRONTWARD
30	B	GND

Connector No.	M115
Connector Name	CIRCUIT BREAKER
Connector Type	M02FW-P-LC

Terminal No.	Color of Wire	Signal Name [Specification]
1	W	–
2	W	–

Connector No.	M116
Connector Name	TILT MOTOR
Connector Type	NS06FW-CS

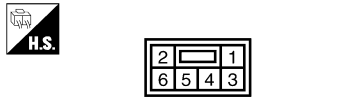

Terminal No.	Color of Wire	Signal Name [Specification]
1	G	–
2	LG	–

Connector No.	M117
Connector Name	TELESCOPIC MOTOR
Connector Type	NS06FW-CS

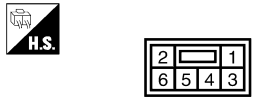

Terminal No.	Color of Wire	Signal Name [Specification]
1	L	–
2	LG	–

JCJWM0690GE

SYMPTOM DIAGNOSIS

REAR SEATBACK POWER RETURN SYSTEM DOES NOT OPERATE BOTH SIDES

BOTH SIDES : Diagnosis Procedure

INFOID:0000000003451750

1. CHECK POWER SUPPLY AND GROUND CIRCUIT

Check power supply and ground circuit.
Refer to SE-15, "REAR SEATBACK POWER RETURN CONTROL UNIT : Diagnosis Procedure".

Is the inspection result normal?

YES >> GO TO 2.
NO >> Repair or replace the malfunctioning parts.

2. CHECK VEHICLE SPEED SIGNAL CIRCUIT

Check vehicle speed signal circuit.
Refer toSE-40, "Component Function Check" .

Is the inspection result normal?

YES >> GO TO 3.
NO >> Repair or replace the malfunctioning parts.

3. CONFIRM THE OPERATION

Confirm the operation again.

Is the inspection result normal?

YES >> Check intermittent incident. Refer to GI-40, "Intermittent Incident".
NO >> GO TO 1.

LH

LH : Diagnosis Procedure

INFOID:0000000003451751

1. PERFORM POWER RETURN SWITCH

Perform power return switch.

From which power return switch (front or rear) does the seat return operation occur?

FRONT>> GO TO 2.
REAR >> GO TO 3.
BOTH SIDES>>GO TO 4.

2. CHECK FRONT POWER RETURN SWITCH (LH)

Check front power return switch (LH).
Refer to SE-17, "LH : Component Function Check".

Is the inspection result normal?

YES >> GO TO 4.
NO >> Repair or replace the malfunctioning parts.

3. CHECK REAR POWER RETURN SWITCH (LH)

Check rear power return switch (LH).
Refer to SE-21, "LH : Component Function Check".

Is the inspection result normal?

YES >> GO TO 4.
NO >> Repair or replace the malfunctioning parts.

4. CHECK POWER RETURN MOTOR (LH)

Check power return motor (LH).
Refer to SE-38, "LH : Component Function Check".

Is the inspection result normal?

YES >> GO TO 5.
NO >> Repair or replace the malfunctioning parts.

5. CHECK RETURN COMPLETE LIMIT SWITCH (LH)

Check return complete limit switch (LH).
Refer to SE-29, "LH : Component Function Check".

Is the inspection result normal?

YES >> GO TO 6.
NO >> Repair or replace the malfunctioning parts.

6. CONFIRM THE OPERATION

Confirm the operation again.

Is the inspection result normal?

YES >> Check intermittent incident. Refer to GI-40, "Intermittent Incident".
NO >> GO TO 1.

RH

RH : Diagnosis Procedure

INFOID:0000000003486746

1. PERFORM POWER RETURN SWITCH

Perform power return switch.

From which power return switch (front or rear) does the seat return operation occur?

FRONT>> GO TO 2.
REAR >> GO TO 3.
BOTH SIDES>>GO TO 4.

2. CHECK FRONT POWER RETURN SWITCH (RH)

Check front power return switch (RH).
Refer to SE-18, "RH : Component Function Check".

Is the inspection result normal?

YES >> GO TO 4.
NO >> Repair or replace the malfunctioning parts.

3. CHECK REAR POWER RETURN SWITCH (RH)

Check rear power return switch (RH).
Refer to SE-22, "RH : Component Function Check".

Is the inspection result normal?

YES >> GO TO 4.
NO >> Repair or replace the malfunctioning parts.

4. CHECK POWER RETURN MOTOR (RH)

Check power return motor (RH).
Refer to SE-39, "RH : Component Function Check".

Is the inspection result normal?

YES >> GO TO 5.
NO >> Repair or replace the malfunctioning parts.

5. CHECK RETURN COMPLETE LIMIT SWITCH (RH)

Check return complete limit switch (RH).
Refer to SE-30, "RH : Component Function Check".

Is the inspection result normal?

YES >> GO TO 6.
NO >> Repair or replace the malfunctioning parts.

6. CONFIRM THE OPERATION

Confirm the operation again.

Is the inspection result normal?

YES >> Check intermittent incident. Refer to GI-40, "Intermittent Incident".
NO >> GO TO 1.

MALFUNCTION DETECTION BUZZER SOUNDS DURING POWER RETURN MOTOR INVERSE ROTATION

LH

LH : Diagnosis Procedure

INFOID:0000000003396968

1. CHECK RETURN COMPLETE LIMIT SWITCH (LH)

Check return complete limit switch (LH).
Refer to SE-29, "LH : Component Function Check".

Is the inspection result normal?

YES >> GO TO 2.
NO >> Repair or replace the malfunctioning parts.

2. CHECK PRIMARY POSITION LIMIT SWITCH (LH)

Check primary position limit switch (LH).
Refer to SE-25, "LH : Component Function Check".

Is the inspection result normal?

YES >> GO TO 3.
NO >> Repair or replace the malfunctioning parts.

3. CHECK POWER RETURN MOTOR (LH)

Check power return motor (LH).
Refer to SE-38, "LH : Component Function Check".

Is the inspection result normal?

YES >> GO TO 4.
NO >> Repair or replace the malfunctioning parts.

4. CONFIRM THE OPERATION

Confirm the operation again.

Is the inspection result normal?

YES >> Check intermittent incident. Refer to GI-40, "Intermittent Incident".
NO >> GO TO 1.

RH

RH : Diagnosis Procedure

INFOID:0000000003396969

1. CHECK RETURN COMPLETE LIMIT SWITCH (RH)

Check return complete limit switch (RH).
Refer to SE-30, "RH : Component Function Check".

Is the inspection result normal?

YES >> GO TO 2.
NO >> Repair or replace the malfunctioning parts.

2. CHECK PRIMARY POSITION LIMIT SWITCH (RH)

Check primary position limit switch (RH).
Refer to SE-26, "RH : Component Function Check".

Is the inspection result normal?

YES >> GO TO 3.
NO >> Repair or replace the malfunctioning parts.

3. CHECK POWER RETURN MOTOR (RH)

Check power return motor (RH).
Refer to SE-39, "RH : Component Function Check".

Is the inspection result normal?

YES >> GO TO 4.

NO >> Repair or replace the malfunctioning parts.

4. CONFIRM THE OPERATION

Confirm the operation again.

Is the inspection result normal?

YES >> Check intermittent incident. Refer to GI-40, "Intermittent Incident".
NO >> GO TO 1.

DOES NOT RETURN BUT MALFUNCTION DETECTION BUZZER SOUNDS

LH

LH : Diagnosis Procedure

INFOID:0000000003420358

1. CHECK PRIMARY POSITION LIMIT SWITCH (LH)

Check primary position limit switch (LH).
Refer to SE-25, "LH : Component Function Check".

Is the inspection result normal?

YES >> GO TO 2.
NO >> Repair or replace the malfunctioning parts.

2. CHECK MOTOR SENSOR (LH)

Check motor sensor (LH).
Refer to SE-33, "LH : Component Function Check".

Is the inspection result normal?

YES >> GO TO 3.
NO >> Repair or replace the malfunctioning parts.

3. CONFIRM THE OPERATION

Confirm the operation again.

Is the inspection result normal?

YES >> Check intermittent incident. Refer to GI-40, "Intermittent Incident".
NO >> GO TO 1.

RH

RH : Diagnosis Procedure

INFOID:0000000003420359

1. CHECK PRIMARY POSITION LIMIT SWITCH (RH)

Check primary position limit switch (RH).
Refer to SE-26, "RH : Component Function Check".

Is the inspection result normal?

YES >> GO TO 2.
NO >> Repair or replace the malfunctioning parts.

2. CHECK MOTOR SENSOR (RH)

Check motor sensor (RH).
Refer to SE-35, "RH : Component Function Check".

Is the inspection result normal?

YES >> GO TO 3.
NO >> Repair or replace the malfunctioning parts.

3. CONFIRM THE OPERATION

Confirm the operation again.

Is the inspection result normal?

YES >> Check intermittent incident. Refer to GI-40, "Intermittent Incident".
NO >> GO TO 1.

ANTI-PINCH FUNCTION DOES NOT OPERATE

Diagnosis Procedure

INFOID:0000000003566179

1. CHECK MOTOR SENSOR (LH)

Check motor sensor (LH).
Refer to SE-33, "LH : Component Function Check".

Is the inspection result normal?

YES >> GO TO 2.
NO >> Repair or replace the malfunctioning parts.

2. CHECK MOTOR SENSOR (RH)

Check motor sensor (RH).
Refer to SE-35, "RH : Component Function Check".

Is the inspection result normal?

YES >> Replace rear seatback power return control unit. Refer to SE-127, "Removal and Installation".
NO >> Repair or replace the malfunctioning parts.

TILT FUNCTION DOES NOT OPERATE

Diagnosis Procedure

INFOID:0000000003566176

1. CHECK TILT & TELESCOPIC SWITCH

Check tilt & telescopic switch.
Refer to SE-42, "Component Function Check".

Is the inspection result normal?

YES >> GO TO 2.
NO >> Repair or replace the malfunctioning parts.

2. CHECK TILT MOTOR

Check tilt motor.
Refer to SE-44, "Component Function Check".

Is the inspection result normal?

YES >> GO TO 3.
NO >> Repair or replace the malfunctioning parts.

3. CONFIRM THE OPERATION

Confirm the operation again.

Is the inspection result normal?

YES >> Check intermittent incident. Refer to GI-40, "Intermittent Incident".
NO >> GO TO 1.

TELESCOPIC FUNCTION DOES NOT OPERATE

Diagnosis Procedure

INFOID:0000000003566177

1. CHECK TILT & TELESCOPIC SWITCH

Check tilt & telescopic switch.
Refer to SE-42, "Component Function Check".

Is the inspection result normal?

YES >> GO TO 2.
NO >> Repair or replace the malfunctioning parts.

2. CHECK TELESCOPIC MOTOR

Check telescopic motor.
Refer to SE-45, "Component Function Check".

Is the inspection result normal?

YES >> GO TO 3.
NO >> Repair or replace the malfunctioning parts.

3. CONFIRM THE OPERATION

Confirm the operation again.

Is the inspection result normal?

YES >> Check intermittent incident. Refer to GI-40, "Intermittent Incident".
NO >> GO TO 1.

SQUEAK AND RATTLE TROUBLE DIAGNOSES

Work Flow

INFOID:0000000004778680

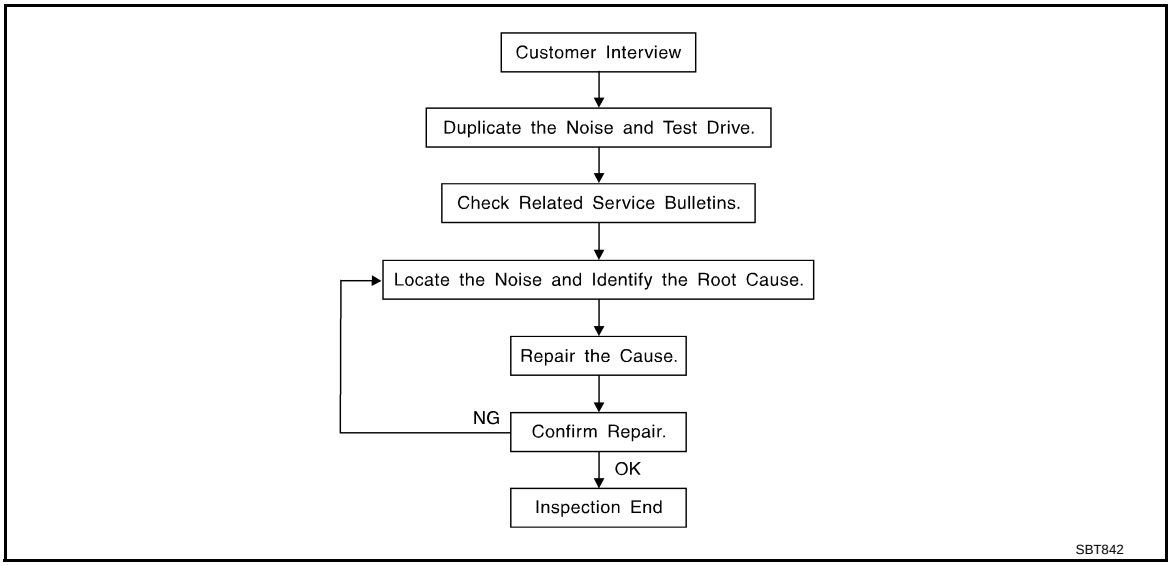

CUSTOMER INTERVIEW

Interview the customer if possible, to determine the conditions that exist when the noise occurs. Use the Diagnostic Worksheet during the interview to document the facts and conditions when the noise occurs and any of customer's comments; refer to SE-94, "Diagnostic Worksheet". This information is necessary to duplicate the conditions that exist when the noise occurs.

- The customer may not be able to provide a detailed description or the location of the noise. Attempt to obtain all the facts and conditions that exist when the noise occurs (or does not occur).
- If there is more than one noise in the vehicle, perform a diagnosis and repair the noise that the customer is concerned about. This can be accomplished by performing a cruise test on the vehicle with the customer.
- After identifying the type of noise, isolate the noise in terms of its characteristics. The noise characteristics are provided so the customer, service adviser and technician are all speaking the same language when defining the noise.
- Squeak – (Like tennis shoes on a clean floor)
  Squeak characteristics include the light contact/fast movement/brought on by road conditions/hard surfaces = higher pitch noise/softer surfaces = lower pitch noises/edge to surface = chirping
- Creak – (Like walking on an old wooden floor)
  Creak characteristics include firm contact/slow movement/twisting with a rotational movement/pitch dependent on materials/often brought on by activity.
- Rattle – (Like shaking a baby rattle)
  Rattle characteristics include the fast repeated contact/vibration or similar movement/loose parts/missing clip or fastener/incorrect clearance.
- Knock – (Like a knock on a door)
  Knock characteristics include hollow sounding/sometimes repeating/often brought on by driver action.
- Tick – (Like a clock second hand)
  Tick characteristics include gentle contacting of light materials/loose components/can be caused by driver action or road conditions.
- Thump – (Heavy, muffled knock noise)
  Thump characteristics include softer knock/dead sound often brought on by activity.
- Buzz – (Like a bumblebee)
  Buzz characteristics include high frequency rattle/firm contact.
- Often the degree of acceptable noise level will vary depending up on the person. A noise that a technician may judge as acceptable may be very irritating to the customer.
- Weather conditions, especially humidity and temperature, may have a great effect on noise level.

DUPLICATE THE NOISE AND TEST DRIVE

If possible, drive the vehicle with the customer until the noise is duplicated. Note any additional information on the Diagnostic Worksheet regarding the conditions or location of the noise. This information can be used to duplicate the same conditions when the repair is reconfirmed.

If the noise can be duplicated easily during the test drive, to help identify the source of the noise, try to duplicate the noise with the vehicle stopped by doing one or all of the following:
1) Close a door.
2) Tap or push/pull around the area where the noise appears to be coming from.
3) Rev the engine.
4) Use a floor jack to recreate vehicle “twist”.
5) At idle, apply engine load (electrical load, half-clutch on M/T models, drive position on A/T models).
6) Raise the vehicle on a hoist and hit a tire with a rubber hammer.

- Drive the vehicle and attempt to duplicate the conditions the customer states exist when the noise occurs.
- If it is difficult to duplicate the noise, drive the vehicle slowly on an undulating or rough road to stress the vehicle body.

CHECK RELATED SERVICE BULLETINS

After verifying the customer concern or symptom, check ASIST for Technical Service Bulletins (TSBs) related to that concern or symptom.
If a TSB relates to the symptom, follow the procedure to repair the noise.

LOCATE THE NOISE AND IDENTIFY THE ROOT CAUSE

1. Narrow down the noise to a general area. To help pinpoint the source of the noise, use a listening tool (Chassis ear: J-39570, Engine ear and mechanics stethoscope).
2. Narrow down the noise to a more specific area and identify the cause of the noise by:

- Removing the components in the area that is are suspected to be the cause of the noise.
  Do not use too much force when removing clips and fasteners, otherwise clips and fastener can be broken or lost during the repair, resulting in the creation of new noise.
- Tapping or pushing/pulling the component that is are suspected to be the cause of the noise.
  Do not tap or push/pull the component with excessive force, otherwise the noise will be eliminated only temporarily.
- Feeling for a vibration by hand by touching the component(s) that is are suspected to be the cause of the noise.
- Placing a piece of paper between components that are suspected to be the cause of the noise.
- Looking for loose components and contact marks.
  Refer to SE-92, "Inspection Procedure".

REPAIR THE CAUSE

- If the cause is a loose component, tighten the component securely.
- If the cause is insufficient clearance between components:
- Separate components by repositioning or loosening and retightening the component, if possible.
- Insulate components with a suitable insulator such as urethane pads, foam blocks, felt cloth tape or urethane tape. A Nissan Squeak and Rattle Kit (J-43980) is available through the authorized Nissan Parts Department.

CAUTION:
Never use excessive force as many components are constructed of plastic and may be damaged.
NOTE:
Always check with the Parts Department for the latest parts information.
The following materials are contained in the Nissan Squeak and Rattle Kit (J-43980). Each item can be ordered separately as needed.
URETHANE PADS [1.5 mm (0.059 in) thick]
Insulates connectors, harness, etc.
76268-9E005: 100 × 135 mm (3.94 × 5.31 in)/76884-71L01: 60 × 85 mm (2.36 × 3.35 in)/76884-71L02:15 × 25 mm (0.59 × 0.98 in)
INSULATOR (Foam blocks)
Insulates components from contact. Can be used to fill space behind a panel.
73982-9E000: 45 mm (1.77 in) thick, 50 × 50 mm (1.97 × 1.97 in)/73982-50Y00: 10 mm (0.39 in) thick, 50 × 50 mm (1.97 × 1.97 in)
INSULATOR (Light foam block)
80845-71L00: 30 mm (1.18 in) thick, 30 × 50 mm (1.18 × 1.97in)
FELT CLOTHTAPE
Used to insulate where movement does not occur. Ideal for instrument panel applications.
68370-4B000: 15 × 25 mm (0.59 × 0.98 in) pad/68239-13E00: 5 mm (0.20 in) wide tape roll
The following materials, not found in the kit, can also be used to repair squeaks and rattles.
UHMW (TEFLON) TAPE

Insulates where slight movement is present. Ideal for instrument panel applications.
SILICONE GREASE
Used in place of UHMW tape that is be visible or does not fit. Will only last a few months.
SILICONE SPRAY
Used when grease cannot be applied.
DUCT TAPE
Used to eliminate movement.

CONFIRM THE REPAIR

Confirm that the cause of a noise is repaired by test driving the vehicle. Operate the vehicle under the same conditions as when the noise originally occurred. Refer to the notes on the Diagnostic Worksheet.

Inspection Procedure

INFOID:0000000004778681

Refer to Table of Contents for specific component removal and installation information.

INSTRUMENT PANEL

Most incidents are caused by contact and movement between:

1. The cluster lid A and instrument panel
2. Acrylic lens and combination meter housing
3. Instrument panel to front pillar garnish
4. Instrument panel to windshield
5. Instrument panel mounting pins
6. Wiring harnesses behind the combination meter
7. A/C defroster duct and duct joint
   These incidents can usually be located by tapping or moving the components to duplicate the noise or by pressing on the components while driving to stop the noise. Most of these incidents can be repaired by applying felt cloth tape or silicon spray (in hard to reach areas). Urethane pads can be used to insulate wiring harness.
   CAUTION:
   Never use silicone spray to isolate a squeak or rattle. If the area is saturated with silicone, the recheck of repair becomes impossible.

CENTER CONSOLE

Components to pay attention to include:

1. Shifter assembly cover to finisher
2. A/C control unit and cluster lid C
3. Wiring harnesses behind audio and A/C control unit

The instrument panel repair and isolation procedures also apply to the center console.

DOORS

Pay attention to the following:

1. Finisher and inner panel making a slapping noise
2. Inside handle escutcheon to door finisher
3. Wiring harnesses tapping
4. Door striker out of alignment causing a popping noise on starts and stops

Tapping or moving the components or pressing on them while driving to duplicate the conditions can isolate many of these incidents. The areas can usually be insulated with felt cloth tape or insulator foam blocks from the Nissan Squeak and Rattle Kit (J-43980) to repair the noise.

TRUNK

Trunk noises are often caused by a loose jack or loose items put into the trunk by the customer.
In addition look for the following:

1. Trunk lid dumpers out of adjustment
2. Trunk lid striker out of adjustment
3. The trunk lid torsion bars knocking together
4. A loose license plate or bracket

Most of these incidents can be repaired by adjusting, securing or insulating the item(s) or component(s) causing the noise.

SUNROOF/HEADLINING

Noises in the sunroof/headlining area can often be traced to one of the following:

1. Sunroof lid, rail, linkage or seals making a rattle or light knocking noise
2. Sunvisor shaft shaking in the holder
3. Front or rear windshield touching headlining and squeaking

Again, pressing on the components to stop the noise while duplicating the conditions can isolate most of these incidents. Repairs usually consist of insulating with felt cloth tape.

SEATS

When isolating seat noise it's important to note the position the seats in and the load placed on the seat when the noise occurs. These conditions should be duplicated when verifying and isolating the cause of the noise.
Cause of seat noise include:

1. Headrest rods and holder
2. A squeak between the seat pad cushion and frame
3. The rear seatback lock and bracket

These noises can be isolated by moving or pressing on the suspected components while duplicating the conditions under which the noise occurs.Most of these incidents can be repaired by repositioning the component or applying urethane tape to the contact area.

UNDERHOOD

Some interior noise may be caused by components under the hood or on the engine wall. The noise is then transmitted into the passenger compartment.
Causes of transmitted underhood noise include:

1. Any component mounted to the engine wall
2. Components that pass through the engine wall
3. Engine wall mounts and connectors
4. Loose radiator mounting pins
5. Hood bumpers out of adjustment
6. Hood striker out of adjustment

These noises can be difficult to isolate since they cannot be reached from the interior of the vehicle. The best method is to secure, move or insulate one component at a time and test drive the vehicle. Also, engine RPM or load can be changed to isolate the noise. Repairs can usually be made by moving, adjusting, securing, or insulating the component causing the noise.

Diagnostic Worksheet

INFOID:0000000003690556

SQUEAK & RATTLE DIAGNOSTIC WORKSHEET

Dear Nissan Customer:
We are concerned about your satisfaction with your Nissan vehicle. Repairing a squeak or rattle sometimes can be very difficult. To help us fix your Nissan right the first time, please take a moment to note the area of the vehicle where the squeak or rattle occurs and under what conditions. You may be asked to take a test drive with a service advisor or technician to ensure we confirm the noise you are hearing.

I. WHERE DOES THE NOISE COME FROM? (circle the area of the vehicle)
The illustrations are for reference only, and may not reflect the actual configuration of your vehicle.

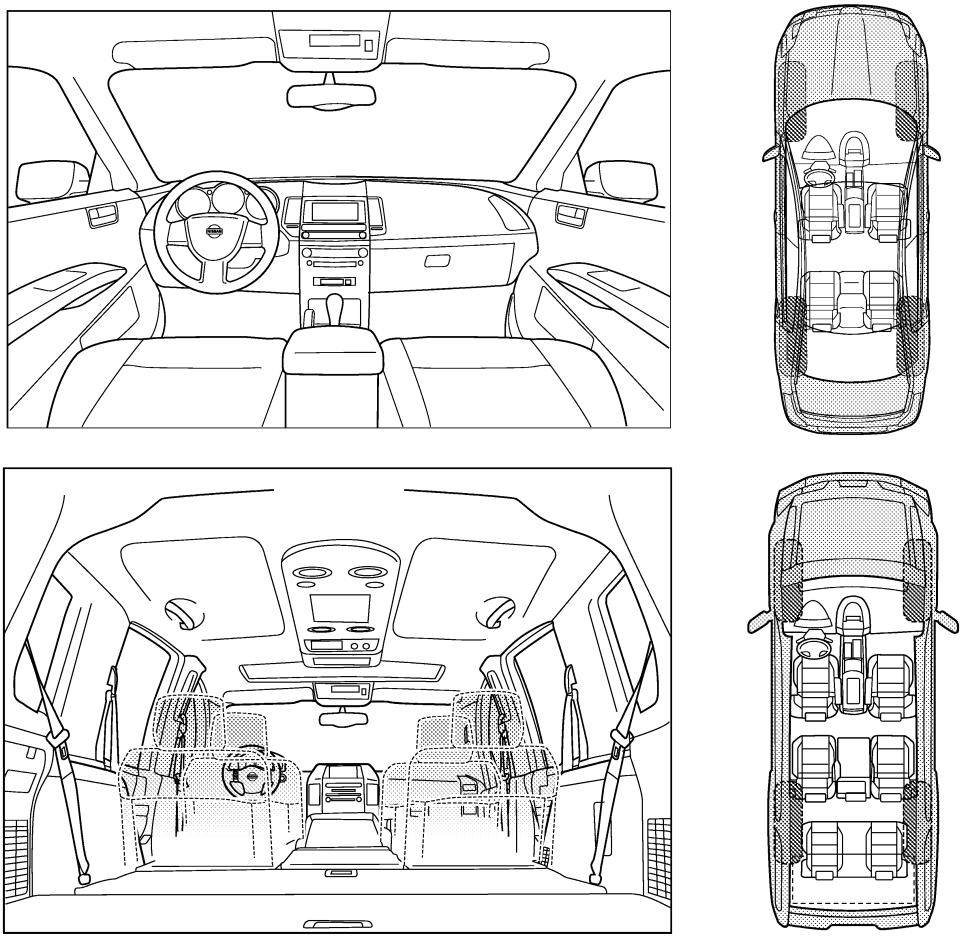

Continue to page 2 of the worksheet and briefly describe the location of the noise or rattle. In addition, please indicate the conditions which are present when the noise occurs.

PIIB8740E

SQUEAK & RATTLE DIAGNOSTIC WORKSHEET - page 2

Briefly describe the location where the noise occurs:

_____

_____

II. WHEN DOES IT OCCUR? (please check the boxes that apply)

- ☐ anytime
- ☐ 1st time in the morning
- ☐ only when it is cold outside
- ☐ only when it is hot outside
- ☐ after sitting out in the rain
- ☐ when it is raining or wet
- ☐ dry or dusty conditions
- ☐ other:

III. WHEN DRIVING:

- ☐ through driveways
- ☐ over rough roads
- ☐ over speed bumps
- ☐ only about ____ mph
- ☐ on acceleration
- ☐ coming to a stop
- ☐ on turns: left, right or either (circle)
- ☐ with passengers or cargo
- ☐ other: _____
- ☐ after driving _____ miles or _____ minutes

IV. WHAT TYPE OF NOISE

- ☐ squeak (like tennis shoes on a clean floor)
- ☐ creak (like walking on an old wooden floor)
- ☐ rattle (like shaking a baby rattle)
- ☐ knock (like a knock at the door)
- ☐ tick (like a clock second hand)
- ☐ thump (heavy, muffled knock noise)
- ☐ buzz (like a bumble bee)

TO BE COMPLETED BY DEALERSHIP PERSONNEL

Test Drive Notes:

_____

_____

_____

	YES	NO	Initials of person performing
Vehicle test driven with customer	☐	☐	_____
- Noise verified on test drive	☐	☐	_____
- Noise source located and repaired	☐	☐	_____
- Follow up test drive performed to confirm repair	☐	☐	_____

VIN: _____ Customer Name: _____

W.O.# _____ Date: _____

This form must be attached to Work Order

PIIB8742E

PRECAUTION

PRECAUTIONS

Precaution for Supplemental Restraint System (SRS) "AIR BAG" and "SEAT BELT PRE-TENSIONER"

INFOID:0000000003685470

The Supplemental Restraint System such as “AIR BAG” and “SEAT BELT PRE-TENSIONER”, used along with a front seat belt, helps to reduce the risk or severity of injury to the driver and front passenger for certain types of collision. This system includes seat belt switch inputs and dual stage front air bag modules. The SRS system uses the seat belt switches to determine the front air bag deployment, and may only deploy one front air bag, depending on the severity of a collision and whether the front occupants are belted or unbelted.
Information necessary to service the system safely is included in the “SRS AIRBAG” and “SEAT BELT” of this Service Manual.

WARNING:

- **To avoid rendering the SRS inoperative, which could increase the risk of personal injury or death in the event of a collision which would result in air bag inflation, all maintenance must be performed by an authorized NISSAN/INFINITI dealer.**
- **Improper maintenance, including incorrect removal and installation of the SRS, can lead to personal injury caused by unintentional activation of the system. For removal of Spiral Cable and Air Bag Module, see the “SRS AIRBAG”.**
- **Never use electrical test equipment on any circuit related to the SRS unless instructed to in this Service Manual. SRS wiring harnesses can be identified by yellow and/or orange harnesses or harness connectors.**

PRECAUTIONS WHEN USING POWER TOOLS (AIR OR ELECTRIC) AND HAMMERS

When working near the Airbag Diagnosis Sensor Unit or other Airbag System sensors while ignition switch is ON or engine is running, never use air or electric power tools or strike near the sensor(s) with a hammer. Heavy vibration may activate the sensor(s), deploy the airbag(s), possibly cause serious injury.
When using air or electric power tools or hammers, always turn OFF ignition switch, disconnect the battery, and wait 3 minutes or more before performing any service.

Precaution Necessary for Steering Wheel Rotation after Battery Disconnect

INFOID:0000000003685472

NOTE:

- Before removing and installing any control units, first turn the push-button ignition switch to the LOCK position, then disconnect both battery cables.
- After finishing work, confirm that all control unit connectors are connected properly, then re-connect both battery cables.
- Always use CONSULT-III to perform self-diagnosis as a part of each function inspection after finishing work. If a DTC is detected, perform trouble diagnosis according to self-diagnosis results.

This vehicle is equipped with a push-button ignition switch and a steering lock unit.
If the battery is disconnected or discharged, the steering wheel will lock and cannot be turned.
If turning the steering wheel is required with the battery disconnected or discharged, follow the procedure below before starting the repair operation.

OPERATION PROCEDURE

1. Connect both battery cables.
   NOTE:
   Supply power using jumper cables if battery is discharged.
2. Turn the push-button ignition switch to ACC position.
   (At this time, the steering lock will be released.)
3. Disconnect both battery cables. The steering lock will remain released with both battery cables disconnected and the steering wheel can be turned.
4. Perform the necessary repair operation.
5. When the repair work is completed, re-connect both battery cables. With the brake pedal released, turn the push-button ignition switch from ACC position to ON position, then to LOCK position. (The steering wheel will lock when the push-button ignition switch is turned to LOCK position.)
6. Perform self-diagnosis check of all control units using CONSULT-III.

Service Notice

INFOID:0000000003396986

- When removing or installing various parts, place a cloth or padding onto the vehicle body to prevent scratches.
- Handle trim, molding, instruments, grille, etc. carefully during removing or installing. Be careful not to oil or damage them.
- Apply sealing compound where necessary when installing parts.
- When applying sealing compound, be careful that the sealing compound does not protrude from parts.
- When replacing any metal parts (for example body outer panel, members, etc.), be sure to take rust prevention measures.

Precaution for Work

INFOID:0000000003396987

- When removing or disassembling each component, be careful not to damage or deform it. If a component may be subject to interference, be sure to protect it with a shop cloth.
- When removing (disengaging) components with a screwdriver or similar tool, be sure to wrap the component with a shop cloth or vinyl tape to protect it.
- Protect the removed parts with a shop cloth and keep them.
- Replace a deformed or damaged clip.
- If a part is specified as a non-reusable part, always replace it with new one.
- Be sure to tighten bolts and nuts securely to the specified torque.
- After re-installation is completed, be sure to check that each part works normally.
- Follow the steps below to clean components.
- Water soluble foul: Dip a soft cloth into lukewarm water, and wring the water out of the cloth to wipe the fouled area.
  Then rub with a soft and dry cloth.
- Oily foul: Dip a soft cloth into lukewarm water with mild detergent (concentration: within 2 to 3%), and wipe the fouled area.
  Then dip a cloth into fresh water, and wring the water out of the cloth to wipe the detergent off. Then rub with a soft and dry cloth.
- Never use organic solvent such as thinner, benzene, alcohol, and gasoline.
- For genuine leather seats, use a genuine leather seat cleaner.

PREPARATION

PREPARATION

Special Service Tool

INFOID:0000000003396988

The actual shapes of Kent-Moore tools may differ from those of special service tools illustrated here.

Tool number (Kent-Moore No.) Tool name		Description
(J39570) Chassis ear	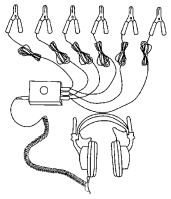 SIIA0993E	Locates the noise
(J43980) NISSAN Squeak and Rattle Kit	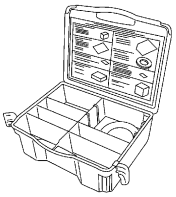 SIIA0994E	Repairs the cause of noise

Commercial Service Tool

INFOID:0000000003396989

Tool name		Description
Engine ear	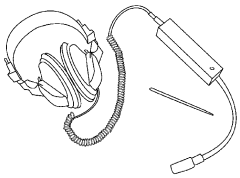 SIIA0995E	Locates the noise
Remover tool	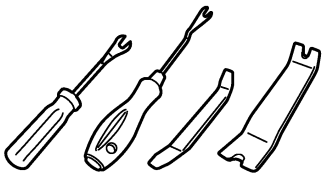 JMKIA3050ZZ	Removes the clips, pawls and metal clips
Hook and pick tool	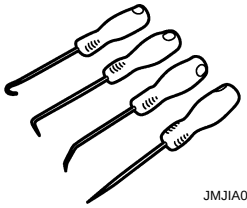 JMJIA0490ZZ	Removes the snap pins

ON-VEHICLE REPAIR

FRONT SEAT

Exploded View

INFOID:0000000003396990

DRIVER'S POWER SEAT

SEC. 870

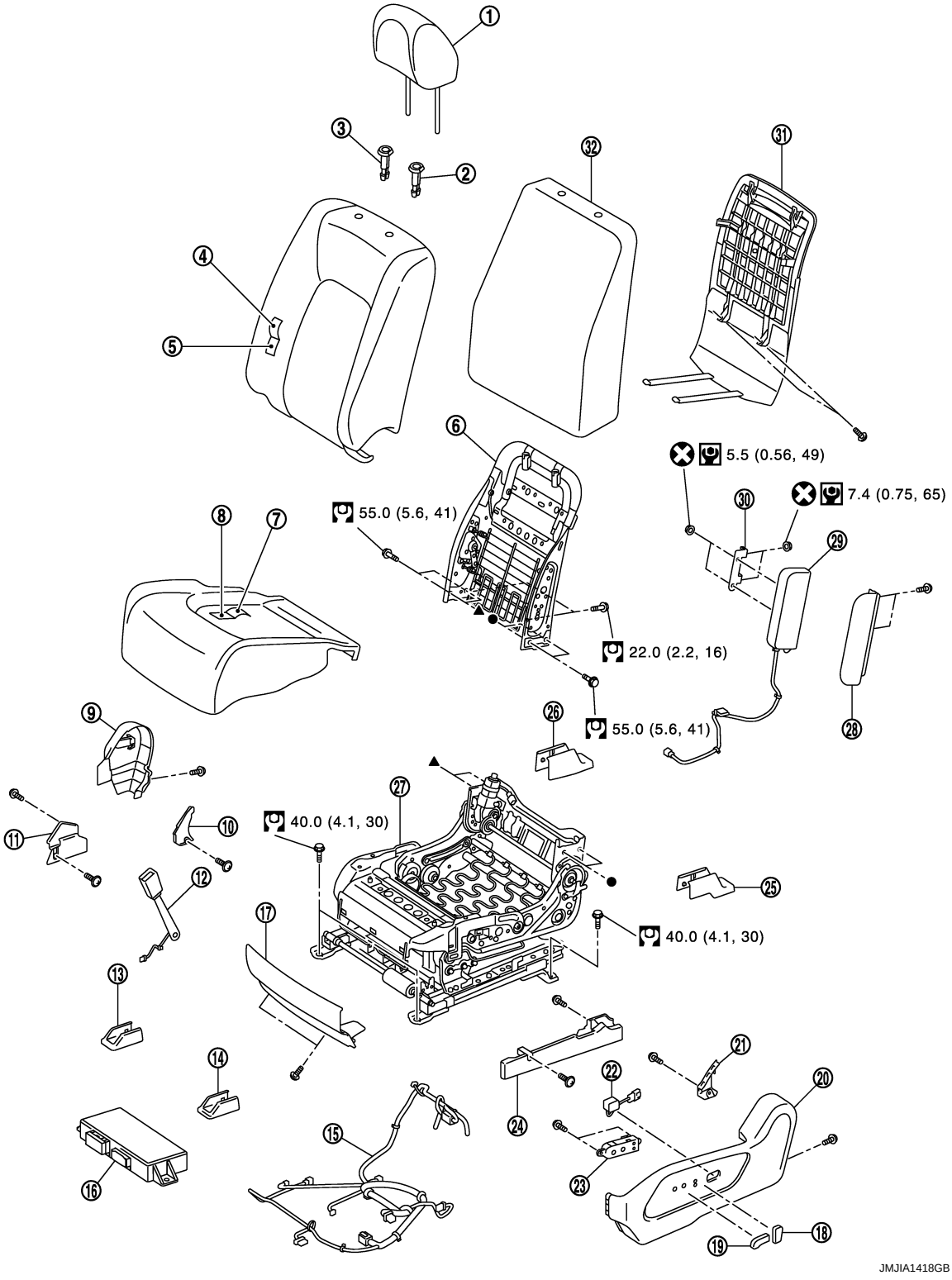

1. Headrest
2. Headrest holder (locked)
3. Headrest holder (free)
4. Seatback trim
5. Seatback pad
6. Seatback frame
7. Seat cushion trim
8. Seat cushion pad
9. Seat cushion inner finisher outside
10. Seat cushion inner finisher inside (right)
11. Seat slide inner cover
12. Seat belt buckle
13. Front inner slide cover
14. Front outer slide cover
15. Seat harness
16. Seat control unit
17. Seat cushion front finisher
18. Seat reclining switch knob
19. Seat control switch knob
20. Seat cushion outer finisher outside
21. Seat cushion outer finisher inside (left)
22. Lumbar support switch
23. Seat control switch
24. Seat slide outer cover
25. Rear outer slide cover
26. Rear inner slide cover
27. Seat cushion frame
28. Side air bag module cover
29. Side air bag module
30. Side air bag module mounting bracket
31. Seatback board
32. Seatback silencer

Refer to GI-4, "Components" for symbols in the figure.

DRIVER'S MANUAL SEAT

SEC. 870

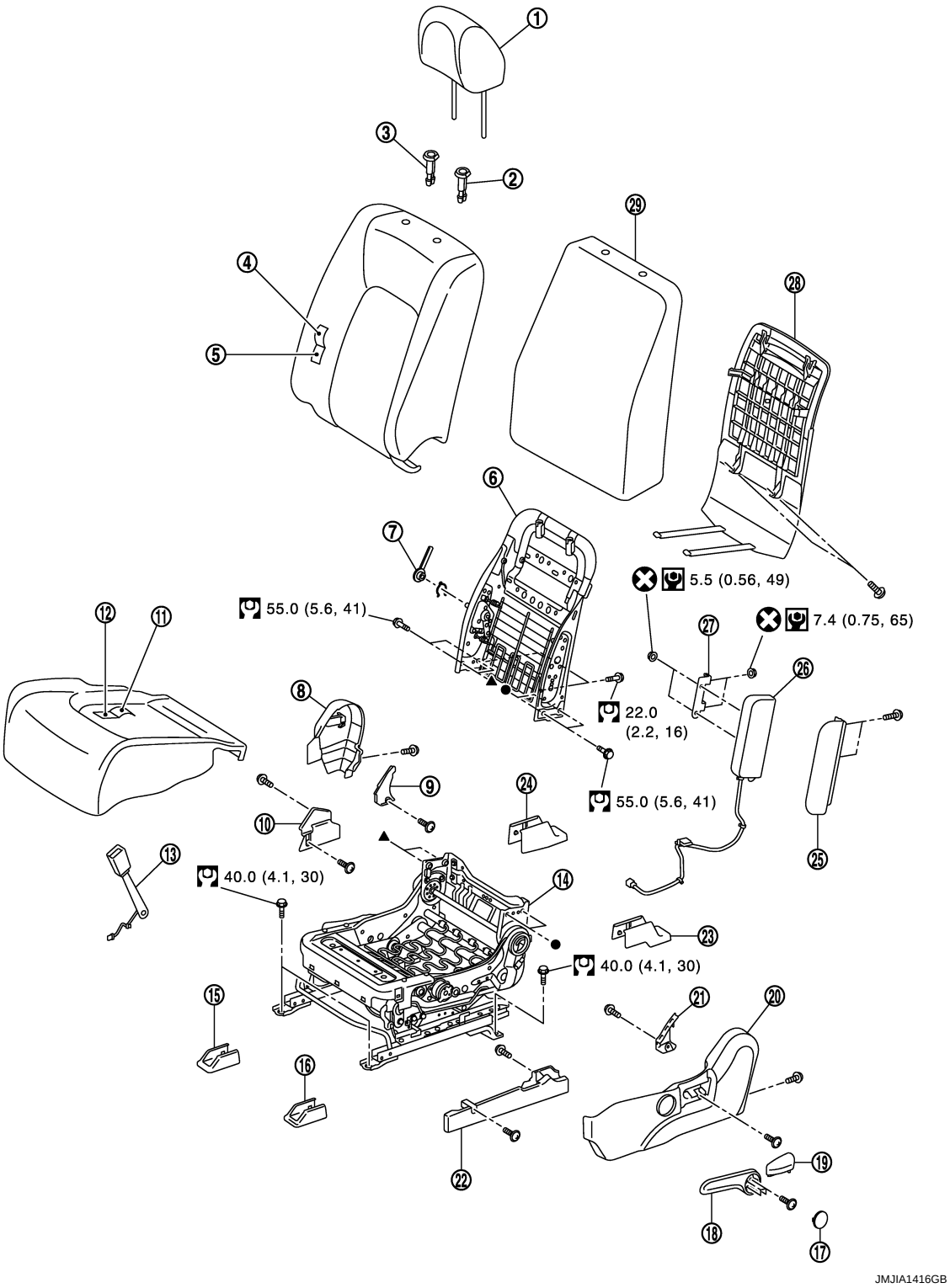

1. Headrest	2. Headrest holder (locked)	3. Headrest holder (free)
4. Seatback trim	5. Seatback pad	6. Seatback frame
7. Lumbar support lever	8. Seat cushion inner finisher outside	9. Seat cushion inner finisher inside (right)
10. Seat slide inner cover	11. Seat cushion trim	12. Seat cushion pad
13. Seat belt buckle	14. Seat cushion frame	15. Front inner slide cover

16. Front outer slide cover
17. Lifter lever knob finisher
18. Lifter lever
19. Reclining lever
20. Seat cushion outer finisher outside
21. Seat cushion outer finisher inside (left)
22. Seat slide outer cover
23. Rear outer slide cover
24. Rear inner slide cover
25. Side air bag module cover
26. Side air bag module
27. Side air bag module mounting bracket
28. Seatback board
29. Seatback silencer

Refer to GI-4, "Components" for symbols in the figure.

PASSENGER'S POWER SEAT

CAUTION:

Never disassembly the component parts of only front passenger seat in the dotted lines shown in the figure below. (With occupant classification system control unit model)

SEC. 870

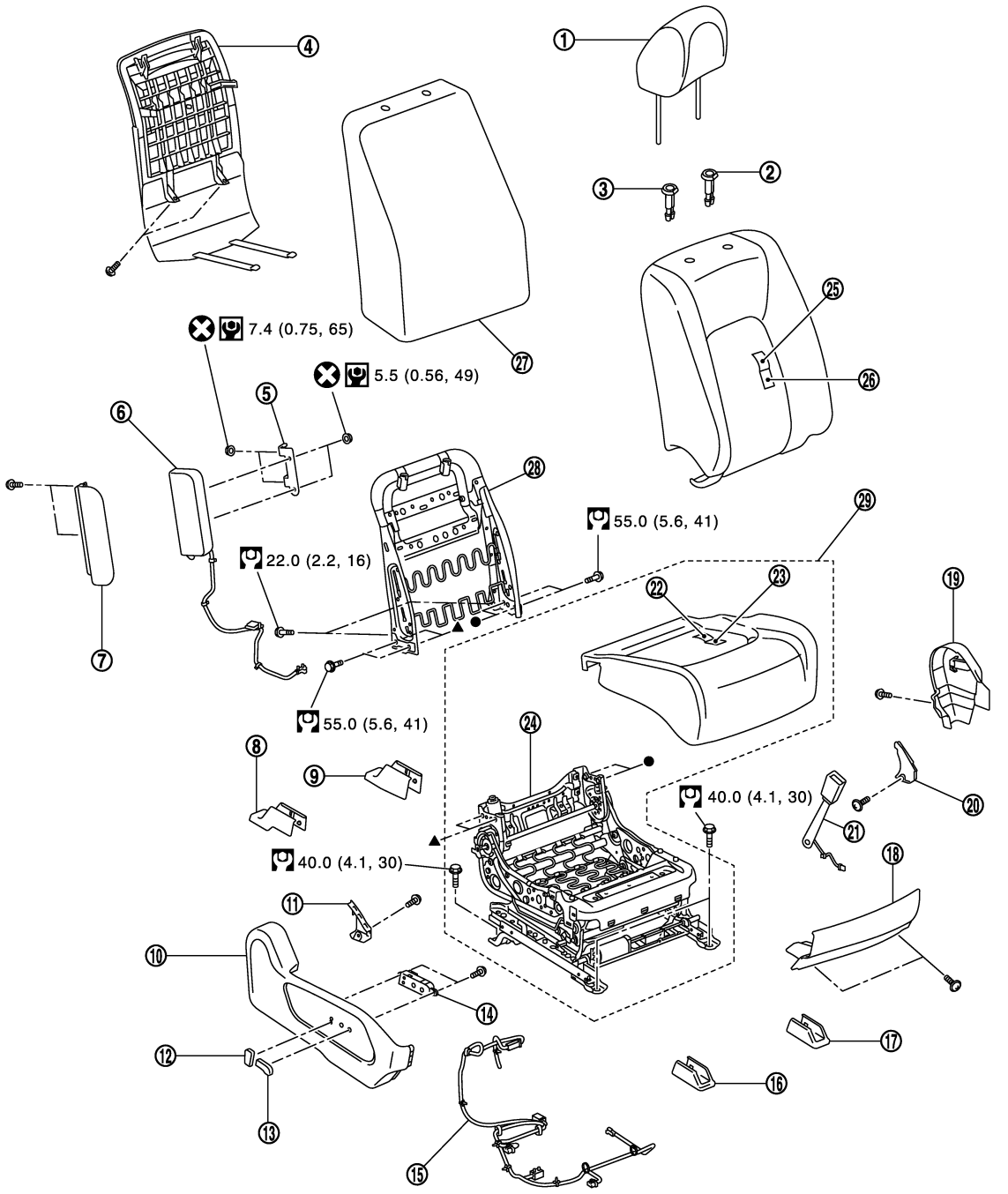

1.	Headrest	2.	Headrest holder (locked)	3.	Headrest holder (free)
4.	Seatback board	5.	Side air bag module mounting bracket	6.	Side air bag module
7.	Side air bag module cover	8.	Rear outer slide cover	9.	Rear inner slide cover
10.	Seat cushion outer finisher outside	11.	Seat cushion outer finisher inside (right)	12.	Seat reclining switch knob
13.	Seat control switch knob	14.	Seat control switch	15.	Seat harness

16. Front outer slide cover
17. Front inner slide cover
18. Seat cushion front finisher
19. Seat cushion inner finisher outside
20. Seat cushion inner finisher inside (left)
21. Seat belt buckle
22. Seat cushion trim
23. Seat cushion pad
24. Seat cushion frame
25. Seatback trim
26. Seatback pad
27. Seatback silencer
28. Seatback frame
29. Seat cushion assembly

Refer to GI-4, "Components" for symbols in the figure.

PASSENGER'S MANUAL SEAT

CAUTION:

Never disassembly the component parts of only front passenger seat in the dotted lines shown in the figure below. (With occupant classification system control unit model)

SEC. 870

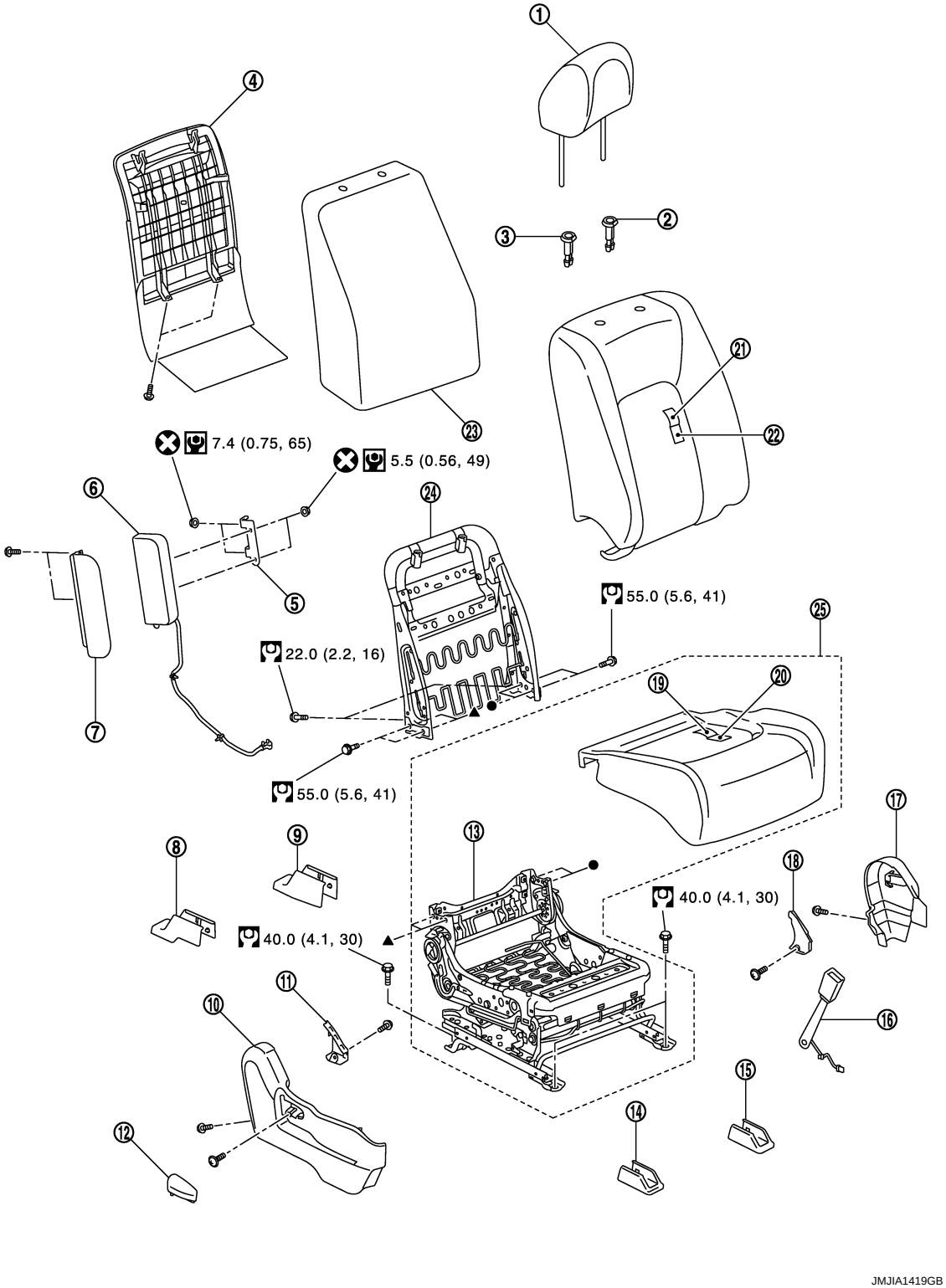

1. Headrest	2. Headrest holder (locked)	3. Headrest holder (free)
4. Seatback board	5. Side air bag module mounting bracket	6. Side air bag module
7. Side air bag module cover	8. Rear outer slide cover	9. Rear inner slide cover
10. Seat cushion outer finisher outside	11. Seat cushion outer finisher inside (right)	12. Reclining lever
13. Seat cushion frame	14. Front outer slide cover	15. Front inner slide cover

16. Seat belt buckle
17. Seat cushion inner finisher outside
18. Seat cushion inner finisher inside (left)
19. Seat cushion trim
20. Seat cushion pad
21. Seatback trim
22. Seatback pad
23. Seatback silencer
24. Seatback frame
25. Seat cushion assembly

Refer to GI-4, "Components" for symbols in the figure.

Removal and Installation

INFOID:0000000003396991

REMOVAL

CAUTION:
When removing and installing, use shop cloths to protect parts from damage.

1. Remove the headrest.
2. Remove the front slide cover.
3. Remove the mounting bolts on the front side of the front seat.
4. Remove the rear slide cover.
5. Remove the mounting bolts on the rear side of the front seat.
6. Set seatback in a standing position.
7. Disconnect harness connector under the seat and remove harness securing clips.
   CAUTION:
   Before removal, turn ignition switch OFF, disconnect battery negative terminal and then wait for at least 3 minutes.
8. Remove seat from the vehicle.
   CAUTION:
   - **When removing and installing, use shop cloths to protect parts from damage.**
   - **When removing and installing, 2 workers are required so as to prevent it from dropping.**

INSTALLATION

Install in the reverse order of removal.

CAUTION:

- **Before installation, turn ignition switch OFF, disconnect battery negative terminal and then wait for at least 3 minutes.**
- **Clamp the harness in position.**

NOTE:

After installing the front seat, perform additional service when removing battery negative terminal.(With automatic drive positioner model) Refer to ADP-8, "ADDITIONAL SERVICE WHEN REMOVING BATTERY NEGATIVE TERMINAL : Description".

Disassembly and Assembly

INFOID:0000000003396992

SEATBACK

Disassembly

1. Remove the seatback board.
   - Remove the seatback board band from seat cushion bottom side.
   - Remove the seatback board mounting screws (A).

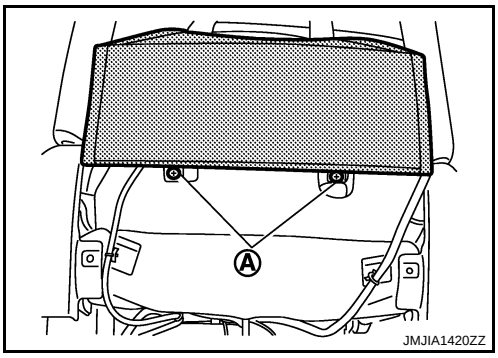

- Pull down the seatback board to release the pawls.

: Pawl

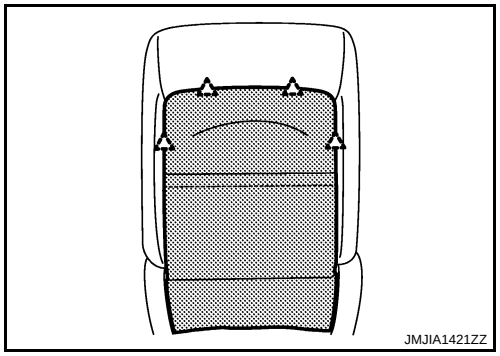

2. Disconnect the harness connectors and remove the harness clamps.
   - Remove the seatback trim retainer (1).

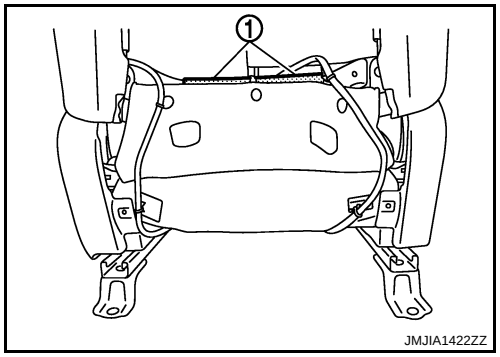

   - Disconnect the seatback heater harness connector (A) (Heater seat only), lumbar support harness connector (B) (Driver's seat only) and reclining motor harness connector (C) (Power seat only).

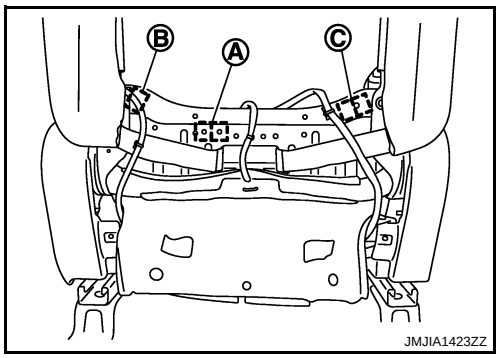

3. Remove the side air bag module.
   - Remove the seatback trim retainer.
   - Remove the side air bag module cover mounting screws (A).
   - Remove the side air bag module.

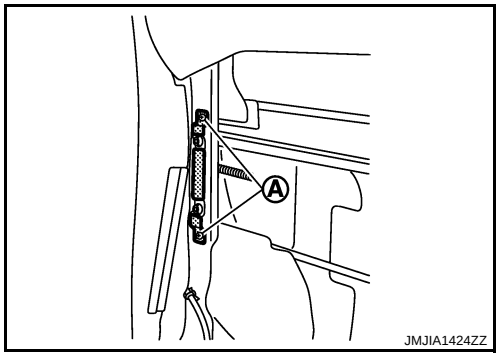

4. Remove the lumbar support lever knob. (Manual lumbar support seat only.)

Pull snap ring (1) upward, and remove lumbar support lever knob (2) from seatback frame with hook and pick tool.

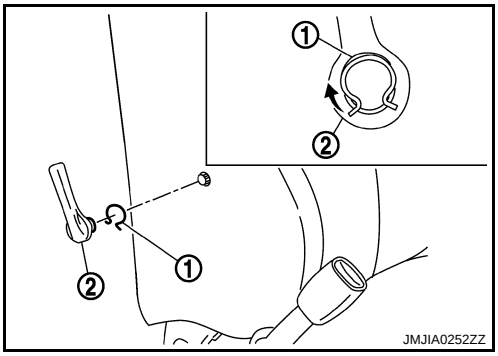

5. Remove the seatback trim and seatback pad.
   - Remove the headrest holder.
     CAUTION:
     Before installing headrest holder check its orientation. (front/rear and right/left)
   - Remove the seatback trim and seatback pad from the seatback frame.
   - Remove the hog rings, and separate the seatback trim and seatback pad.

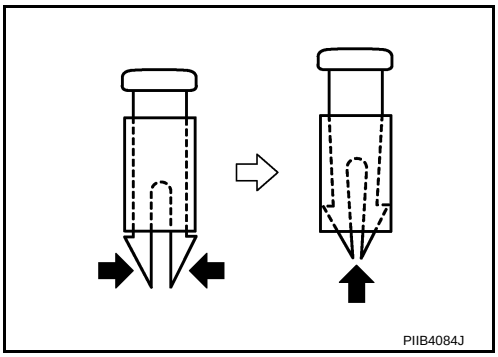

6. Remove the seatback silencer.
7. Remove the seatback frame.
   Remove the seatback frame mounting bolts (A).

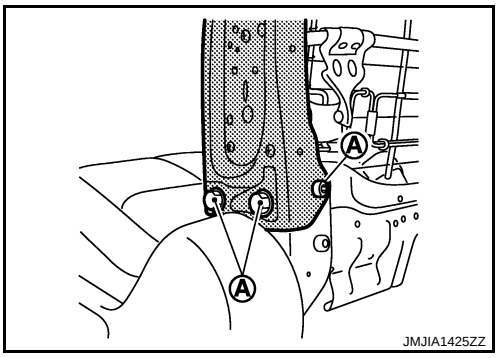

Assembly
Assemble in the reverse order of disassembly.
CAUTION:
Install the hog rings of seatback trim in position, and then securely connect the trim or trim cord with the pad side wire.

SEAT CUSHION

Disassembly
CAUTION:
Never disassemble front passenger seat cushion assembly.
Always replace as an assembly.
For front passenger seat service parts, refer to the service part catalogue.

1. Remove the seatback board.

- Remove the seatback board fixing band on the bottom of seat cushion.
- Remove the seatback board mounting screws (A).

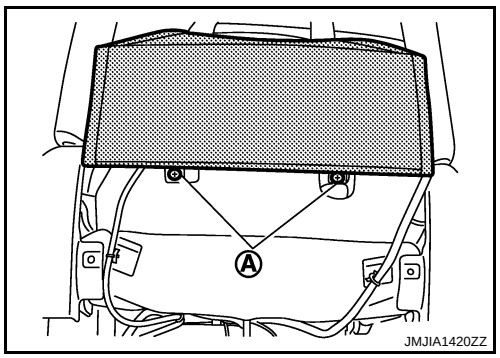

- Pull down the seatback board to release the pawls.

: Pawl

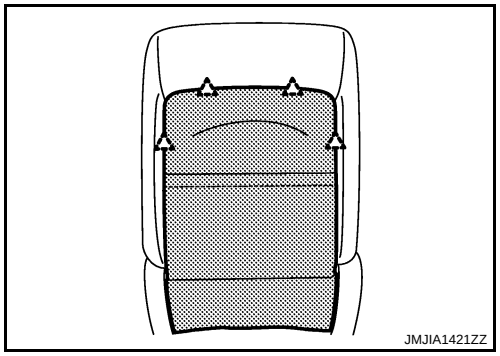

2. Disconnect the harness connectors and remove the harness clamps.
   - Remove the seatback trim retainer (1).

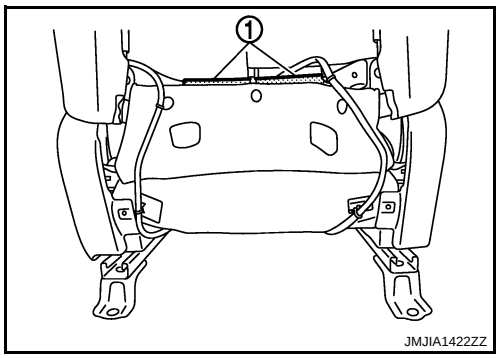

- Remove the seatback heater harness connector (A), lumbar support harness connector (B) (Driver's power seat only) and reclining motor harness connector (C).

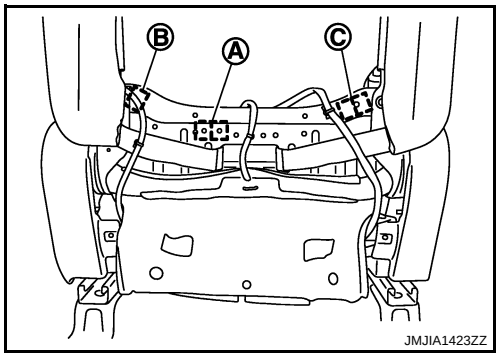

- Remove the side air bag module harness (A) and disconnect the seat cushion heater harness connector (B).

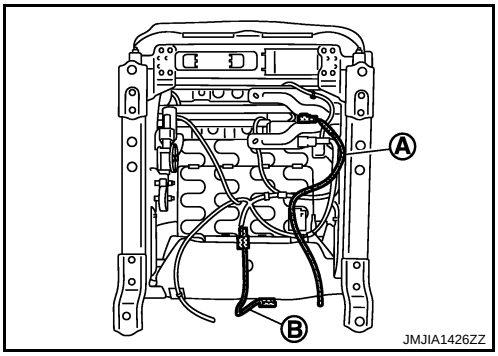

3. Remove the seatback assembly.
   - Remove the seatback mounting bolts (A), and then remove the seatback assembly.

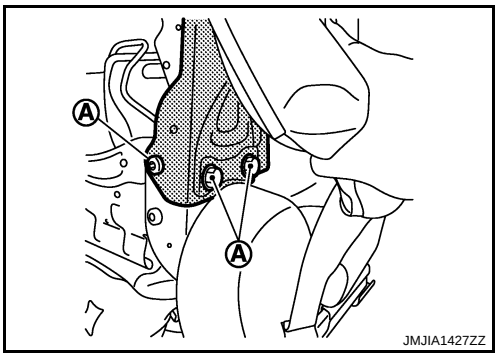

4. Remove the seat cushion front finisher. (Power seat only)
   - Remove the seat cushion front finisher mounting screws (A).
   - Remove the seat cushion front finisher mounting pawl.

   : Pawl

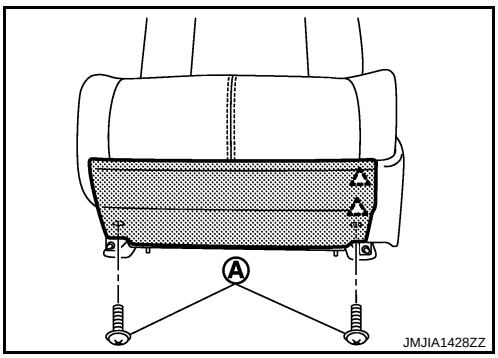

5. Remove the seat cushion outer finisher outside.

a. Power seat
   - Remove the seat control switch knob and reclining switch knob and lumbar support switch.
   - Remove the seat cushion outer finisher mounting screw (A), metal clips and pawls.

   : Metal clip

   : Pawl

   - Disconnect the seat control switch, reclining switch and lumbar support switch harness connectors (Driver's seat only).

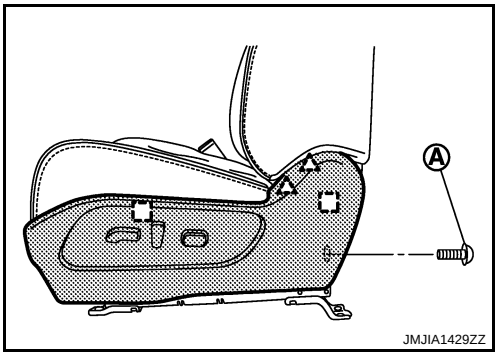

b. Manual seat

- Remove the pawls, and then lifter lever knob finisher (1). (Driver's manual seat only)

  : Pawl

- Remove the mounting screws, and remove the lifter lever (2). (Driver's manual seat only)

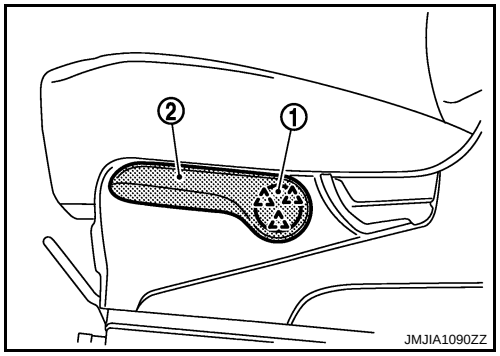

- Pull out the reclining lever while holding and raising the pawl.

  : Pawl

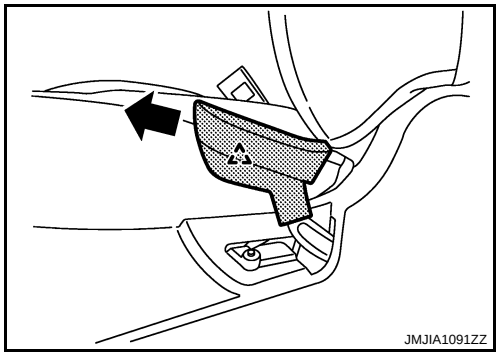

- Remove the mounting screws (A).
- Remove the metal clip and pawls, and then pull out seat cushion outer finisher outside.

  :Metal clip

  : Pawl

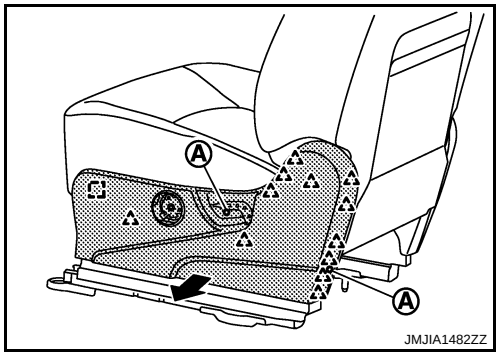

6. Remove the seat cushion outer finisher inside (left).
   - Remove the mounting screw (A).

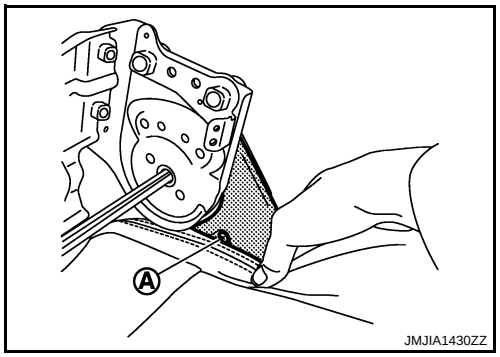

7. Remove the seat slide outer cover (Driver's seat only) mounting screws (A), and then slide to backward.

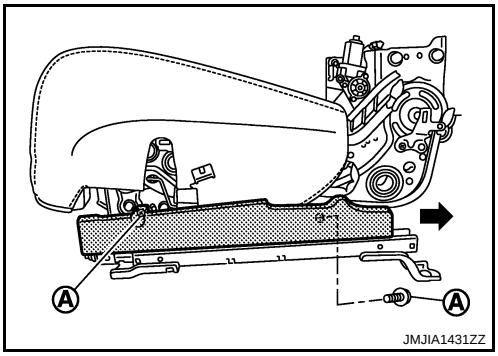

8. Remove the mounting screw (A) and pawls, and then pull out seat cushion inner finisher outer.

: Pawl

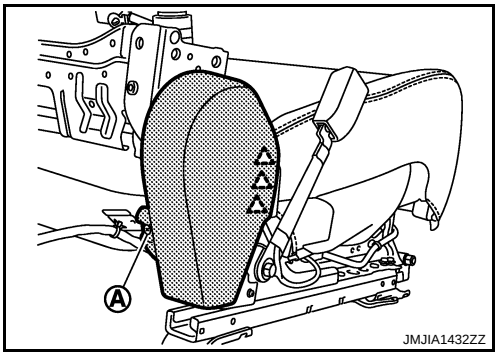

9. Remove the mounting screw (A), and then pull out seat cushion inner finisher inside (right).

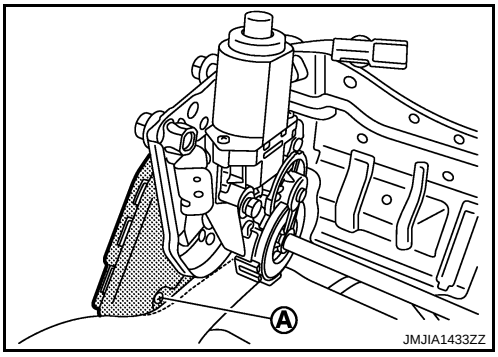

10. Remove the mounting screws (A), and then pull out seat slide inner cover. (Driver's seat only)

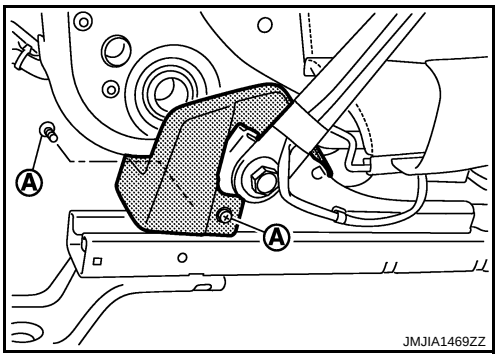

11. Remove the seat cushion trim and seat cushion pad. (Without occupant classification system control unit model)
    - Remove the seat cushion trim retainer.
    - Remove the seat cushion trim and seat cushion pad from the seat cushion frame.
    - Remove the hog rings, and separate the seat cushion trim and seat cushion pad.
12. Remove the seat belt buckle. SB-7, "SEAT BELT BUCKLE : Exploded View"
13. Remove the driver seat control unit. ADP-204, "Exploded View"

Assembly

Assemble in the reverse order of disassembly.

CAUTION:
Install the hog rings of seat cushion trim in position, and then securely connect the trim or trim cord with the pad side wire.

REAR SEAT

Exploded View

INFOID:0000000003396993

REAR SEAT (LH SIDE)

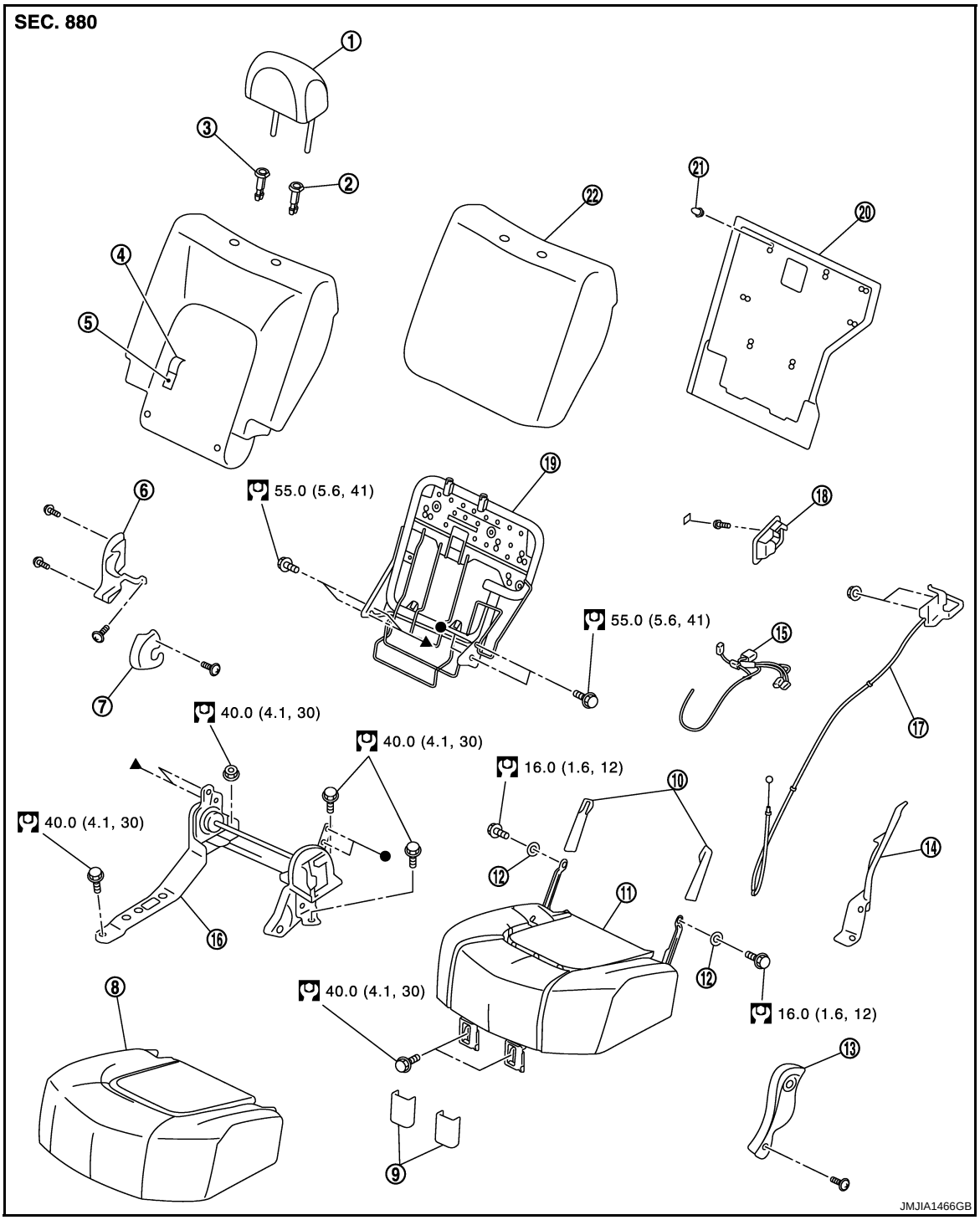

1. Headrest (LH)	2. Headrest holder (locked)	3. Headrest holder (free)
4. Seatback trim	5. Seatback pad	6. Reclining device inner cover (outside)
7. Reclining device inner cover (inside)	8. Seat cushion trim	9. Seat cushion hinge cover
10. Seat cushion link cover	11. Seat cushion pad and frame	12. Seat cushion link bush
13. Reclining device outer cover	14. Reclining cover	15. Rear seat harness (LH)

16. Reclining device assembly
17. Seatback control cable
18. Seatback control lever escutcheon
19. Seatback frame
20. Seatback board
21. Seatback board clip
22. Seatback silencer

Refer to GI-4, "Components"for symbols in the figure.

REAR SEAT (RH SIDE)

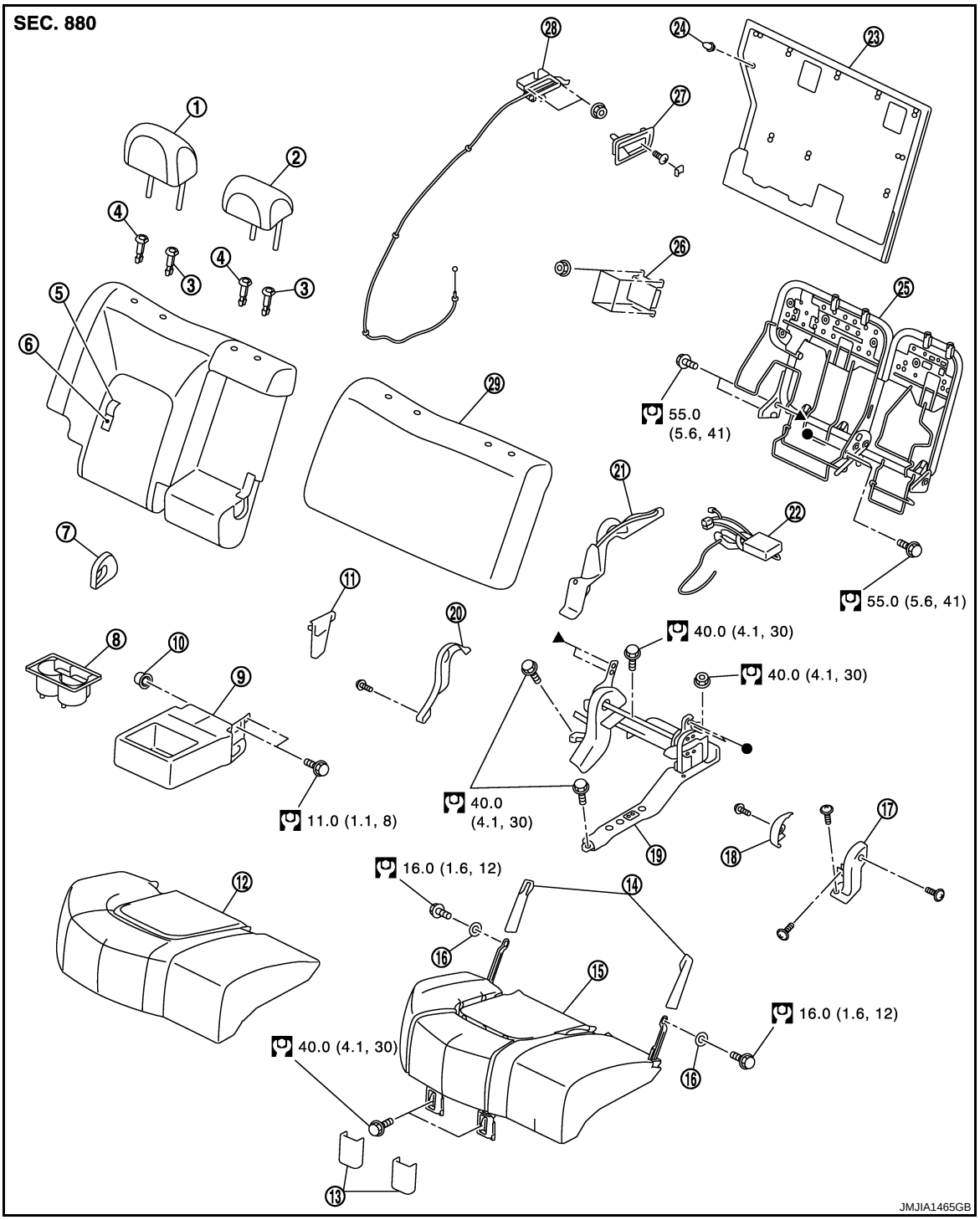

1. Headrest (RH)
2. Headrest (center)
3. Headrest holder (locked)
4. Headrest holder (free)
5. Seatback trim
6. Seatback pad
7. Armrest inner cover
8. Cup holder
9. Armrest
10. Armrest bush
11. Armrest outer cover
12. Seat cushion trim
13. Seat cushion hinge cover
14. Seat cushion link cover
15. Seat cushion pad and frame

16. Seat cushion link bush
17. Reclining device inner cover (outside)
18. Reclining device inner cover (inside)
19. Reclining device assembly
20. Reclining device outer cover
21. Reclining cover
22. Rear seat harness (RH)
23. Seatback board
24. Seatback board clip
25. Seatback frame
26. Dynamic dumper
27. Seatback control lever escutcheon
28. Seatback control cable
29. Seatback silencer

Refer to GI-4, "Components"for symbols in the figure.

Removal and Installation

INFOID:0000000003396994

REMOVAL

CAUTION:

When removing and installing, use shop cloths to protect parts from damage.

1. Remove the seat mounting bolts and nuts.
   - Pull up the luggage floor finisher front (1).
   - Remove the seat mounting bolt (A) and nut (B).

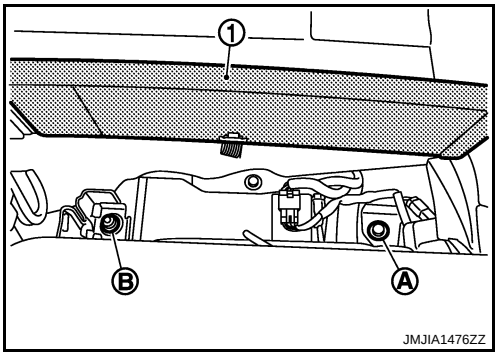

2. Disconnect the rear seat harness connector (A) and heater unit harness connector (B). (Power return seat and heater seat model only)

a. LH side

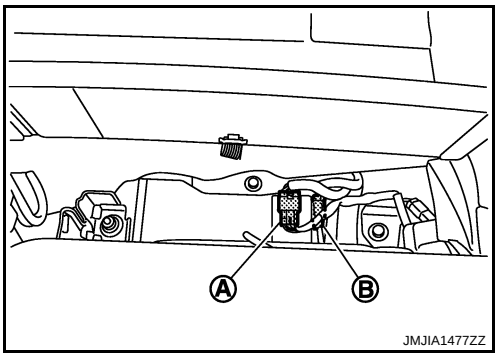

b. RH side

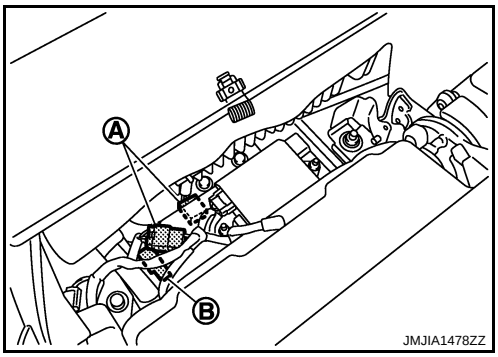

3. Remove the reclining cover.

4. Remove the seatback control cable (1) from reclining device assembly and seat mounting bolt (A).

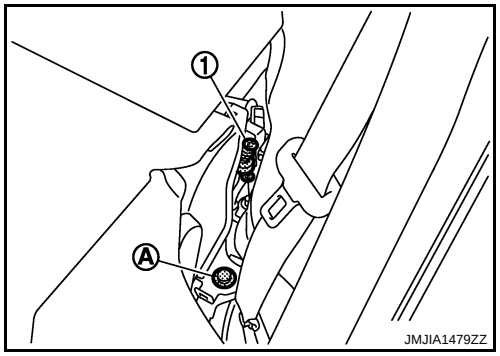

5. Remove the seat cushion hinge cover.
6. Remove the rear seat mounting bolts (A).

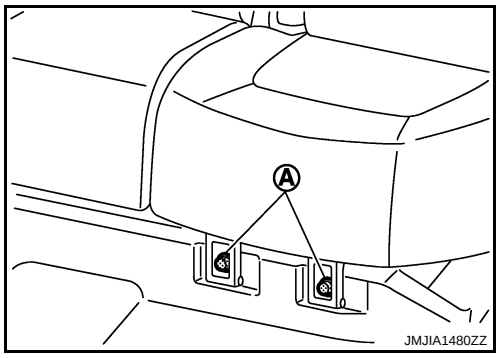

7. Pull up the seat cushion and remove the seat mounting bolt (A).

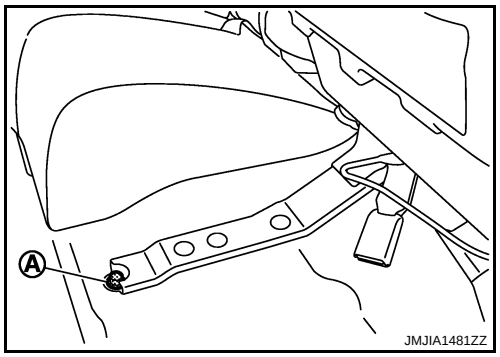

8. Remove the rear seat assembly from back door.

INSTALLATION

NOTE:

Tighten rear seat mouniting bolts and nuts following the numerical order shown in the figure.

1. Install the rear seat mounting bolt on behind the seatback (out side) and nut on behind the seatback (inside).
2. Install the rear seat mounting bolt on the seat cushion out side.

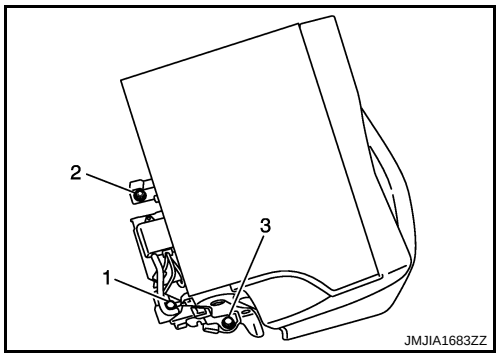

3. Connect the rear seat harness connector and heater harness connector. (Power return seat and heater seat only)

4. Install the rear seat mounting bolt on the reclining device extension bracket.

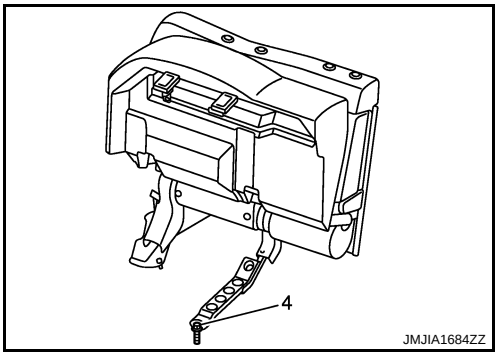

5. Install the rear seat mounting bolt and on the seat cushion hinge.

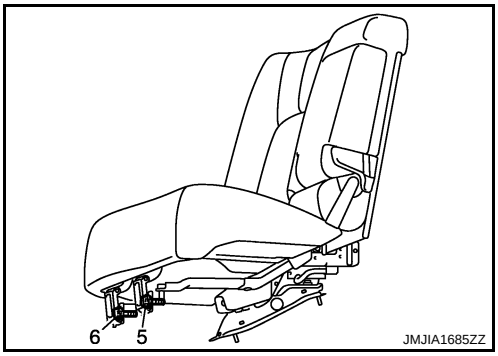

6. Connect the seatback control cable.
7. Install the seat cushion hinge cover.
8. Install the reclining cover.

CAUTION:
- **When removing and installing, use shop cloths to protect parts from damage.**
- **When removing and installing, 2 workers are required so as to prevent it from dropping.**
- **Before installation, check that the rear seat harness and seatback control cable is not pressed by seat frame.**

Disassembly and Assembly

INFOID:0000000003396995

SEATBACK

Disassembly

1. Remove the armrest. (RH seat only)
   - Remove the armrest outer cover.

: Pawl

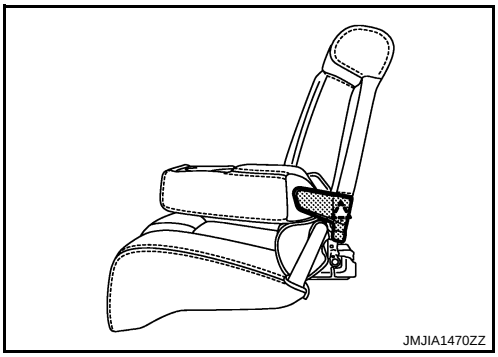

- Remove the armrest mounting bolts (A), and then slide the armrest to toward the arrow direction.

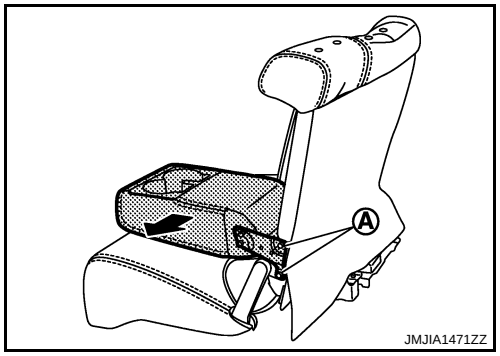

2. Separate the seatback assembly and seat cushion assembly.
   - Disconnect the seat cushion heater unit harness connectors (A) and remove the harness clamps. (with heater seat model only)

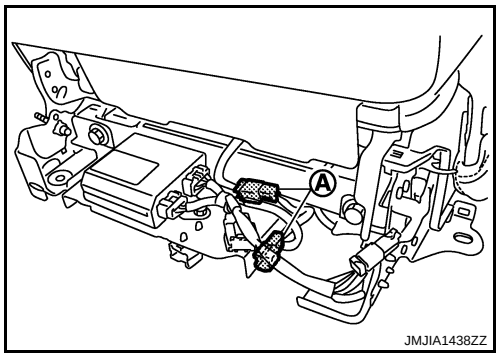

   - Remove the seat cushion link cover.

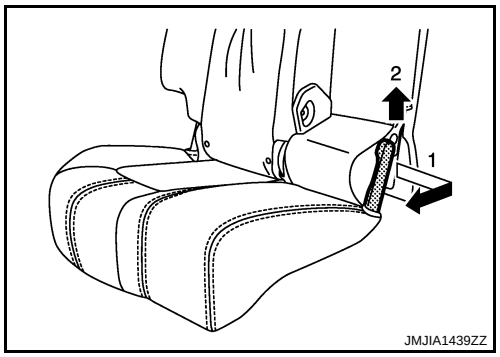

   - Remove the mounting bolt (A), and then separate the seat-back assembly and seat cushion assembly.

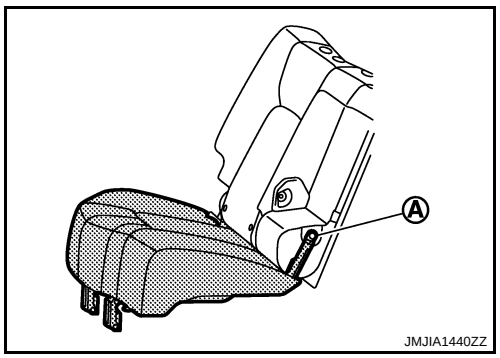

3. Remove the mounting screw (A), and then remove the reclining device outer cover.

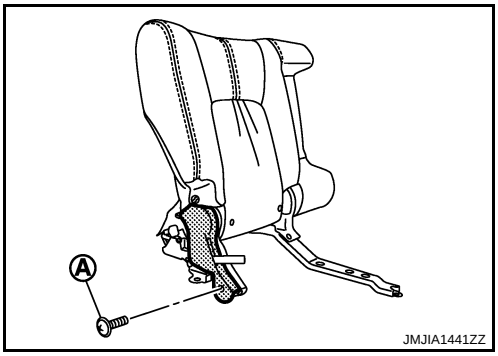

4. Remove the mounting screws (A), and then remove the reclining device inner cover (outside). (LH seat)

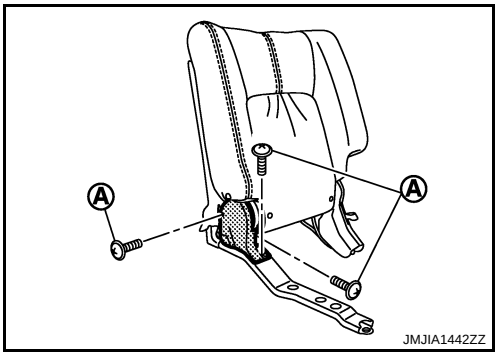

5. Remove the seatback trim and pad.
   - Remove the clips, and then pull out the seatback board.

     : Clip

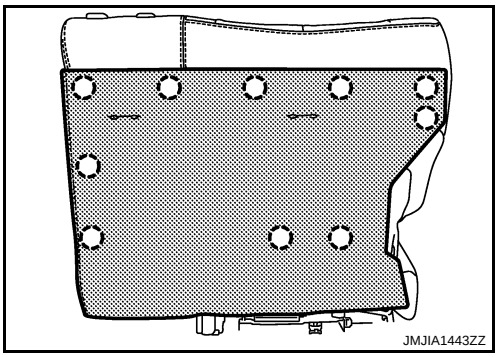

   - Remove the seatback trim fixing hog rings and retainer.
   - Remove the headrest holder.

     CAUTION:

     Before installing headrest holder check its orientation. (front/rear and right/left)
   - Remove the seatback trim and pad from seatback frame.
   - Remove the hog rings to separate the seatback trim and seat-back pad.

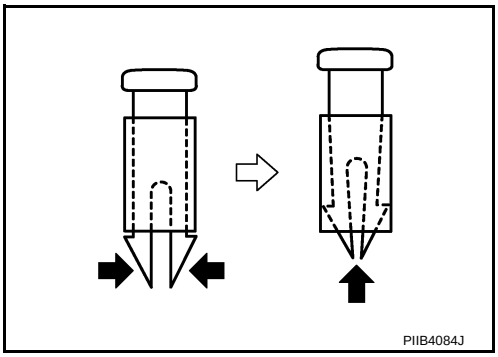

6. Remove the seatback silencer.

7. Remove the screws (A), and then remove the reclining device inner cover (outside). (RH seat)

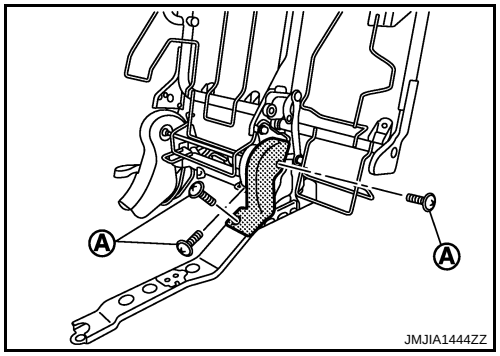

8. Remove the screw (A), and then remove the reclining device inner cover (inside).

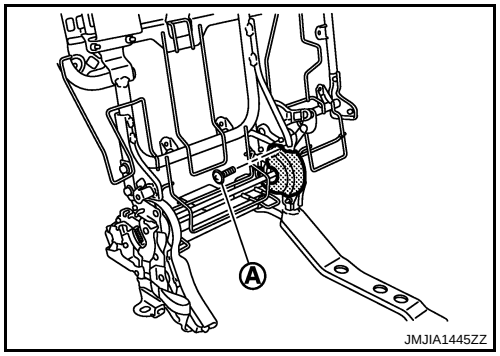

9. Remove the mounting bolts (A), and then remove the seatback frame from reclining device assembly.

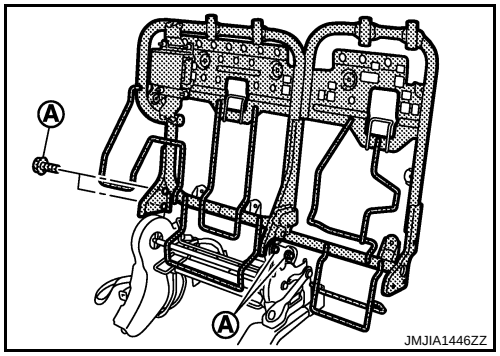

10. Remove the mounting nuts (A), and then remove the dynamic dumper. (With top road sunroof model only)

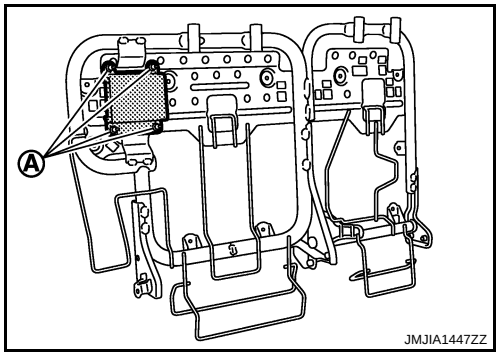

Assembly

Assemble in the reverse order of disassembly.

CAUTION:

Install the hog rings of seatback trim in position, and then securely connect the trim or trim cord with the seatback frame.

SEAT CUSHION

Disassembly

1. Remove the armrest. (RH seat only)

- Remove the pawl, and then pull out armrest outer cover.

  : Pawl

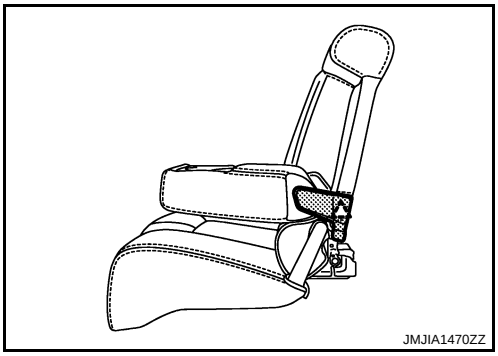

- Remove the mounting bolts (A), and then slide the armrest to outside.

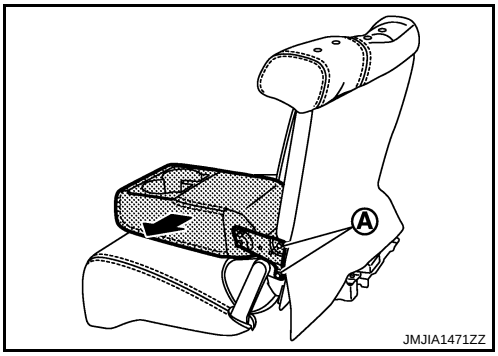

2. Separate the seatback assembly and seat cushion assembly.
   - Disconnect the seat cushion heater unit harness connectors (A) and remove the harness clamps. (with heater seat model only)

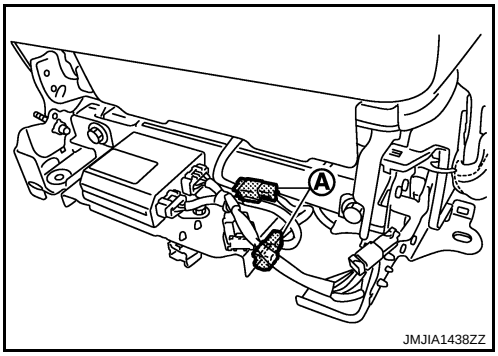

   - Remove the seat cushion link cover.

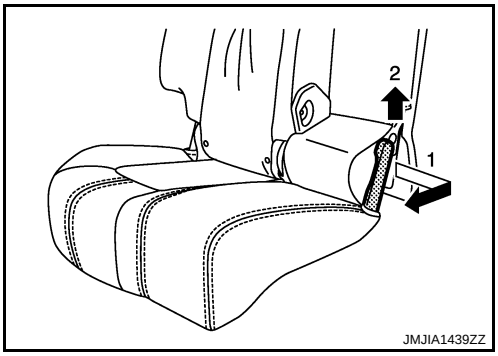

- Remove the mounting bolt (A), and then separate the seat-back assembly and seat cushion assembly.

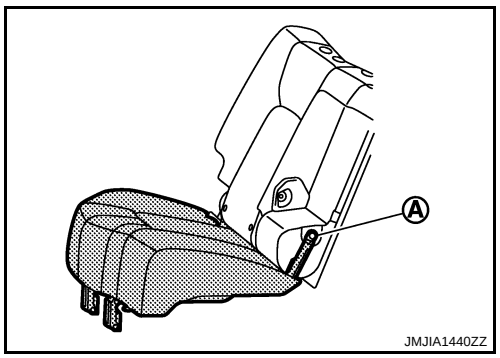

3. Remove the seat cushion trim.
   Remove the seat cushion trim fixing retainers and hog rings, and then remove the seat cushion trim from seat cushion pad and frame.

Assembly

Assemble in the reverse order of disassembly.

CAUTION:

Install the hog rings of seat cushion trim in position, and then securely connect the trim or trim cord with the seat cushion pad wire.

SEATBACK CONTROL CABLE

Exploded View

INFOID:0000000003639920

REAR SEAT (LH SIDE)

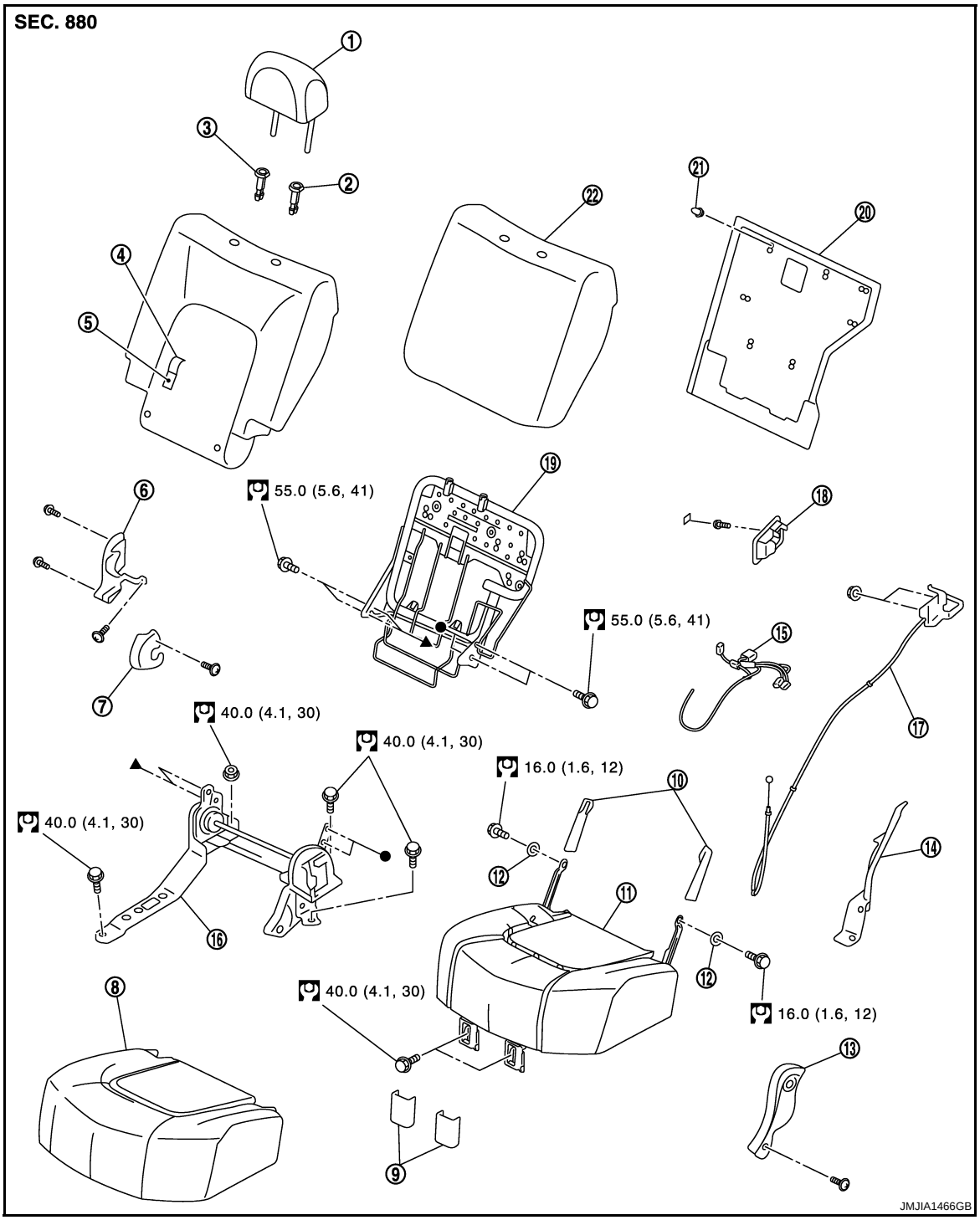

1. Headrest (LH)	2. Headrest holder (locked)	3. Headrest holder (free)
4. Seatback trim	5. Seatback pad	6. Reclining device inner cover (outside)
7. Reclining device inner cover (inside)	8. Seat cushion trim	9. Seat cushion hinge cover
10. Seat cushion link cover	11. Seat cushion pad and frame	12. Seat cushion link bush
13. Reclining device outer cover	14. Reclining cover	15. Rear seat harness (LH)

16. Reclining device assembly
17. Seatback control cable
18. Seatback control lever escutcheon
19. Seatback frame
20. Seatback board
21. Seatback board clip
22. Seatback silencer

Refer to GI-4, "Components"for symbols in the figure.

REAR SEAT (RH SIDE)

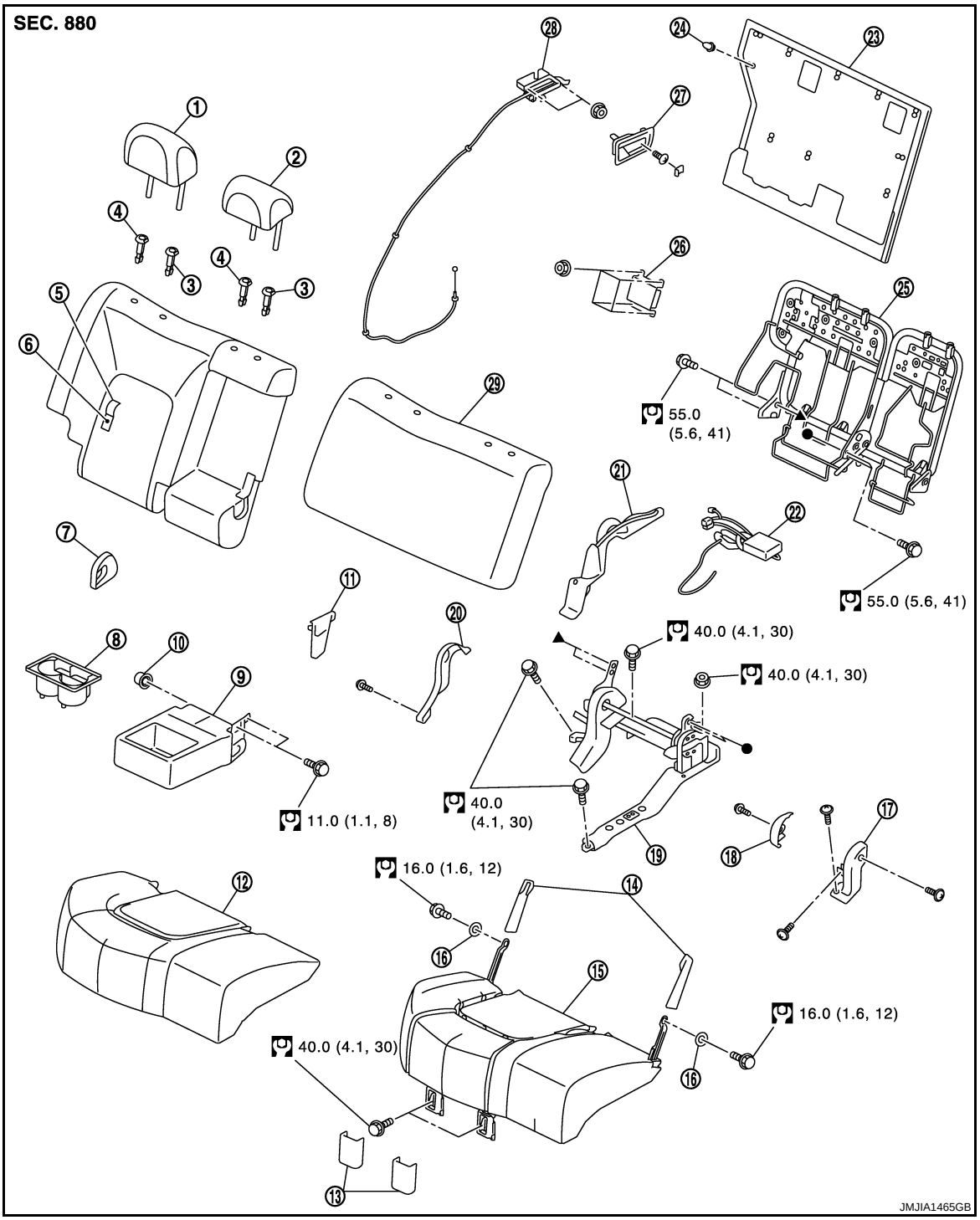

1. Headrest (RH)
2. Headrest (center)
3. Headrest holder (locked)
4. Headrest holder (free)
5. Seatback trim
6. Seatback pad
7. Armrest inner cover
8. Cup holder
9. Armrest
10. Armrest bush
11. Armrest outer cover
12. Seat cushion trim
13. Seat cushion hinge cover
14. Seat cushion link cover
15. Seat cushion pad and frame

16. Seat cushion link bush
17. Reclining device inner cover (outside)
18. Reclining device inner cover (inside)
19. Reclining device assembly
20. Reclining device outer cover
21. Reclining cover
22. Rear seat harness (RH)
23. Seatback board
24. Seatback board clip
25. Seatback frame
26. Dynamic dumper
27. Seatback control lever escutcheon
28. Seatback control cable
29. Seatback silencer

Refer to GI-4, "Components"for symbols in the figure.

Removal and Installation

INFOID:0000000003396997

REMOVAL

1. Remove the seatback control lever escutcheon.
2. Remove the luggage side lower finisher. Refer to INT-34, "Removal and Installation".
3. Remove the rear seat assembly. Refer toSE-116, "Removal and Installation"
4. Remove the mounting nuts (A), and then remove the seatback control lever.

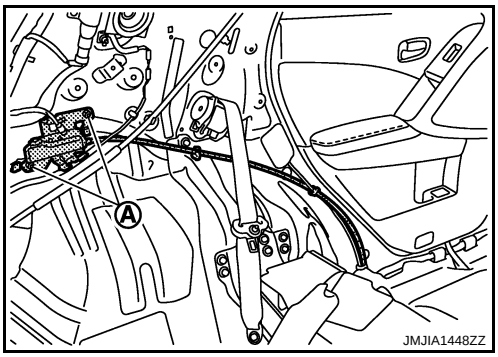

5. Remove the rear seat mount bracket.
   - Remove the seat mount bracket mounting bolts (A) and nuts (B).
   - Remove the seatback control cable bush (1).
   - Remove the seatback control cable from the vehicle.

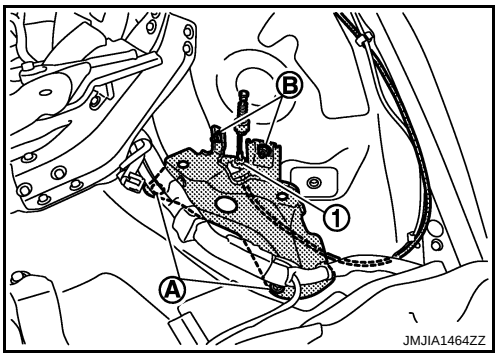

INSTALLATION

Install in the reverse order of removal.

REAR SEAT BACK POWER RETURN CONTROL UNIT

Exploded View

INFOID:0000000003396998

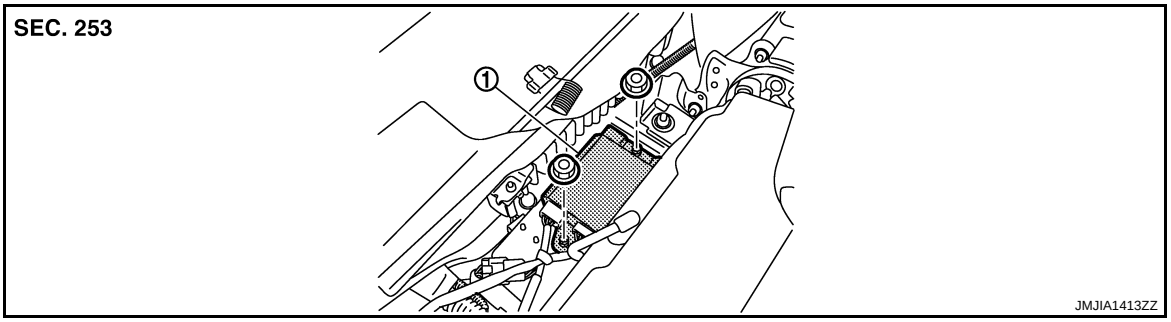

1. Rear seatback power return control unit

Removal and Installation

INFOID:0000000003396999

REMOVAL

CAUTION:

When removing and installing, use shop cloths to protect parts from damage.

1. Remove mounting nuts (A).
2. Remove rear seatback power return control unit (1).

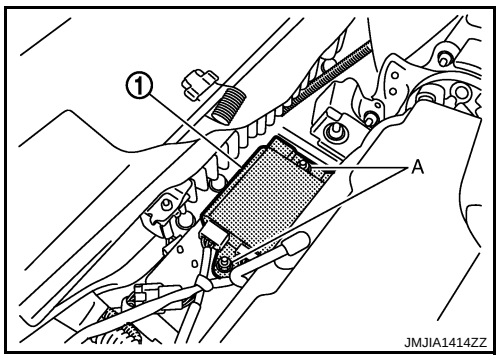

INSTALLATION

Install in the reverse order of removal.

CAUTION:

Be sure to clump the harness to the right place.

POWER SEAT SWITCH

Exploded View

INFOID:0000000003465393

Refer to SE-99, "Exploded View".

Removal and Installation

INFOID:0000000003465394

REMOVAL

CAUTION:
When removing and installing, use shop cloths to protect parts from damage.

1. Remove the seat cushion outer finisher (1). Refer to SE-106, "Removal and Installation".
2. Remove screws (A).
3. Remove the power seat switch (2) from the seat cushion outer finisher.

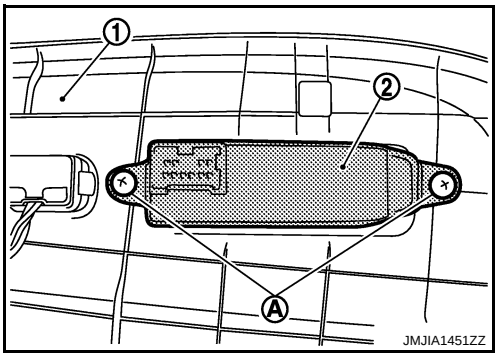

INSTALLATION

Install in the reverse order of removal.

CAUTION:
Be sure to clump the harness to the right place.

LUMBAR SUPPORT SWITCH

Exploded View

INFOID:0000000003465395

Refer to SE-99, "Exploded View".

Removal and Installation

INFOID:0000000003465396

REMOVAL

CAUTION:

When removing and installing, use shop cloths to protect parts from damage.

1. Remove the seat cushion outer finisher (1). Refer to SE-106, "Removal and Installation".
2. Remove the lumbar support switch (2) from the seat cushion outer finisher. With flat bladed screw driver (A).

: Pawl

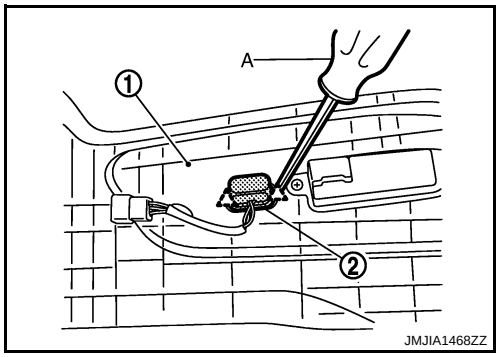

INSTALLATION

Install in the reverse order of removal.

CAUTION:

Be sure to clump the harness to the right place.

HEATED SEAT SWITCH

FRONT SEAT

FRONT SEAT : Exploded View

INFOID:0000000003451775

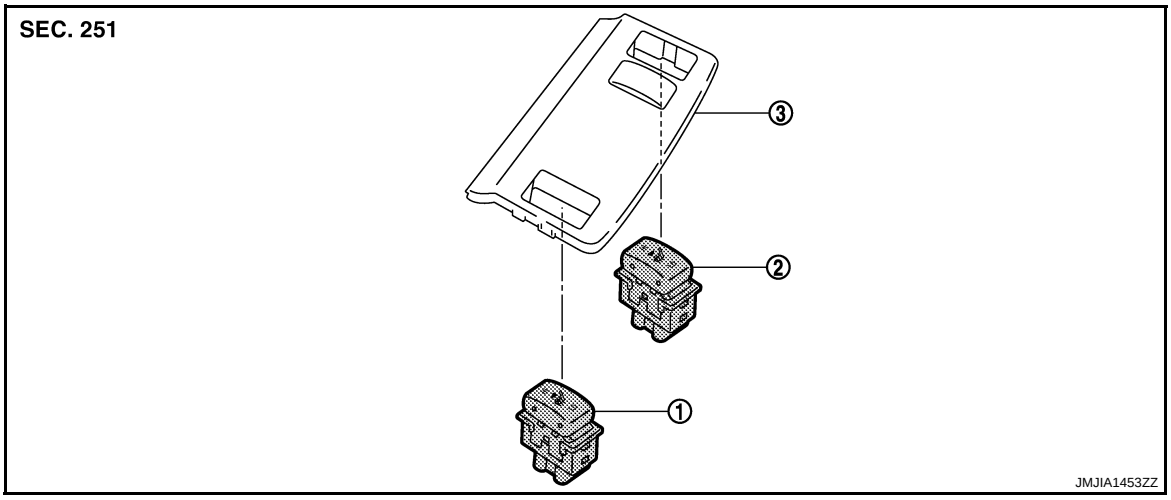

1. Front heated seat switch (driver side)
2. Front heated seat switch (passenger side)
3. Console switch finisher

FRONT SEAT : Removal and Installation

INFOID:0000000003451776

REMOVAL

CAUTION:

When removing and installing, use shop cloths to protect from damage.

1. Remove the console switch finisher (1). Refer to IP-19, "Exploded View"
2. Remove front heated seat switch (driver side) (2) from console switch finisher. With flat bladed screw driver (A).

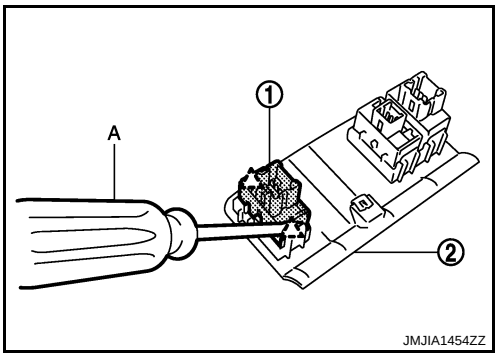

: Pawl

NOTE:

The same procedure is also performed for passenger side.

INSTALLATION

Install in the reverse order of removal.

REAR SEAT

REAR SEAT : Exploded View

INFOID:0000000003451777

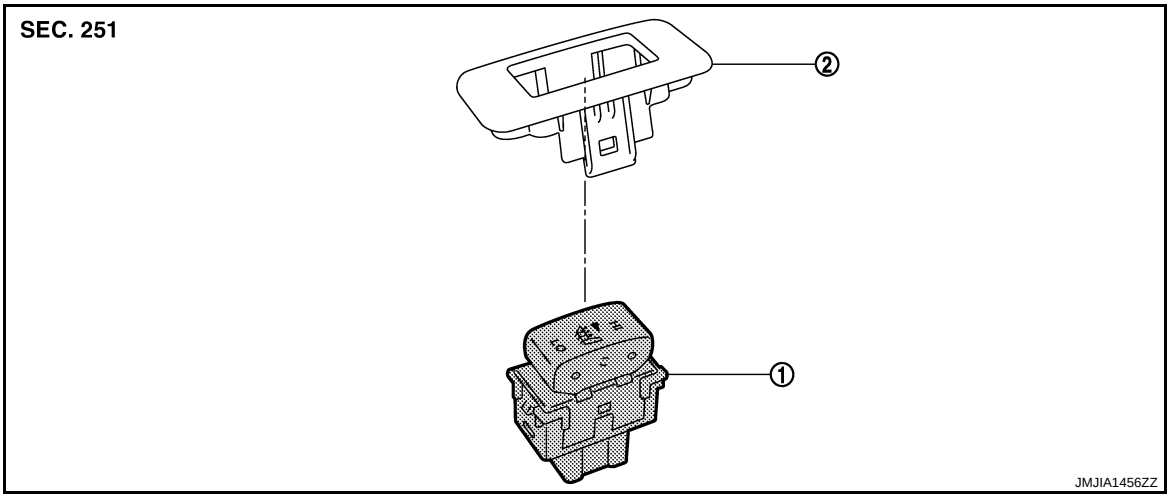

1. Rear heated seat switch
2. Heated seat switch finisher

REAR SEAT : Removal and Installation

INFOID:0000000003451778

REMOVAL

CAUTION:

When removing and installing, use shop cloths to protect parts from damage.

1. Remove the heated seat switch finisher (2). Refer to INT-15, "REAR DOOR FINISHER : Exploded View"
2. Remove rear heated seat switch (1) from heated seat switch finisher. With flat bladed screw driver (A).

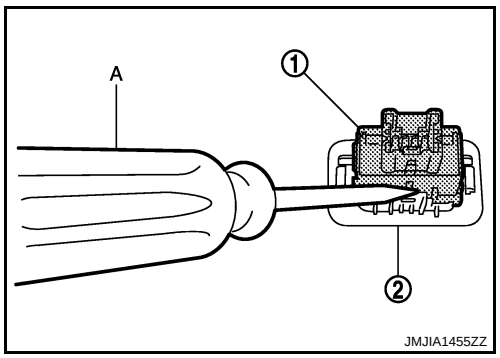

: Pawl

INSTALLATION

Install in the reverse order of removal.

FRONT POWER RETURN SWITCH

Exploded View

INFOID:0000000003451779

Refer to IP-11, "Exploded View".

Removal and Installation

INFOID:0000000003451780

REMOVAL

CAUTION:

When removing and installing, use shop cloths to protect parts from damage.

1. Remove the instrument lower panel (LH) (1). Refer to IP-12, "Removal and Installation"
2. Remove front power return switch (1) from switch bracket. With flat bladed screw driver (A).

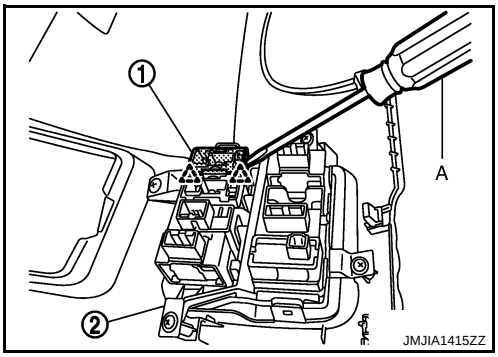

: Pawl

INSTALLATION

Install in the reverse order of removal.

REAR POWER RETURN SWITCH

Exploded View

INFOID:0000000003451781

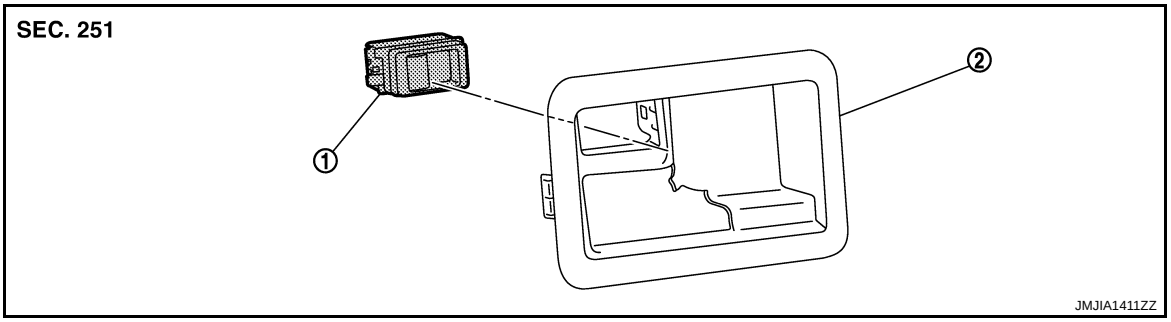

1. Rear power return switch
2. Seatback control lever escutcheon

Removal and Installation

INFOID:0000000003451782

REMOVAL

CAUTION:

When removing and installing, use shop cloths to protect parts from damage.

1. Remove the seatback control lever escutcheon.
2. Remove rear power return switch (1) from seatback control lever escutcheon. With flat bladed screw driver (A).

: Pawl

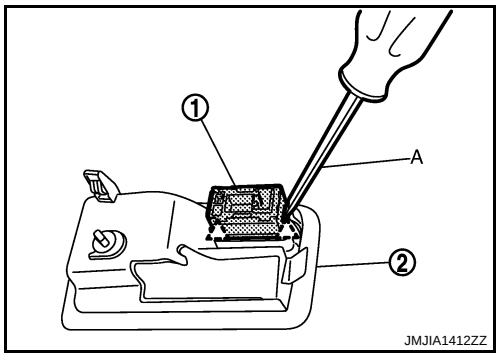

INSTALLATION

Install in the reverse order of removal.

AUTOMATIC DRIVE POSITIONER CONTROL UNIT

Exploded View

INFOID:0000000003566162

Refer to IP-11, "Exploded View".

Removal and Installation

INFOID:0000000003566163

REMOVAL

CAUTION:

When removing and installing, use shop cloths to protect parts from damage.

1. Remove the instrument driver lower panel. Refer to IP-12, "Removal and Installation".
2. Remove a screw (A).
3. Remove automatic drive positioner control unit (1).

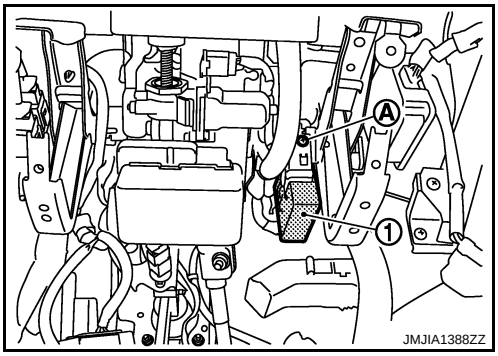

INSTALLATION

Install in the reverse order of removal.

CAUTION:

Be sure to clump the harness to the right place.

TILT&TELESCOPIC SWITCH

Exploded View

INFOID:0000000003566160

Refer to IP-11, "Exploded View".

Removal and Installation

INFOID:0000000003566161

REMOVAL

CAUTION:

When removing and installing, use shop cloths to protect parts from damage.

1. Remove the steering column mask (1). Refer to IP-12, "Removal and Installation".
2. Press pawls and remove tilt & telescopic switch (2) from the steering column mask.

: Pawl

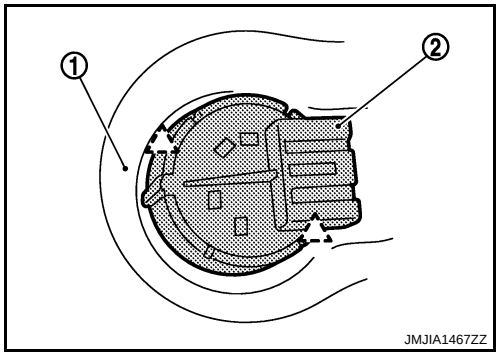

INSTALLATION

Install in the reverse order of removal.

CAUTION:

Be sure to clump the harness to the right place.