SUBARU®

XT

1988 SERVICE MANUAL

SECTION 1

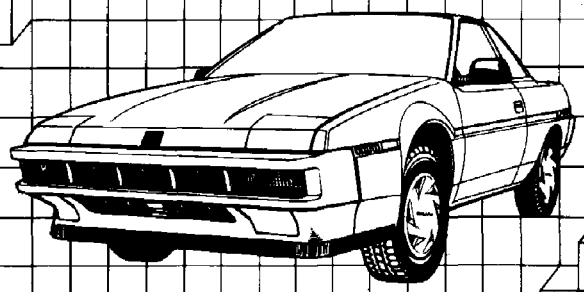

FUJI HEAVY INDUSTRIES LTD.

FOREWORD

This service manual has been prepared to provide SUBARU service personnel with the necessary information and data for the correct maintenance and repair of SUBARU XT.

The manual includes the procedures for maintenance, disassembling, reassembling, inspection and adjustment of components and trouble-shooting for guidance of both the fully qualified and the less-experienced mechanics.

Please peruse and utilize this manual fully to ensure complete repair work for satisfying our customers by keeping their vehicles in optimum condition. When replacement of parts during repair work is needed, be sure to use SUBARU genuine parts.

All information, illustrations and specifications contained in this manual are based on the latest product information available at the time of publication approval.

We reserve the right to make changes at any time without prior notice.

FUJI HEAVY INDUSTRIES LTD.

How to use this manual

This service manual is divided into four volumes. Each volume consists of Section 1, Section 2, 3, Section 4, 5, and Section 6 respectively.

Each chapter, beginning with the Engine section, is basically made up of the following five areas.

1. Mechanism and function
2. Specifications and service data
3. Component parts
4. Service procedure
5. Trouble-shooting

"ABBREVIATION LIST" is provided at the back page of quick reference index in each volume.

"ALPHABETICAL INDEX" is also provided at the last page in each volume.

This service manual applies to SUBARU XT, and explains all equipments including factory options. Therefore, you may find some explanations for equipments not installed on the vehicle.

SUBARU, and are registered trademarks of FUJI HEAVY INDUSTRIES LTD.
© Copyright 1987 FUJI HEAVY INDUSTRIES LTD. All rights reserved.

Not to be reproduced in whole or in part without the prior written permission
of FUJI HEAVY INDUSTRIES LTD., TOKYO JAPAN.

TABLE OF CONTENTS

1 GENERAL SECTION	1–1 Specifications 1–2 ★ ★ ★ ★ ★ ★ ★ ★ ★ ★ ★ ★ ★ 1–3 General Information 1–4 Pre-Delivery Inspection 1–5 Periodic Maintenance Services 1–6 Special Tools
2 ENGINE SECTION	2–1 Emission Control System and Vacuum Fitting 2–2 On-Car Services 2–3 Engine 2–4 Engine Lubrication System 2–5 Engine Cooling System 2–6 ★ ★ ★ ★ ★ ★ ★ ★ ★ ★ ★ ★ ★ 2–7 Fuel Injection System 2–8 Fuel System 2–9 Exhaust System 2–10 Clutch 2–11 Engine and Transmission Mounting System
3 TRANSMISSION AND DIFFERENTIAL SECTION	3–1 Manual Transmission and Differential 3–2 Automatic Transmission and Differential 3–3 Transmission Control System 3–4 4WD System
4 MECHANICAL COMPONENTS SECTION	4–1 Suspension 4–2 Wheels and Axles 4–3 Steering System 4–4 Brakes 4–5 Pedal System and Control Cables 4–6 Heater and Ventilator 4–7 Air Conditioning System
5 BODY SECTION	5–1 Body and Exterior 5–2 Doors and Windows 5–3 Seats, Seat Belts, and Interior 5–4 Instrument Panel
6 ELECTRICAL SECTION	6–1 Engine Electrical System 6–2 Body Electrical System 6–3 Wiring Diagram and Trouble-shooting

SUBARU

1988

SERVICE MANUAL

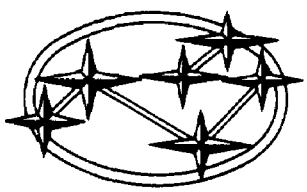

1 GENERAL SECTION

SPECIFICATIONS 1-1

* * * * * * * * * * * * * 1-2

GENERAL INFORMATION 1-3

PRE-DELIVERY INSPECTION 1-4

PERIODIC MAINTENANCE SERVICES 1-5

SPECIAL TOOLS 1-6

ABBREVIATION LIST

A/C	Air Conditioner
ACC	Accessory
A/C pulley	Air Conditioner compressor pulley
ALT pulley	Alternator pulley
API	American Petroleum Institute
Approx	Approximately
ASSY	Assembly
ASV	Air Suction Valve
AT	Automatic Transmission
ATF	Automatic Transmission Fluid
BILEV	Bi-level
BJ	Bell Joint
BP	British Petroleum
BTDC	Before Top Dead Center
Calif.	California
Carb.	Carburetor
CP	Complete
C/P	Crankshaft Pulley
CTR	Center
CVJ	Constant Velocity Joint
CW	Curb Weight
DIFF	Differential
DOJ	Double Offset Joint
D/R	Dual-range
DSPD	Dry Single Plate Diaphragm
ECS	Electric Control System
EGR	Exhaust Gas Recirculation
FF drive	Front wheel drive (2WD)
FMVSS	Federal Motor Vehicle Safety Standards
GVWR	Gross Vehicle Weight Rating
HI	High (Speed)
HP	Horse Power
IG-COIL	Ignition Coil
IG SWITCH	Ignition Switch
INT	Intermittent (Wiper)
I/P	Idler Pulley
LH	Left-hand
LO	Low (Speed)
LSD	Limited Slip Differential
MPFI	Multi Point Fuel Injection
MT	Manual Transmission
PCV	Positive Crankcase Ventilation
PHV	Pressure Holding Valve
P/N	Parts Number
P/S pulley	Power Steering oil pump pulley
RAD FAN	Radiator Fan
R-DEF	Rear Defogger
RH	Right-hand
SAE	Society of Automotive Engineers Inc.
S/R	Single-range
TC	Torque Converter
TEMP GAUGE	Temperature Gauge
TP	Theft Prevention
VGR	Variable Gear Ratio
VIN	Vehicle Identification Number
W/height control	With height control
W/P pulley	Water Pump pulley

INDEX

Air Cleaner 1-4- 9
Air Filter Elements
(Air cleaner, PCV air filter) 1-5-16
Automatic Transmission Fluid 1-5-19
Automatic Transmission Fluid (ATF) Level 1-4-24
Battery Fluid Level and Battery
Installation 1-4- 6
Brake Fluid 1-5-20
Brake Fluid Level and Brake Piping
Installation 1-4- 5
Brake Lining and Drum 1-5-24
Camshaft Drive Belt 1-5- 6
Clutch and Hill-holder System 1-5-28
Coolant Level and Cooling Fan Installation 1-4- 6
Disc Brake Pad and Disc/Front and Rear
Axle Boots 1-5-22
Door Operation, Door lock and Regulator 1-4- 4
Drive Belt(s) [Except Camshaft]
(Inspect drive belt tension) 1-5- 3
Driving Test 1-4-21
Engine Oil 1-5- 9
Engine Oil Filter 1-5-11
Engine Oil Level 1-4- 7
Exhaust Pipe and Muffler 1-4-16
External Appearance and Equipment 1-4-27
Fuel 1-3-13
Fuel System for Leakage 1-4-16
Fuses 1-4-13
General Precautions 1-3- 2
Grease on Front and Rear Wheel Bearings 1-5-38
Height Control System
..... Air (Pneumatic) Suspension Vehicle 1-4-18
Hood Operation 1-4- 3
Identification Number and Label Locations 1-3- 9
Inspect Brake Line and Check Operation of
Parking and Service Brake System 1-5-25
Installation of Steering Components 1-4-15
Jack Installation 1-4-10
Lifting, Towing and Tie-down Points 1-3-18
Lights and Switches 1-4-13
Lubricants 1-3-13
Operation of Indicator Lights and Gauges 1-4-19
Power Steering Fluid Level 1-4-25
Precautions in Handling a Full-Time 4WD
Vehicle 1-3- 3
Replace Engine Coolant and Inspect
Cooling System, Hoses and Connections 1-5-12
Replace Fuel Filter and Inspect
Fuel System Hoses and Connections 1-5-15
Sealants and Adhesives 1-3-16
Seat Adjuster and Seat Belts 1-4-11
Spark Plug 1-5-17
Steering and Suspension 1-5-30
Tachometer, Radio, Clock, etc. 1-4-20
Theft Prevention 1-3-11
Tightening Torque of Standard Bolts
and Nuts 1-3-17
Tilt/Telescopic Steering Column 1-4-18
Toe 1-4-25
Transmission and Differential Gear Oil Level 1-4- 8
Transmission/Differential (Front and rear)
Lubricants (Gear oil) 1-5-18
Trunk lid, Rear Gate and Fuel Lid Operation 1-4- 4
Underside 1-4-26
Vehicle Identification Numbers (V.I.N.) 1-3- 7
Water Leakage 1-4-27
Wheel Nuts for Looseness and Tire Inflation
Pressure 1-4-11
Windshield Washer and Windshield Wipers 1-4-10

SUBARU

1988

Page
XT 2

• XT

ITEM \ MODEL				1800				2700		
				FWD			4WD	FWD	4WD	
				DL	GL	GL	GL	XT6	Full time 4WD XT6	Full time 4WD XT6
				MPFI 5MT	MPFI 5MT	MPFI 4AT	MPFI 5MT S/R	MPFI 4AT	MPFI 5MT S/R	MPFI 4AT
Overall length			mm (in)	4,510 (177.6)						
Overall width			mm (in)	1,690 (66.5)						
Overall height			mm (in)	1,255 (49.4)			1,330 (52.4)	1,255 (49.4)	1,335 (52.6)	
Compartment	Leg room	Front Max.	mm (in)	1,100 (43.3)						
		Rear Min.	mm (in)	665 (26.2)						
	Head room	Front	mm (in)	950 (37.4)						
		Rear	mm (in)	875 (34.4)						
	Shoulder room		mm (in)	1,340 (52.8)						
Wheelbase			mm (in)	2,465 (97.0)						
Tread		Front	mm (in)	1,435 (56.5)			1,420 (55.9)	1,445 (56.9)	1,435 (56.5)	
		Rear	mm (in)	1,425 (56.1)					1,440 (56.7)	
Ground clearance			mm (in)	120 (4.7)			155 (6.1)	125 (4.9)	165 (6.5)	
Weight kg (lb)	Curb weight	U.S.A.	Front	*1 640 (1,410)	*2 650 (1,435)	*2 705 (1,555)	*2 680 (1,500)	*3 810 (1,785)	*3 790 (1,740)	*3 825 (1,820)
			Rear	*1 435 (965)	*2 455 (1,000)	*2 455 (1,005)	*2 510 (1,125)	*3 460 (1,010)	*3 510 (1,125)	*3 515 (1,135)
			Total	*1 1,075 (2,375)	*2 1,105 (2,435)	*2 1,160 (2,560)	*2 1,190 (2,625)	*3 1,270 (2,795)	*3 1,300 (2,865)	*3 1,340 (2,955)
		CANADA	Front	–	*1 640 (1,405)	*1 695 (1,525)	*1 670 (1,470)	*3 800 (1,765)	*3 785 (1,725)	*3 820 (1,805)
			Rear	–	*1 445 (985)	*1 450 (995)	*1 500 (1,105)	*3 455 (1,000)	*3 505 (1,115)	*3 510 (1,125)
			Total	–	*1 1,085 (2,390)	*1 1,145 (2,520)	*1 1,170 (2,575)	*3 1,255 (2,765)	*3 1,290 (2,840)	*3 1,330 (2,930)
	Gross vehicle weight		Front	740 (1,630)	870 (1,920)	870 (1,920)	885 (1,950)	925 (2,040)	945 (2,080)	945 (2,080)
			Rear	660 (1,460)	690 (1,520)	690 (1,520)	745 (1,640)	695 (1,530)	750 (1,660)	750 (1,660)
			Total	1,400 (3,090)	1,560 (3,440)	1,560 (3,440)	1,630 (3,590)	1,620 (3,570)	1,695 (3,740)	1,695 (3,740)
Seating capacity			persons	2	4					

*1: The weight of power steering is included.
*2: The weight of power steering and power window is included.
*3: The weight of air conditioner and cruise control is included.

ITEM \ MODEL			1800				2700		
			FWD			4WD	FWD	4WD	
			DL	GL	GL	GL	XT6	Full time 4WD XT6	Full time 4WD XT6
			MPFI 5MT	MPFI 5MT	MPFI 4AT	MPFI 5MT S/R	MPFI 4AT	MPFI 5MT S/R	MPFI 4AT
Engine type			Horizontally opposed, liquid cooled, 4-cylinder, 4-stroke gasoline engine with multi-point fuel injection				Horizontally opposed, liquid cooled, 6-cylinder, 4-stroke gasoline engine with multi-point fuel injection		
Valve arrangement			Overhead camshaft type						
Bore x stroke		mm (in)	92 x 67 (3.62 x 2.64)						
Displacement		cm^3 (cu in)	1,781 (108.68)				2,672 (163.05)		
Compression ratio			9.5:1						
Firing order			1-3-2-4				1-6-3-2-5-4		
Ignition timing at idling speed		BTDC/rpm *1	20° ± 2°/700		20° ± 2°/800	20° ± 2°/700	20° ± 2°/750		
Idling speed at neutral, N or P position		rpm	700 ± 100		800 ± 100	700 ± 100	750 ± 100		
Spark plug	Type and manufacturer		For U.S.A.: BPR6ES-11 (or BPR5ES-11, BPR7ES-11) ..... NGK W20EPR-U11 (or W16EPR-U11, W22EPR-U11) ..... Nippondenso RN9YC-4 (or RN11YC-4) ..... Champion For Canada: RN9YC-4 (or RN11YC-4) ..... Champion						
Maximum output		HP/rpm	97/5,200				145/5,200		
Maximum torque		N·m (kg-m, ft-lb)/rpm	139 (14.2, 103)/3,200				211 (21.5, 156)/4,000		
Battery	Type		50D20R (MF)		65D23R (MF)	50D20R (MF)	75D23R (MF)	55D23R (MF)	75D23R (MF)
	Reserve capacity	(min.)	78		111	78	111	99	111
	Cold cranking ampere	(amp.)	306		420	306	490	356	490
Alternator			12V - 65A				12V - 90A		
Clutch type			DSPD		TC	DSPD	TC	DSPD	TC
Transmission type			*2		*3	*2	*3	*2	*3
Gear ratio	1st		3.636		2.785	3.545	2.785	3.545	2.785
	2nd		2.105		1.545	2.111	1.545	1.947	1.545
	3rd		1.428		1.000	1.448	1.000	1.366	1.000
	4th		1.093		0.694	1.088	0.694	0.972	0.694
	5th		0.885		–	0.871	–	0.780	–
	Reverse		3.583		2.272	3.416	2.272	3.416	2.272

DSPD: Dry Single Plate Diaphragm
TC : Torque Converter

*1: With gear in neutral position (MT) or "P" position (AT)
*2: 5-forward speeds with synchromesh and 1-reverse
*3: Full automatic, 4-forwards and 1-reverse

ITEM \ MODEL			1800				2700		
			FWD			4WD	FWD	4WD	
			DL	GL	GL	GL	XT6	Full time 4WD XT6	Full time 4WD XT6
			MPFI 5MT	MPFI 5MT	MPFI 4AT	MPFI 5MT S/R	MPFI 4AT	MPFI 5MT S/R	MPFI 4AT
Reduction gear (Front drive)	Final reduction	Type of gear	Hypoid						
		Reduction gear ratio	3.700		3.900	3.700		3.900	3.700
Reduction gear (Rear drive)	Transfer reduction	Type of gear	–			Helical	–	Helical	–
		Reduction gear ratio	–			1.000	–	1.000	–
	Final reduction	Type of gear	–			Hypoid	–	Hypoid	
		Reduction gear ratio	–			3.700	–	3.900	3.700
Steering system	Type		Rack and pinion						
	Turns, lock to lock		4.8	3.5			3.2		
	Minimum turning circle m (ft)		9.7 (31.8) [at tire], 10.8 (35.4) [at bumper]				10.4 (34.1) [at tire] 11.3 (37.1) [at bumper]		
Suspension	Front		*1			*2	*1	*2	
	Rear		*3			*4	*3	*4	
Brake	Service brake system		Dual circuit hydraulic with vacuum suspended power unit						
	Front		Ventilated disc brake						
	Rear		Drum brake (Leading & trailing type)			Disc brake			
	Parking brake		Mechanical on front brake						
Tire	Size		165SR13	185/70HR13			195/60R14 85H	205/60R14 87H	
	Type		Steel belted radial, Tubeless						

*1: MacPherson strut type, Independent, Coil spring
*2: MacPherson strut type, Independent, Pneumatic suspension (CANADA: with height control)
*3: Semi-trailing arm type, Independent, Coil spring
*4: Semi-trailing arm type, Independent, Pneumatic suspension (CANADA: with height control)

ITEM			MODEL	1800				2700		
				FWD			4WD	FWD	4WD	
				DL	GL	GL	GL	XT6	Full time 4WD XT6	Full time 4WD XT6
				MPFI 5MT	MPFI 5MT	MPFI 4AT	MPFI 5MT S/R	MPFI 4AT	MPFI 5MT S/R	MPFI 4AT
Capacity	Fuel tank		ℓ (US gal, Imp gal)	60 (15.9, 13.2)						
	Engine oil	Upper level	ℓ (US qt, Imp qt)	4.0 (4.2, 3.5)				5.0 (5.3, 4.4)		
		Lower level	ℓ (US qt, Imp qt)	3.0 (3.2, 2.6)				4.0 (4.2, 3.5)		
	Transmission gear oil		ℓ (US qt, Imp qt)	2.6 (2.7, 2.3)		–	3.3 (3.5, 2.9)	–	3.5 (3.7, 3.1)	–
	Automatic transmission fluid		ℓ (US qt, Imp qt)	–		9.3 (9.8, 8.2)	–	9.3 (9.8, 8.2)	–	9.5 (10.0, 8.4)
	AT differential gear oil		ℓ (US qt, Imp qt)	–		1.4 (1.5, 1.2)	–	1.4 (1.5, 1.2)	–	1.4 (1.5, 1.2)
	4WD rear differential gear oil		ℓ (US qt, Imp qt)	–			0.8 (0.8, 0.7)	–	0.8 (0.8, 0.7)	
	Power steering fluid		ℓ (US qt, Imp qt)	–	0.7 (0.7, 0.6)					
	Engine coolant		ℓ (US qt, Imp qt)	5.5 (5.8, 4.8)				7 (7.4, 6.2)		

GENERAL INFORMATION

1-3

SUBARU

1988

	Page
GENERAL PRECAUTIONS	2
VEHICLE IDENTIFICATION NUMBERS (V.I.N.)	7
IDENTIFICATION NUMBER AND LABEL LOCATIONS	9
THEFT PREVENTION	11
RECOMMENDED FUEL, LUBRICANTS, SEALANTS AND ADHESIVES	13
TIGHTENING TORQUE OF STANDARD BOLTS AND NUTS	17
LIFTING, TOWING AND TIE-DOWN POINTS	18

General Precautions

Precautions to take before starting service

1) Be sure to perform the jobs listed in the Periodic Maintenance Schedule.
2) When a vehicle is brought in for maintenance, carefully listen to the owner's explanations of the symptoms exhibited by the vehicle. List the problems in your notebook, and refer to them when trying to diagnose the trouble.
3) All jewelry should be removed. Suitable work clothes should be worn.
4) Be sure to wear goggles.
5) Use fender, floor and seat covers to prevent the vehicle from being scratched or damaged.
6) Never smoke while working.
7) 4WD models (Selective 4WD)
When front wheels are jacked up or placed on test rollers (= chassis dynamometer) for operation, be sure to set "4WD switch" to "OFF".
In addition, disconnect harness connector for 4WD solenoid valve inside engine compartment.

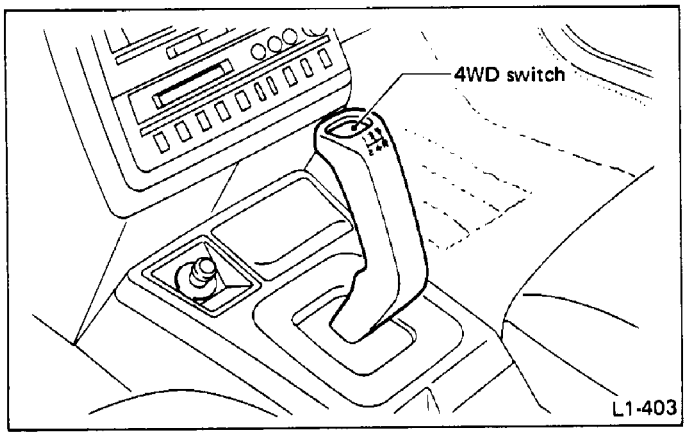

Fig. 1

8) Pneumatic suspension models w/height control ..... CANADA model only
These models are provided with height control mechanism. Be sure to return the height control to "Normal" position (low) and support the vehicle with a jack before getting under it for servicing, etc. To check any system other than electrical under the vehicle, disconnect cables from battery in advance.

Precautions while working

1) When jacking up the vehicle, be sure to use safety stands.
2) When jacking up the front or rear end of the car body, be sure to chock the tires remaining in contact with the ground.
3) Keep the parking brake applied when working on the vehicle. Set the shift lever to REVERSE when the parking brake cannot be applied, such as when the brakes are being worked on.
4) Keep the ignition key turned "OFF" if at all possible.
5) Be cautious while working when the ignition key is "ON"; if the temperature in the engine compartment increases, the cooling fan can start to operate.
6) While the engine is in operation, properly ventilate the workshop.
7) While the engine is in operation, be aware of any moving parts, such as the cooling fan and the drive belt.
8) Keep your hands off any metal parts such as the radiator, exhaust manifold, exhaust pipe, and muffler, to prevent burning yourself.
9) When servicing the electrical system or the fuel system, disconnect the ground cable from the battery.
10) When disassembling, arrange the parts in the order that they were disassembled.
11) When removing a wiring connector, do not pull the wire unit but remove the connector unit by holding it.
12) When removing a hose or tube, remove the clip first. Then, pull the hose or tube while holding its end fitting.
13) Replace the gasket, O-ring, snap ring, lock washer, etc. with new ones.
14) When tightening a bolt or nut, tighten it to the specified torque.
15) When performing work requiring special tools, be sure to use the designated ones.
16) After completing the work, make certain that the hoses, tubes and wiring harnesses are securely connected.
17) After completing the work, be sure to wash the vehicle.

Precautions in handling a full-time 4WD vehicle

MT

● Speedometer test

Generally, when testing the speedometer of a full-time 4WD vehicle, even if the engine is running at a relatively slow speed, releasing the clutch abruptly may still cause the vehicle to jump off of the test machine. Be especially careful to avoid this.

1) Testing Methods

(1) Jack-up Method

The usual speedometer tester is used and the rear wheels are tested with the front wheels raised off the ground and the center differential locked.

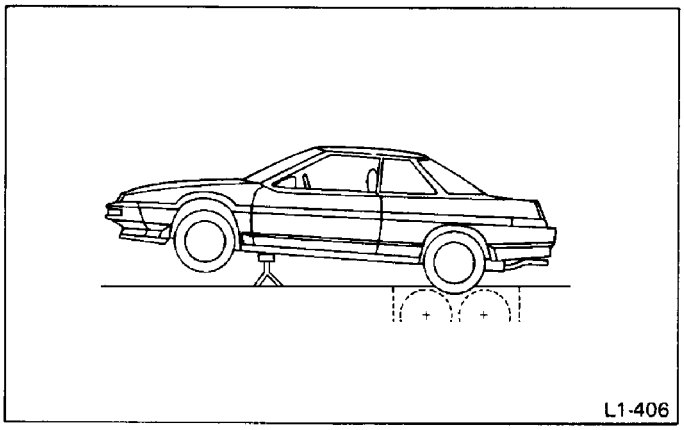

Fig. 3 Jack-up method

(2) Adapter Method

An adapter is installed between the vehicle's speedometer and cable, and testing is done using the usual speedometer tester with the center differential operating. The vehicle's speedometer will then indicate 1/2 actual wheel speed. Therefore, an adapter which doubles the speed is necessary.

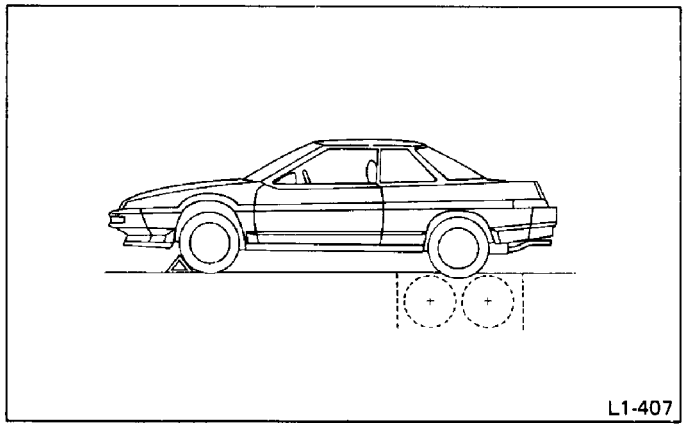

Fig. 4 Adapter method

Use the adapter method only when the jack-up method cannot be employed at the service garage.

2) Testing Procedures

(1) Jack-up Method

① Equipment

- Speedometer tester 1
- Garage jack 1
- Safety stand 2

② Precautions

- Test the speedometer using the rear wheels. (Vehicle stability is better than with the front wheels.)

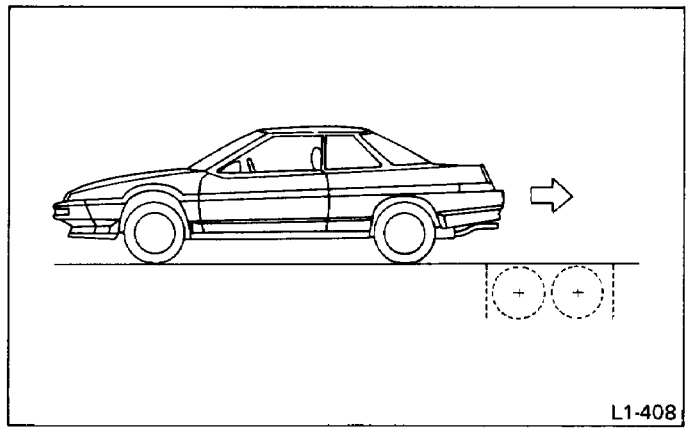

Fig. 5 Setting on the speedometer tester

- Place the garage jack and safety stands in their proper positions.
  Also, in order to prevent the vehicle from slipping due to vibration, do not place any wooden blocks or similar items between the safety stands and the vehicle.

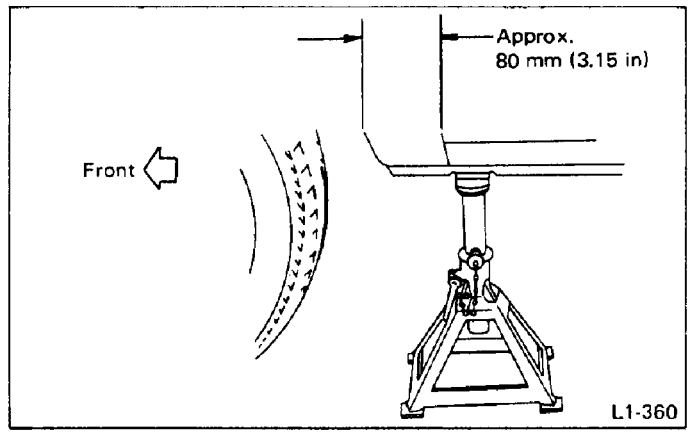

Fig. 6 Safety stand setting

- Since the front wheels will also be rotating, do not place anything near them. Also, make sure that nobody goes in front of the vehicle.
- With the center differential locked, confirm that the differential lock indicator light is lit.

If the differential lock switch is in the "ON" position, but the differential lock indicator light is not on, rock the vehicle slightly forward or backward to lock the differential.
Operate the differential lock switch before setting the speedometer tester. Never operate the differential lock switch while the vehicle is on the free rollers. (There is a chance that the vehicle may jump off the rollers.)

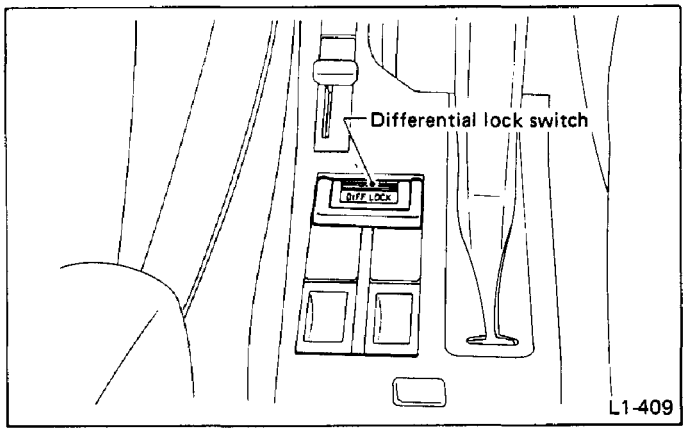

Fig. 7 Differential lock switch

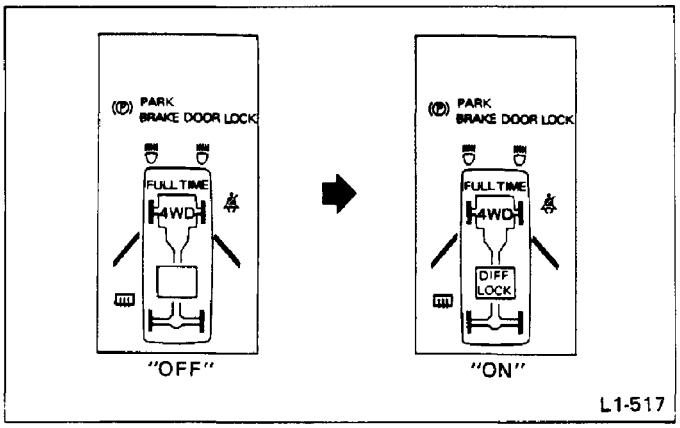

Fig. 8 Differential lock indicator light

- For safety, start in second gear. Never make any abrupt speed changes or maneuvers during the test.

(2) Adapter Method

① Equipment

- Speedometer tester 1
- Wheel blocks 2
- ADAPTER (499827100) 1

Since the speedometer detector is on the engine side of the center differential, if the front wheels are locked, the vehicle's speedometer will only indicate 1/2 the speed of the rear wheels. Thus, an adapter which doubles the speed is necessary.

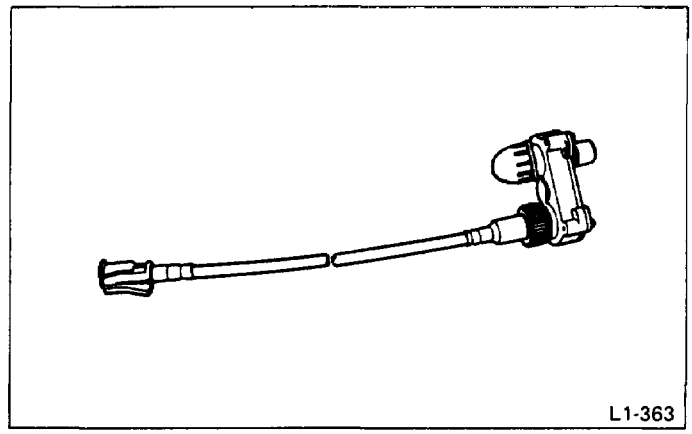

Fig. 9 Adapter

② Precautions

- Do the testing with the differential lock cancelled. Confirmation that the differential lock is cancelled can be done with the differential lock indicator light, but for this test, confirm with actual driving that there is no braking phenomenon when turning sharp corners at low speed.

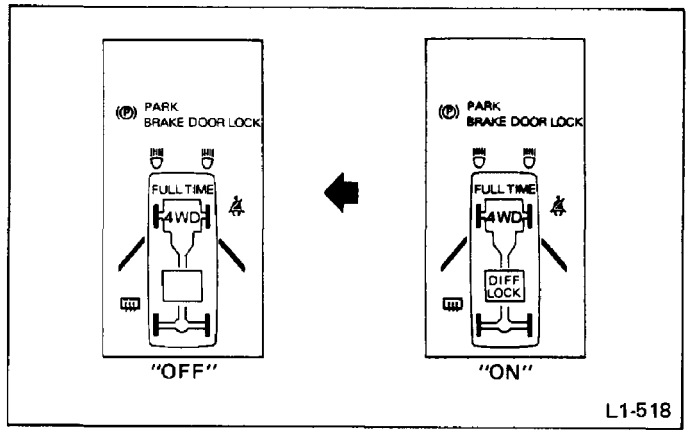

Fig. 10 Differential lock indicator light

- Since the vehicle speedometer indicates 1/2 the actual speed of the rotating wheels, be certain to install an ADAPTER (499827100).

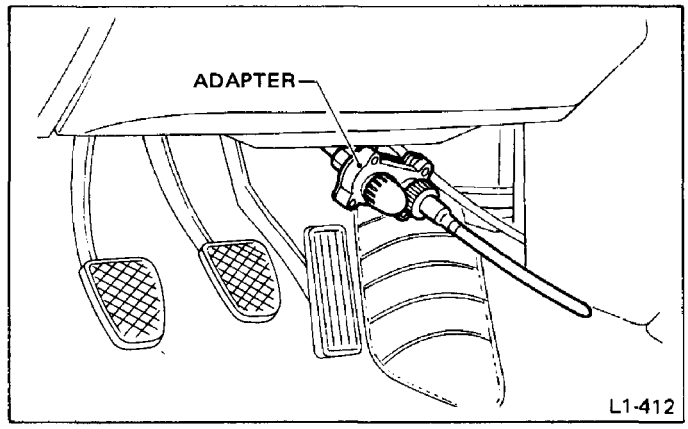

Fig. 11 Adapter installation

- Do the test with the rear wheels on the speedometer tester rollers.

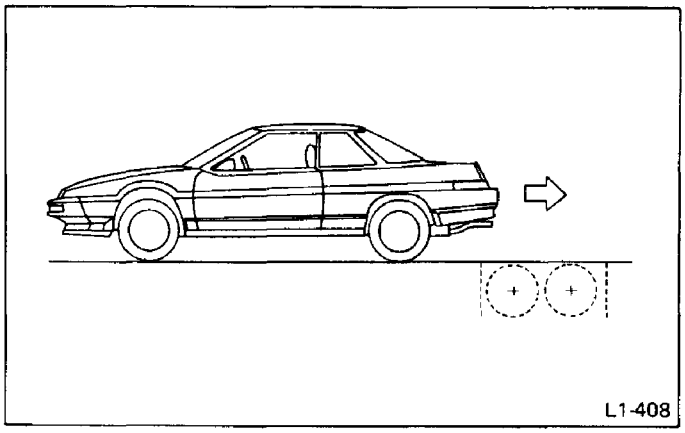

Fig. 12 Setting on the speedometer tester

- In order to prevent the vehicle from jumping off the tester, be certain to apply the parking brake and place wheel blocks in front of the front wheels. Also, make sure that nobody goes in front of the vehicle.

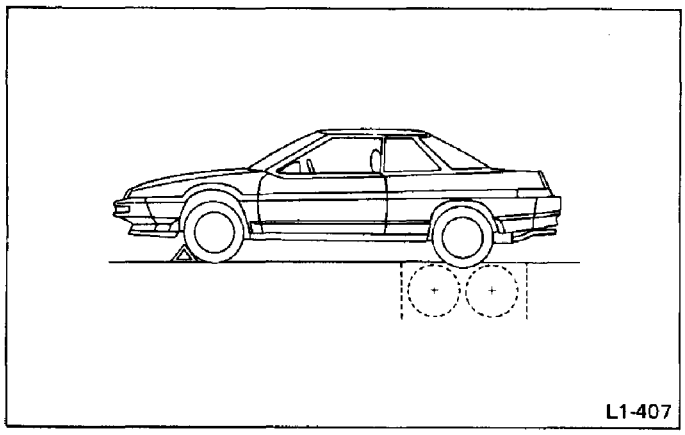

Fig. 13 Adapter method

- For safety, start in second gear. Never make any abrupt speed changes or maneuvers during the test.
- The center differential will be rotating faster than normal. Check the transmission oil which also serves as the center differential oil and add if oil level is low.
- Keep maximum speed below 50 km/h (31 MPH) and for less than 1 minute.

③ Adapter Installation Procedures

a. Disconnect the speedometer cable from the speedometer.

b. Connect the speedometer cable to the ADAPTER gear box.

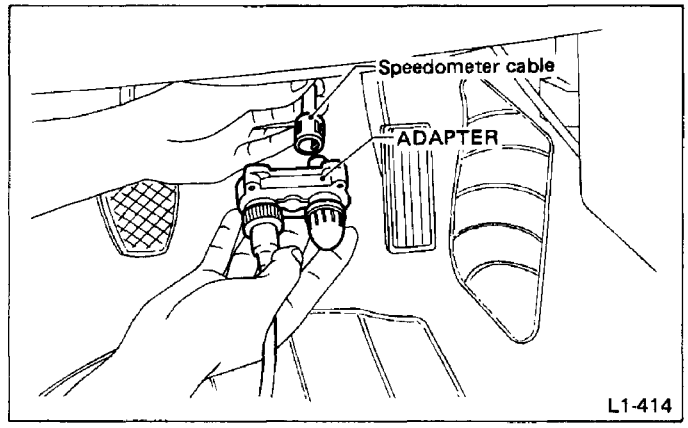

Fig. 14

c. Connect the speedometer to the ADAPTER speedometer cable.

Place the cable so that it does not get in the way when depressing the accelerator pedal.

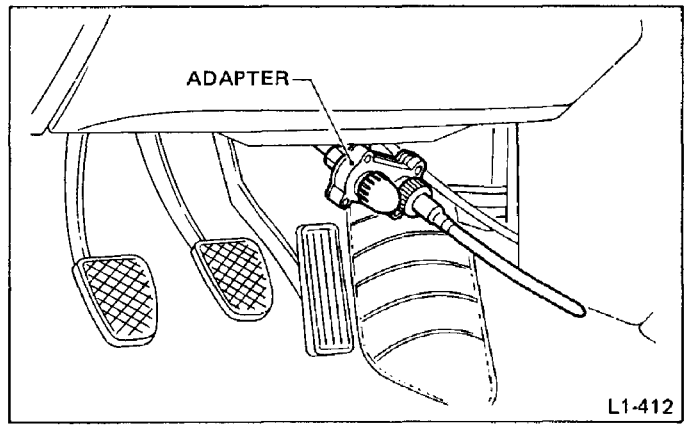

Fig. 15

● Brake Test

When using the brake tester, do so with the differential lock cancelled. Turn the differential lock switch off and make sure that the differential lock indicator light ("DIFF LOCK") has gone off.

● Chassis Dynamometer Test
The propeller shaft must be removed and the vehicle made into front wheel drive. To undo the propeller shaft, do not disconnect the front propeller shaft ASSY. Only disconnect the rear propeller shaft ASSY and lock the center differential.

When reconnecting the front and rear propeller shaft ASSY's, align the matching marks very carefully.

● Tire Balance Test (On-car-machine)
For safety when doing the tire balance testing, disconnect the propeller shaft and keep the center differential locked. Also, do not drive the tires with the engine, but use the on-car-machine to rotate the tires and do the balance testing.

a. In doing the testing, be sure to jack up both the left and right sides and put wheel blocks behind the tires contacting the ground.
b. Make sure that the transmission is in neutral gear position.

● Towing
If the following conditions cannot be met, raise and support all four wheels to move the vehicle.

a. Before towing, check transmission oil and differential oil levels and top up to the specified level if necessary.
b. The ignition switch should be in the "ACC" position while the vehicle is being towed.

1) Rope Towing
① Turn the differential lock switch to the "OFF" position and make sure that the differential lock indicator light ("DIFF LOCK") has gone off. (Confirmation of differential lock cancellation.)
② When the vehicle has a large air spoiler skirt on it, wrap the tow rope with a rag to prevent the rope from scratching the air spoiler.
Tow the vehicle with the engine off.
- The power steering will not be operating so the steering will be stiff.
- The brake booster will not be operating so the braking will be very weak.

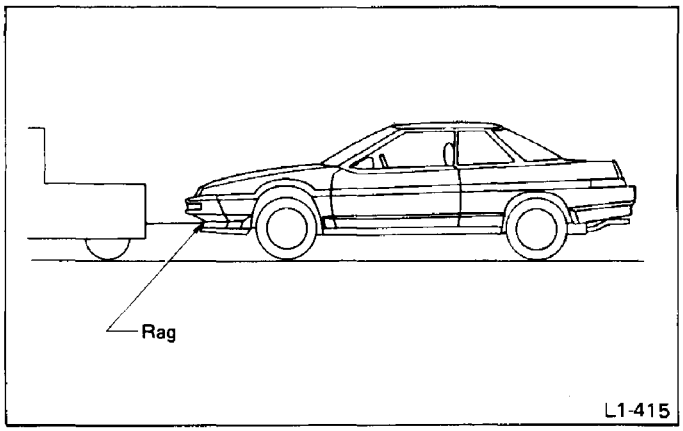

Fig. 16 Rope towing

2) Towing with Front Wheels Raised
① Turn the differential lock switch to the "OFF" position and make sure that the differential lock indicator light ("DIFF LOCK") has gone off. (Confirmation of differential lock cancellation.)
② The center differential will be rotating faster than normal. Check the transmission oil which also serves as the center differential oil and add if oil level is low.
Tow at less than 30 km/h (19 MPH).
③ Do not tow for more than 50 km (31 miles).

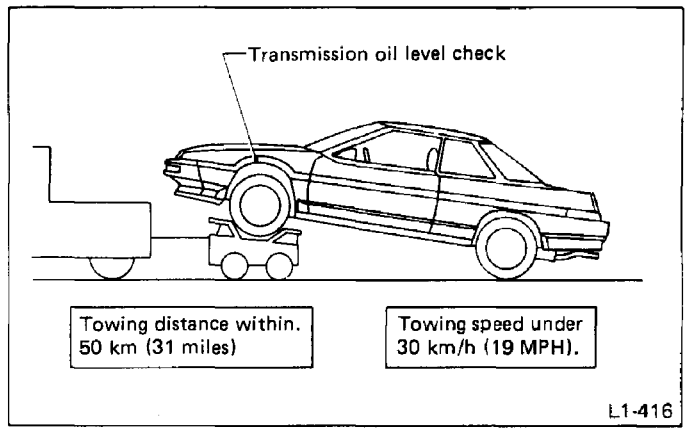

Fig. 17 Towing with front wheels raised

● Differential Lock Cancelling Method
1) Under normal circumstances, start the engine, turn the differential lock switch off and, with the tires pointed straight, move the vehicle either forward or backward.
2) If the engine cannot be started, such as with a dead battery or when the vacuum actuator is not working, raise the front (or rear) wheels and move the differential lock lever, on the right side of the transmission, towards the rear of the vehicle.

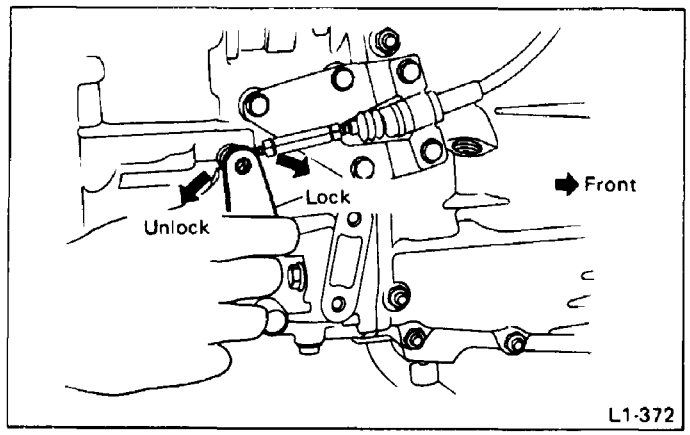

Fig. 18 Differential lock lever operation

AT

- Towing
  If the following conditions cannot be met, raise and support all four wheels to move the vehicle.

a. Before towing, check transmission oil and differential oil levels and top up to the specified level if necessary.
b. The ignition switch should be in the "ACC" position while the vehicle is being towed.
c. Never use the tie down tabs for towing.
d. Remember that brake booster and power steering will not work when the engine is "OFF". You will have to use greater effort for the brake pedal and steering wheel.

1) Rope towing
   (1) Place the selector lever "N" position and put a spare fuse inside the FWD connector.
   (2) Tow at less than 30 km/h (20 MPH).
   (3) Do not tow for more than 10 km (6 miles).

- Before checking or servicing the car with the front wheels raised or on rollers (brake tester, chassis dynamometer, etc.), always set the car in the FWD mode.
  To set the car in the FWD mode, disconnect the 4WD circuit by inserting a fuse in the FWD connector inside the engine compartment. Also chock the rear wheels firmly. If the car is left in the 4WD mode, it will surge abruptly when the wheels turn, possibly damaging the transfer clutch.

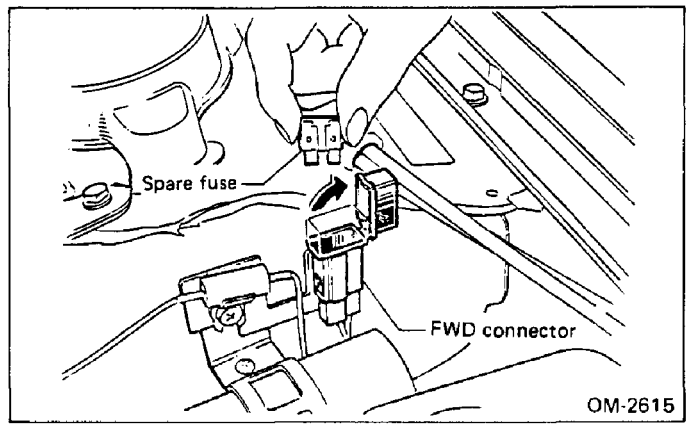

Fig. 19

- Also ensure that the FWD pilot light is on.

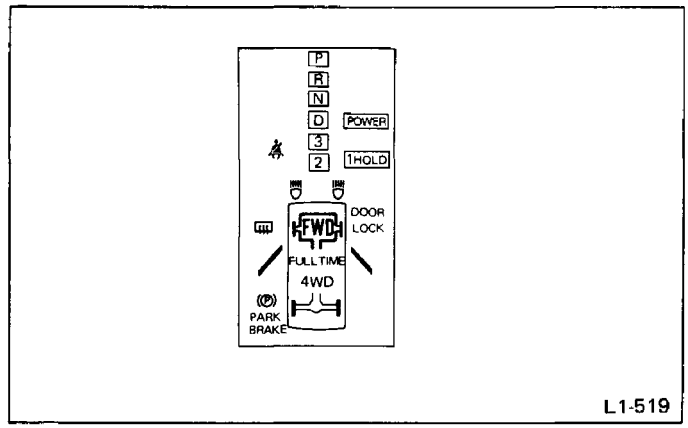

Fig. 20

Vehicle Identification Numbers (V.I.N.)

1. Applicable V.I.N. in This Manual

1800 cc Engine	DL (MPFI, 5MT)	JF1AX422XJB	300001 and after
	GL (MPFI, 5MT)	JF1AX432*1XJB	300001 and after
	GL (MPFI, 4AT)	JF1AX432*1XJC	300001 and after
	4WD GL (MPFI, 5MT, Single-range)	JF1*2AX732*1XJD	300001 and after
2700 cc Engine	XT6 (MPFI, 4AT)	JF1AX842*1XJC	300001 and after
	FULL TIME 4WD XT6 (MPFI, 5MT, Single-range)	JF1*2AX942*1XJG	300001 and after
	FULL TIME 4WD XT6 (MPFI, 4AT)	JF1*2AX942*1XJH	300001 and after

*1: For CANADA, "B" instead of "2"
*2: For CANADA, "2" instead of "1"

2. The Meaning of V.I.N.

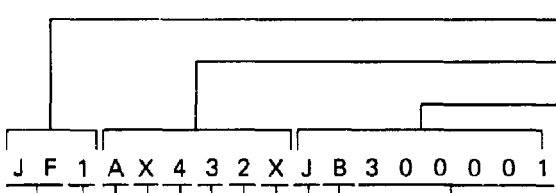

Sequential number
300001 and after

Plant of manufacture and transmission type
B : Gunma manufacture – 5MT
C : Gunma manufacture – AT
D : Gunma manufacture – 4WD 5MT
G : Gunma manufacture – Full-time 4WD MT
H : Gunma manufacture – Full-time 4WD AT

Model year
J : 1988

Check digit
0 thru 9 and X, varies

Weight class and restraint type
2 : 3,001 to 4,000 lb GVWR with passive restraint
B : 3,001 to 4,000 lb GVWR without passive restraint (For CANADA)

Model
2 : DL model
3 : GL model
4 : GL-10 model

Series and engine type
4 : 1800 cc engine
7 : 1800 cc engine 4WD (model equipped with air suspension)
8 : 2700 cc engine
9 : 2700 cc engine 4WD (model equipped with air suspension)

Body type
X : XT

Line
A : Fuji SUBARU L line

Type of vehicle
1 : Passenger car
2 : Multipurpose passenger vehicle

Manufacturer and make
Fuji Heavy Industries Ltd. SUBARU

Identification Number and Label Locations

1. Vehicle Identification Number

The vehicle identification number is stamped on the bulkhead panel of the engine compartment.

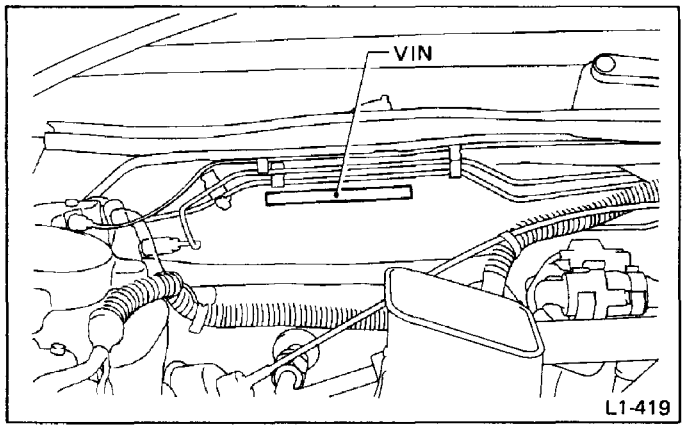

Fig. 21

2. Engine Serial Number

The engine serial number is stamped on the right side of the crankcase at the front.

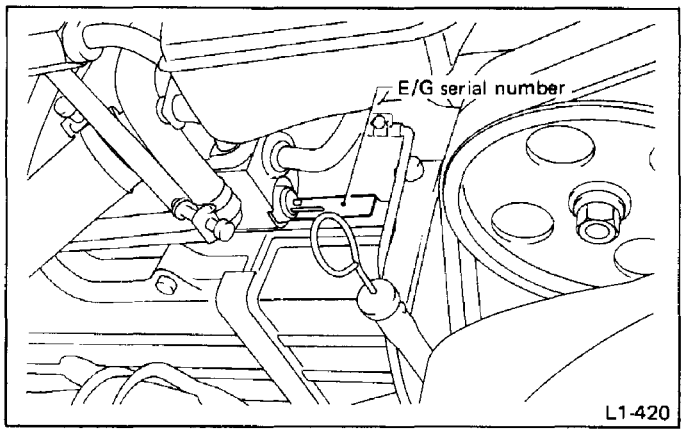

Fig. 22

3. Transmission Serial Number

The transmission number label is stuck on the upper surface of main case (MT) or converter housing (AT).

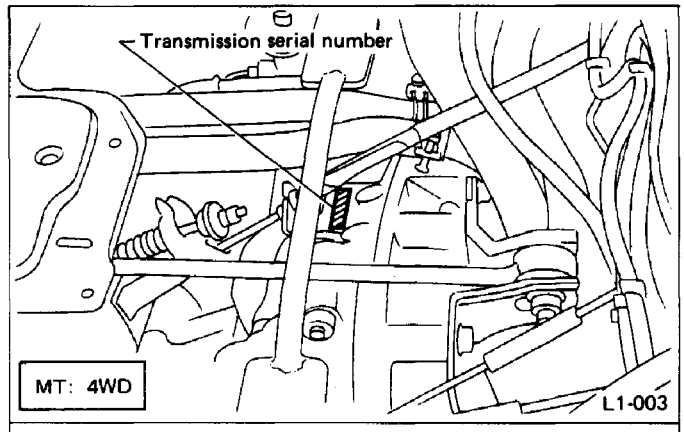

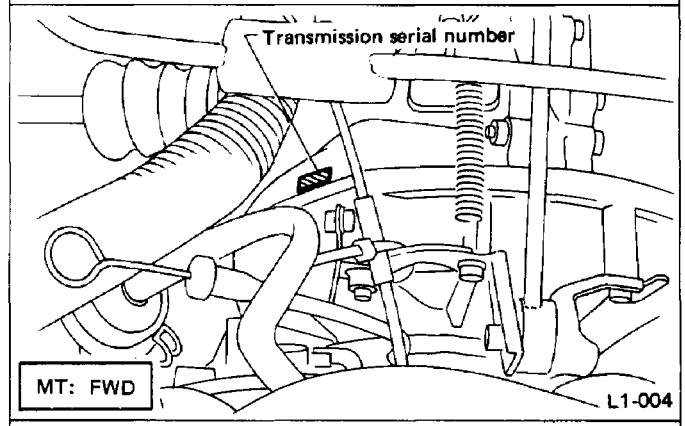

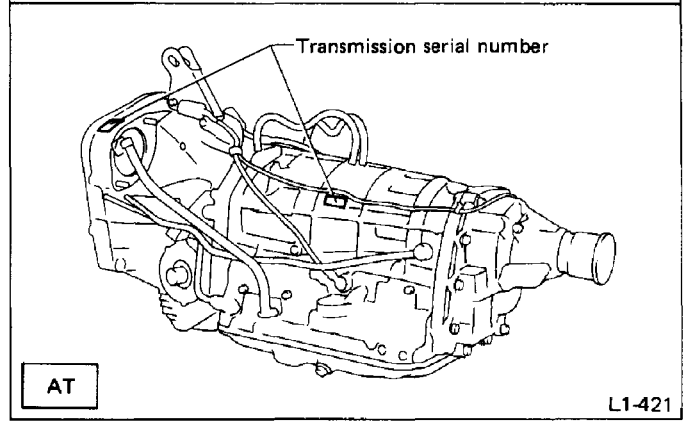

Fig. 23

Engine, transmission and vehicle identification numbers are used for factory communications such as Technical information, Service bulletins and other information.

4. Safety Certification Plate

Safety certification plate is stuck near the driver's side door striker.

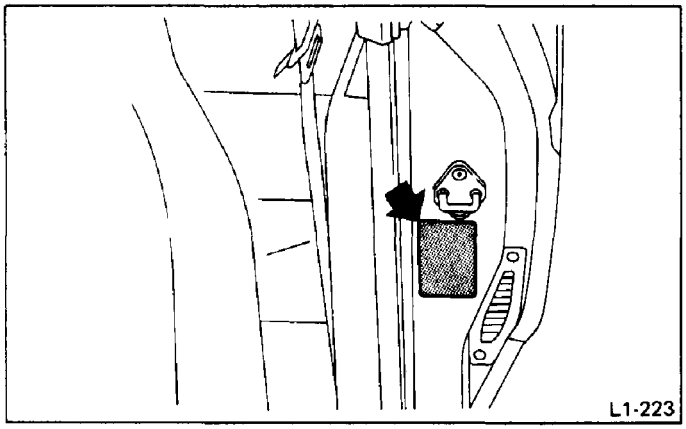

Fig. 24

5. Vehicle Emission Control Information Labels

Vehicle emission control information labels are stuck under the engine hood.

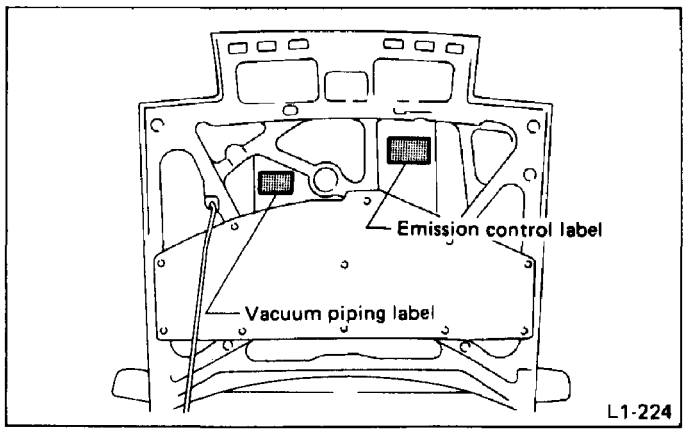

Fig. 25

6. Vehicle Identification Number Plate

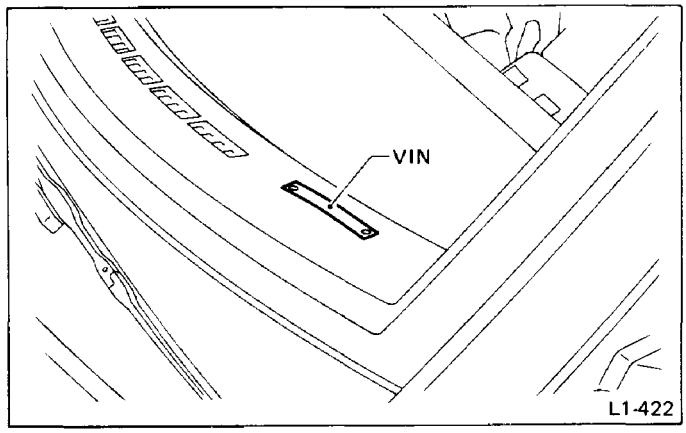

Fig. 26

7. Color Code Label

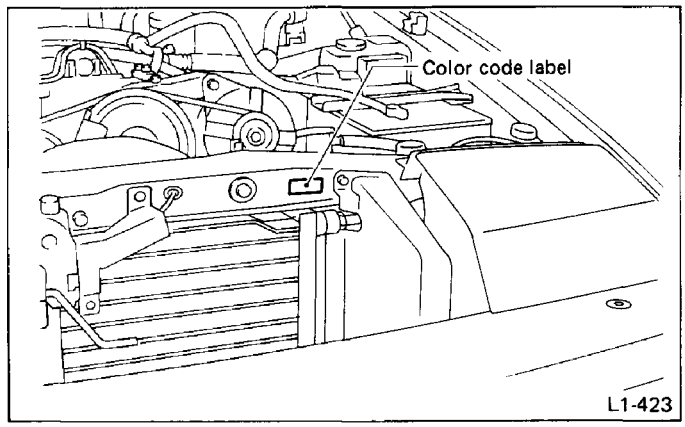

Fig. 27

Theft Prevention

The Theft Prevention (T.P.) label is stuck or V.I.N. is stamped on the main line installed parts shown below.
Additionally, the "R DOT" label is stuck or " ❼ R DOT" is stamped on the main spare parts shown below.

1. T.P. label and "R DOT" label

(A) T.P. label

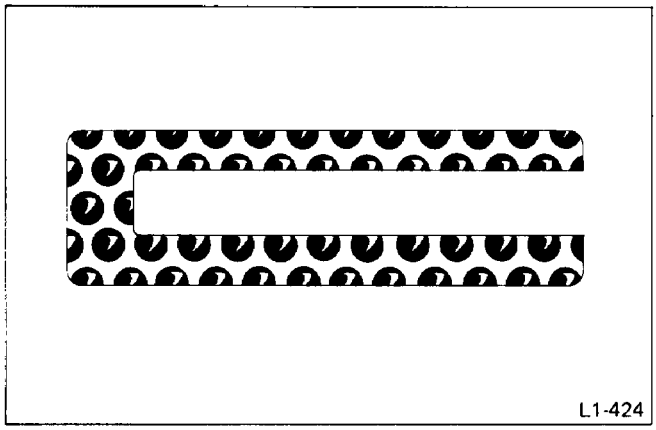

For engine and transmission, "V.I.N." is stamped.

(B) "R DOT" label

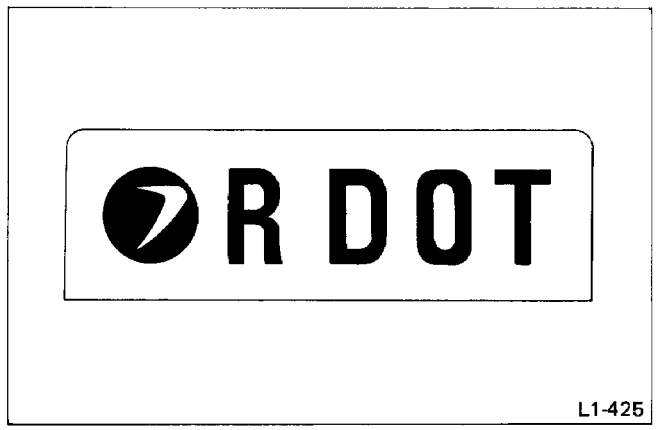

For engine and transmission, "❼ R DOT" is stamped.

Fig. 28

2. Location

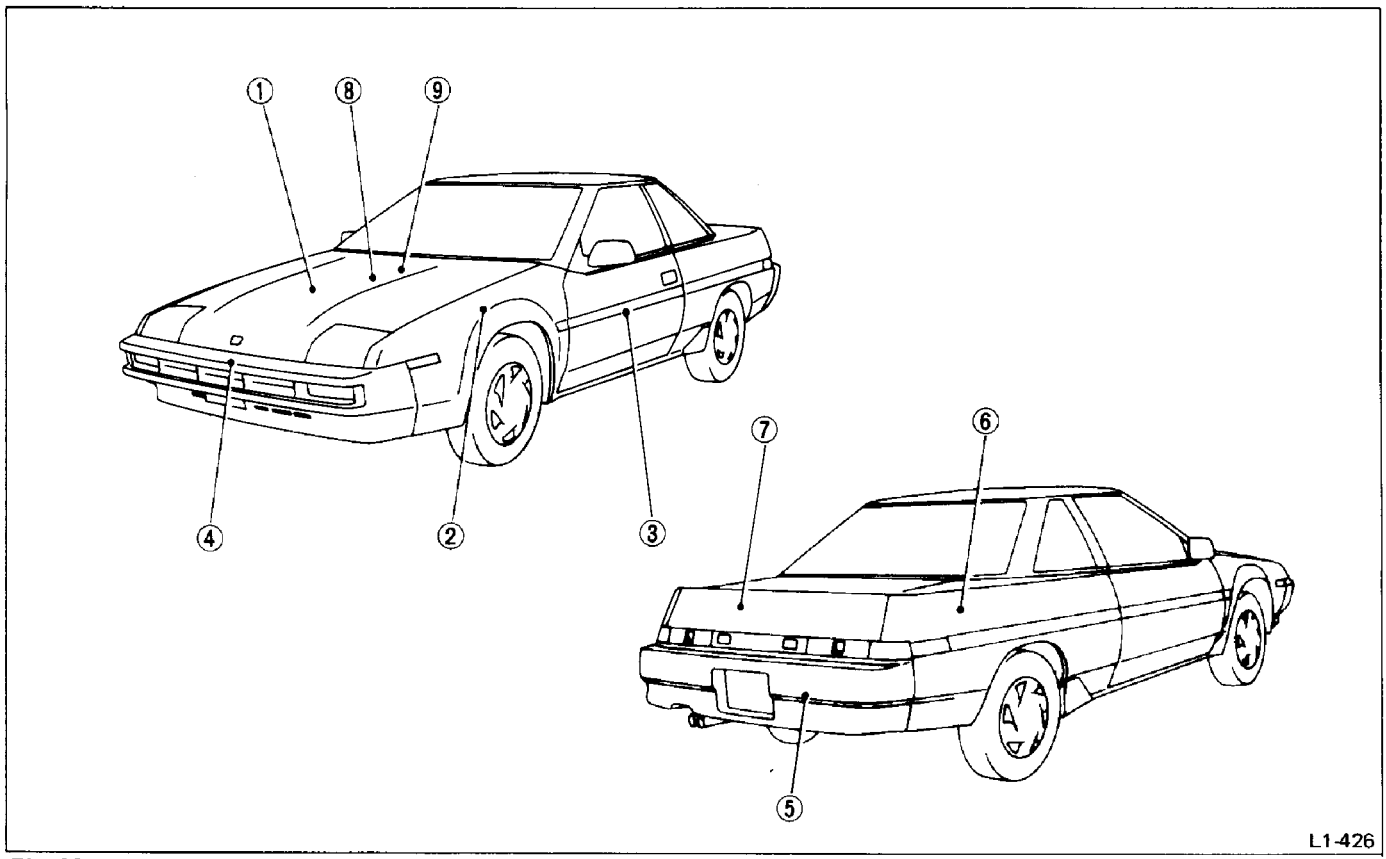

Fig. 29

① Front hood

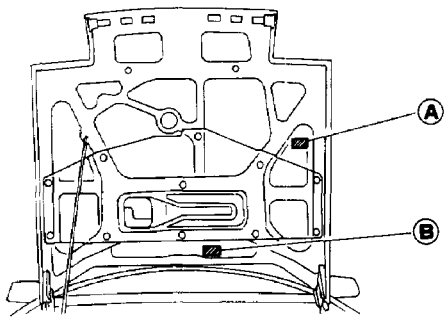

② Fender

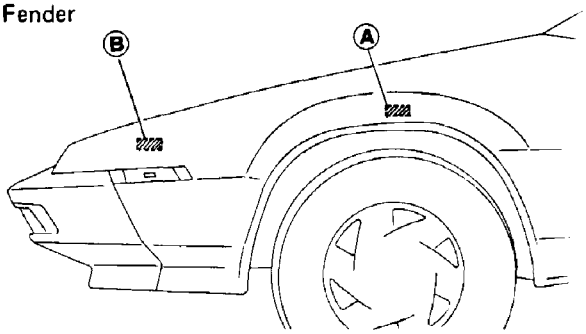

③ Door

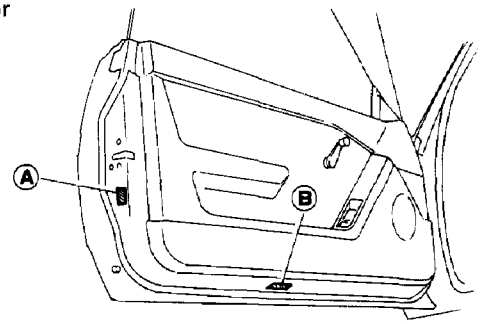

④ Front bumper

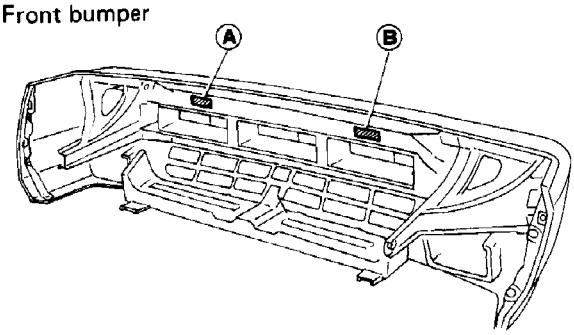

⑤ Rear bumper

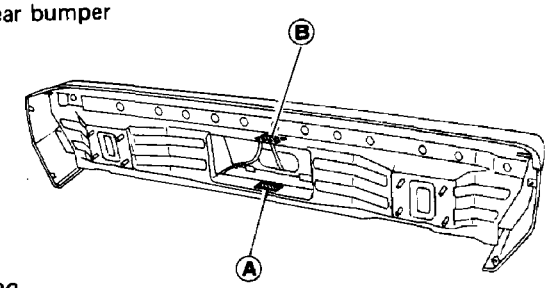

⑥ Rear quarter

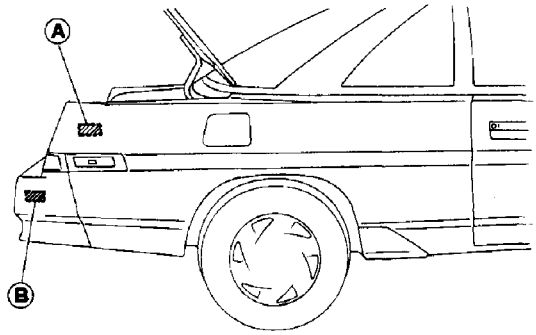

⑦ Trunk lid

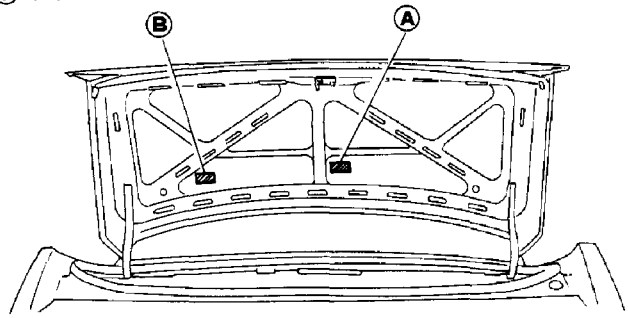

⑧ Engine

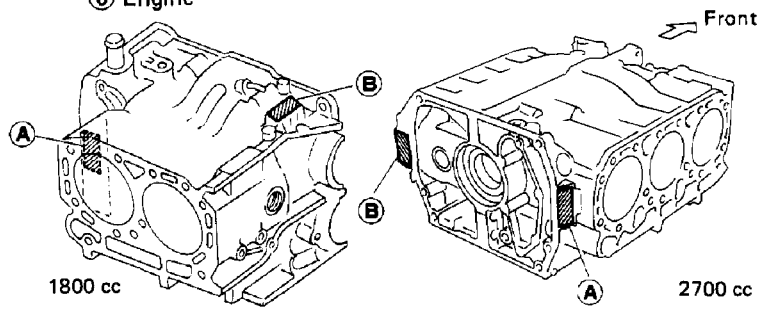

⑨ Transmission

• Manual Transmission

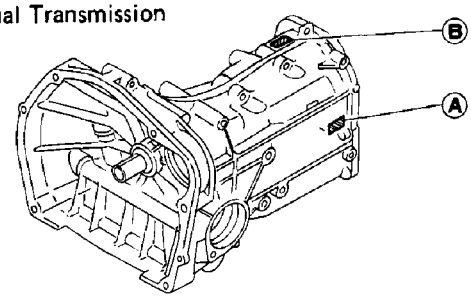

• Automatic Transmission

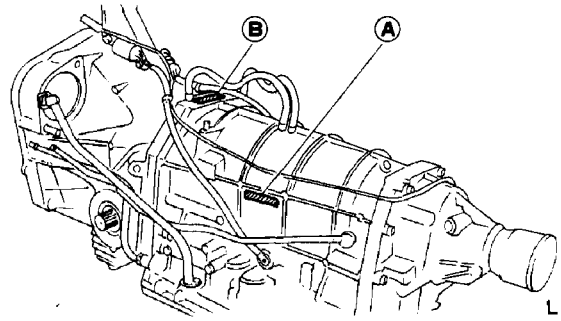

L1-520

Fig. 30

Recommended Fuel, Lubricants, Sealants and Adhesives

1. Fuel

The SUBARU engine is designed to give satisfactory engine performance and low exhaust emissions by using gasoline of 87 octane or higher. (Average of Research Octane Number and Motor Octane Number.)

Use unleaded gasoline only.

2. Lubricants

<table>
<tr><th>Lubricants</th><th>Specifications</th><th>Remarks</th></tr>
<tr><td>• Engine oil</td><td>• API Classification:
SE or SF</td><td>• For SAE viscosity number, refer to the table below.</td></tr>
<tr><td>• Transmission and differential gear oil
• 4WD rear differential gear oil</td><td>• API Classification:
GL-5</td><td>• For SAE viscosity number, refer to the table below.</td></tr>
<tr><td>• Automatic transmission and power steering fluid</td><td>• DEXRON II</td><td>(For power steering fluid)<table><tr><th>Recommended fluid</th><th>Manufacturer</th></tr><tr><td rowspan="6">ATF
Dexron II</td><td>B.P.</td></tr><tr><td>CALTEX</td></tr><tr><td>CASTROL</td></tr><tr><td>MOBIL</td></tr><tr><td>SHELL</td></tr><tr><td>TEXACO</td></tr></table></td></tr>
<tr><td>• Limited Slip Differential (LSD) oil</td><td>• Genuine SUBARU LSD oil
(Part No. 003304300)</td><td>———</td></tr>
<tr><td>• CYBRID power steering fluid</td><td>• Genuine SPECIAL POWER STEERING FLUID
(Part No. K0209A0080)</td><td>———</td></tr>
<tr><td>• Coolant</td><td>• Genuine SUBARU Coolant
(Part No. 000016218)
(Anti-freeze, anti-corrosive ethylene glycol base)</td><td>• For further coolant specifications, refer to the table below.</td></tr>
<tr><td>• Brake fluid</td><td>• DOT3 or DOT4</td><td>• FMVSS NO. 116
• Avoid mixing brake fluid of different brands to prevent the fluid performance from degrading.
• When brake fluid is added, be careful not to allow any dust into the reservoir.</td></tr>
</table>

Lubricants	Recommended	Application	Equivalent
• Grease	FX clutch grease (P/N 000040901)	Splines of transmission main shaft.	———
	Molylex No. 2 (P/N 723223010)	BJ and DOJ joints of axle shafts.	———
	PBC (P/N 003607000)	Stopper plugs of the front disc brake caliper.	———
	Silicone KS64 (P/N 003606010)	Brake caliper body (Piston, spindle adjuster O-ring), battery terminals, distributor, hood latch, etc.	———
	Silicolube G-30M (P/N 004404002)	Control cables and carburetor linkages subject to cold weather, water-pump impeller, door latch, striker, battery terminals, etc.	———
	Dow Corning Molykote No. 7439 (P/N 725191460)	Contacting surfaces of drum brake shoes and shoe clearance adjuster.	———
	Niglube RX-2 (P/N 003606000)	Disc brake caliper (lever, connecting link and spindle head).	———
	Valiant grease M-2 (P/N 003608001)	Steering gearbox (Both manual and power steering)	———
	SUNLIGHT 2 (P/N 003602010)	Steering shaft bearing, bushing for gear shift system, etc.	———
• Spray lubricants	SUBARU CRC (P/N 004301003)	O_2 sensor.	———

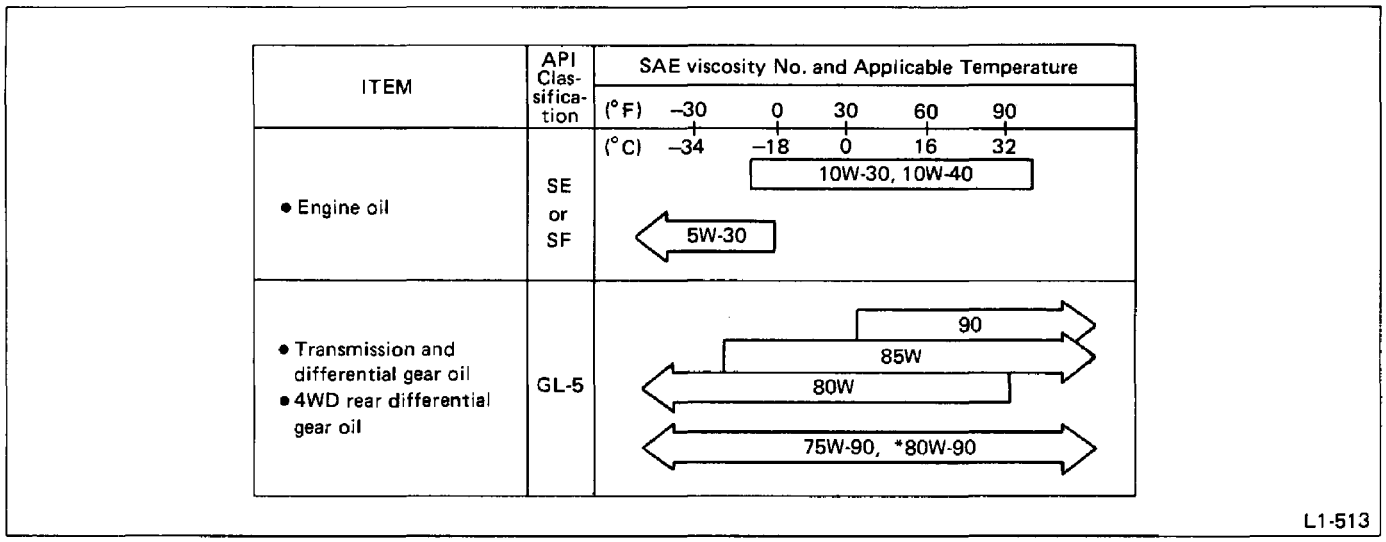

Fig. 31

a. Each oil manufacturer has its base oil and additives. Thus, do not mix two or more brands. (Except engine oil)
b. When replacing engine oil, it does not matter if the oil to be added is a different brand from that in the engine, however use oil having the API classification and SAE viscosity No. designated by Subaru.
c. SAE 50W-30 is not recommended for sustained high speed driving.
d. If vehicle is used in desert areas or areas with very high temperatures or for other heavy duty applications, the following viscosity oils may be used:

30, 40, 10W-50, 20W-40, 20W-50

e. *For differential gear oil (AT)

Coolant Specifications							
Lowest atmospheric anticipated temperature	SUBARU coolant-to-*water ratio (Volume) %	Specific gravity					Freezing point
		at 10°C (50°F)	at 20°C (68°F)	at 30°C (86°F)	at 40°C (104°F)	at 50°C (122°F)	
Above -30°C (-22°F)	50 – 50	1.078	1.074	1.069	1.063	1.057	-36°C (-33°F)

* It is recommended that distilled water be used.

a. Avoid using any coolant or only water other than this designated type to prevent corrosion.
b. SUBARU's engine is aluminum alloy, so special care is necessary.

3. Sealants and Adhesives

	Recommended	Application	Equivalent
Sealant	Three Bond 1105 (P/N 004403010)	Mating surfaces of transmission cases, plugs, etc. Periphery of water pump mechanical seal.	Dow Corning's No. 7038
	Three Bond 1215 (P/N 004403007)	Flywheel bolts, mating surface of flywheel housing, crank case and cam case.	Dow Corning's No. 7038
	Starcalking B-33A (P/N 000018901)	Sealing against water and dust entry through weatherstrips, grommets, etc.	Butyl Rubber Sealant
Adhesive	Cemedine 5430L	Weatherstrips and other rubber parts, plastics and textiles except soft vinyl parts.	3M's EC-1770 EC-1368
	Cemedine 540	Soft vinyl parts, and other parts subject to gasoline, grease or oil (e.g., trim leather, gear shift boot, door inner remote cover, etc.).	3M's EC-776 EC-847 EC-1022 (Spray Type)
	Cemedine 3000	Bonding metals, glass, plastic and rubber parts. Repairing slightly torn weather-strips, etc.	Armstrong's Eastman 910
	Essex Chemical Corp's Urethane E	Windshield to body panel.	———

Tightening Torque of Standard Bolts and Nuts

(1) ENGINE & TRANSMISSION

Unit: N·m (kg-m, ft-lb)

Dia. x Pitch (mm)	5T	7T	9T	10T
4 x 0.75	1.0 – 1.5 (0.105 – 0.155, 0.8 – 1.1)	1.5 – 2.0 (0.155 – 0.205, 1.1 – 1.5)	2.5 – 3.0 (0.255 – 0.305, 1.8 – 2.2)	3.0 – 3.5 (0.305 – 0.355, 2.2 – 2.6)
5 x 0.9	2.5 – 3.0 (0.255 – 0.305, 1.8 – 2.2)	2.9 – 3.9 (0.30 – 0.40, 2.2 – 2.9)	4.9 – 5.9 (0.50 – 0.60, 3.6 – 4.3)	5.4 – 6.4 (0.55 – 0.65, 4.0 – 4.7)
6 x 1.0	4.4 – 5.4 (0.45 – 0.55, 3.3 – 4.0)	5.9 – 6.9 (0.60 – 0.70, 4.3 – 5.1)	9.4 – 10.8 (0.955 – 1.105, 6.9 – 8.0)	10 – 12 (1.0 – 1.2, 7 – 9)
8 x 1.25	12 – 14 (1.2 – 1.4, 9 – 10)	14.2 – 17.2 (1.45 – 1.75, 10.5 – 12.7)	23 – 26 (2.3 – 2.7, 17 – 20)	25 – 28 (2.5 – 2.9, 18 – 21)
10 x 1.25	25 – 28 (2.5 – 2.9, 18 – 21)	30 – 36 (3.1 – 3.7, 22 – 27)	46 – 54 (4.7 – 5.5, 34 – 40)	49.5 – 58.4 (5.05 – 5.95, 36.5 – 43.0)
12 x 1.5	41 – 49 (4.2 – 5.0, 30 – 36)	53 – 63 (5.4 – 6.4, 39 – 46)	84 – 98 (8.6 – 10.0, 62 – 72)	88 – 106 (9.0 – 10.8, 65 – 78)
14 x 1.6	71 – 84 (7.2 – 8.6, 52 – 62)	88 – 106 (9.0 – 10.8, 65 – 78)	139 – 165 (14.2 – 16.8, 103 – 122)	147 – 175 (15.0 – 17.8, 108 – 129)

(2) BODY

Unit: N·m (kg-m, ft-lb)

	Dia. (mm)	4T	7T	9T
TC-002 *Fig. 32*	4	1.7 – 2.6 (0.17 – 0.27, 1.2 – 2.0)		
	5	2.9 – 5.9 (0.30 – 0.60, 2.2 – 4.3)		
	6	5.4 – 9.3 (0.55 – 0.95, 4.0 – 6.9)		
	8	12.7 – 22.6 (1.30 – 2.30, 9.4 – 16.6)	22.6 – 42.2 (2.30 – 4.30, 16.6 – 31.1)	31.4 – 51.0 (3.20 – 5.20, 23.1 – 37.6)
	10	27.5 – 47.1 (2.80 – 4.80, 20.3 – 34.7)	51.0 – 86.3 (5.20 – 8.80, 37.6 – 63.7)	62.8 – 107.9 (6.40 – 11.00, 46.3 – 79.6)
	12	52.0 – 85.3 (5.30 – 8.70, 38.3 – 62.9)	88.3 – 156.9 (9.00 – 16.00, 65.1 – 115.7)	117.7 – 196.1 (12.00 – 20.00, 86.8 – 144.7)
TC-003 *Fig. 33* Including bolt or nut with washer or spring washer only	4	1.2 – 2.2 (0.12 – 0.22, 0.9 – 1.6)		
	5	2.5 – 4.4 (0.25 – 0.45, 1.8 – 3.3)		
	6	4.4 – 7.4 (0.45 – 0.75, 3.3 – 5.4)		
	8	9.8 – 17.7 (1.00 – 1.80, 7.2 – 13.0)	17.7 – 31.4 (1.80 – 3.20, 13.0 – 23.1)	23.5 – 39.2 (2.40 – 4.00, 17.4 – 28.9)
	10	22.6 – 36.3 (2.30 – 3.70, 16.6 – 26.8)	37.3 – 66.7 (3.80 – 6.80, 27.5 – 49.2)	48.1 – 83.4 (4.90 – 8.50, 35.4 – 61.5)
	12	39.2 – 64.7 (4.00 – 6.60, 28.9 – 47.7)	68.6 – 117.7 (7.00 – 12.00, 50.6 – 86.8)	88.3 – 147.1 (9.00 – 15.00, 65.1 – 108.5)

The mark is embossed on the bolt head as follows:

4T —— 4 **9T —— 9**
5T —— 5 **10T —— 10**
7T —— 7

Lifting, Towing and Tie-down Points

Be sure to lift, tow and tie-down the vehicle at the designated positions.

1. Garage Jack

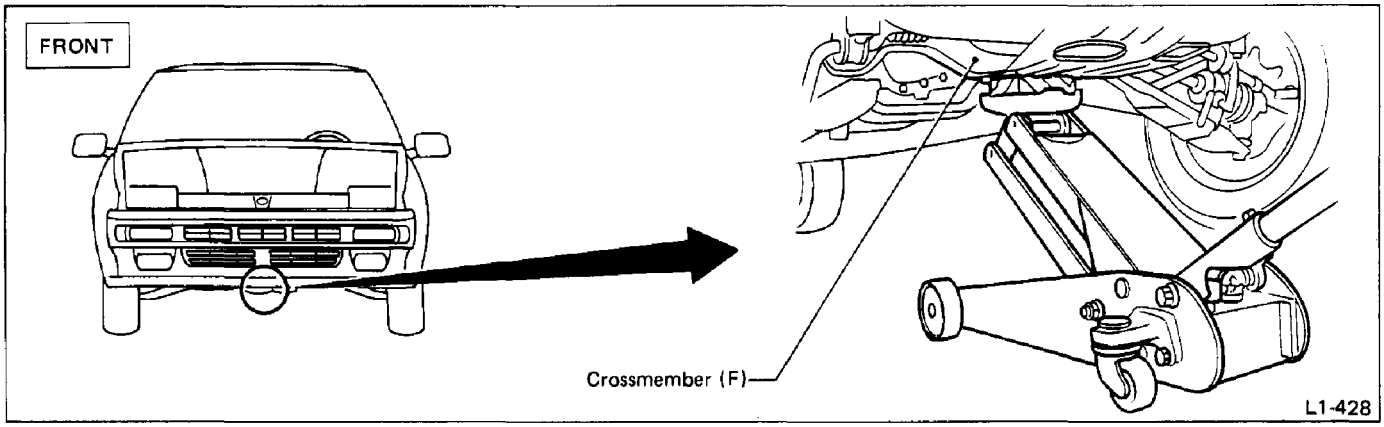

Fig. 34

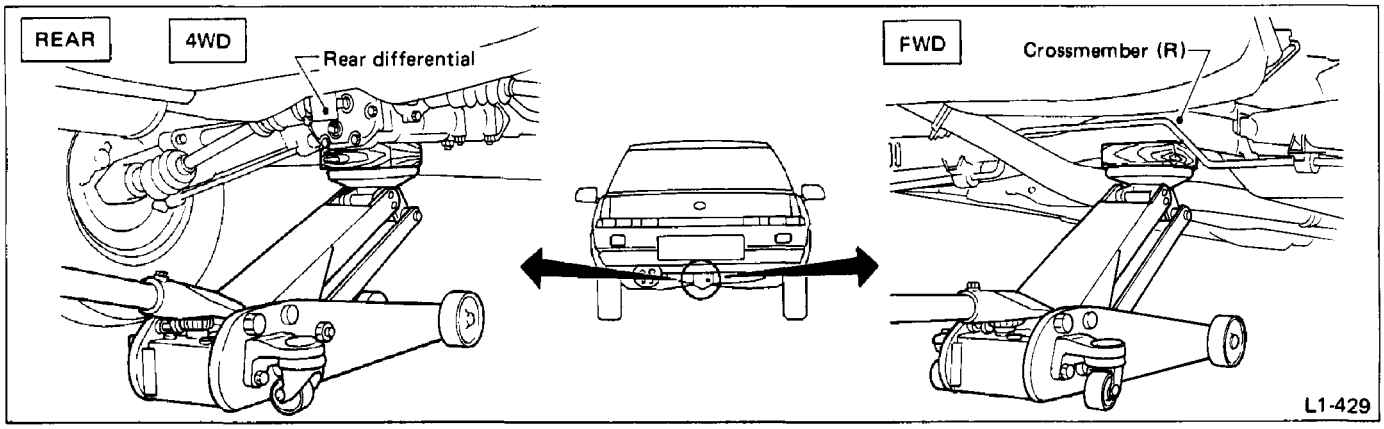

Fig. 35

a. When jacking up the vehicle, place chocks to hold wheels.
b. After jacking up the vehicle with garage jack, be sure to support the vehicle with safety stands for safety.

2. Pantograph Jack

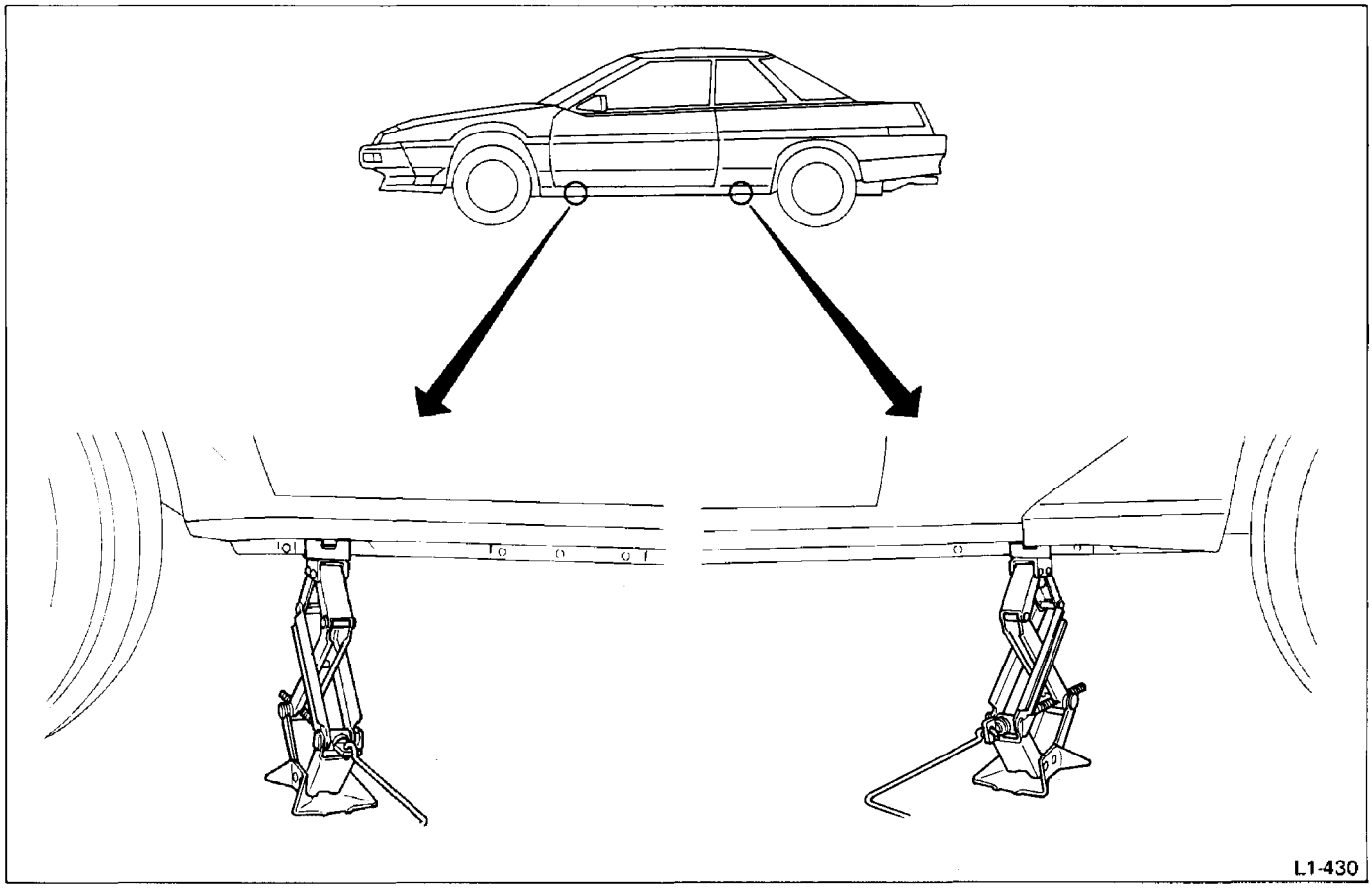

Fig. 36

a. Never get under the vehicle while it is supported only by the jack. Always use safety stands to support body when you have to get under the car.
b. Block the wheels diagonally using wheel chocks.
c. Make sure the jack is set at the correct position on the flange of side sill.
d. Be careful not to set the jack at the air flap portion.

3. Safety Stand

Be sure to lift vehicle at the same four positions as those of pantograph jack.

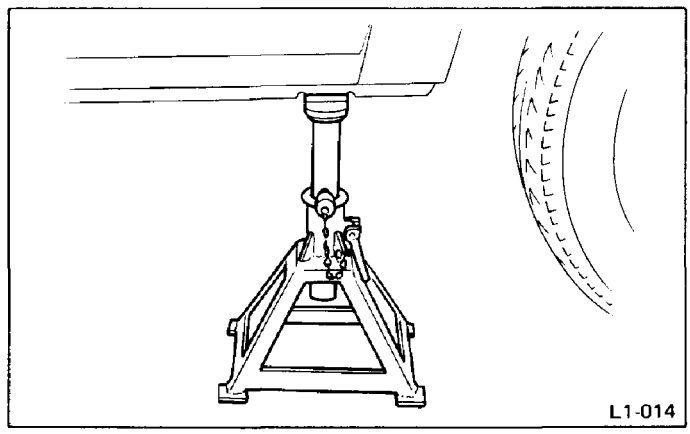

Fig. 37

4. Lift

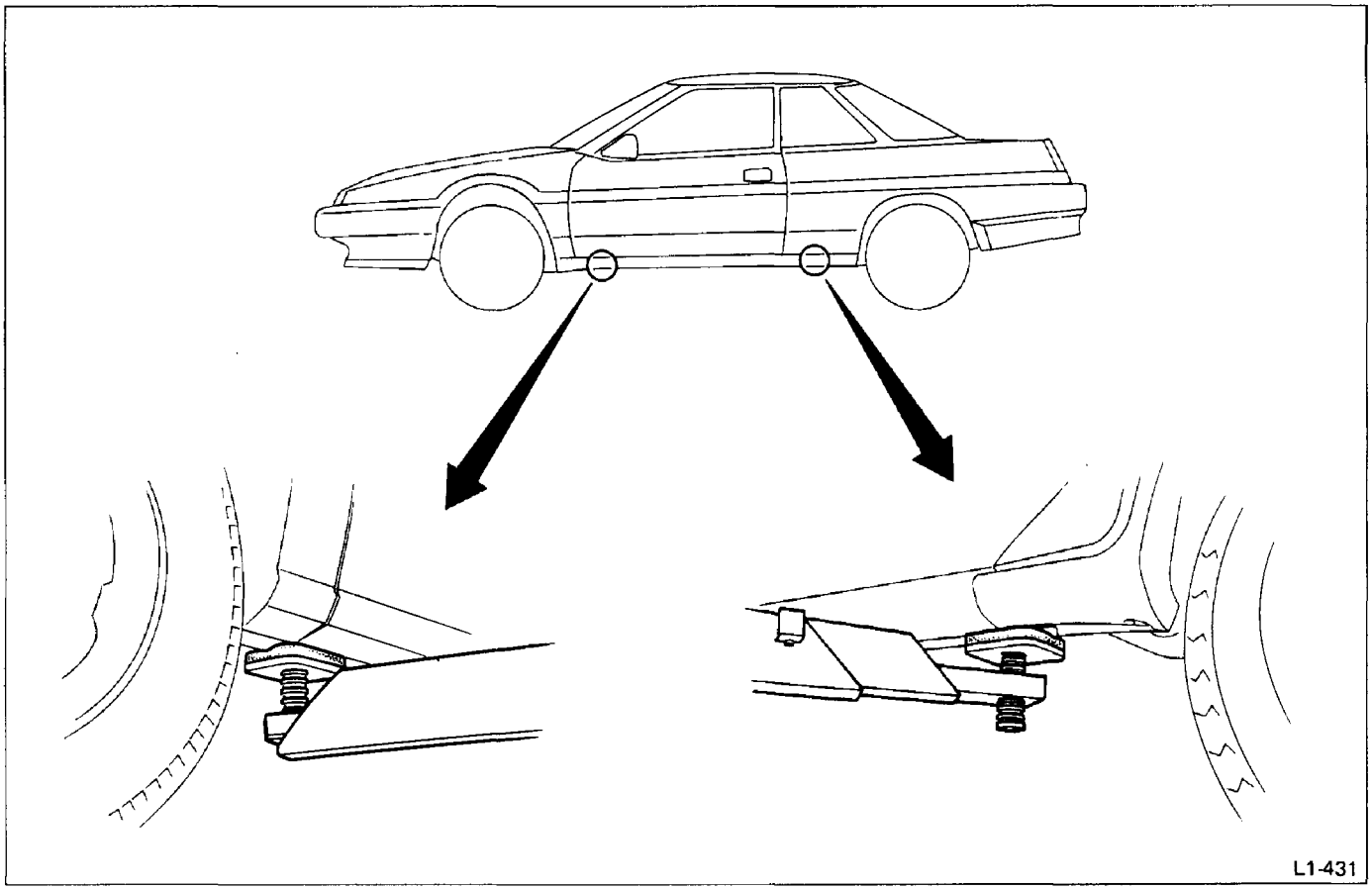

Fig. 38

a. Be sure to lift vehicle at the same four positions as those of pantograph jack.
b. Be careful not to set the lift at the air flap portion.

5. Towing and Tie-down Hooks

Avoid towing another car using front towing hooks.

Front

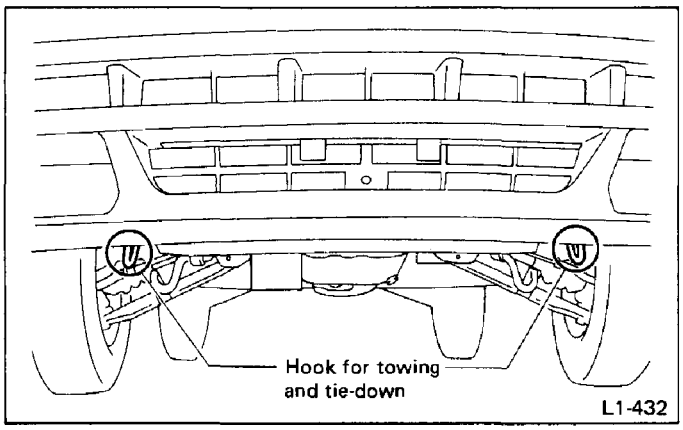

Fig. 39

Rear

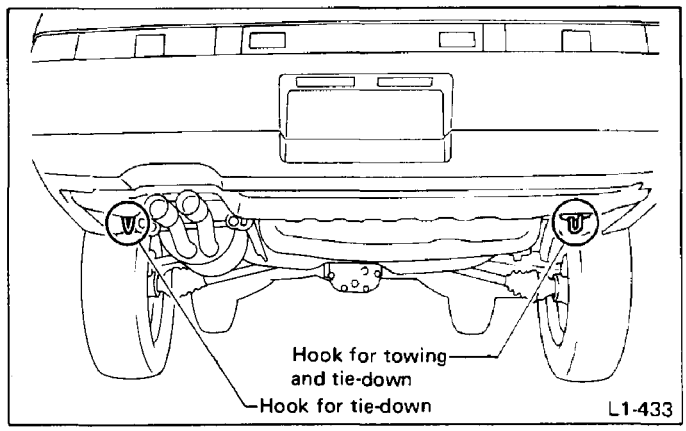

Fig. 40

PRE-DELIVERY INSPECTION

1-4

SUBARU

1988

	Page
PRE-ROAD TEST INSPECTION	3
ROAD TEST INSPECTION	19
POST-ROAD TEST INSPECTION	24

PRE-DELIVERY INSPECTION TABLE

	Page
PRE-ROAD TEST INSPECTION	3
☐ 1. HOOD OPERATION	3
☐ 2. DOOR OPERATION, DOOR LOCK AND REGULATOR	4
☐ 3. TRUNK LID, REAR GATE AND FUEL LID OPERATION	4
☐ 4. BRAKE FLUID LEVEL AND BRAKE PIPING INSTALLATION	5
☐ 5. BATTERY FLUID LEVEL AND BATTERY INSTALLATION	6
☐ 6. COOLANT LEVEL AND COOLING FAN INSTALLATION	6
☐ 7. ENGINE OIL LEVEL	7
☐ 8. TRANSMISSION AND DIFFERENTIAL GEAR OIL LEVEL	8
☐ 9. BELT TENSION ... See p.3 in Chap. 1-5	–
☐ 10. AIR CLEANER	9
☐ 11. JACK INSTALLATION	10
☐ 12. WINDSHIELD WASHER AND WINDSHIELD WIPERS	10
☐ 13. WHEEL NUTS FOR LOOSENESS AND TIRE INFLATION PRESSURE	11
☐ 14. SEAT ADJUSTER AND SEAT BELTS	11
☐ 15. FUSES	13
☐ 16. LIGHTS AND SWITCHES	13
☐ 17. PREPARATION FOR UNDERSIDE INSPECTION ... See p. 18 in Chap. 1-3	–
☐ 18. INSTALLATION OF STEERING COMPONENTS	15
☐ 19. EXHAUST PIPE AND MUFFLER	16
☐ 20. FUEL SYSTEM FOR LEAKAGE	16
☐ 21. HEIGHT CONTROL SYSTEM (Canada model) ... Air (Pneumatic) Suspension Vehicle	18
☐ 22. TILT/TELESCOPIC STEERING COLUMN	18
ROAD TEST INSPECTION	19
☐ 1. OPERATION OF INDICATOR LIGHTS AND GAUGES	19
☐ 2. TACHOMETER, RADIO, CLOCK, ETC.	20
☐ 3. DRIVING TEST	21
POST-ROAD TEST INSPECTION	24
☐ 1. IGNITION TIMING ... See p. 2 in Chap. 2-2	–
☐ 2. AUTOMATIC TRANSMISSION FLUID (ATF) LEVEL	24
☐ 3. POWER STEERING FLUID LEVEL	25
☐ 4. TOE	25
☐ 5. UNDERSIDE	26
☐ 6. WATER LEAKAGE	27
☐ 7. EXTERNAL APPEARANCE AND EQUIPMENT	27

Pre-road Test Inspection

1. HOOD OPERATION

CHECK POINTS

1. **Operation of hood release and lock**
2. **Condition of lock**
3. **Fitting of hood**

1. Check the operation of hood release and lock.

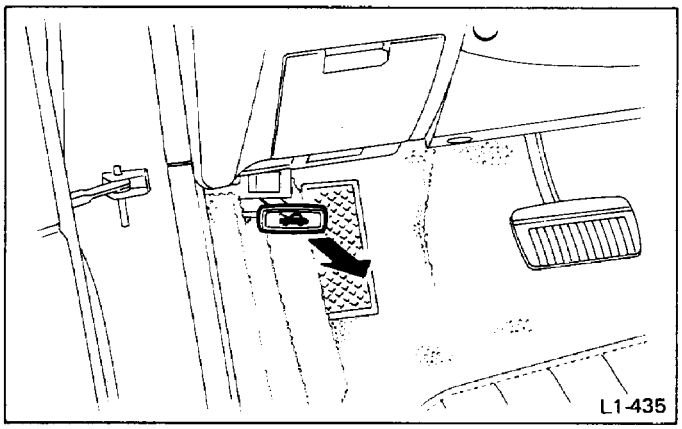

Fig. 1

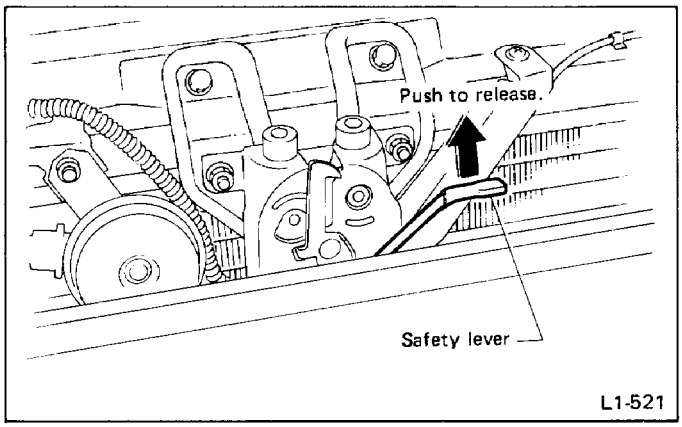

Fig. 2

2. Check the condition of lock and adjust if necessary.

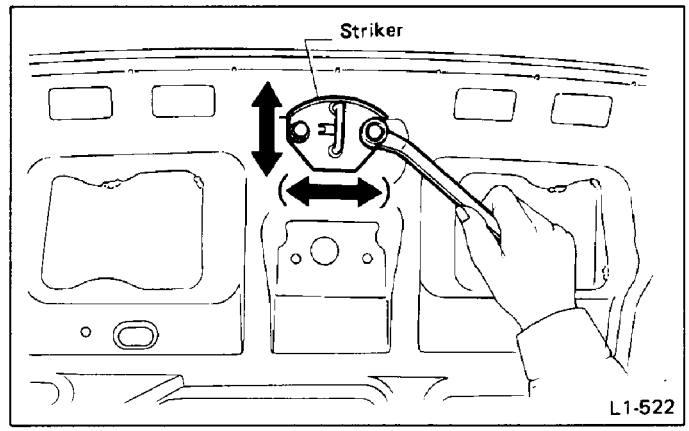

Fig. 3

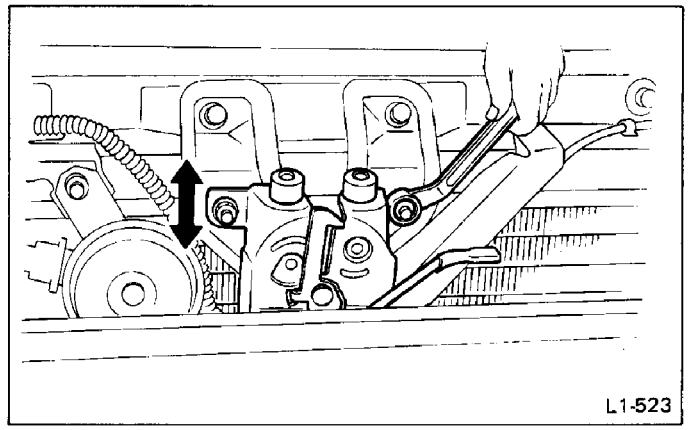

Fig. 4

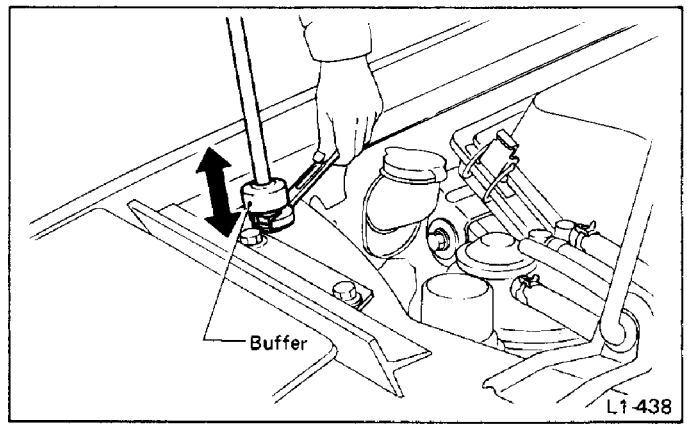

Fig. 5

3. Check the hood fitting and adjust if necessary.

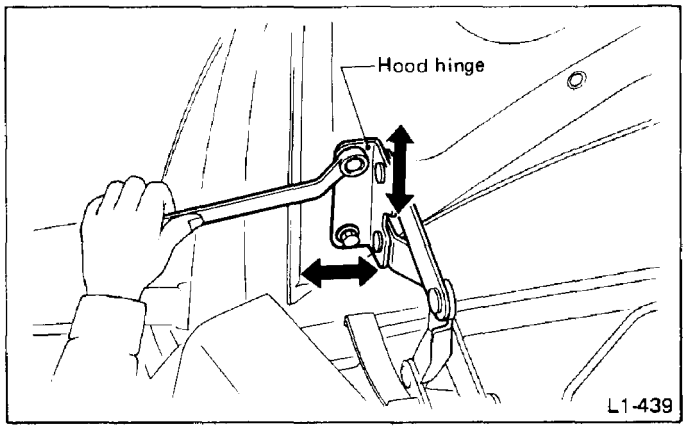

Fig. 6

2. DOOR OPERATION, DOOR LOCK AND REGULATOR

CHECK POINTS

1. Door "open-close" operation
2. Operation of door release and lock
3. Loose or damaged parts
4. Regulator handle's operation
5. Position of door window glass
6. Auto-door locking operation

2. Check the operation of door release and lock.

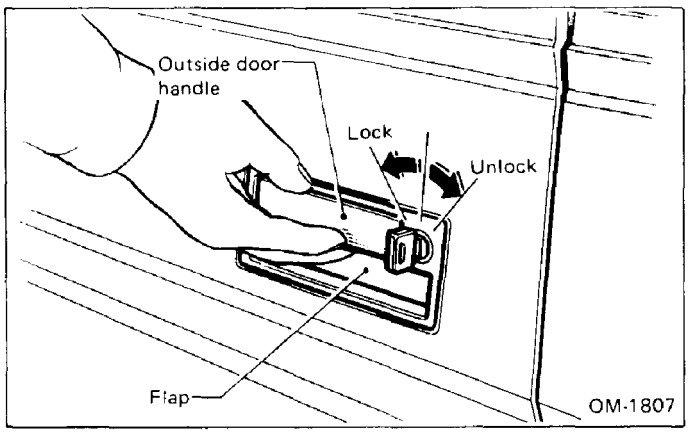

Fig. 7

a. Do not use excessive force when pulling the outer handle.
b. If the lock cylinder does not function properly, it must be replaced with a new one. However, if the door lock's operation is just unsmooth, it may be corrected by applying grease or oil to the sliding surfaces.

6. Check the auto-door locking operation.

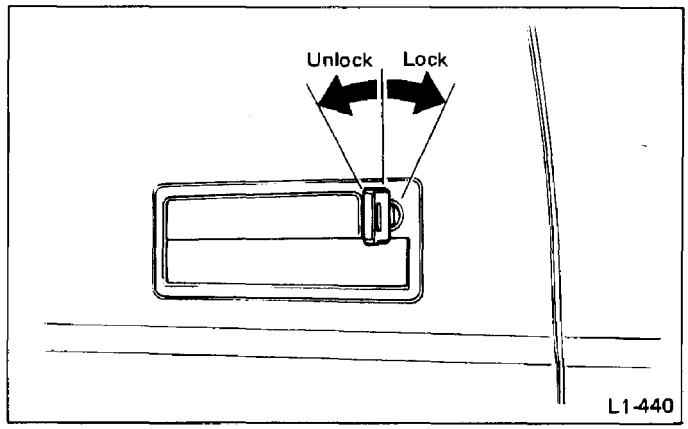

Fig. 8

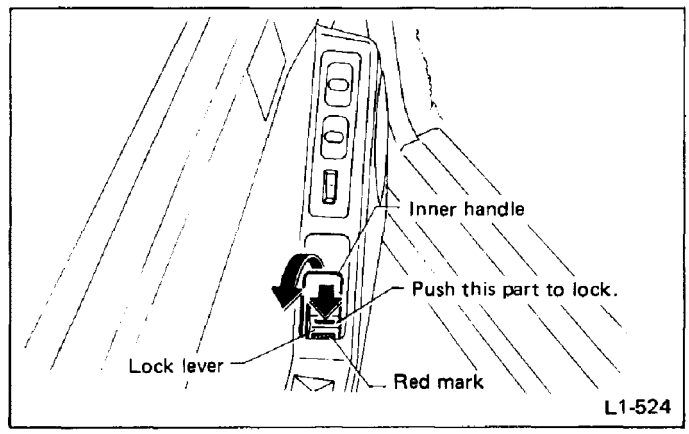

Fig. 9

3. TRUNK LID, REAR GATE AND FUEL LID OPERATION

CHECK POINTS

1. Trunk lid, rear gate and fuel lid "open-close" operation
2. Operation of trunk lid, rear gate and fuel lid release and lock
3. Fitting of trunk lid, rear gate and fuel lid

2. Check the operation of release and lock.
- Opener

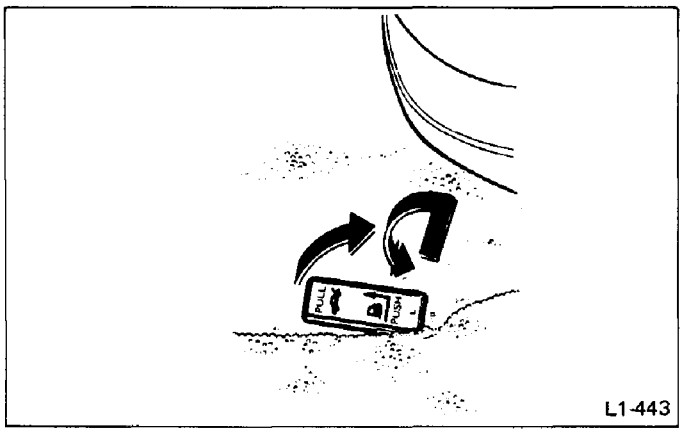

Fig. 10

- Trunk lid

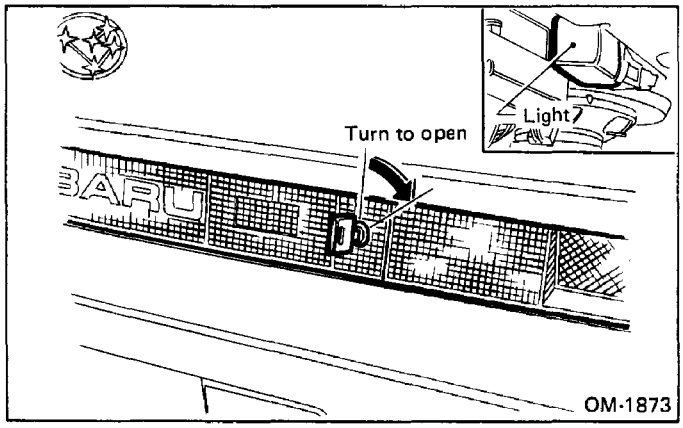

Fig. 11

- Models equipped with a trunk lid opener have an opener cancel lever. With the lever in the "ON" position, make sure that the opener lock cannot be released even if the opener lever is pulled from the inside of the passenger compartment. Also make sure that it can only be released from the outside with the key.

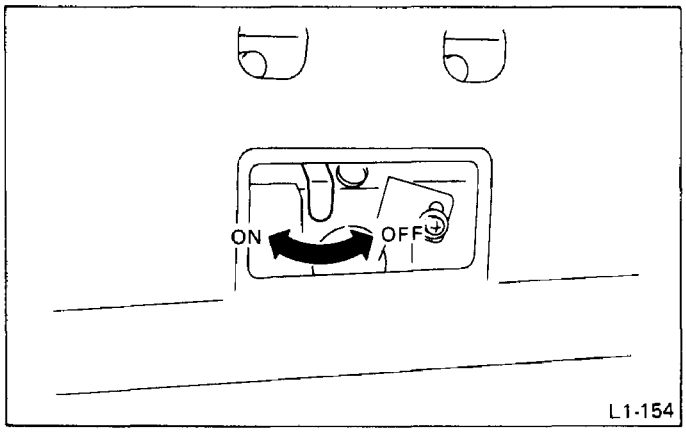

Fig. 12

4. BRAKE FLUID LEVEL AND BRAKE PIPING INSTALLATION

CHECK POINTS

1. **Fluid level in brake reserve tank**
2. **Wiring of fluid leveller and its operation**
3. **Brake booster, master cylinder, hill holder and pressure control valve for proper installation; brake pipe, brake hose and connectors for proper fitting**
4. **Leakage in any of the above**

1. Inspect the fluid level and add if necessary.

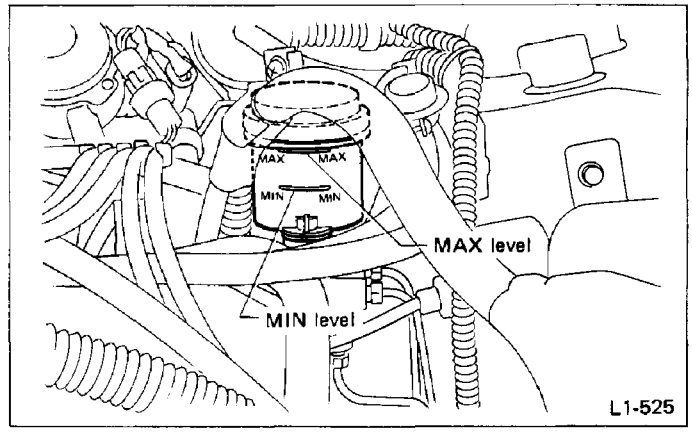

Fig. 13

- The fluid level must be kept at "MAX" level.
- Recommended brake fluid
  FMVSS No. 116, fresh DOT3 or 4 brake fluid

a. Do not mix different brands of brake fluid.
b. When adding brake fluid, be careful not to allow any dirt, water, or oil around the fluid tank to enter it.
c. Never use engine oil, gear oil, or any mineral oil.
d. Use extreme care not to allow any water to get into the fluid; water in the brake fluid will lower the fluid's boiling point and cause vapor-lock.
e. Use special care not to spill any brake fluid on the vehicle's painted surfaces, because it will quickly erode them. In case of an accident, wipe it off as quickly and as cleanly as possible.
f. If too much brake fluid is missing, check the brake line for possible leakage.
g. After adding brake fluid, any excess must be stored in a tightly sealed container.

2. Check the wiring of fluid leveller and its operation.

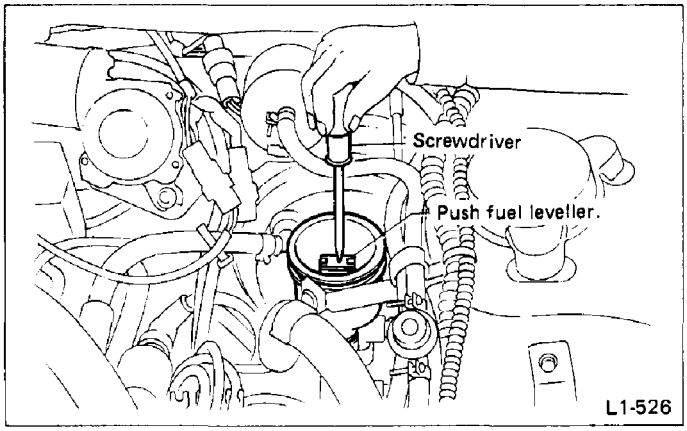

Fig. 14

When checking the operation of leveller, use clean screwdriver or the like and be careful not to allow dirt or dust to get into the tank.

5. BATTERY FLUID LEVEL AND BATTERY INSTALLATION

CHECK POINTS
1. Battery indicator sign
2. Specific gravity
3. Battery terminals
4. Battery installation and wiring

1. Inspect indicator on battery.

Blue .... OK

White ... Check electrolyte level.

1) If the level is anywhere between the upper and lower lines, recharge battery.
2) If the level is below the lower line, replace battery.

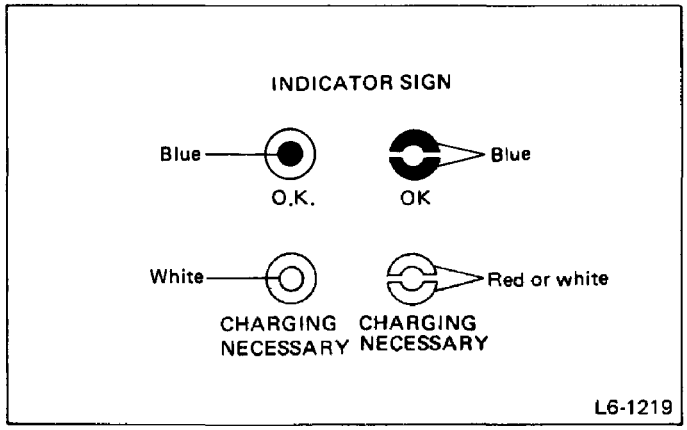

Fig. 15

2. Check the specific gravity and recharge if necessary.

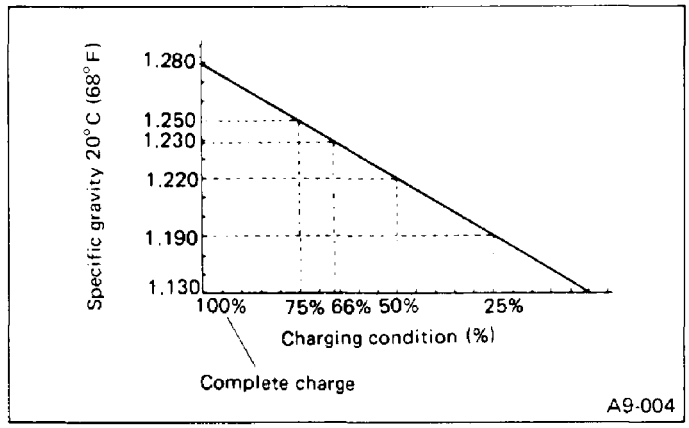

Fig. 16

a. Electrolyte is toxic; be careful handling the fluid.
b. Avoid contact with skin, eyes or clothing. Especially contact with eyes, flush with water for 15 minutes and get prompt medical attention.
c. Batteries produce explosive gasses. Keep sparks, flame, cigarettes away.
d. After adding distilled water, run the engine and recharge the battery to mix the additional water with the fluid. After recharging, measure the fluid's specific gravity.
e. Be careful not to spill any battery fluid onto the vehicle.
f. Ventilate when recharging or using in enclosed space.
g. Prior to recharging, any corroded terminals should be cleaned with a brush and common baking soda solution.
h. When recharging the battery without removing it from the vehicle, be sure to disconnect the cable from its negative terminal.
i. The battery should not be recharged with 10A or more.

6. COOLANT LEVEL AND COOLING FAN INSTALLATION

CHECK POINTS
1. Coolant level
2. Cooling fan motor and wiring
3. Water leakage and hose damage

1. Inspect coolant level and add if necessary.

- Always inspect and add at reserve tank when engine is cold.

Reserve tank is equipped with dark green cap which can be removed with screwdriver.

- The level must be kept at "FULL" level.

a. Use only genuine SUBARU Coolant (P/N000016218).
b. Avoid using only water any coolant or other than this designated type to prevent corrosion.
c. SUBARU's engine is aluminum alloy, and so special care is necessary.
d. If reserve tank is empty, check coolant level in engine. Add coolant up to filler neck of engine, if necessary.
e. The radiator is of the pressurized type. Never attempt to open the radiator cap when the coolant's temperature is high; otherwise boiling water will spurt out. Be sure to wait until the engine cools down before opening the radiator cap.

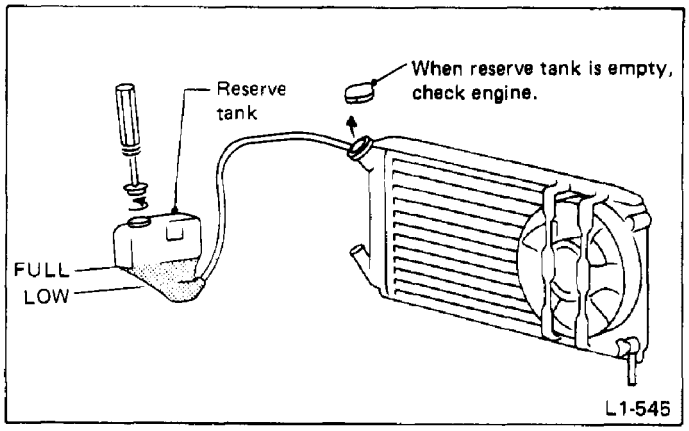

Fig. 17

3. Inspect for water leakage and hose damage.

When retightening the hose clamps, be careful not to overtighten them, as doing so could damage the hose.

7. ENGINE OIL LEVEL

CHECK POINTS

1. Engine oil level

1. Inspect the engine oil level and add oil if necessary.

(1) Except XT6

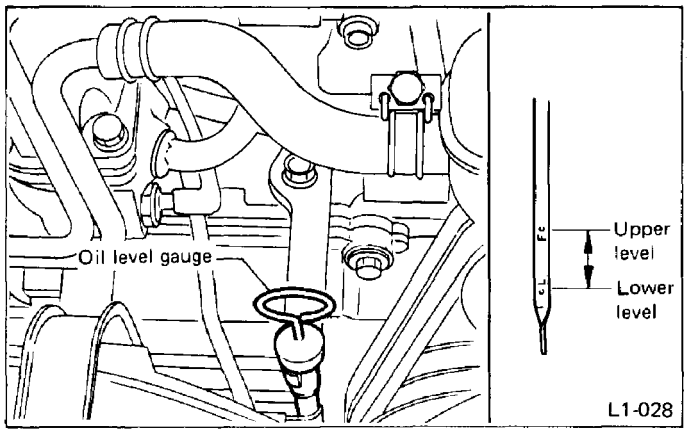

Fig. 18

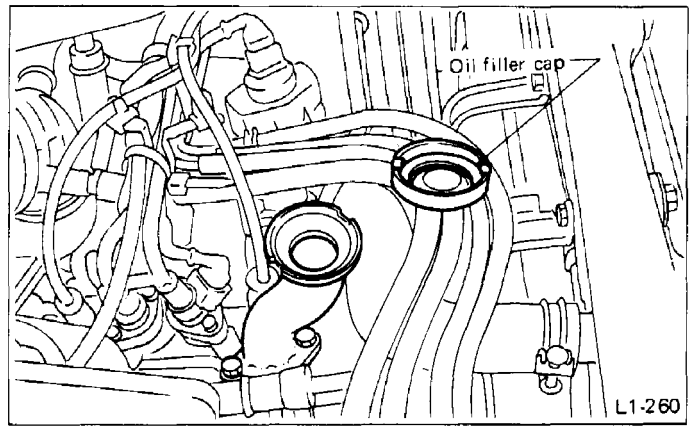

Fig. 19

(2) XT6

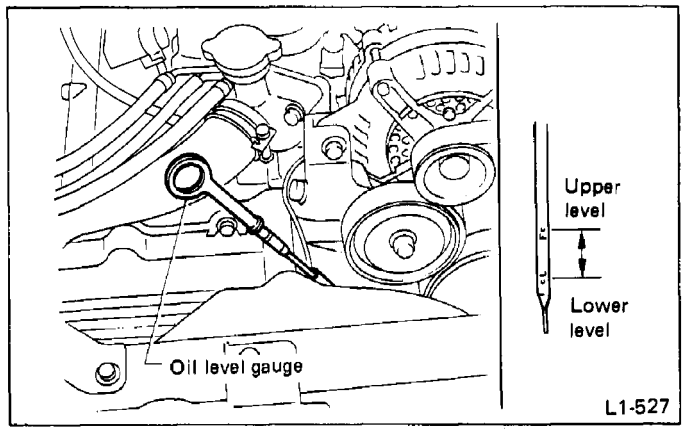

Fig. 20

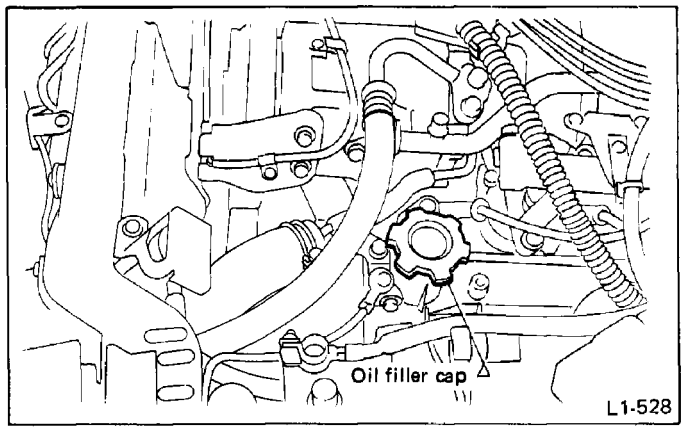

Fig. 21

- The level should be within the specified range marked on the gauge.

Shut the engine off if it is running, and wait at least five minutes before checking the oil level.

- Recommended oil

ITEM	API Classification	SAE viscosity No. and Applicable Temperature
		(°F) −30 0 30 60 90
		(°C) −34 −18 0 16 32
• Engine oil	SE	10W-30, 10W-40
	SE	5W-30

L1-445

Fig. 22

a. SAE 5W-30 is not recommended for sustained high speed driving.
b. If vehicle is used in desert areas or areas with very high temperatures or for other heavy dry application, the following viscosity oils may be used"
"30, 40, 10W-50, 20W-40, 20W-50"
c. When replenishing oil, it does not matter if the oil to be added is a different brand from that in the engine, however, use oil having the API classification and SAE viscosity No. designated by SUBARU.

8. TRANSMISSION AND DIFFERENTIAL GEAR OIL LEVEL

CHECK POINTS

1. Level of transmission gear oil for manual transmission
2. Level of differential gear oil for automatic transmission
3. Level of rear differential gear oil for 4WD model.

1. Check the transmission gear oil level (MT) and add oil if necessary.
- The level should be within the specified range marked on the gauge.

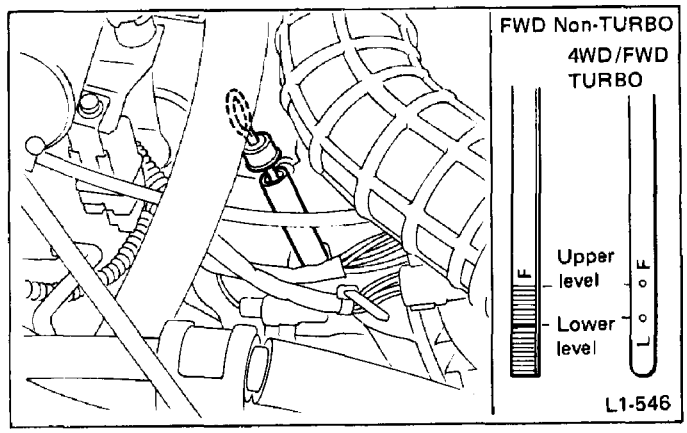

Fig. 23

2. Check the differential gear oil level (AT) and add oil if necessary.
- The level should be within the specified range marked on the gauge.

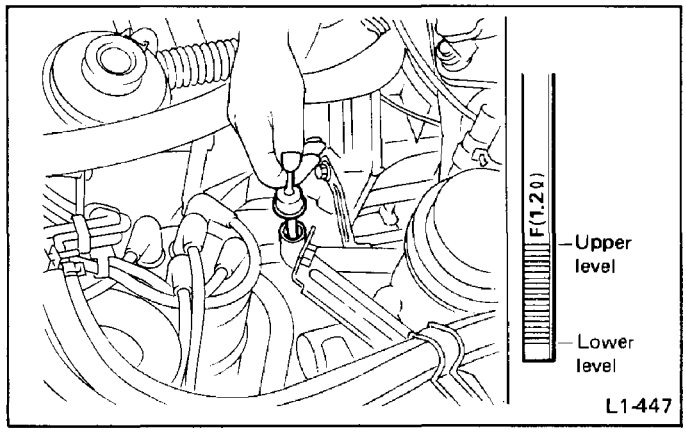

Fig. 24

3. Check the rear differential gear oil level (4WD), and add oil if necessary.
1) Place the vehicle on level ground and check with the engine stopped.
2) Remove the filler plug of the differential.
3) Oil level should be kept at the bottom of the filler hole.
4) If the oil level is below the bottom edge of the hole, add oil up to the bottom edge.
5) After adding oil, securely tighten filler plug with aluminum gasket in place.

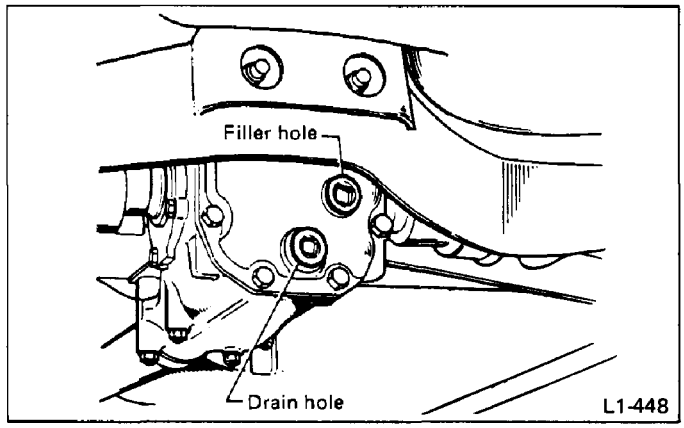

Fig. 25

- Recommended oil

ITEM	API Classification	SAE Viscosity No. and Applicable Temperature
• Transmission and differential gear oil • 4WD rear differential gear oil	GL-5	(°F) −30 0 30 60 90 (°C) −34 −18 0 16 32 90 85W 80W 75W-90, *80W-90

L1-090

Fig. 26

a. Each manufacturer uses different base oils and additives. Thus, do not mix brands.
b. *For differential gear oil (AT).

10. AIR CLEANER

CHECK POINTS

1. **Contamination of air cleaner element**
2. **Related parts**

1. Check the air cleaner element for contamination or the presence of foreign matter.

MPFI

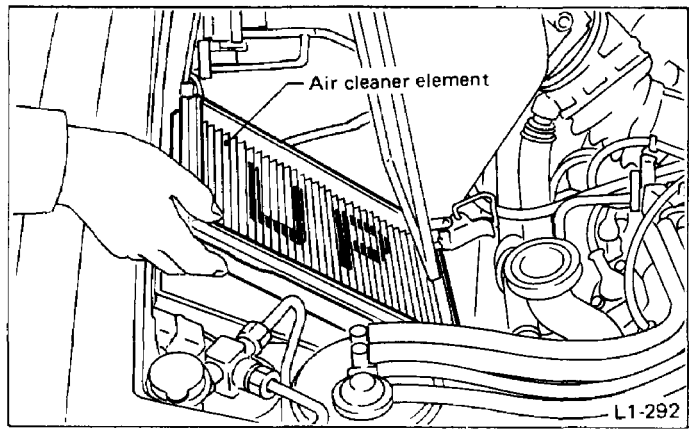

Fig. 27

a. The air cleaner element is a viscous type, which should not be washed or cleaned.
b. If the air cleaner element is broken or damaged, replace it with a new one.

11. JACK INSTALLATION

CHECK POINTS
1. Installed condition of jack

1. Check the installed condition of jack.

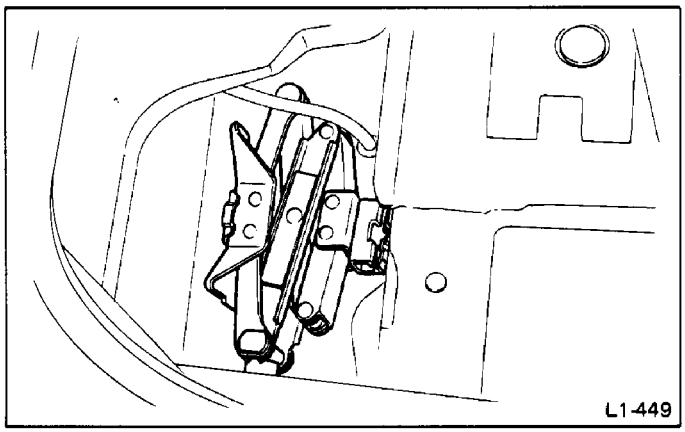

Fig. 28

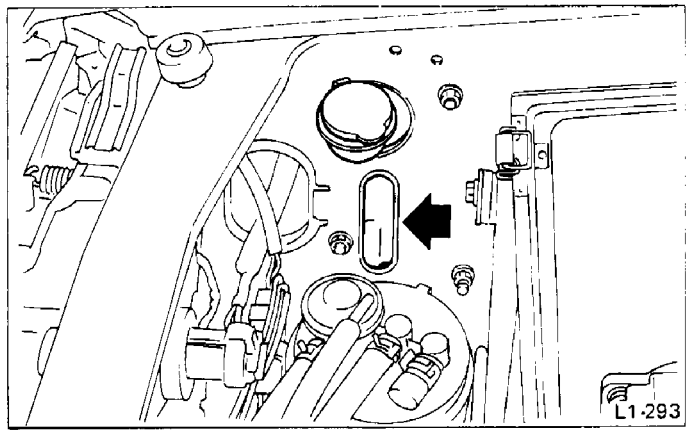

Fig. 29

12. WINDSHIELD WASHER AND WINDSHIELD WIPERS

CHECK POINTS
1. Installation of windshield washer tank
2. Checking of fluid level
3. Direction and quantity of windshield washer fluid sprayed
4. Operation of windshield wiper and washer

1. Check the fluid level.
- If the level is not to the filler port level, add washer fluid to the filler port level.
  In areas where water freezes in winter, use SUBARU windshield washer fluid (003406401) or an equivalent.

The relationship between fluid to water ratio and freezing point is as follows:

Fluid to water ratio (%)	Freezing point °C [°F]
30	−12 [10]
50	−20 [−4]
100	−45 [−49]

2. Inspect the direction and quantity of windshield washer fluid sprayed.
1) If the quantity of washer fluid ejected is insufficient:
Check the level of fluid in the reservoir, the nozzle for clogs and the hose for twists, or other deformities. If these are all normal, suspect motor failure.
2) If the position at which washer fluid is ejected is wrong:
Using an eyeleteer or similar tool, adjust the direction of the nozzle, be careful not to damage the nozzle hole.
3. Check the operation of windshield wiper and washer.

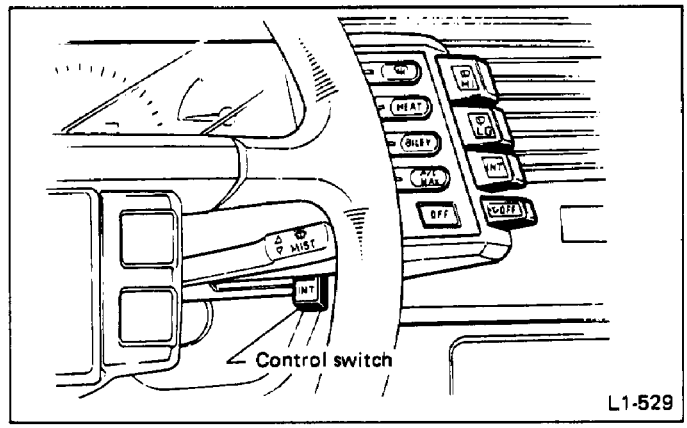

Fig. 30

a. Before checking the windshield wiper, clean the windshield glass.
b. Do not operate the windshield wiper when the reservoir is empty.
c. Before operating the windshield wipers, be sure to eject windshield washer fluid onto the windshield.
If the windshield is dry, the wipers' operating speed and angle of operation will be different from when it is wet.
d. Do not operate the windshield washer continuously for more than 10 seconds at a time.

13. WHEEL NUTS FOR LOOSENESS AND TIRE INFLATION PRESSURE

CHECK POINTS

1. **Wheel nut tightening torque**
2. **Tire inflation pressure and tire specification**
3. **Damage to tire and rim**

1. Check the wheel nut tightening torque.

Tightening torque:
78 – 98 N·m (8.0 – 10.0 kg-m, 58 – 72 ft-lb)

When checking the wheel nuts, be sure to use a torque wrench, and tighten the nuts to the specified torque.

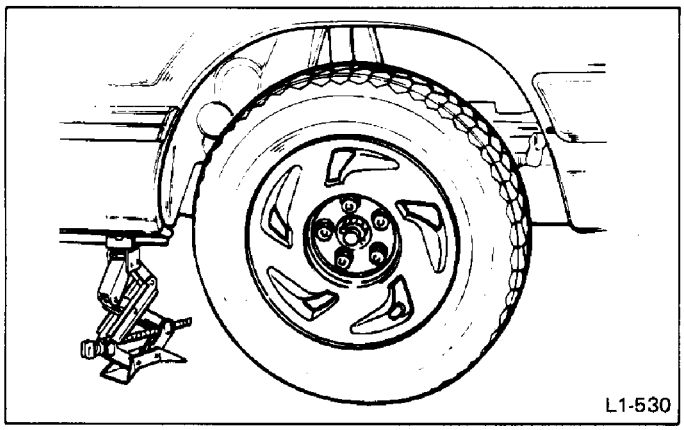

Fig. 31

2. Adjust tire inflation pressure and check tire specification.

After inspecting and adjusting the tire pressure, be sure to replace the valve cap.

14. SEAT ADJUSTER AND SEAT BELTS

CHECK POINTS

1. **Front and rear seats, and their facing materials**
2. **Front seat operation**
3. **Rear seat folding operation**
4. **Seat belts and their fit**

2. Check front seat operation.

- Sliding

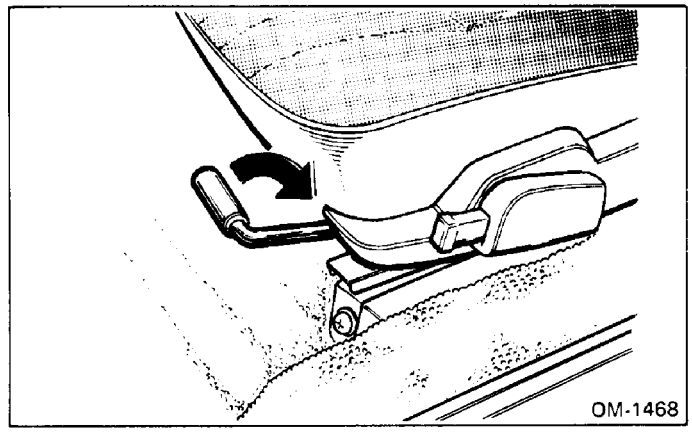

Fig. 32

- Reclining

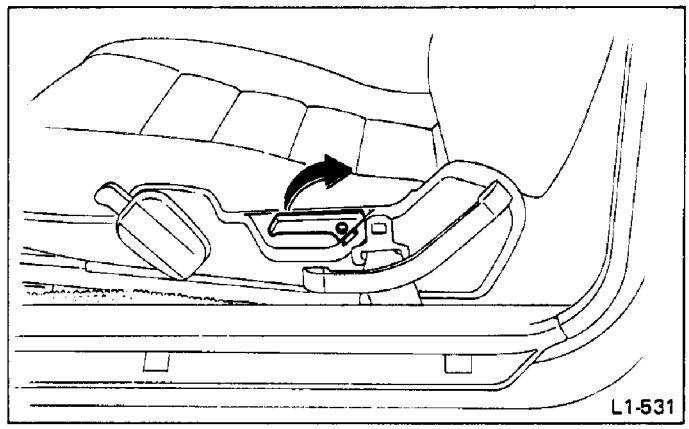

Fig. 33

- Lumbar support

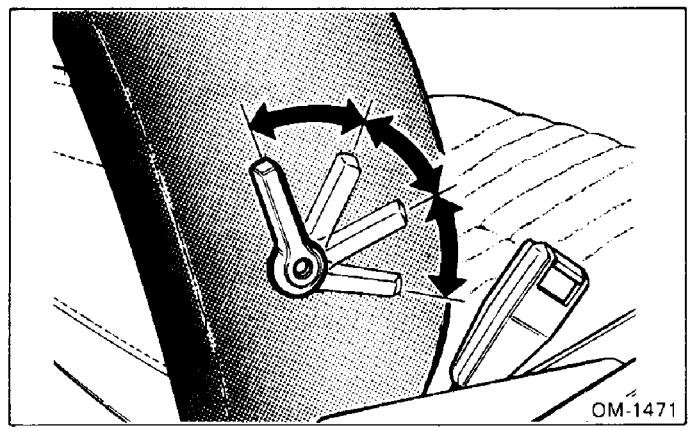

Fig. 34

- Lifter

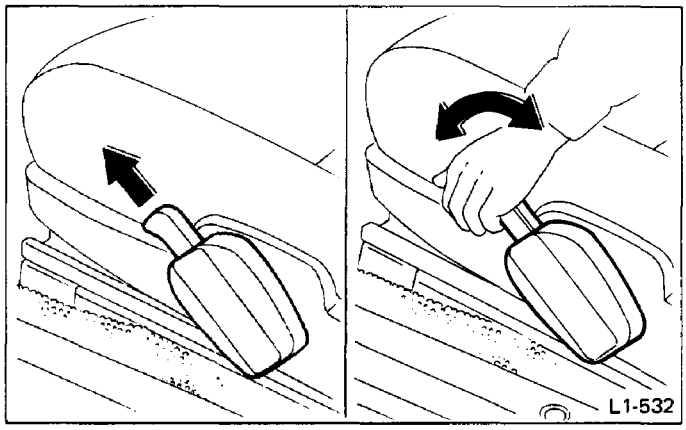

Fig. 35

- Head restraints
  Up-and-down

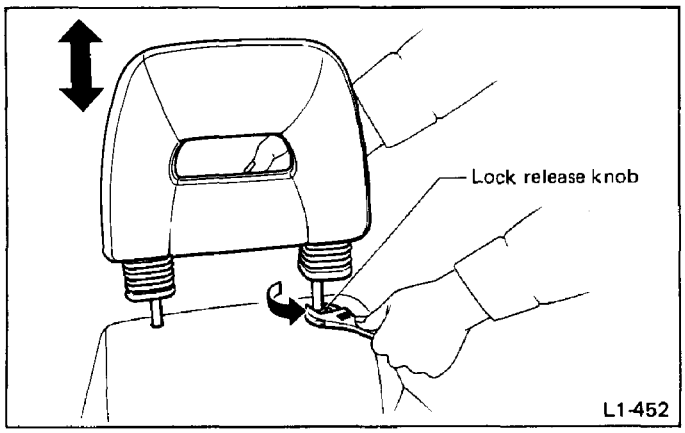

Fig. 36

- Fore-and-aft

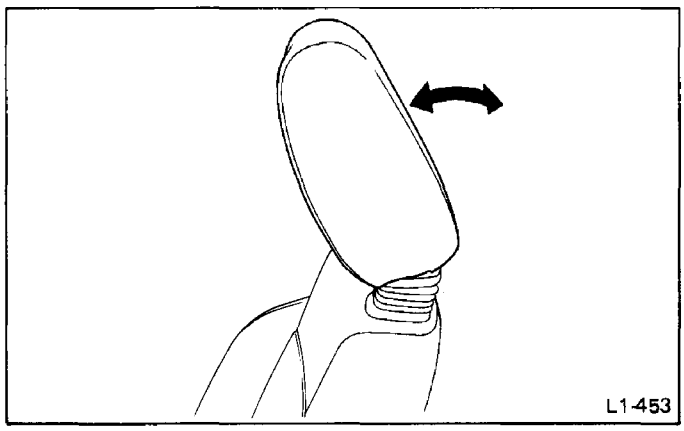

Fig. 37

- Getting in and out of the rear seat

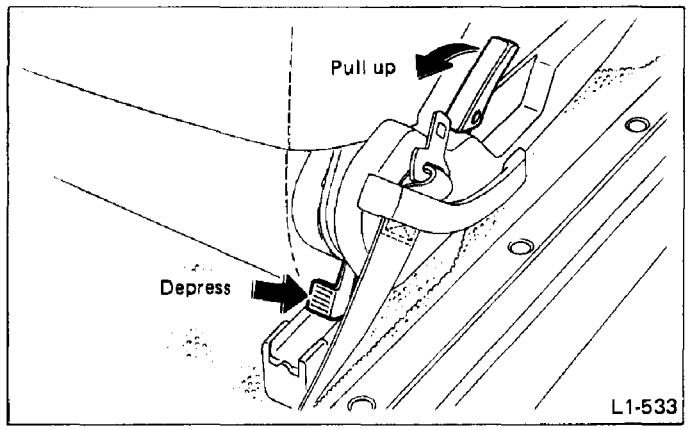

Fig. 38

3. Check rear seat folding operation.

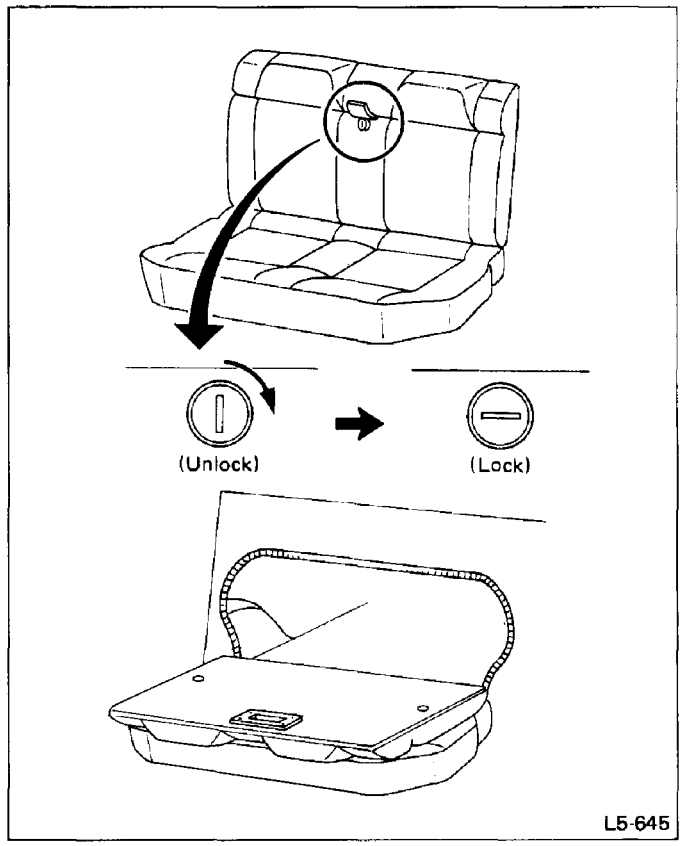

Fig. 39

4. Check seat belts and their fit.

The seat belt warning light on the instrument panel comes on for approximately six seconds with the ignition-starter switch "ON".
The warning chime sounds if the driver's lap belt is not fastened or the emergency release buckle of the automatic shoulder belt is released.
Make sure that the warning system works normally.

Automatic Shoulder Belt

a. While inserting the shoulder belt into the emergency release buckle, open and close the corresponding door to check that the shoulder anchor moves smoothly without binding or play.
b. Check that the tongue releases when the emergency release button is pressed, and that it latches properly with a click when inserted.

15. FUSES

CHECK POINTS
1. Fuse installation
2. Spare fuse

1. 2. Check fuse installation and spare fuse.

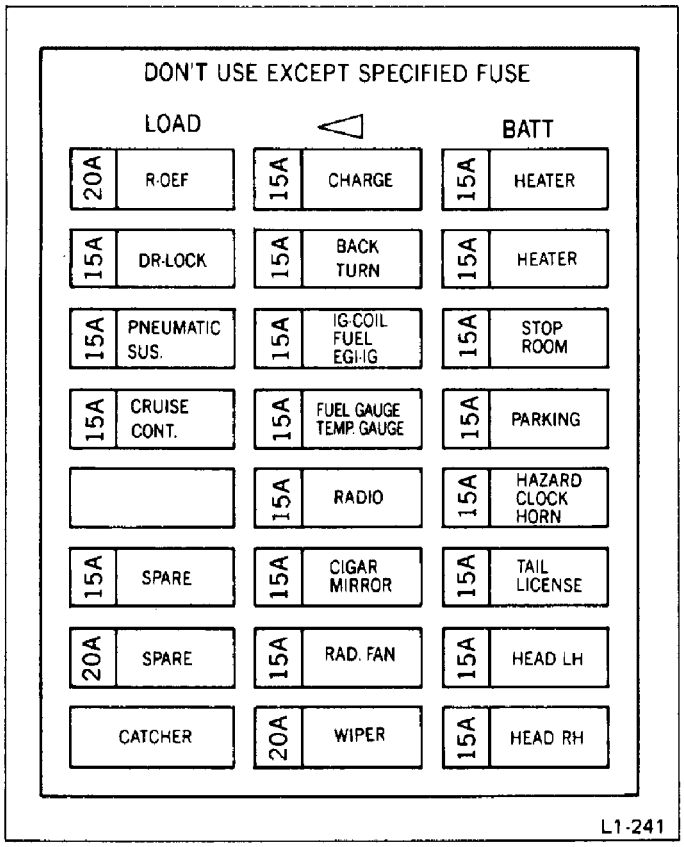

Fig. 40

16. LIGHTS AND SWITCHES

CHECK POINTS
1. Visual inspection of lights (installation, damage, dirty lenses, water inside, etc.)
2. Operation of all lights and switches
3. Horn operation
4. Operation of heater and ventilator
5. Removing the clip for room light switch

2. Check the operation of all lights and switches.

Light switch

The light switch operates with the ignition switch turned "ON".
The headlights are raised or lowered and turned on or off using this switch.

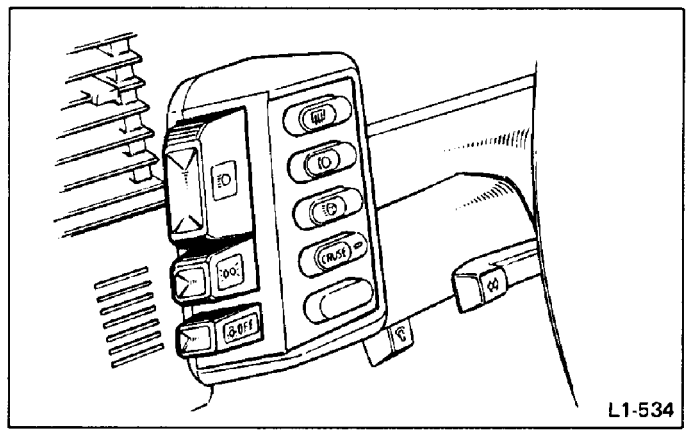

Fig. 41

Retractable headlight switch

This switch raises or lowers the headlights without the lights being turned on or off.
The switch when pressed, raises the headlights to the set position.
Pressing it again lowers the lights and stores them away.

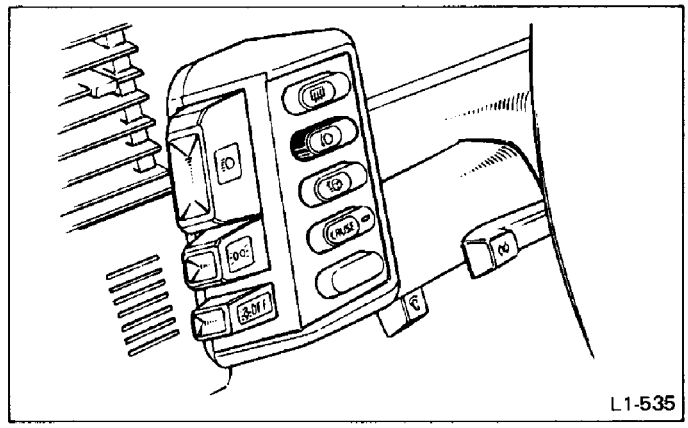

Fig. 42

High/low beam switch

When the light switch " ≡D " is turned ON, the headlights illuminate with high or low beam. Each time the lever is pulled until it clicks, high or low beam is selected alternately. When the headlights are on high beam, the indicator " ≡D " illuminates.

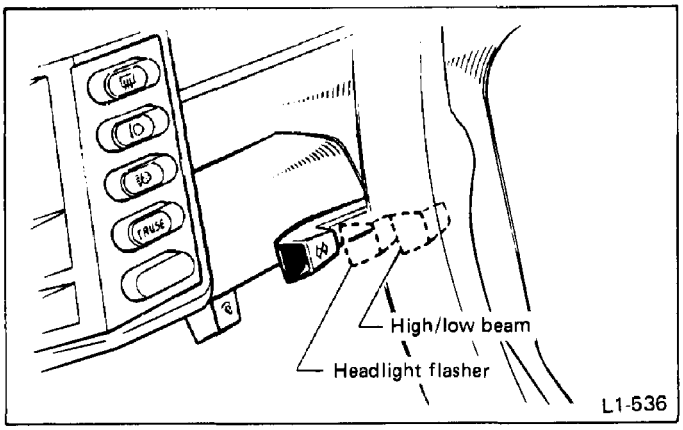

Fig. 43

Turn signal switch

Move the lever up or down. Once the turn is completed, the turn signal lever automatically returns. After a slight turn the lever may not return and in this case, you should cancel it by hand.
For a lane change, move the lever part way, then hold it there. The lever will return to its original position when it is released.

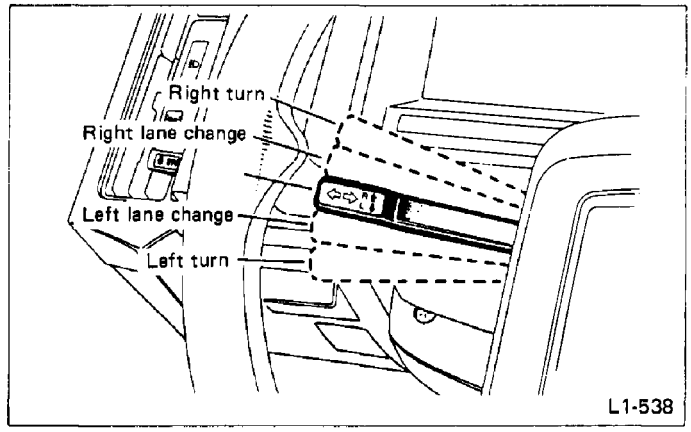

Fig. 45

Headlight flasher switch

To flash the headlights.
1. Pull the lever lightly toward you and release it, and the lights are raised.
2. Pull the lever lightly again, and the high beam comes on.

The headlights lower automatically in about four seconds once the lever is released. If the lever is released after being kept pulled for four or more seconds, headlights immediately lower.
The lever will return automatically once it is released.
The headlight flasher works independently of the lights switch.

Do not hold the lever for more than just a few seconds.

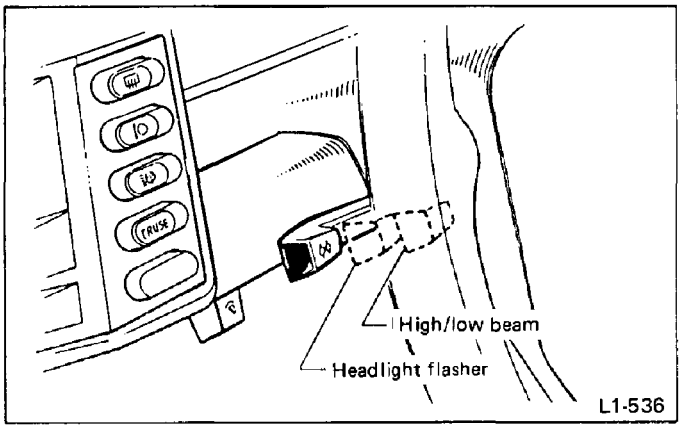

Fig. 44

Illumination brightness control switch

When light switch "≡DC≡" or "≡D" is ON, brightness of the instrument lights, for heater control, and lighting switch identification lights, wiper and washer switch, fan motor switch, etc., is adjusted by sliding the switch knob.
As the knob slides toward right side, brightness reduces.

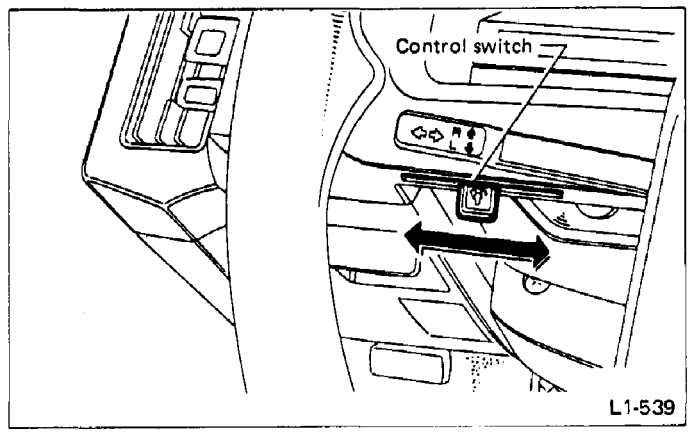

Fig. 46

Hazard warning light switch

When the switch knob is pushed, all turn-signal lights flash as a hazard warning regardless of the ignition switch position for use in an emergency stop with the ignition either off or on. To stop flashing, push the opposite knob.
Turn signals do not function when the hazard warning switch is on.

Avoid leaving the lights on for long time as it discharges the battery.

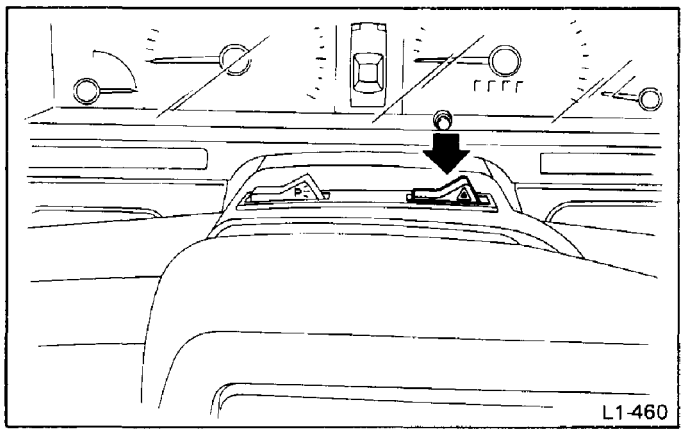

Fig. 47

Parking light switch

When the switch knob is pushed, the parking lights all go on regardless of the ignition switch position.

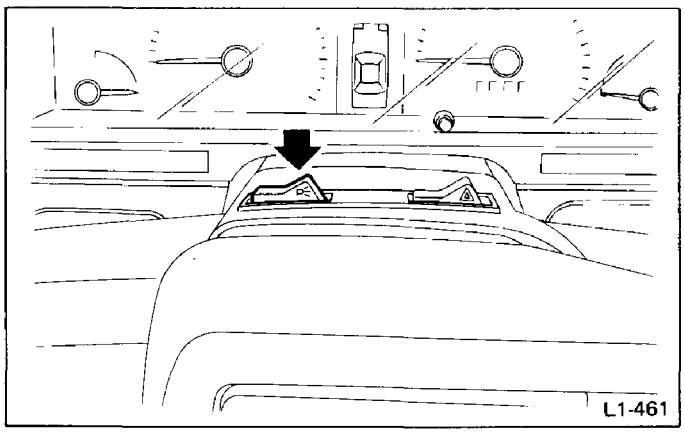

Fig. 48

18. INSTALLATION OF STEERING COMPONENTS

CHECK POINTS

1. **Installation of universal joints**
2. **Steering gear box for looseness, play, or backlash, and boots for damage**
3. **Tie-rod and tie-rod end for proper installation, or damage**

1. Check the universal joint for looseness.

Tightening torque:
21 – 26 N·m (2.1 – 2.7 kg-m, 15 – 20 ft-lb)

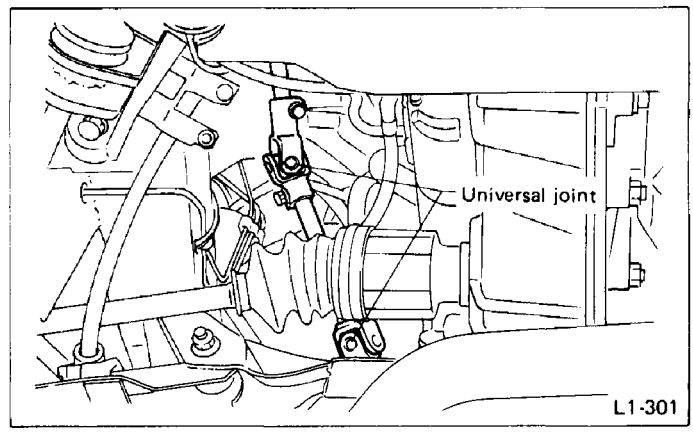

Fig. 49

When checking, turn IG switch to "ACC" position.

2. Check the gear box mounting bolt for looseness.

Tightening torque:
47 – 71 N·m (4.8 – 7.2 kg-m, 35 – 52 ft-lb)

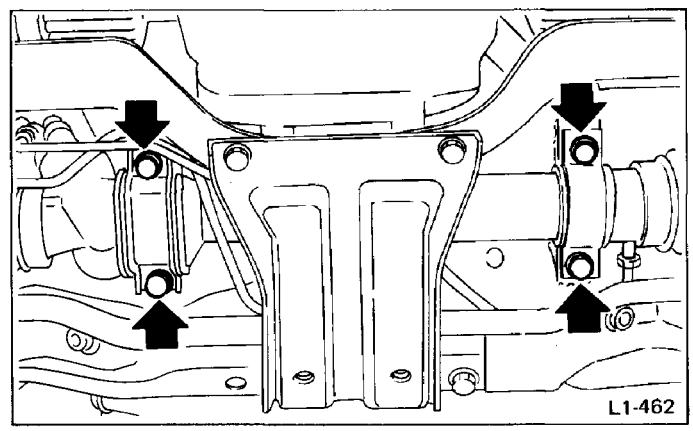

Fig. 50

Carefully check the root portion of the boots, and the condition of the clip.

3. Check the tie-rod end lock nut for looseness.

Tightening torque:
78 – 88 N·m (8.0 – 9.0 kg-m, 58 – 65 ft-lb)

19. EXHAUST PIPE AND MUFFLER

CHECK POINTS
1. Exhaust system's installation 2. Exhaust gas leakage.

1. Check the exhaust system's installation for looseness, damage and possible interference with other parts.

When the engine is running, and for a short time after it is stopped, the exhaust system remains very hot; use extreme care and don't get burnt during this evolution.

Tightening torque:
Front exhaust pipe to engine
25 – 29 N·m (2.6 – 3.0 kg-m, 19 – 22 ft-lb)
Front exhaust pipe to rear exhaust pipe
13 – 23 N·m (1.3 – 2.3 kg-m, 9 – 17 ft-lb)
Rear exhaust pipe to muffler
42 – 52 N·m (4.3 – 5.3 kg-m, 31 – 38 ft-lb)
Front exhaust pipe to bracket
25 – 34 N·m (2.5 – 3.5 kg-m, 18 – 25 ft-lb)
Tail pipe cutter to muffler
29 – 39 N·m (3.0 – 4.0 kg-m, 22 – 29 ft-lb)

20. FUEL SYSTEM FOR LEAKAGE

CHECK POINTS
1. Installation of fuel hose and pipe. And condition of clamps 2. Fuel system for leakage

1. Check the fuel and air breather pipes visually or by feeling with your fingers from the underside. Retighten the clamps if necessary.

a. When retightening the clamps, do not tighten them excessively.
b. When checking the fuel system, use extreme care to prevent accidental fires.

2. Without starting the engine, turn the ignition switch to the ON position, and operate the fuel pump to pressurize the fuel system. Then check the fuel system for leakage.
Check the fuel hose's layout, and also search for interference with other parts, twists, or damage, check the condition of the clamps.

1. 1800 cc

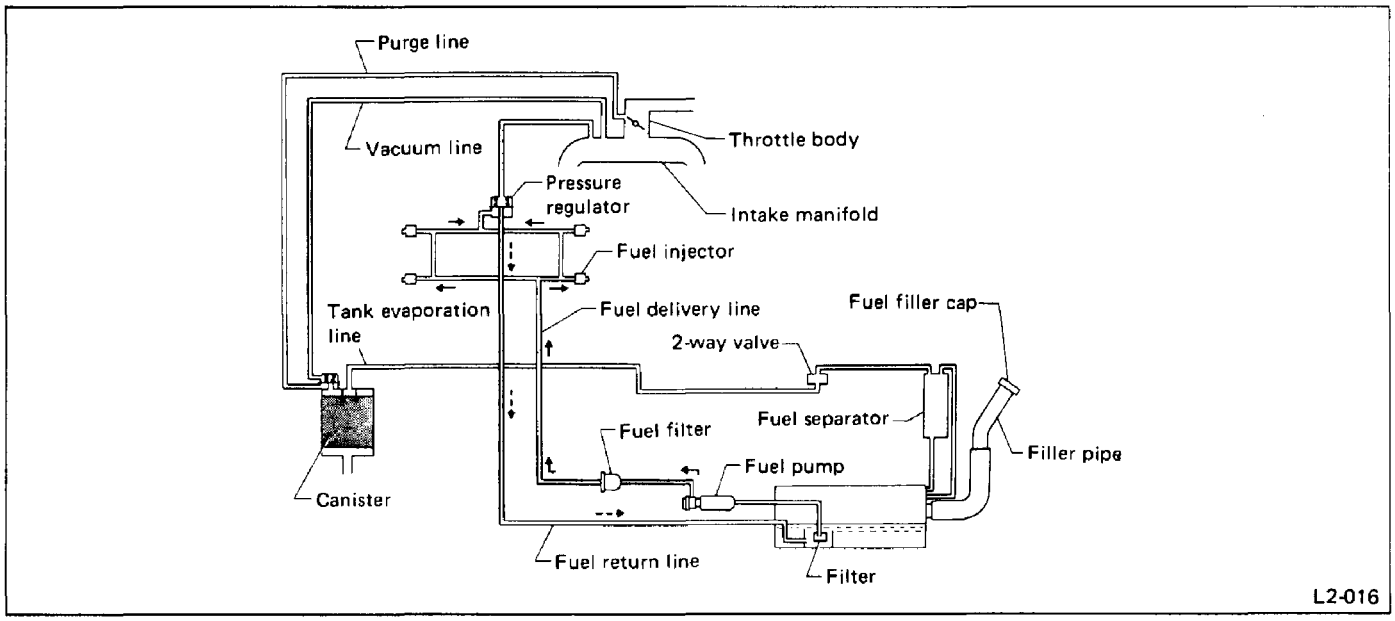

Fig. 51

2. 2700 cc

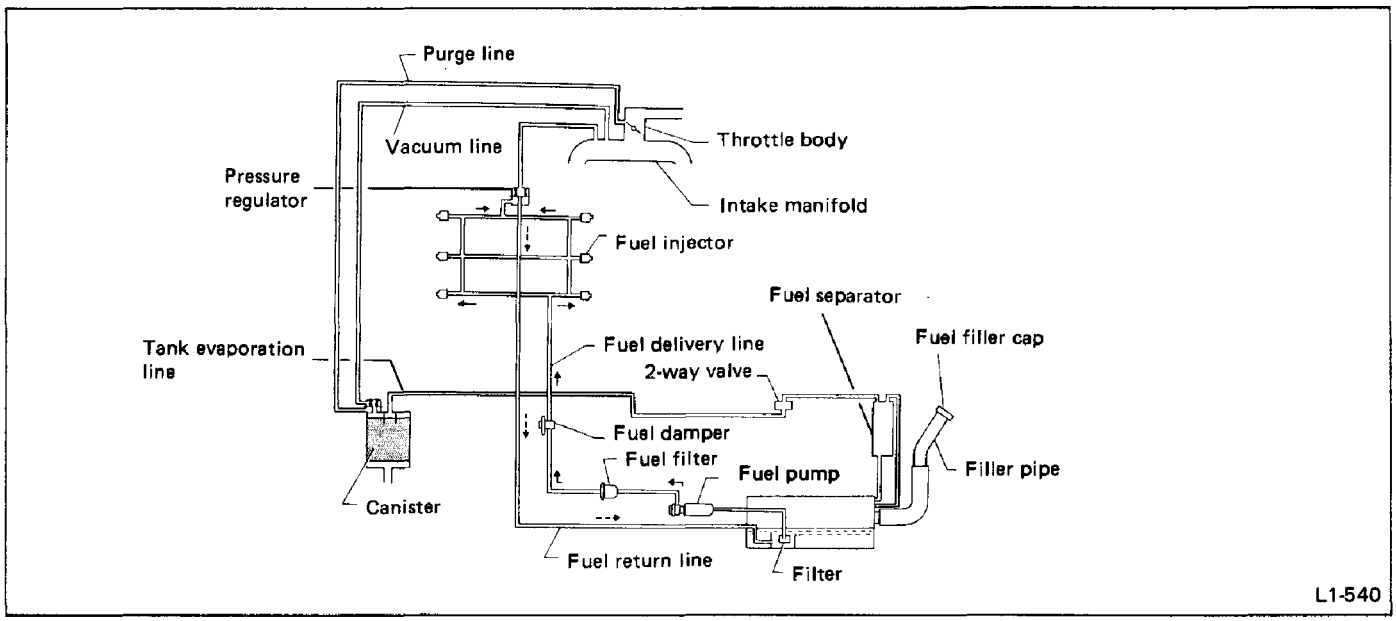

Fig. 52

21. HEIGHT CONTROL SYSTEM (Canada model) ·····Air (Pneumatic) Suspension Vehicle

CHECK POINTS

1. Function of height control system (Manual control)

1. Check the function of height control changeover.
1) Unload the car to establish "curb weight" condition.
2) Start engine and turn height control switch to "NORMAL."
Ensure ground clearance is automatically set to the NORMAL value as indicated in Chapter 4-1.
3) Check air suspension compressor to ensure it stops.
If it still is in operation, wait until it stops.

The above procedure is required to determine whether or not, car height control is in good order and should not be omitted.

4) After compressor stops, set height control switch to "HIGH" and check the following:
   a) Check if car attains the specified height within 30 seconds.
   b) Check if the HIGH pilot lamp is on.
   c) Check if compressor stops within 150 seconds after setting height control switch to "HIGH."
5) Set height control switch to "NORMAL" after compressor has stopped. Check if car returns to the specified NORMAL position within 30 seconds.
6) If abnormality is noted in steps 1) through 5) above, refer to Chapter 4-1 and repair as necessary.

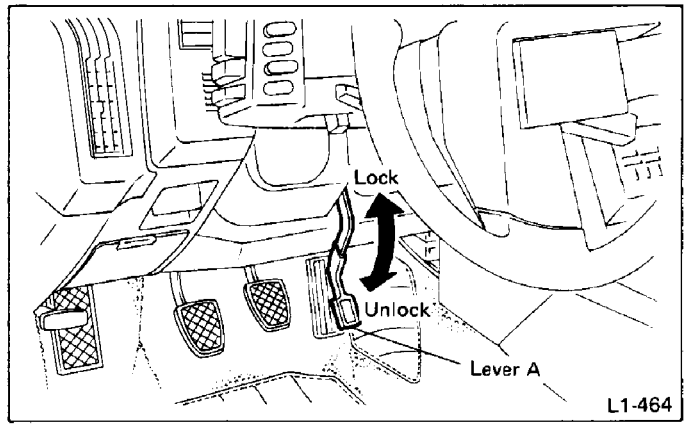

Fig. 53

2. Check the operation of telescopic steering mechanism.
Unlock lever B by turning it counterclockwise and check that steering wheel can be adjusted along the axial direction.
Lock lever B to ensure steering wheel is held in place.

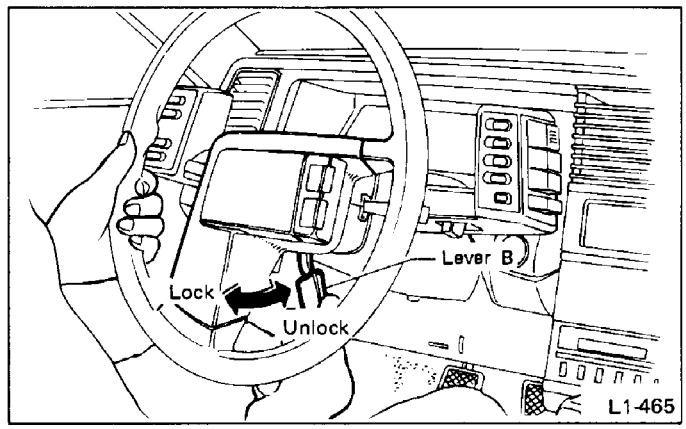

Fig. 54

3. Check the operation of lift-up steering mechanism.
Pull knob on instrument panel to check if steering wheel lifts up automatically. Push steering wheel down to check if it locks in the original position. Ensure there is no free play in the steering wheel.

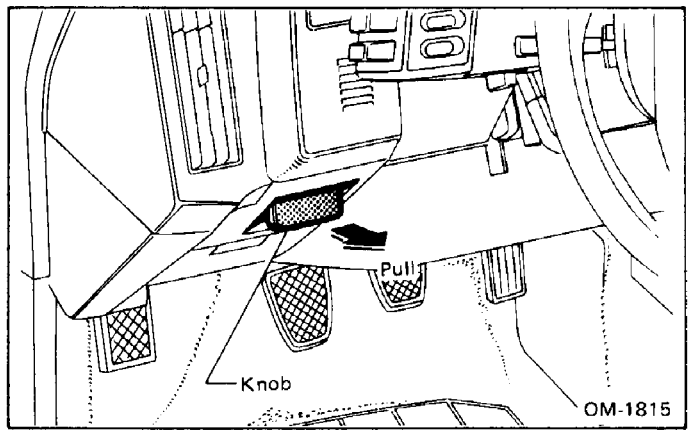

Fig. 55

22. TILT/TELESCOPIC STEERING COLUMN

CHECK POINTS

1. Operation of tilt steering mechanism
2. Operation of telescopic steering mechanism
3. Operation of lift-up steering mechanism

1. Check the operation of tilt steering mechanism.
Unlock lever A and ensure steering wheel moves up and down smoothly for proper position adjustment.
Lock lever A to ensure steering wheel stays in place even when an external force is applied to it from above or below.

Road Test Inspection

1. OPERATION OF INDICATOR LIGHTS AND GAUGES

CHECK POINTS

1. Operation of indicator lights
2. Operation of gauges
3. Connecting the wiring harness connector for clock, etc. [1-pole white connector underneath the glove box]

1. Check the operation of indicator lights.

1) With the ignition switch turned to ON, make sure the charge indicator light, oil pressure indicator light, brake fluid level warning light, stop light failure warning light etc. illuminate. Start the engine, and make sure all of these lights go off.

The parking brake warning light should illuminate when the parking brake lever is pulled and the ignition switch is in the ON position.

It should go out when the parking brake lever is released.

2) Make sure that each indicator light operates normally and corresponds to its respective device.

- Headlight beam indicator light
- Hazard warning indicator light
- Door ajar warning lights
- Rear gate ajar warning light
- Four-wheel drive indicator light
- Rear window defogger indicator light
- Low fuel indicator light
- Door lock indicator light
- Upshift indicator light
- Height control "HI" indicator light
- AT oil temperature warning light
- CHECK ENGINE light, etc.
- Power steering failure warning light

2. Check the operation of gauges.

Start the engine, and make sure that each gauge operates normally.

- Fuel gauge
- Temperature gauge
- Voltmeter
- Oil pressure gauge, etc.

a. Perform this inspection with the gear shift lever in the neutral position.
(For automatic transmission models: Set the select lever in the "P" position.)
b. Set the parking brake.
c. Do not race the engine excessively.

- Analog meter

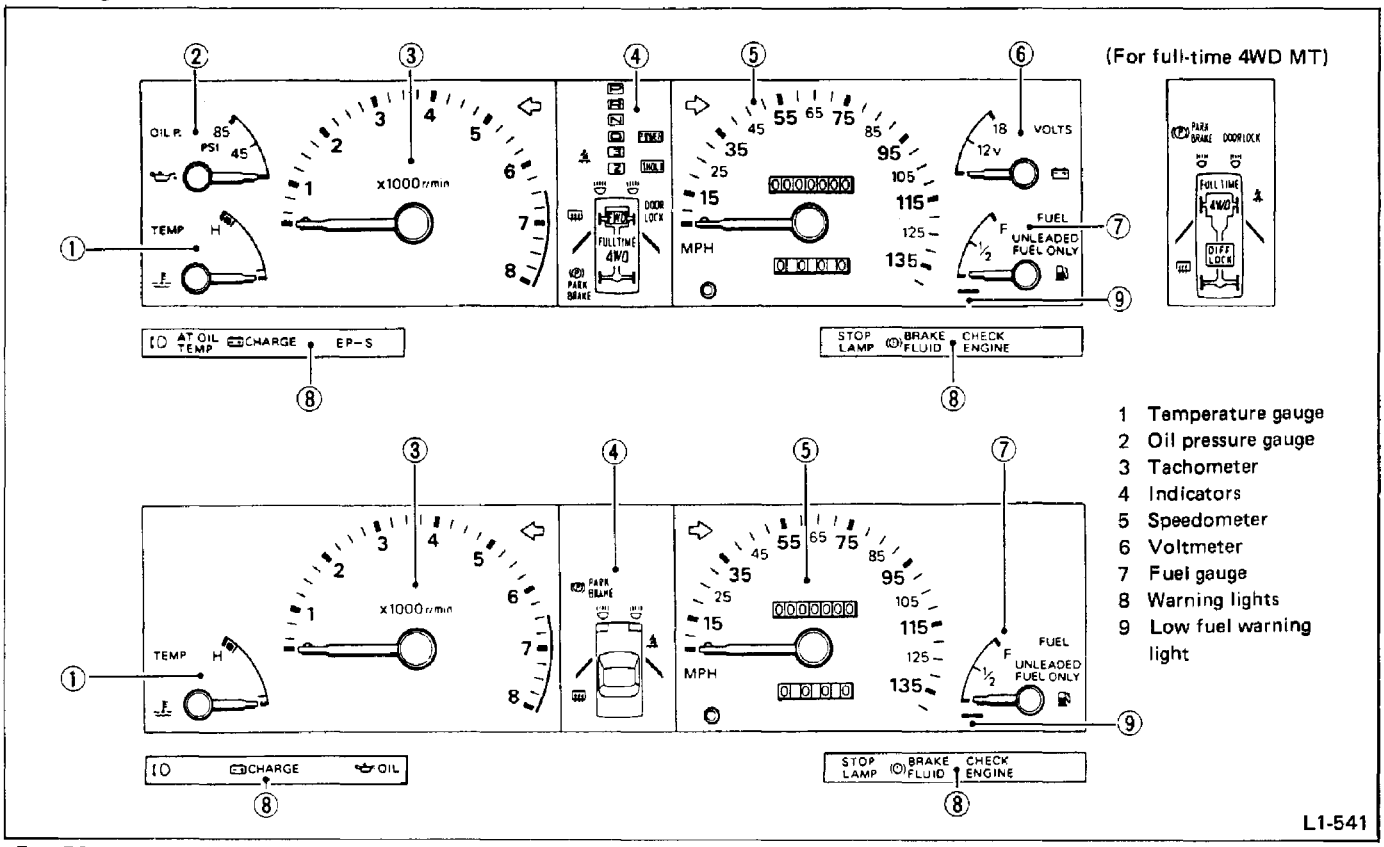

Fig. 56

2. TACHOMETER, RADIO, CLOCK, ETC.

CHECK POINTS

1. Operation of tachometer, radio, digital clock, cigarette lighter, etc.

- Tachometer

Race the engine two or three times, and check the tachometer's operation.

Do not race the engine more than necessary.

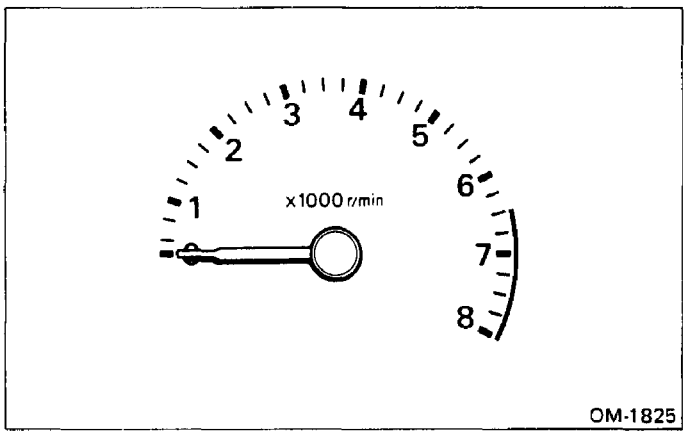

Fig. 57

- Radio

Check the operation according to "Owner's manual".

- Digital clock

Connect the wiring connector for the clock which is located at the back side of the fuse box.

Make sure the clock is operating normally.

- Cigarette lighter

To operate, push in the knob completely and wait for a moment. The lighter will click out of holder automatically when ready to use.

CAUTION:

a. To avoid the possibility of being burned, do not hold the cigarette lighter in by hand. This may also cause damage to the lighter heating element.

b. When replacing the knob, it is recommended that you use only a genuine part. If you use either non-genuine parts or any combination of parts different from original knob-and-socket combination, it may cause overheating due to a short circuit.

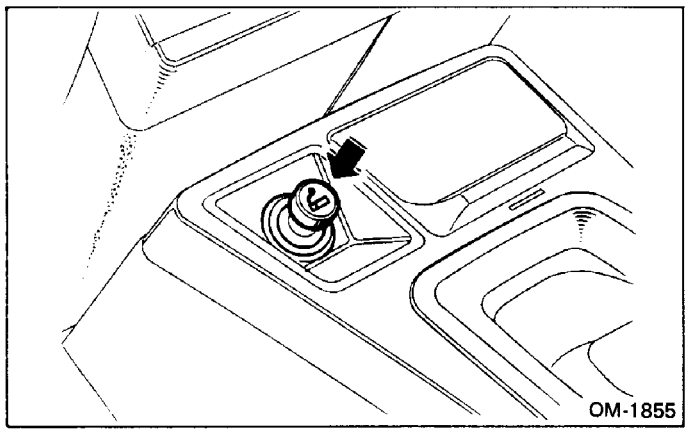

Fig. 58

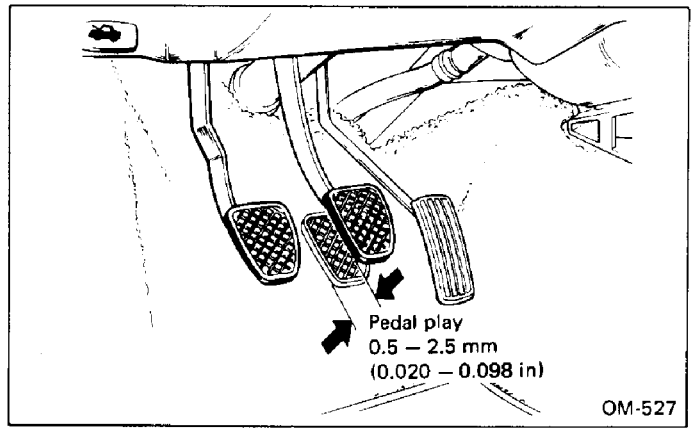

Fig. 59

3. DRIVING TEST

CHECK POINTS

1. **Operation of foot brake and parking brake**
2. **Operation of hill holder**
3. **Operation of clutch and gear shift**
4. **Operation of selector lever (Automatic transmission models only)**
5. **Operation of 4WD selector lever (4WD models only)**
6. **Operation of steering and position of steering wheel**
7. **Operation of turn signal cancel cam**
8. **Operation of ventilation system and heater**
9. **Abnormal noises or vibration**
10. **Operation of cruise control**
11. **Function of automatic vehicle height control ..... Air (pneumatic) suspension vehicle**

1. Check the foot and parking brakes' operation.

1) Drive on a dry, level, paved road, and apply normal braking. Look for uneven or improper operation, or pulling to one side.

Be sure to perform this test in a safe area.

2) Press the brake pedal in two or three times, and keep it fully depressed. Make sure that the brake can be kept that way for at least five seconds. Also check for air in the brake system, or brake fluid leakage.

Brake pedal free play:
0.5 – 2.5 mm (0.020 – 0.098 in)

3) Perform the adjustment of operating rod ASSY as follows:

(1) Be sure engine is off. (No vacuum is applied to brake booster.)

(2) There should be play between brake booster clevis and pin at brake pedal installing portion.
(Depress brake pedal pad with a force of less than 10 N [1 kg, 2 lb] to a stroke of 0.5 to 2.5 mm [0.020 to 0.098 in].)

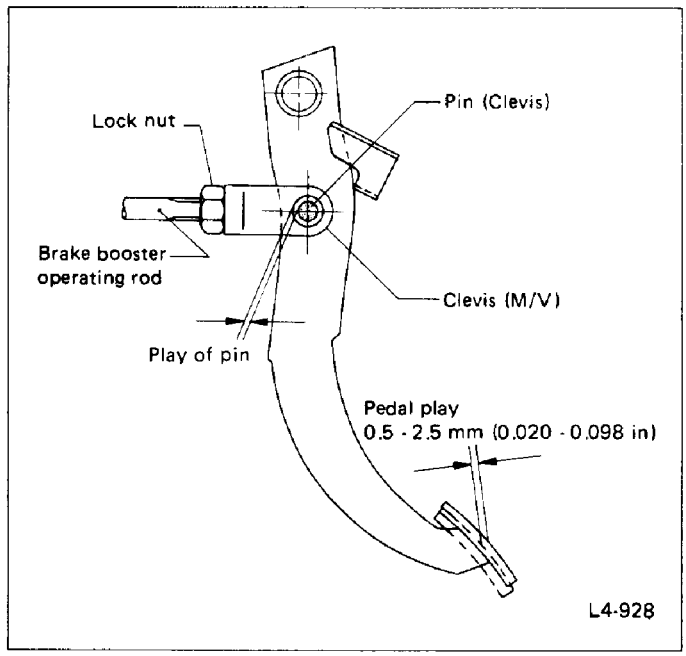

Fig. 60

(3) Depress the surface of brake pad by hand.

(4) If there is no free play between clevis pin and clevis, loosen lock nut for operating rod and adjust operating rod by turning in the direction that shortens it.

(5) After adjustment, make sure there is no brake dragging.

4) Pull the parking brake lever completely out, and check its operation. Also check the ratchet for normal functioning.
Check the parking brake as follows: With the engine running, pull the parking brake lever completely out, and place the gear shift lever in 1st gear. Run the engine slightly faster than idle, and engage the clutch. The engine should stall.
If the parking brake is functioning normally, the engine will stall; if not, the vehicle will continue to roll.

Parking brake lever stroke:
Standard:
3 – 4 notches/245 N (25 kg, 55 lb)

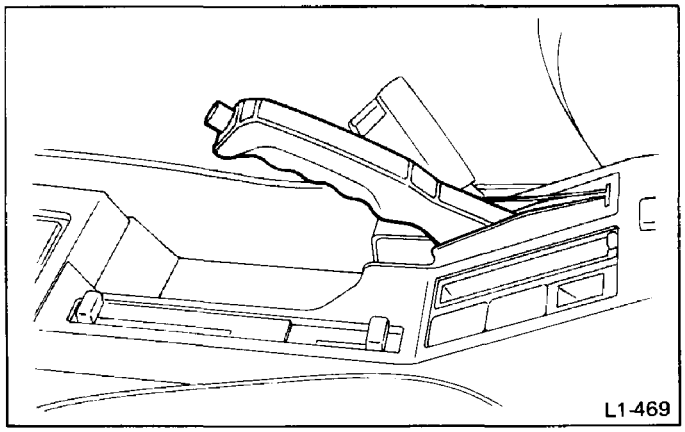

Fig. 61

- If the vehicle does not start properly, it should be corrected by following case A or case B.
  Case A: When the hill holder releases after the clutch pedal is engaged (the engine tends to stall), loosen the adjusting nut gradually until smooth starting is possible.
  Case B: When the hill holder releases before the clutch pedal engages (the vehicle slips down slightly), tighten the adjusting nut so that the hill holder releases after the clutch pedal engages (case A).
  Then make adjustment as in case A.

Whenever turning the adjusting nut, prevent the pressure holding valve cable from revolving as shown in the figure.

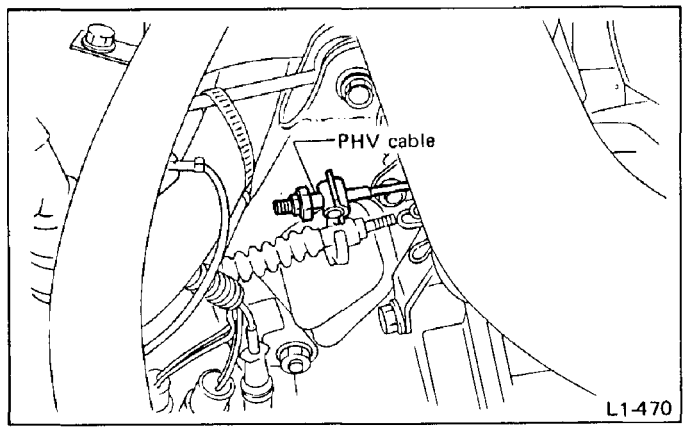

Fig. 62

2. Check the hill holder operation.
1) Inspect free play of clutch pedal by depressing the pedal by hand. If it is out of the specified value, adjust it by turning adjusting nut on engine side end of clutch cable at release fork.

Standard of free play:
At clutch pedal
10 – 20 mm (0.39 – 0.79 in)
At center of cable on clutch release fork
2 – 4 mm (0.08 – 0.16 in)

Tightening torque (Adjusting nut):
5.4 – 9.3 N·m (0.55 – 0.95 kg-m, 4.0 – 6.9 ft-lb)

2) Confirm stopping and starting performances by activating hill holder on an uphill road of 3° or higher inclination.

- If the vehicle does not stop, tighten adjusting nut of pressure holding valve (PHV) cable.

3. Check the operation of clutch and gear shifting.
1) With the engine idling and the shift lever in neutral, gradually depress the clutch pedal, to see if it generates any abnormal noise.

Carefully compare a normal clutch's operating sounds to the clutch being tested.

2) Pull the parking brake lever completely out, and place wheel chocks under the tires. Then depress the clutch pedal completely, and place the shift lever in 4th speed.
Raise engine rpms a little, gradually engage the clutch, and see if the engine stalls.
If the engine stalls, it means that the clutch is not slipping.

a. Be sure to perform this test in a safe area.
b. Do not repeat this test.

Clutch pedal free play:
10 – 20 mm (0.39 – 0.79 in)

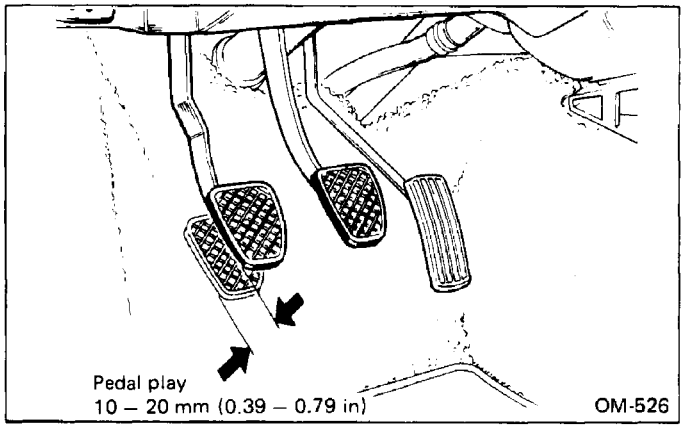

Fig. 63

3) Remove the wheel chocks, and return the shift lever to neutral, then check the gear shifting mechanism for excessive play.

4) Drive the car at various speeds. While depressing the clutch pedal completely, move the gear shift lever into each position, and check for any unusual play or unusual resistance.

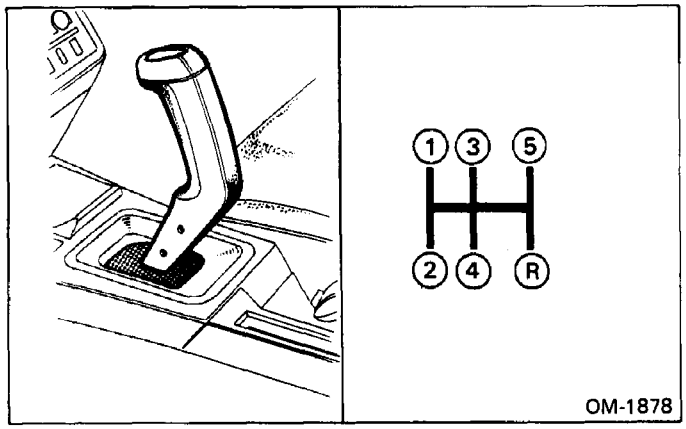

Fig. 64

4. Operation of drive selector lever (Automatic transmission models only).

Place the selector lever in each position, and make sure that the pointer indicates the position of each range correctly.

The 1st hold switch operates when it is pushed while the selector lever is at the 2nd range.

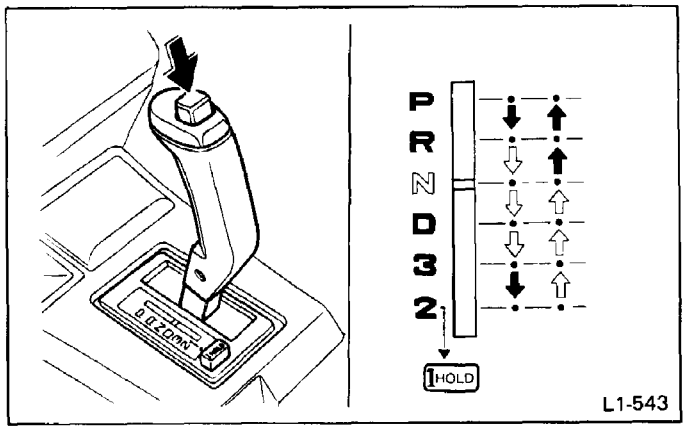

Fig. 65

a. Perform this check by depressing the clutch completely while the vehicle is moving straight ahead.

b. Do not shift the drive selector lever when the wheels are spinning or slipping.

5. Operation of steering and position of steering wheel.

1) Check the steering wheel for free play.

Steering wheel free play:
0 – 25 mm (0 – 0.98 in)

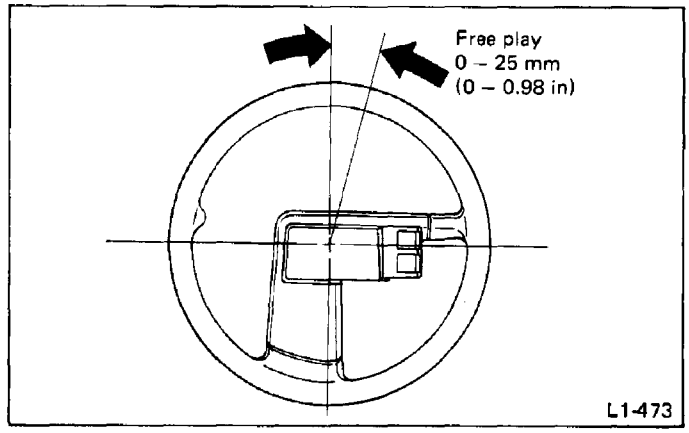

Fig. 66

2) With the car moving straight ahead, check for hard steering, shimmy, or other abnormalities.

3) Make a turn, and check for hard or heavy steering wheel operation, or poor stability.

4) Make a right or left turn with the turn signal on, and make sure that the turn signal switch returns automatically to the OFF position when the steering wheel is returned to the straight ahead position.

6. Operation of ventilation system and heater.

1) While driving, move the control lever into each position, and check the ventilation system's operation. Also check for unusual vibration or noises.

2) Turn the temperature control dial and fan motor switch, and make sure that warm air is discharged into the compartment.

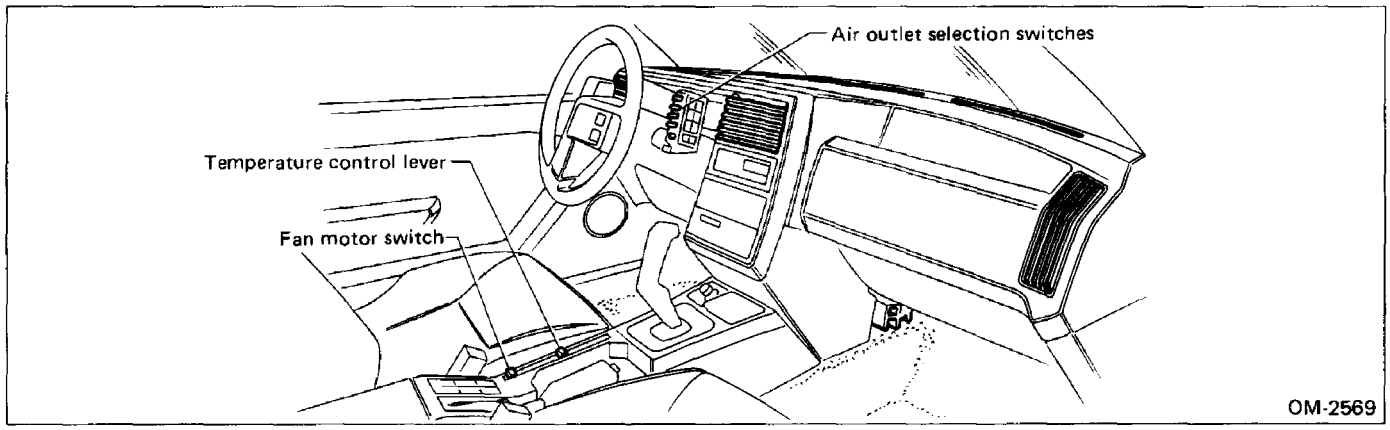

Fig. 67

7. Abnormal noises or vibration.
1) When starting the engine, and while driving the vehicle, check the engine, transmission, body, suspension, and steering system for any unusual noises or vibration.
Do this when idling the engine, accelerating, decelerating, and running at low, middle and high speeds.
2) Depress the accelerator pedal, and make sure that the engine rpms increase smoothly and that the vehicle accelerates smoothly.
3) While driving, turn the steering wheel right and left to test the vehicle's stability and response.

Be sure to perform this test in a safe area.

8. Check the operation of the cruise control according to "Owner's manual".
9. Check the function of automatic vehicle height resumption.

(1) Move height control switch to "HIGH" while operating car below 80 km/h (50 MPH) to see if HIGH pilot lamp comes on.
(2) Operate car at speed higher than 95 km/h (60 MPH) for at least five seconds to check if NORMAL pilot lamp instead of HIGH pilot lamp comes on.
(3) Operate car at speed lower than 55 km/h (35 MPH) for at least five seconds to check if HIGH pilot lamp instead of "NORMAL" pilot lamp comes on again.
(4) Stop car and move height control switch to "NORMAL." Check if car is set to the NORMAL height position.
(5) If abnormality is noted in steps (1) through (4) above, refer to Chapter 4-1 and repair as necessary.

Be sure to conduct driving tests using a chassis dynamometer with front wheels set in operation (FF drive), or test on an authorized race course or similar place.

Post-road Test Inspection

1. AUTOMATIC TRANSMISSION FLUID (ATF) LEVEL

CHECK POINTS
• **Level of ATF**

The ATF should be maintained at the proper level as follows:
1) Drive the car several miles to bring the transmission to the normal operating temperature. 60 to 80°C (140 to 176°F) is normal.
2) Park the car on a level surface.
3) Place selector lever in the "P" position and idle the engine.
4) Remove the level gauge and wipe it clean.
5) Reinsert the level gauge completely.
6) Remove it again and note its reading.
If the fluid level is at the lower mark or below, add enough recommended automatic transmission fluid to bring the level to the high mark. ATF is added through the fluid level gauge hole.

Do not fill above the high mark level.

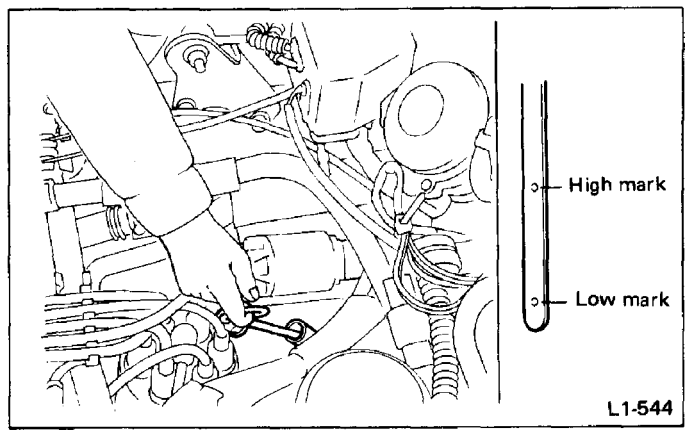

Fig. 68

2. POWER STEERING FLUID LEVEL

CHECK POINTS
• Level of power steering fluid

The power steering fluid should be maintained at a proper level.
Check level as follows:
1) Drive the car several miles or kilometers to bring power steering system up to the normal operating temperature of about 60°C (140°F).
2) Park the car on a level surface and stop the engine.
3) Remove the level gauge and wipe it clean.
4) Reinstall the level gauge firmly.
5) Remove it again and read the level on the "HOT" side. If the fluid level is at the lower level or below it, add recommended power steering fluid up to the high level.

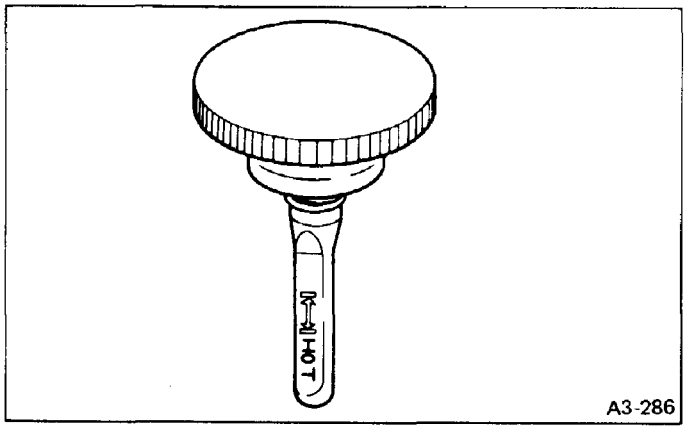

Fig. 69

When the fluid level is to be checked without warming up the power steering system [at approximately 21°C (70°F)], read the fluid level at the "COLD" position of the level gauge.

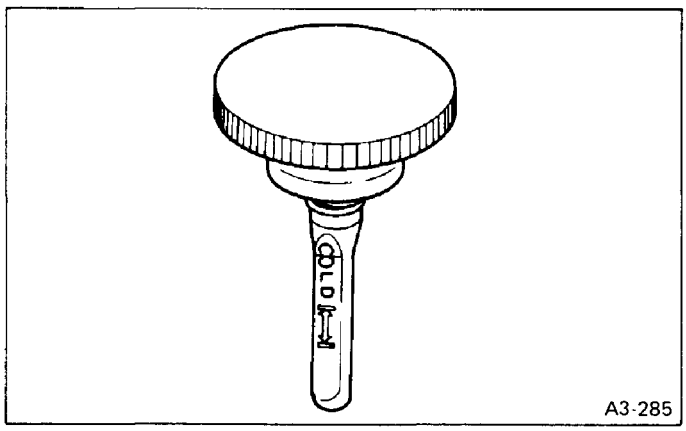

Fig. 70

a. The available power steering fluid is the same as the automatic transmission fluid. (Except XT6)
The available CYBRID POWER steering fluid is "SPECIAL POWER STEERING FLUID". (XT6)
Be sure to use the recommended fluid.
b. When power steering fluid is added, be careful not to allow any dust into the tank.

3. TOE

CHECK POINTS
• Toe of front wheels

1) To check the toe, make sure that the vehicle has a full fuel tank and that the spare tire, floor mats and service tool are in place. No other weight should be present.
2) Place the vehicle on a flat, level surface, and set the front wheels in the straight ahead position.
3) Mark a line at the center of the tread surface on each tire, and then mark the front and rear end positions of both front tires on the ground. Measure the distance between the right and left tires at both the front and rear ends, and then check the toe by using the following equation:

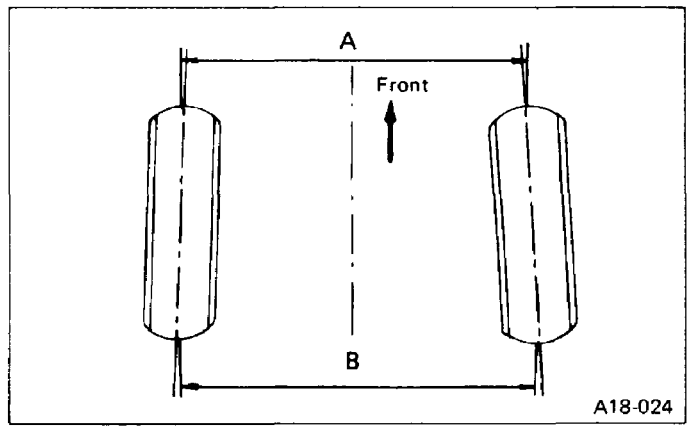

Fig. 71

Toe L = B-A (In case of "L" being positive: L = toe-in / In case of "L" being negative: L = toe-out)

			FWD			4WD		
			Normal	Minimum	Maximum	Normal	Minimum	Maximum
Toe	Service limit	mm (in)	0 (0)	3 (0.12) IN	3 (0.12) OUT	5 (0.20) OUT	2 (0.08) OUT	8 (0.31) OUT
		Degree: per wheel	0°	0°09' IN	0°09' OUT	0°15' OUT	0°06' OUT	0°24' OUT
	*Service standard	mm (in)	0 (0)	1 (0.04) IN	1 (0.04) OUT	5 (0.20) OUT	4 (0.16) OUT	6 (0.24) OUT
		Degree: per wheel	0°	0°03' IN	0°03' OUT	0°15' OUT	0°12' OUT	0°18' OUT
Side-slip with one occupant	Service limit	m/km (ft/mile)	IN 5 – OUT 5 (IN 26 – OUT 26)					
	*Service standard	m/km (ft/mile)	IN 3 – OUT 3 (IN 16 – OUT 16)					

* If the toe data is out of "SERVICE LIMIT", readjust it within "SERVICE STANDARD".

a. Before checking front wheel alignment with a sideslip tester, check the following:

(1) Left and right tires are the same type and size.

(2) Tires are inflated to specified pressure.

b. When driving over the sideslip tester, be sure to drive the vehicle slowly with the steering wheel fixed in the straight ahead position.

4) If the measured toe or sideslip value is not within the standard range, adjust it as follows:

(1) Loosen the lock nut on the right and left tie-rod ends, and adjust the right and left tie-rods simultaneously.

Turn both tie-rods equally to make the adjustment.

(2) Measure the amount of toe or sideslip, and if the measured value is within the specified range, tighten the tie-rod end lock nuts.

Tightening torque (lock nut):
78 – 88 N·m (8.0 – 9.0 kg-m, 58 – 65 ft-lb)

After completing the toe adjustment, check the steering wheel for levelness when the vehicle is in the straight ahead position.

4. UNDERSIDE

CHECK POINTS

1. **Leakage of engine oil, transmission gear oil, differential gear oil, etc.**
2. **Leakage of coolant**
3. **Leakage of brake fluid**
4. **Loose suspension mountings or steering mounting**

Raise the vehicle body and perform these checks from the underside by referring to the "Preparatory Steps for Underside Inspection" instructions.

1. Visually check for any signs of engine oil, transmission gear oil, differential gear oil, etc. leakage.
2. Visually check for any sign of coolant leakage.
3. Visually check for any sign of brake fluid leakage.
4. Check the suspension mounting and steering mounting for any loose or unconnected parts.

5. WATER LEAKAGE

CHECK POINTS
• Water leakage by pouring water

1) Before performing the water leakage test, remove anything that may obstruct the operation or which must be kept dry.
2) Close all of the windows completely, and then close all of the doors tightly. Close the hood and trunk lid before starting the test.
3) Connect a hose to a tap, and spray water on the vehicle. The rate of water discharge must be approx. 20 to 25 liters (5.3 to 6.6 US gal, 4.4 to 5.5 Imp gal) per minute. When spraying water on areas adjacent to the floor and wheel house, increase the pressure.
When directing water on areas other than the floor portion and wheel house, decrease the pressure. But the force of water must be made strong occasionally by pressing the end of the hose.

Be sure to keep the hose at least 10 cm (3.9 in) from the vehicle.

4) Check the following areas:
   (1) Front window and body framework mating portion
   (2) Door mating portions
   (3) Glass mating portions
   (4) Rear quarter windows mating portions
   (5) Rear window and body framework mating portion
   (6) Trunk lik mating portion
   (7) Around roof drips

If any dampness in the compartments is discovered after the water has been applied, check all areas that may have possibly contributed to the leak carefully.

6. EXTERNAL APPEARANCE AND EQUIPMENT

CHECK POINTS
1. Paint 2. Scratches or damage to glass 3. Rust formation 4. Contamination of interior parts 5. Installation of equipment

1. Check the paint after removing the paint protective agent and washing the vehicle.

Before removing the protective agent, be sure to wash the vehicle, because the painted surface may be scratched if the surface is rubbed with sand or other hard particles which may be attached to the protective agent.

- Check the whole vehicle body for stains, flaking, damage caused by transportation, rust, dirt, cracks, or blistering.

a. It is better to determine an inspection pattern in order to avoid missing an area.
b. It is desirable not to make corrections to the body paint unless absolutely needed. However, if any corrections are required to remove scratches or rust, the area to be corrected must be limited as much as possible. Re-painting and spray painting must be avoided whenever possible.

2. Carefully check each window glass for scratches. Slight damage may be removed by polishing with cerium oxide. (Half-fill a cup with cerium oxide, and add warm water to it. Then agitate the contents until it turns to wax. Apply this wax to a soft cloth, and polish the glass.)
3. Check each portion of the vehicle body and underside components for the formation of rust. If rust is discovered, remove it with #80 – #180 emery paper, and treat the surface with rust preventive. After this treatment is completed, flush the portion thoroughly, and prepare the surface for repair painting.

Care should be taken not to apply paint, undercoating agent, anti-corrosive wax, etc. to the following parts of air-suspension equipped models while refinishing the undercarriage.
(1) Diaphragm and rolling surfaces
(2) Air suspension compressor and dryer ASSY

- Check each portion of the body and all of the chrome parts for deformation or distortion. Also check each lamp lens for cracks.

4. Check the following interior parts for contamination.
1) Instrument panel and meter glass
2) Glove box
3) Sun visor
4) Room mirror
5) Assist rail
6) Roof trim
7) Door trim
8) Inner trim
9) Front and rear seats
10) Luggage shelf
11) Floor mat
12) Others

If the meter glass is contaminated, wipe it gently with a clean soft cloth that has been dampened with water. Do not rub the meter glass hard; otherwise, the transparent resin plate on it may become cloudly due to the formation of scratches.

5. Check the interior and exterior equipment to make sure that they are installed securely. Also make sure that the equipment conforms to the vehicle's specifications.

Make sure that the spare tire, jack, spare key, tools, owner's manual, warranty & service booklet, etc. are all present.

PERIODIC MAINTENANCE SERVICES 1-5

SUBARU

1988

Page

SCHEDULE OF INSPECTION AND MAINTENANCE SERVICES 2

1. DRIVE BELT(S) [EXCEPT CAMSHAFT] (INSPECT DRIVE BELT TENSION) 3
2. CAMSHAFT DRIVE BELT 6
3. ENGINE OIL 9
4. ENGINE OIL FILTER 11
5. REPLACE ENGINE COOLANT AND INSPECT COOLING SYSTEM, HOSES AND CONNECTIONS 12
6. REPLACE FUEL FILTER AND INSPECT FUEL SYSTEM HOSES AND CONNECTIONS 15
7. AIR FILTER ELEMENTS (AIR CLEANER, PCV AIR FILTER) ... 16
8. SPARK PLUG 17
9. TRANSMISSION/DIFFERENTIAL (FRONT AND REAR) LUBRICANTS (GEAR OIL) 18
10. AUTOMATIC TRANSMISSION FLUID 19
11. BRAKE FLUID 20
12. DISC BRAKE PAD AND DISC/FRONT AND REAR AXLE BOOTS 22
13. BRAKE LINING AND DRUM 24
14. INSPECT BRAKE LINE AND CHECK OPERATION OF PARKING AND SERVICE BRAKE SYSTEM 25
15. CLUTCH AND HILL-HOLDER SYSTEM 28
16. STEERING AND SUSPENSION 30
17. GREASE ON FRONT AND REAR WHEEL BEARINGS 38

Schedule of Inspection and Maintenance Services

Continue periodic maintenance beyond 96,000 km (60,000 miles) or 60 months by returning to the first column of the maintenance schedule.

Symbols used
R : Replace
I : Inspect, adjust, correct or replace if necessary
P : Perform
(I) or (P) : Recommended service for safe vehicle operation

	MAINTENANCE ITEM	MAINTENANCE INTERVAL [Number of months or km (miles), whichever occurs first.]									REMARKS
		Months	7.5	15	22.5	30	37.5	45	52.5	60	
		x 1,000 km	12	24	36	48	60	72	84	96	
		x 1,000 miles	7.5	15	22.5	30	37.5	45	52.5	60	
1	Drive belt(s) [Except camshaft] (Inspect drive belt tension)					I				R	
2	Camshaft drive belt									R	
3	Engine oil		R	R	R	R	R	R	R	R	See NOTE a).
4	Engine oil filter		R	R		R		R		R	See NOTE b).
5	Replace engine coolant and inspect cooling system, hoses and connections					(P)				P	
6	Replace fuel filter and inspect fuel system hoses and connections					(P)				P	See NOTE c).
7	Air filter elements (Air cleaner, PCV air filter)					R				R	
8	Spark plug					R				R	
9	Transmission/Differential (Front and Rear) lubricants (Gear oil)					I					See NOTE d).
10	Automatic transmission fluid	FWD vehicle				I					
		4WD vehicle				R				R	See NOTE e).
11	Brake fluid					R				R	See NOTE f).
12	Disc brake pad and disc/Front and rear axle boots			I		I		I		I	See NOTE g).
13	Brake lining and drum					I				I	See NOTE g).
14	Inspect brake line and check operation of parking and service brake system			P		P		P		P	
15	Clutch and hill-holder system			I		I		I		I	Adjust pedal free play at 1,600 km (1,000 miles).
16	Steering and suspension			I		I		I		I	See NOTE g).
17	Grease on front and rear wheel bearings									(I)	

a. When the vehicle is used under severe driving conditions mentioned below*, the engine oil should be changed more often.

b. Change at first 12,000 km (7,500 miles) or 7.5 months, whichever occurs first. Afterwards, follow the table, i.e. change every 24,000 km (15,000 miles) or 15 months, whichever occurs first.

c. When the vehicle is used in extremely cold or hot weather areas, contamination of the filter may occur and replacement of filter should be performed as necessary.

d. When the vehicle is frequently operated under severe conditions, replacement should be performed every 48,000 km (30,000 miles).

e. When the vehicle is frequently operated under severe conditions, replacement should be performed every 24,000 km (15,000 miles).

f. When the vehicle is used under following areas, change fluid every 24,000 km (15,000 miles) or 15 months, whichever occurs first.

- **(1) High humid areas**
- **(2) Mountainous areas**

g. When the vehicle is used under severe driving conditions mentioned below*, inspection should be performed every 12,000 km (7,500 miles) or 7.5 months, whichever occurs first.

*** Severe driving conditions:**

- **(1) Repeated short distance driving (Item 3, 12 and 13 only)**
- **(2) Driving on rough and/or muddy roads (Item 12, 13 and 16 only)**
- **(3) Driving in dusty conditions**
- **(4) Driving in extremely cold weather (Item 3 and 16 only)**
- **(5) Driving in areas where roads salts or other corrosive materials are used. (Item 12, 13 and 16 only)**

1 Drive Belt(s) [Except Camshaft] (Inspect drive belt tension)

MAINTENANCE INTERVAL [Number of months or km (miles), whichever occurs first]								
Months	7.5	15	22.5	30	37.5	45	52.5	60
x 1,000 km	12	24	36	48	60	72	84	96
x 1,000 miles	7.5	15	22.5	30	37.5	45	52.5	60
				I				R

INSPECTION

1) Replace belts, if cracks, fraying or wear is found.

2) Check drive belt tension and adjust it if necessary by changing alternator installing position and/or idler pulley installing position.

1. 1800 cc model

Type	Pulley arrangement	Tension mm (in)/98 N (10 kg, 22 lb)	
		New belt	Existing belt
Basic model	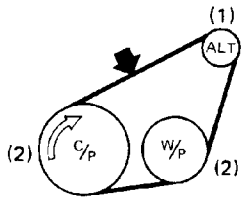	8 – 10 (0.31 – 0.39)	9 – 11 (0.35 – 0.43)
Power steering equipped model	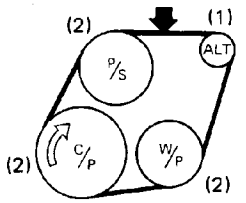	6 – 7 *1 (0.24 – 0.28)	7 – 9 (0.28 – 0.35)
Air conditioner equipped model	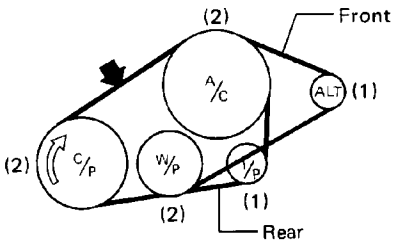	10 – 12 *2 (0.39 – 0.47)	
Power steering and air conditioner equipped model	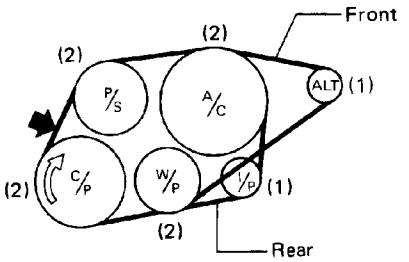	6 – 8 *2 (0.24 – 0.31)	

Figures in parentheses refer to the number of grooves in pulleys.

C/P : Crankshaft pulley
W/P : Water pump pulley
ALT : Alternator pulley
P/S : Power steering oil pump pulley
A/C : Air conditioner compressor pulley
I/P : Idler pulley

Fig. 1

***1 Replace two belts simultaneously if the above fault is found on one of the two belts.**

***2 When replacing belt with a new one, adjust its tension to the specification and then readjust it to the same specification after running engine for 5 minutes in consideration of its initial expansion.**

L1-477

2. 2700 cc model

Type	Pulley arrangement	Tension mm (in)/98 N (10 kg, 22 lb)	
		New belt	Existing belt
Basic model	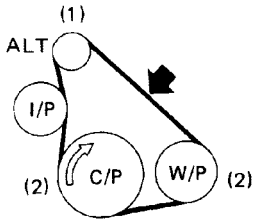	8 – 10 (0.31 – 0.39)	9 – 11 (0.35 – 0.43)
Air conditioner equipped model	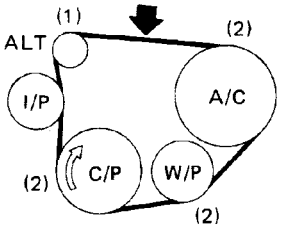	5.5 – 6.5*2 (0.217 – 0.256)	6.5 – 7.5 (0.256 – 0.295)

Figures in parentheses refer to the number of grooves in pulleys.
C/P : Crankshaft pulley
W/P : Water pump pulley
ALT : Alternator pulley
A/C : Air conditioner compressor pulley
I/P : Idler pulley

***1 Replace two belts simultaneously if the above fault is found on one of the two belts.**
***2 When replacing belt with a new one, adjust its tension to the specification and then readjust it to the same specification after running engine for 5 minutes in consideration of its initial expansion.**

Fig. 2 L1-551

REPLACEMENT

(1) Except XT6

[A] Alternator drive belt(s)

1) Loosen alternator mounting bolts and remove belt(s).

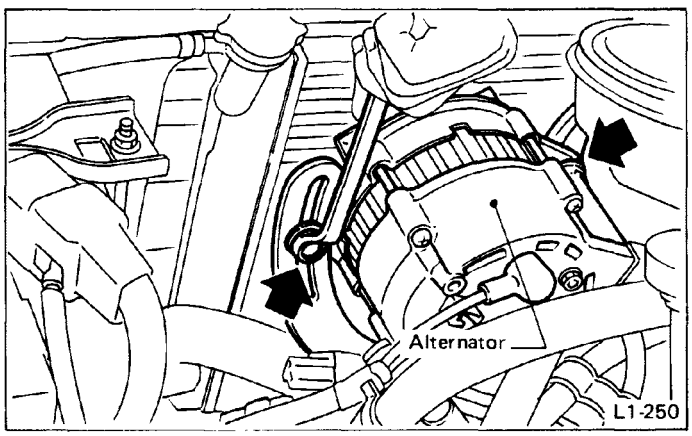

Fig. 3

2) Install new belt(s) and tighten alternator installing bolts as to obtain the specified belt tension shown in the above table.
3) Wipe off any oil or water on belts and pulleys.

[B] Rear side belt (not driving alternator) on vehicles equipped with air conditioner.

1) Loosen bolt and special nut, securing idler pulley then remove belt.

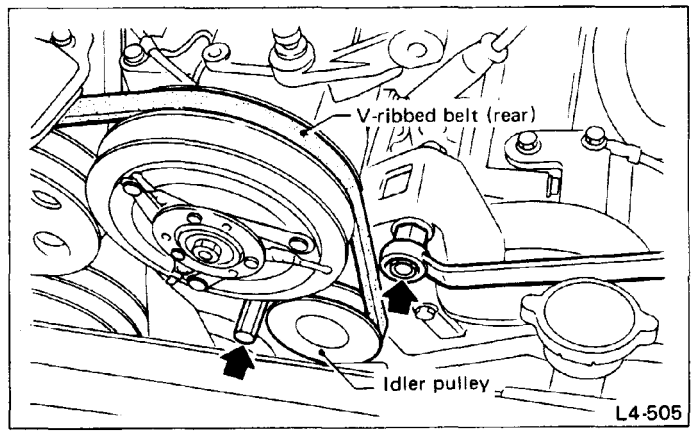

Fig. 4

2) Attach new belt and apply proper tension to belt as shown above.

(2) XT6

1) Loosen lock nut. Using adjusting bolt, move idler pulley in the direction that loosens belt.
2) Replace belt with a new one.
3) Adjust belt adjusting bolt to tense belt properly. Then tighten lock nut.

Tightening torque:
34 – 44 N·m (3.5 – 4.5 kg-m, 25 – 33 ft-lb)

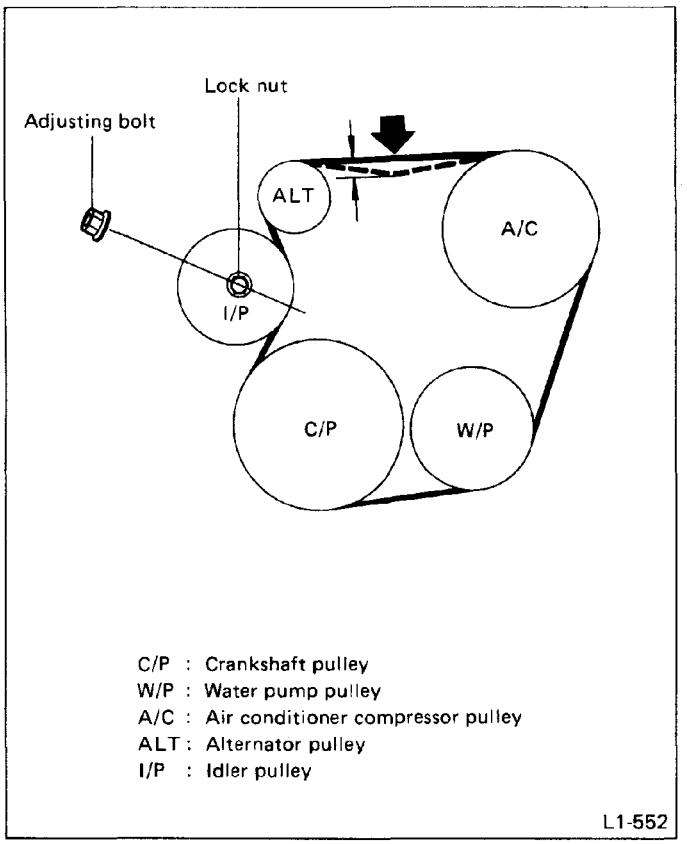

Fig. 5

4) Tighten adjusting bolt by turning it counterclockwise.

Tightening torque:
4 – 6 N·m (0.4 – 0.6 kg-m, 2.9 – 4.3 ft-lb)

	Belt tension	
	Gauge	Belt tension [with 98 N (10 kg, 22 lb) force]
New	637 – 736 N (65 – 75 kg, 143 – 165 lb)	5.5 – 6.5 mm (0.217 – 0.256 in)
Used	441 – 637 N (45 – 65 kg, 99 – 143 lb)	6.5 – 7.5 mm (0.256 – 0.295 in)

* Tighten a new belt in two steps. Tighten first by applying a force of 588 to 785 N (60 to 80 kg, 132 to 176 lb). Then retighten to specified value after idling engine for 5 minutes.

2 Camshaft Drive Belt

MAINTENANCE INTERVAL [Number of months or km (miles), whichever occurs first]								
Months	7.5	15	22.5	30	37.5	45	52.5	60
x 1,000 km	12	24	36	48	60	72	84	96
x 1,000 miles	7.5	15	22.5	30	37.5	45	52.5	60
								R

REPLACEMENT

a. Before replacing timing belts, remove radiator fan.
b. Timing belts should be replaced when engine is cold.
c. Be extremely careful not to allow nuts, washers, and other foreign matters to enter belt cover.

REMOVAL

1) Loosen water pump pulley nut until it can be turned with fingers.
2) Loosen two alternator mounting bolts.
3) Detach V-belts.
4) Disconnect harness for oil pressure switch or oil pressure gauge.
5) Remove crankshaft pulley:
Loosen crank pulley bolt, and remove pulley. Use special tool "FLYWHEEL STOPPER CP" or "DRIVE PLATE STOPPER" to lock crank pulley.

Tool No.	Tool Name
498277000	FLYWHEEL STOPPER
498497000	DRIVE PLATE STOPPER

6) Remove water pump pulley and pulley cover by loosening four 6 mm nuts.
7) Remove level gauge guide together with level gauge by loosening one 8 mm bolt.
8) Remove right-hand and left-hand belt covers by loosening eight 6 mm bolts.
9) Remove front belt cover by loosening eight 6 mm bolts.
10) Remove timing belts:
(1) Loosen bolts securing tensioner on the side of #1 and #3 cylinders, and move tensioner upward completely. Then temporarily tighten bolts.
Use special tool "TENSIONER WRENCH" (499007000) to move up #2 and #4 side tensioner.
(2) Detach timing belt on the side of #1 and #3 cylinders.
(3) Remove crankshaft sprocket CP.
(4) Detach timing belt on the side of #2 and #4 cylinders.

Put arrow mark to indicate the direction in which belts move before detaching belts.

INSTALLATION

Loosen the upper bolts ⓐ and ⓒ by 1/2 turn in advance.

1) Install timing belts:
(1) Align center line of three lines scribed on flywheel with timing mark on flywheel housing by moving flywheel.
(2) Align timing mark scribed on left-hand camshaft sprocket with notch on belt cover.

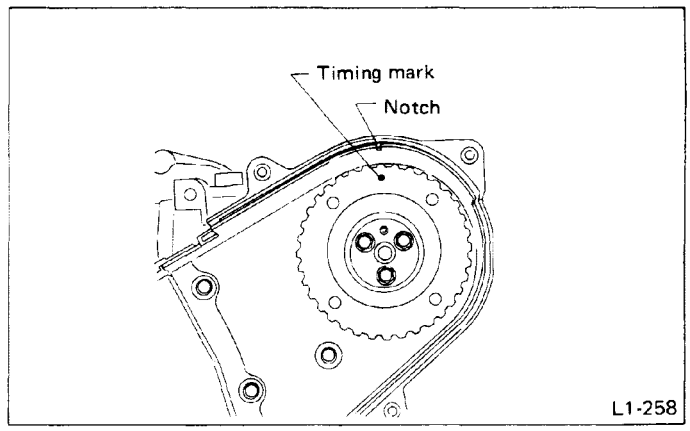

Fig. 6

(3) Attach No. 2 timing belt to crankshaft sprocket, oil pump sprocket, idler CP, and camshaft sprocket in sequence. Be careful not to slacken belt.

(4) Adjust tension of belt by loosening tensioner bolt ⓓ by 1/2 turn.

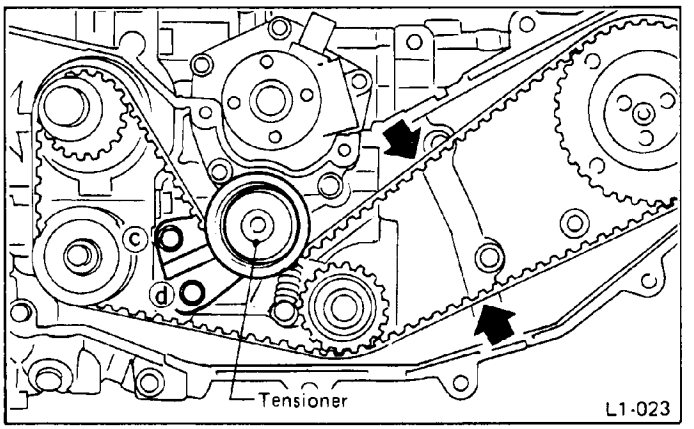

Fig. 7

(5) Push timing belt with finger and ensure tensioner moves smoothly.

(6) Using special tool "BELT TENSION WRENCH CP" (499437000), apply the specified torque counterclockwise to camshaft sprocket. Under this state, temporarily tighten tensioner bolt ⓓ and then temporarily tighten bolt ⓒ.

Specified timing belt tension and torque to be applied to camshaft sprocket

Belt tension	Torque to be applied to camshaft sprocket
147 – 245 N (15 – 25 kg, 33 – 55 lb)	24 – 25 N·m (2.4 – 2.6 kg-m, 17 – 19 ft-lb)

When specified belt tension is applied to timing belt, notch of special tool "BELT TENSION WRENCH CP" will be aligned with belt cover notch. Timing under tensioned state can be ascertained by this method.

(7) Sequentially tighten bolts ⓓ and ⓒ to the specified torque.

Tightening torque:
17.2 – 20.1 N·m
(1.75 – 2.05 kg-m, 12.7 – 14.8 ft-lb)

(8) Be sure the three lines on flywheel and timing mark on camshaft sprocket are respectively positioned as specified in steps (1) and (2) above.

(9) Rotate crankshaft clockwise one turn and align center line of scribed three lines on flywheel with timing mark on flywheel housing.

(10) Install crankshaft sprocket CP.

(11) Align timing mark of right-hand camshaft sprocket with notch on belt cover.

(12) Attach timing belt to crankshaft sprocket and camshaft sprocket. Be careful not to slacken belt.

(13) Loosen tensioner bolt ⓑ 1/2 turn, and apply tension to timing belt.

(14) Push timing belt with finger to ensure smooth movement of tensioner.

(15) Using special tool "BELT TENSION WRENCH CP" (499437000), apply the specified torque counterclockwise to camshaft sprocket. Under this state, temporarily tighten tensioner bolt ⓑ and then temporarily tighten bolt ⓐ.

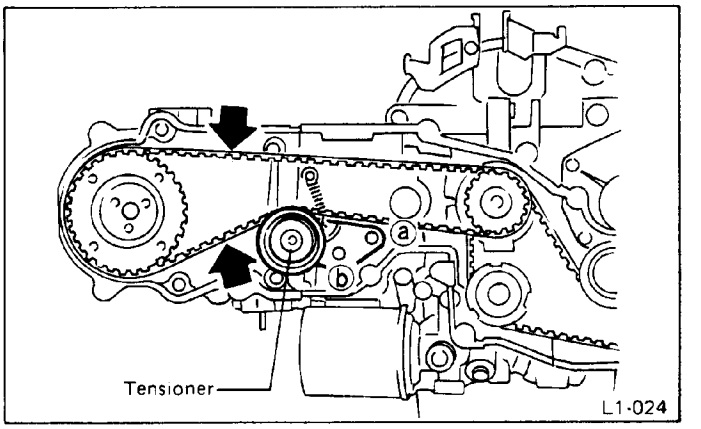

Fig. 8

(16) Sequentially tighten bolts ⓑ and ⓐ to the specified torque.

Tightening torque:
17.2 – 20.1 N·m
(1.75 – 2.05 kg-m, 12.7 – 14.8 ft-lb)

(17) Be sure the three lines on flywheel and timing mark on camshaft sprocket are respectively positioned as specified in steps (11) and (12) above.

2) Install front belt cover:

Attach front and rear belt cover sealings, and timing belt cover plug to front belt cover. Install it to cylinder block.

Be sure that no foreign matter such as nut, washer, etc. is left inside the belt cover.

3) Install crank pulley:
Lock crank pulley using special tool "FLYWHEEL STOPPER CP" or "DRIVE PLATE STOPPER", and tighten crank pulley bolt.

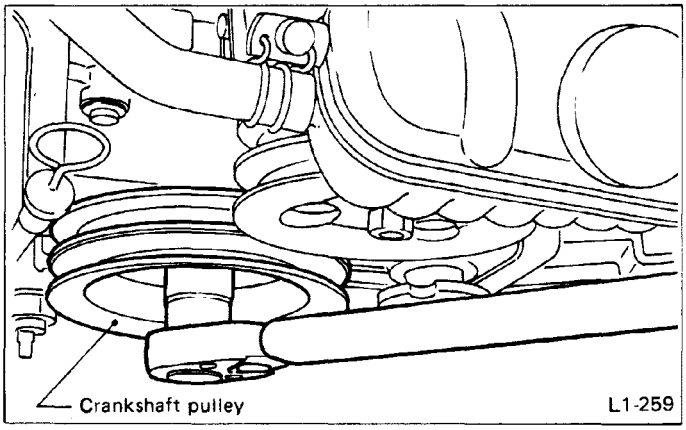

Fig. 9

Tightening torque:
89 – 107 N·m (9.1 – 10.9 kg-m, 66 – 79 ft-lb)

4) Install water pump pulley:
Assemble water pump pulley and pulley cover, and temporarily tighten bolts.
5) Install oil level No. 2 guide ASSY and oil level gauge CP. Coat O-ring with engine oil when installing.
6) Install V-belts.
7) Tighten water pump pulley bolt to the specified torque.

Tightening torque:
9.1 – 10.5 N·m (0.93 – 1.07 kg-m, 6.7 – 7.7 ft-lb)

8) Connect harness to oil pressure switch or oil pressure gauge and clamp harness to level gauge guide.

3 Engine Oil

MAINTENANCE INTERVAL [Number of months or km (miles), whichever occurs first]								
Months	7.5	15	22.5	30	37.5	45	52.5	60
x 1,000 km	12	24	36	48	60	72	84	96
x 1,000 miles	7.5	15	22.5	30	37.5	45	52.5	60
	R	R	R	R	R	R	R	R

REPLACEMENT

1) Drain engine oil by loosening engine oil drain plug.

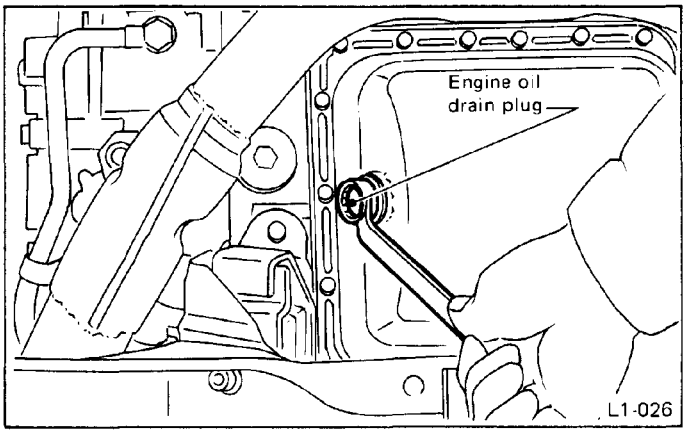

Fig. 10

2) Open engine oil filler cap for quick draining of the engine oil.

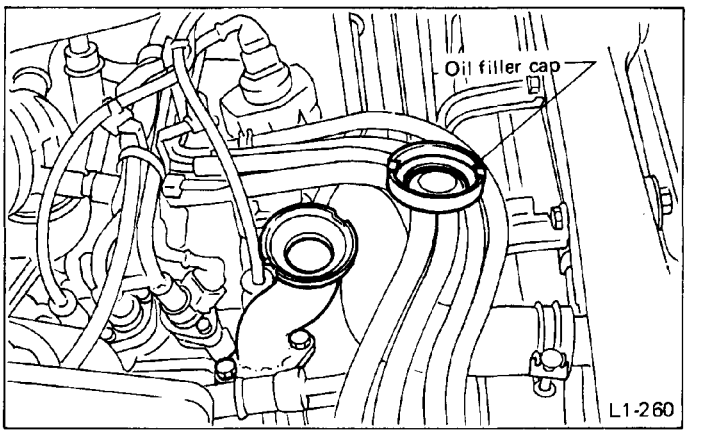

Fig. 11

3) Tighten engine oil drain plug after draining engine oil.

Tightening torque:
25 N·m (2.5 kg-m, 18 ft-lb)

4) Fill engine oil through filler pipe up to upper point on level gauge. Make sure that vehicle is placed level when checking oil level. Use engine oil of proper quality and viscosity, selected in accordance with the table below.

ITEM	API Classification	SAE viscosity No. and Applicable Temperature
		(°F) −30 0 30 60 90
		(°C) −34 −18 0 16 32
• Engine oil	SE, SF	10W-30, 10W-40
		5W-30

L1-445

Fig. 12

The proper viscosity helps car get good cold and hot starting by reducing viscous friction and thus increasing cranking speed.

a. SAE 5W-30 is not recommended for sustained high speed driving.
b. If vehicle is used in desert areas or areas with very high temperatures or for other heavy duty applications, the following viscosity oils may be used:

"30, 40, 10W-50, 20W-40, 20W-50"

c. When replenishing oil, it does not matter if the oil to be added is a different brand from that in the engine, however, use oil having the API classification and SAE viscosity No. designated by SUBARU.

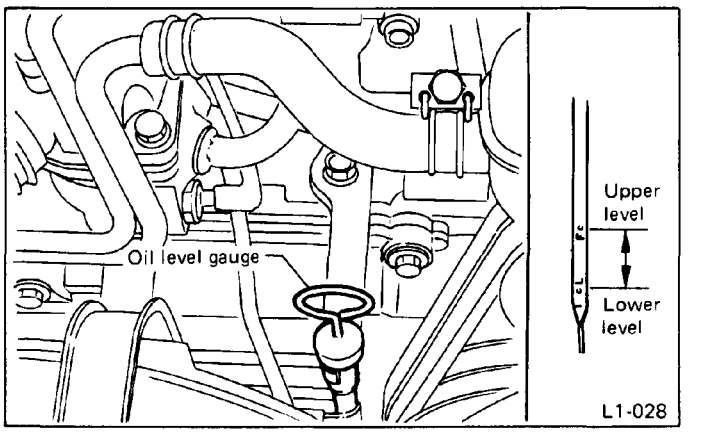

Fig. 13

Engine oil capacity:
Upper level
4.0ℓ (4.2 US qt, 3.5 Imp qt) (Except XT6)
5.0ℓ (5.3 US qt, 4.4 Imp qt) (XT6)
Lower level
3.0ℓ (3.2 US qt, 2.6 Imp qt) (Except XT6)
4.0ℓ (4.2 US qt, 3.5 Imp qt) (XT6)

5) Close engine oil filler cap.
6) Start engine and warm it up for a time.
7) After stopping the engine, recheck the oil level. If necessary, add oil up to the upper point on level gauge.

4 Engine Oil Filter

MAINTENANCE INTERVAL [Number of months or km (miles), whichever occurs first]								
Months	7.5	15	22.5	30	37.5	45	52.5	60
x 1,000 km	12	24	36	48	60	72	84	96
x 1,000 miles	7.5	15	22.5	30	37.5	45	52.5	60
	R	R		R		R		R

REPLACEMENT

1) Remove oil filter with an oil filter wrench.
2) Get a new oil filter and apply a thin coat of engine oil to the seal rubber.
3) Install oil filter by turning it with hand, being careful not to damage seal rubber.
4) Tighten more approximately two thirds turn after the seal rubber contacts the oil pump case. Do not tighten excessively, or oil may leak.
5) After installing oil filter, run engine and make sure that no oil is leaking around seal rubber.

The filter element and filter case are permanently joined; therefore, interior cleaning is not necessary.

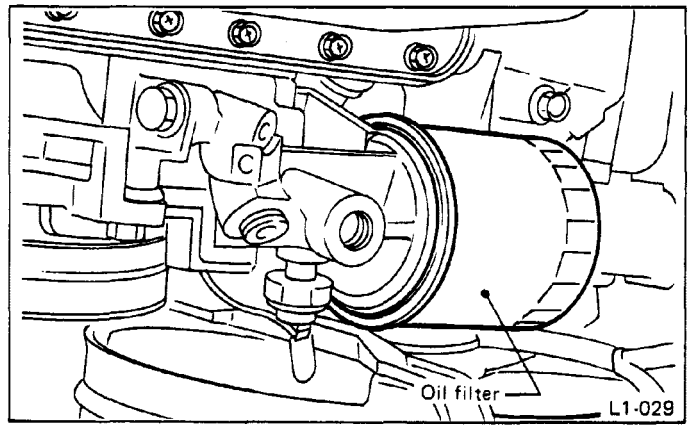

Fig. 14

5 Replace Engine Coolant and Inspect Cooling System, Hoses and Connections

MAINTENANCE INTERVAL [Number of months or km (miles), whichever occurs first]								
Months	7.5	15	22.5	30	37.5	45	52.5	60
x 1,000 km	12	24	36	48	60	72	84	96
x 1,000 miles	7.5	15	22.5	30	37.5	45	52.5	60
				(P)				P

REPLACEMENT

1) Pull out the end of drain tube to the underside of body from between undercover and skirt.

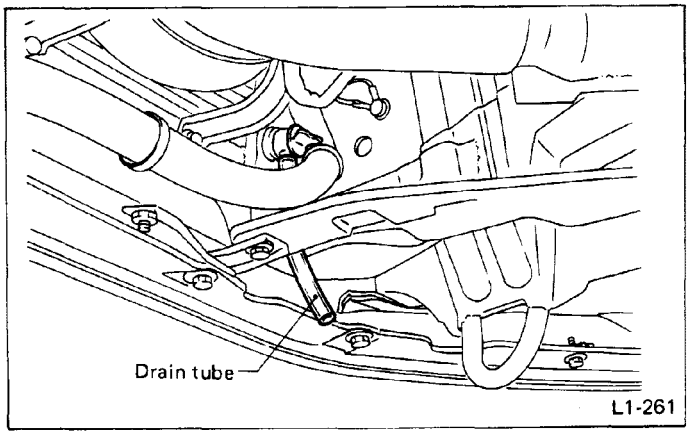

Fig. 15

2) Place a container under drain tube, and loosen drain plug.
3) Loosen radiator cap to drain coolant.
4) Drain coolant from reserve tank.

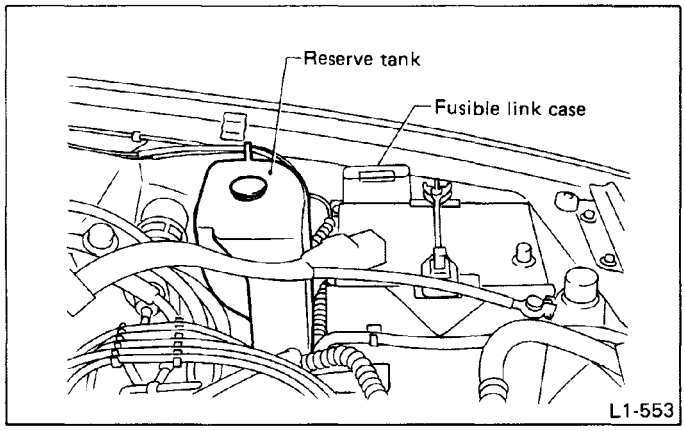

Fig. 16

5) Remove drain plug on engine side, and drain coolant.

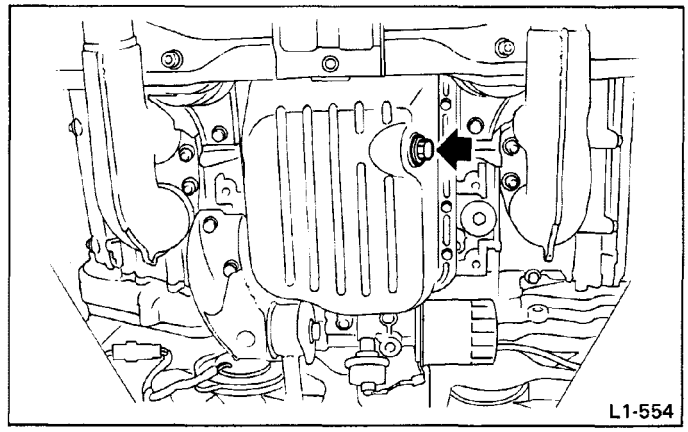

Fig. 17

6) Securely tighten engine side drain plugs.
7) Tighten radiator drain plug securely. (Drain tube may face downward.)
8) Install reserve tank to original position.
9) Carefully pour prepared coolant from radiator filler port to neck of filler, then pour into reserve tank up to "FULL" level.

Coolant capacity (Pour up to "FULL" level):
Approx. 5.5ℓ (5.8 US qt, 4.8 Imp qt) (Except XT6)
Approx. 7ℓ (7.4 US qt, 6.2 Imp qt) (XT6)

The SUBARU Genuine Coolant containing anti-freeze and anti-rust agents is especially made for SUBARU engine, which has an aluminum crankcase. Always use SUBARU Genuine Coolant, since other coolant may cause corrosion.

10) Securely install radiator cap.
11) Run engine for more than five minutes at 2,000 to 3,000 rpm. (Run engine until radiator becomes hot in order to purge air trapped in cooling system.)
12) Stop engine and wait until coolant temperature lowers. Then open radiator cap to check coolant level and add coolant up to radiator filler neck. Next, add coolant into reserve tank up to "FULL" level.

The radiator is of the pressurized type. Do not attempt to open the radiator cap immediately after the engine has been stopped.

13) After adding coolant, securely install radiator and reserve tank caps.

RELATIONSHIP OF SUBARU COOLANT CONCENTRATION AND FREEZING TEMPERATURE

The concentration and safe operating temerature of the SUBARU coolant is shown in the following diagram. Measuring the temperature and specific gravity of the coolant will provide this information.

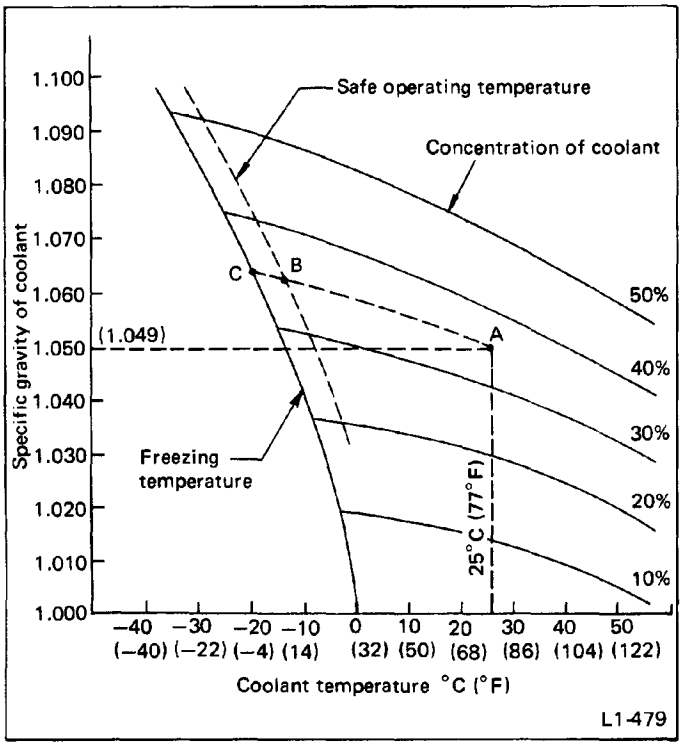

Fig. 18

[Example]

If the coolant temperature is 25°C (77°F) and its specific gravity is 1.049, the concentration is 35% (point A), the safe operating temperature is −14°C (7°F) (point B), and the freezing temperature is −20°C (−4°F) (point C).

PROCEDURE TO ADJUST THE CONCENTRATION OF THE COOLANT

To adjust the concentration of the coolant according to temperature, find the proper fluid concentration in the above diagram and replace the necessary amount of coolant with an undiluted solution of SUBARU genuine coolant (concentration 50%).

The amount of coolant that should be replaced can be determined using the following diagram.

(1) Except XT6

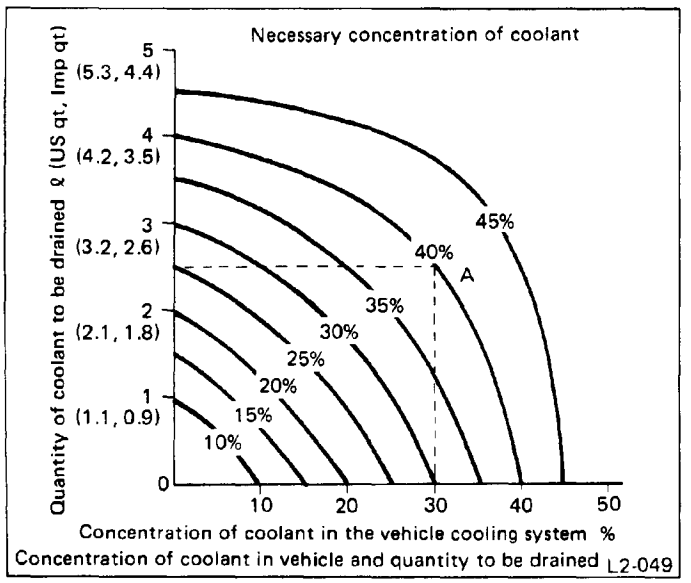

Fig. 19

[Example]

Assume that the coolant concentration must be increased from 30% to 40%. Find point A, where the 30% line of coolant concentration intersects with the 40% curve of the necessary coolant concentration, and read the scale on the vertical axis of the graph at height A. The quantity of coolant to be drained is 2.5 liters (2.6 US qt, 2.2 Imp qt). Drain 2.5 liters (2.6 US qt, 2.2 Imp qt) of coolant from the cooling system and add 2.5 liters (2.6 US qt, 2.2 Imp qt) of the undiluted solution of SUBARU coolant.

If a coolant concentration of 50% is needed, drain all the coolant and refill with the undiluted solution only.

(2) XT6

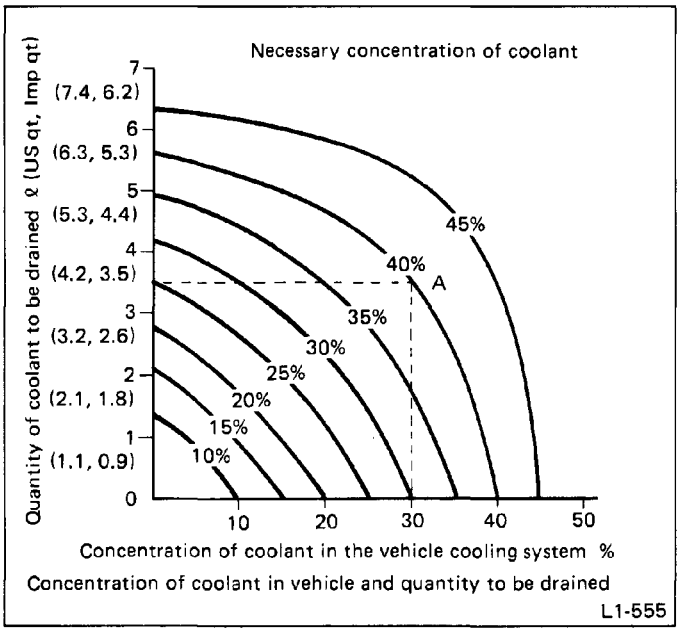

Fig. 20

[Example]

Assume that the coolant concentration must be increased from 30% to 40%. Find point A, where the 30% line of coolant concentration intersects with the 40% curve of the necessary coolant concentration, and read the scale on the vertical axis of the graph at height A. The quantity of coolant to be drained is 3.5 liters (3.7 US qt, 3.1 Imp qt). Drain 3.5 liters (3.7 US qt, 3.1 Imp qt) of coolant from the cooling system and add 3.5 liters (3.7 US qt, 3.1 Imp qt) of the undiluted solution of SUBARU coolant.

If a coolant concentration of 50% is needed, drain all the coolant and refill with the undiluted solution only.

INSPECTION

1) Check the radiator reserve tank and hoses for damage or clogging.

2) Check the hose connections for leakage.

3) Check the valve, spring and packing in the cap for damage.

4) Check rubber seal on cap for tears, cracks or deterioration after cleaning it.

Install the cap on a tester and if cap does not hold or does not release the specified pressure, replace cap.

Cap relief pressure:
88 kPa (0.9 kg/cm^2, 13 psi)

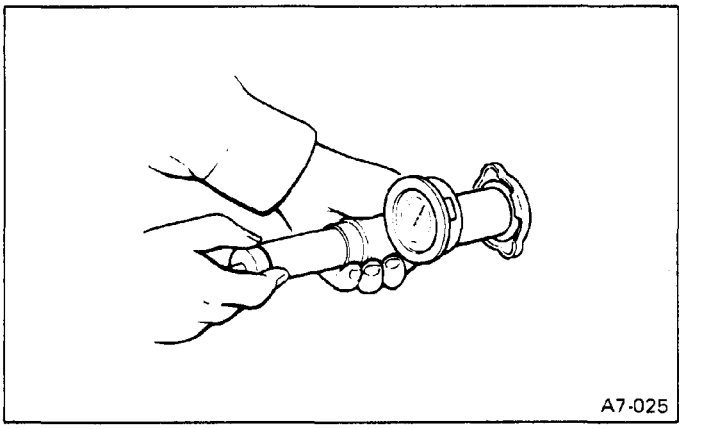

Fig. 21

5) Check the radiator for leakage.

Inspect radiator for leakage using a cap tester and applying a pressure of 157 kPa (1.6 kg/cm^2, 23 psi).

If a leakage is detected, repair or replace the radiator.

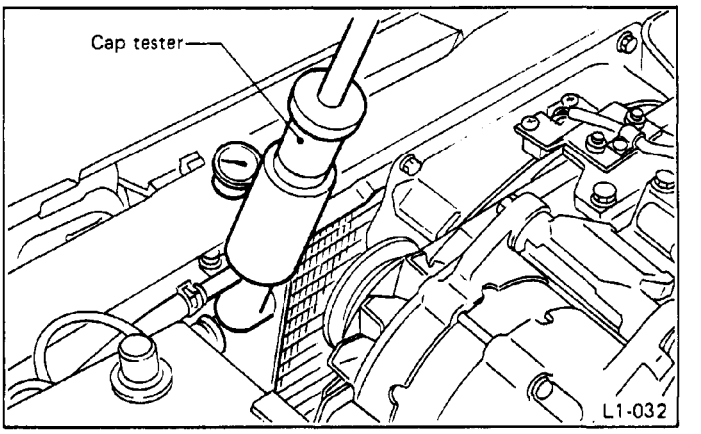

Fig. 22

6)* If the coolant temperature exceeds 86.5 to 89.5°C (188 to 193°F) while radiator is not so hot, check thermostat. (Except XT6)

If the coolant temperature exceeds 90 to 94°C (194 to 201°F) while radiator is not so hot, check thermostat. (XT6)

7)* If thermostat does not open at 86.5 to 89.5°C (188 to 193°F), replace it with a new one. (Except XT6)

If thermostat does not open at 90 to 94°C (194 to 201°F), replace it with a new one. (XT6)

8) If electric fan does not operate with coolant temperature above 93 to 97°C (199 to 207°F), check thermoswitch or fan motor.

*** Refer to Chap. 2-5.**

6 Replace Fuel Filter and Inspect Fuel System Hoses and Connections

MAINTENANCE INTERVAL [Number of months or km (miles), whichever occurs first]								
Months	7.5	15	22.5	30	37.5	45	52.5	60
x 1,000 km	12	24	36	48	60	72	84	96
x 1,000 miles	7.5	15	22.5	30	37.5	45	52.5	60
				(P)				P

REPLACEMENT

a. Before starting the job, be sure to carry out the following.
- **Place "No fire" signs near the working area.**
- **Disconnect ground cable from battery.**

b. Be careful not to spill fuel on the floor.

MPFI

1) Removal

(1) Before removing the hose, filter, pump, etc., be sure to release the fuel pressure, as follows:
- Disconnect the wiring connector of the fuel pump.
- Crank the engine for more than five seconds. If the engine starts, let the engine run until it stops.
- After turning IG switch OFF, connect the wiring connector of the fuel pump.

(2) Loosen the screw of the hose clamp and pull off the hose from the filter.

(3) Remove the filter from the holder.

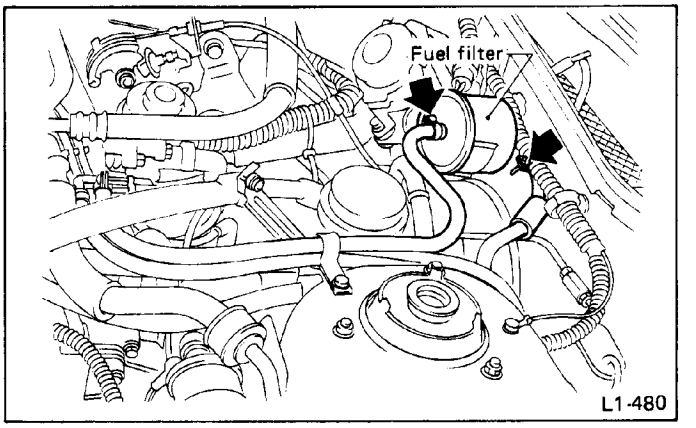

Fig. 23

2) Installation

(1) Install the filter to the holder.

(2) Connect the hose as illustrated below:

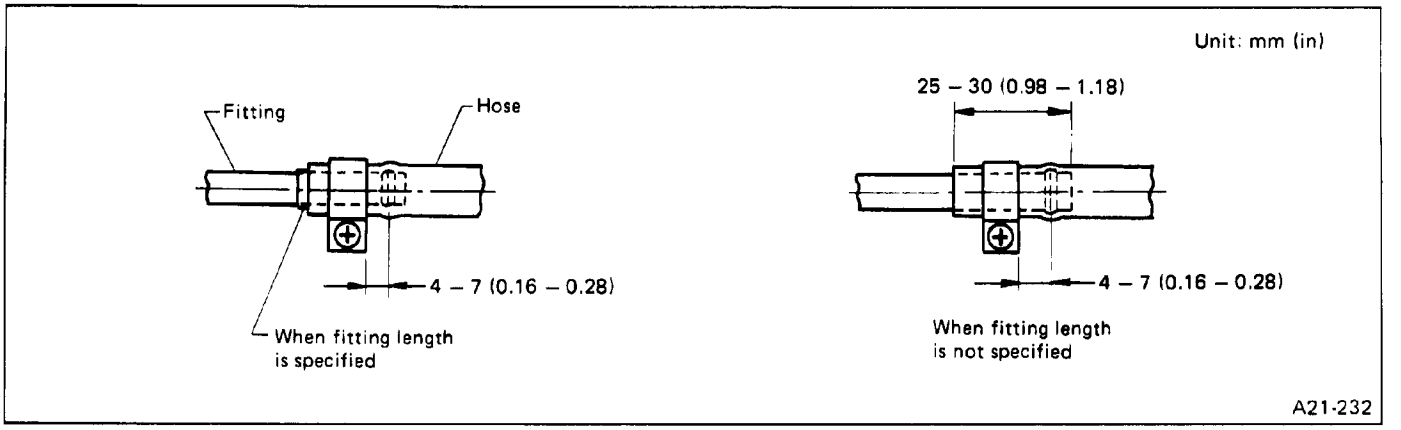

Fig. 24

(3) Tighten the hose clamp screw to the specified torque.

Tightening torque:
1.0 – 1.5 N·m (0.1 – 0.15 kg-m, 0.7 – 1.1 ft-lb)

(4) If the hose is damaged at the clamping portion, replace the hose with a new one.

(5) If the hose clamp is too deformed, replace with a new one.

(6) Fit the hose to the filter, then install the filter to the holder. Correct the hose position by removing any twist so that it will not interfere with the filter body or washer tank, before tightening the screw of the hose clamp.

INSPECTION

FUEL PIPING AND CONNECTIONS

Check fuel piping and connections for leakage.

7 Air Filter Elements (Air cleaner, PCV air filter)

MAINTENANCE INTERVAL [Number of months or km (miles), whichever occurs first]								
Months	7.5	15	22.5	30	37.5	45	52.5	60
x 1,000 km	12	24	36	48	60	72	84	96
x 1,000 miles	7.5	15	22.5	30	37.5	45	52.5	60
				R				R

REPLACEMENT

MPFI

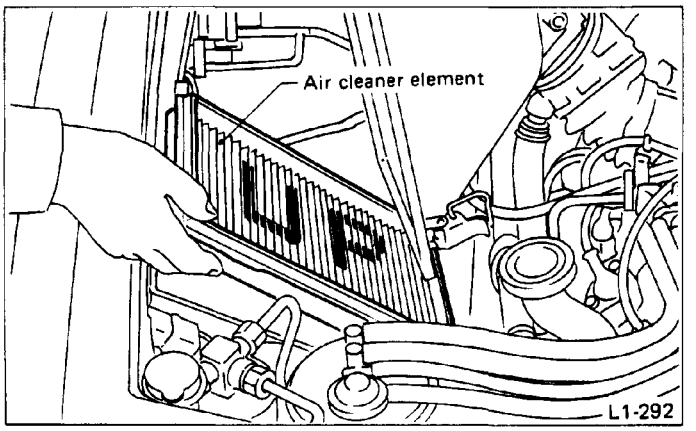

Fig. 25

a. Do not attempt to clean the air cleaner element.
The filter paper of the element is wetted with a special non-inflammable slow-evaporating viscous liquid. It is resistant to cold weather and has a long service life. Dirt adhering to this filter paper forms porous laminations with the viscous liquid, which function as a filtration layer to reduce dust penetration into the filter paper. If this filter paper is cleaned, the filtration layer thus formed will be lost along with the viscous liquid.
b. Under extremely dusty conditions, replace it more frequently.

8 Spark Plug

MAINTENANCE INTERVAL [Number of months or km (miles), whichever occurs first]								
Months	7.5	15	22.5	30	37.5	45	52.5	60
x 1,000 km	12	24	36	48	60	72	84	96
x 1,000 miles	7.5	15	22.5	30	37.5	45	52.5	60
				R				R

REPLACEMENT

Recommended spark plugs
- **For U.S.A.**
  - **NGK: BPR6ES-11**
    (or BPR5ES-11, BPR7ES-11)
  - **Nippondenso: W20EPR-U11**
    (or W16EPR-U11, W22EPR-U11)
  - **Champion: RN9YC-4**
    (or RN11YC-4)
- **For Canada**
  - **Champion: RN9YC-4**
    (or RN11YC-4)

Spark plug gap
1.0 – 1.1 mm (0.039 – 0.043 in)

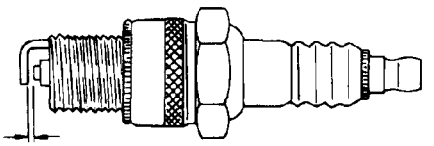

1.0 – 1.1 mm (0.039 – 0.043 in)

Spark plug thread
Dia. = 14 mm (0.55 in)
Pitch = 1.25 mm (0.0492 in)

A9-163

Fig. 26

When installing spark plugs on cylinder head, tighten to the specified torque.

Tightening torque:
18 – 24 N·m (1.8 – 2.4 kg-m, 13 – 17 ft-lb)

Be sure to place the gasket between the cylinder head and spark plug.

9 Transmission/ Differential (Front and rear) Lubricants (Gear oil)

MAINTENANCE INTERVAL [Number of months or km (miles), whichever occurs first]								
Months	7.5	15	22.5	30	37.5	45	52.5	60
x 1,000 km	12	24	36	48	60	72	84	96
x 1,000 miles	7.5	15	22.5	30	37.5	45	52.5	60
				I				

INSPECTION

MANUAL TRANSMISSION

Inspect the transmission gear oil level. If the oil level is at the lower point or below, add some oil through the oil level gauge hole up to the upper point of gauge.

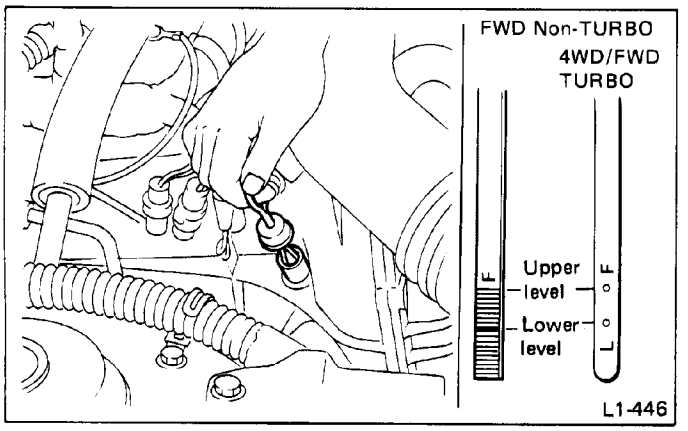

Fig. 27

FRONT DIFFERENTIAL (Automatic Transmission)

Oil level should be maintained between two points on the level gauge. If the oil level is at lower point or below, add some oil up to upper point.

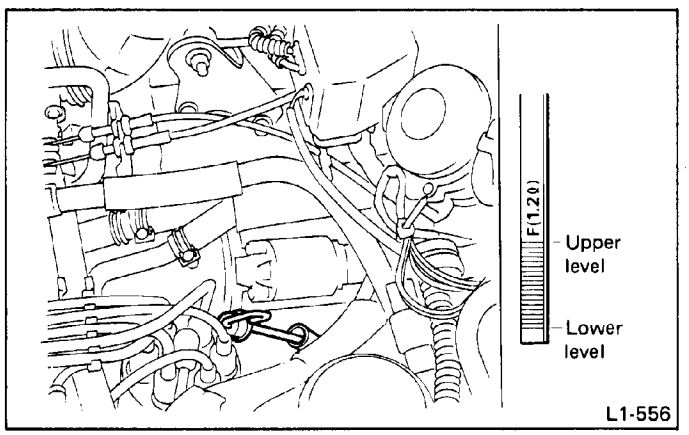

Fig. 28

REAR DIFFERENTIAL (4WD Vehicle)

Remove plug of filler hole and check the oil level. Oil level should be maintained fully to the filler hole.
If the oil level is below the mouth of filler hole, add some oil up to the mouth.

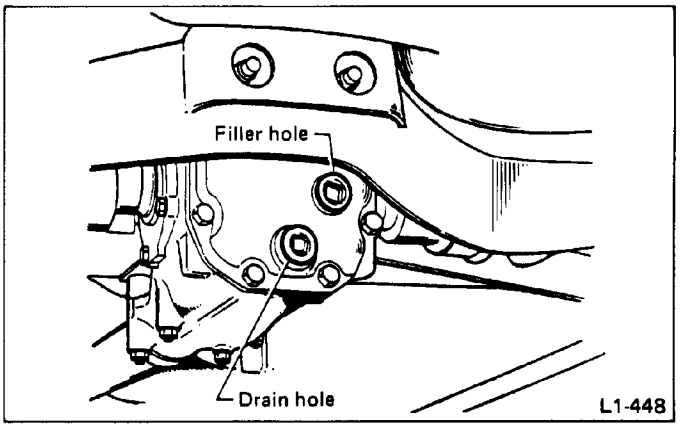

Fig. 29

Recommended oil

ITEM	API Classification	SAE Viscosity No. and Applicable Temperature					
		(°F)	-30	0	30	60	90
		(°C)	-34	-18	0	16	32
• Transmission and differential gear oil • 4WD rear differential gear oil	GL-5	90 85W 80W 75W-90, *80W-90					

a. Each oil manufacturer has its base oil and additives. Thus, do not mix two or more brands.
b. * For differential gear oil (AT)

10 Automatic Transmission Fluid

MAINTENANCE INTERVAL [Number of months or km (miles), whichever occurs first]								
Months	7.5	15	22.5	30	37.5	45	52.5	60
x 1,000 km	12	24	36	48	60	72	84	96
x 1,000 miles	7.5	15	22.5	30	37.5	45	52.5	60
FWD vehicle				I				
4WD vehicle				R				R

INSPECTION

1) Drive vehicle several km (miles) to bring automatic transmission fluid (ATF) up to normal operating temperature. Normal operating temperature is 60 to 80°C (140 to 176°F).
2) Park vehicle on a level surface.
3) After selecting all positions (P, R, N, D, 2, 1), place selector lever in "P" position and run engine on at idling speed.
4) Remove level gauge and wipe it clean.
5) Reinsert the level gauge all the way.
6) Remove it again and note reading. If the fluid level is below the center between high and low marks, add recommended ATF until the fluid level is within the specified range (above the center between high and low marks). When transmission is hot, the level should be above the center of upper and lower marks, and when it is cold, the level should be below the center of these two marks.
ATF level gauge hole also serves as fluid filler.

Do not fill the fluid above upper point of level gauge.

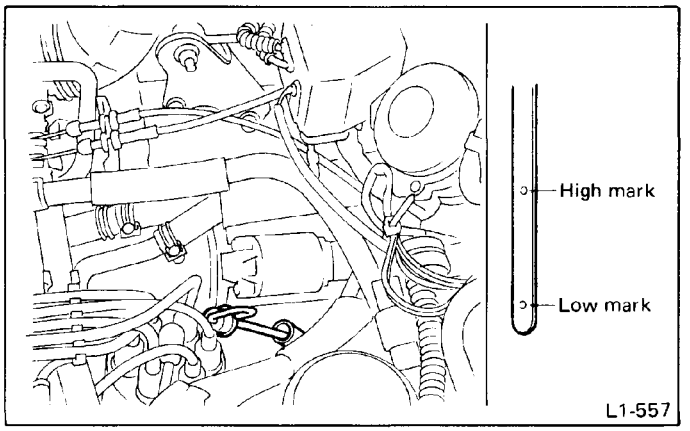

Fig. 30

Recommended automatic transmission fluid (ATF Dexron II)

REPLACEMENT

1) Drain fluid by removing drain plug after allowing the engine to cool for 3 to 4 hours.

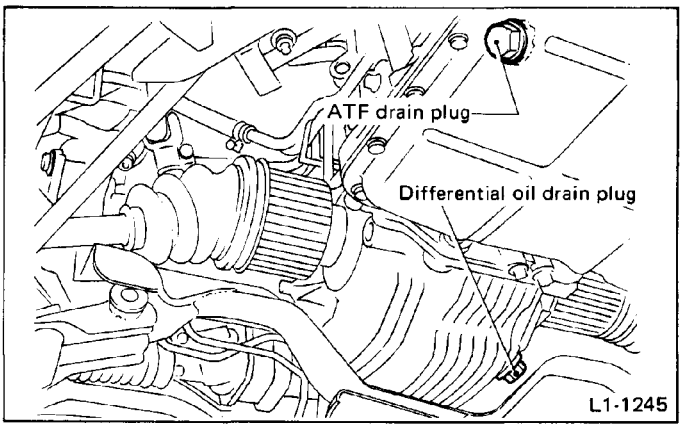

Fig. 31

2) Reinstall drain plug after draining fluid, and tighten it to the specified torque.

Tightening torque:
25 N·m (2.5 kg-m, 18 ft-lb)

a. Be sure to place a gasket between oil pan and drain plug.
b. Replace the gasket with new one.

3) Fill ATF through the fluid level gauge hole.

Oil capacity:

1800 cc		**9.3 ℓ (9.8 US qt, 8.2 Imp qt)**
2700 cc	**FWD**	**9.3 ℓ (9.8 US qt, 8.2 Imp qt)**
	4WD	**9.5 ℓ (10.0 US qt, 8.4 Imp qt)**

4) Run the vehicle until the ATF temperature rises to 60 to 80°C (140 to 176°F) and then check the ATF level.

11 Brake Fluid

MAINTENANCE INTERVAL [Number of months or km (miles), whichever occurs first]								
Months	7.5	15	22.5	30	37.5	45	52.5	60
x 1,000 km	12	24	36	48	60	72	84	96
x 1,000 miles	7.5	15	22.5	30	37.5	45	52.5	60
				R				R

REPLACEMENT

1) Either jack up the front end of vehicle and place a safety stand under it, or drive vehicle onto the pit and then jack up the front end.
2) Remove both left and right front wheels.
3) Remove filler cap from brake fluid tank.

Install one end of a vinyl tube onto the air bleeder of front brake and insert the other end of the tube into a container to collect the brake fluid.

To drain fluid into container, open the air bleeder and repeatedly depress and release the brake pedal until a small amount of fluid remains in the reservoir tank.

Then tighten the bleeder screw.

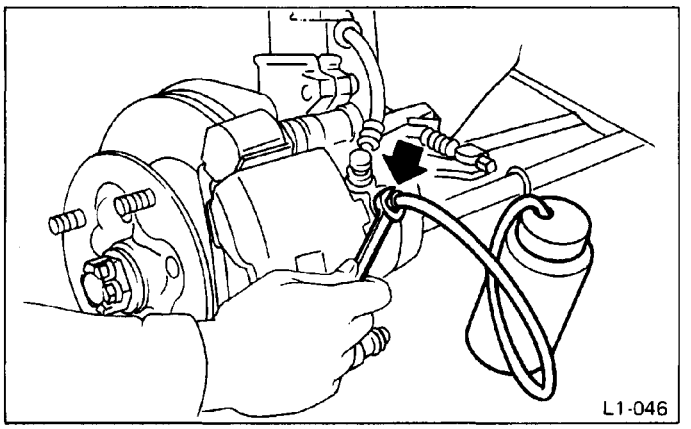

Fig. 32

a. The brake piping consists of a dual system, cross design. The piping on the primary side connects the right front brake and the rear left brake and the piping on the secondary side connects the left front brake and rear right brake.
b. For convenience and safety, it is advisable to have two men working.
c. Be careful not to spill brake fluid onto the painted surface.
d. Discard the drained brake fluid and do not reuse it.

4) Refill reservoir tank with recommended brake fluid.

Recommended brake fluid:
FMVSS No. 116, fresh DOT3 or 4 brake fluid

a. Avoid mixing different brands of brake fluid to prevent degrading the quality of the fluid.
b. Be careful not to allow dirt or dust to get into the reservoir tank.
c. Use fresh DOT3 or 4 brake fluid when replacing or refilling the fluid.
d. Always check to be sure a small amount of brake fluid is in the tank while changing brake fluid.
e. The amount of brake fluid required is approximately 270 mℓ (9.1 US fl oz, 9.5 Imp fl oz) for total brake system.
f. Bleed air according to illustrated sequence.

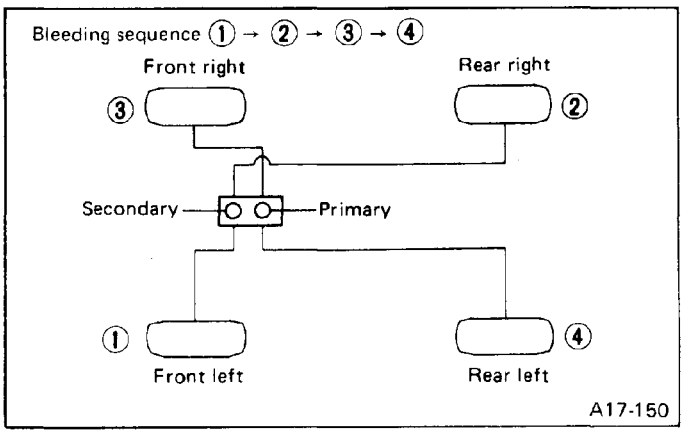

Fig. 33

5) Instruct your co-worker to depress the brake pedal slowly two or three times and then hold it depressed.
6) Loosen bleeder screw approximately 1/4 turn until a small amount of brake fluid drains into container, and then quickly tighten screw.
7) Repeat steps 5) and 6) above until there are no air bubbles in drained brake fluid and new fluid flows through vinyl tube.

Add brake fluid as necessary while performing the air bleed operation, in order to prevent the tank from running short of brake fluid.

8) After completing the bleeding operation, hold brake pedal depressed and tighten screw and install bleeder cap.

Tightening torque (Bleeder screw):
7 – 9 N·m (0.7 – 0.9 kg-m, 5.1 – 6.5 ft-lb)

9) Bleed air from each wheel cylinder using the same procedures as described in steps 5) through 8) above.

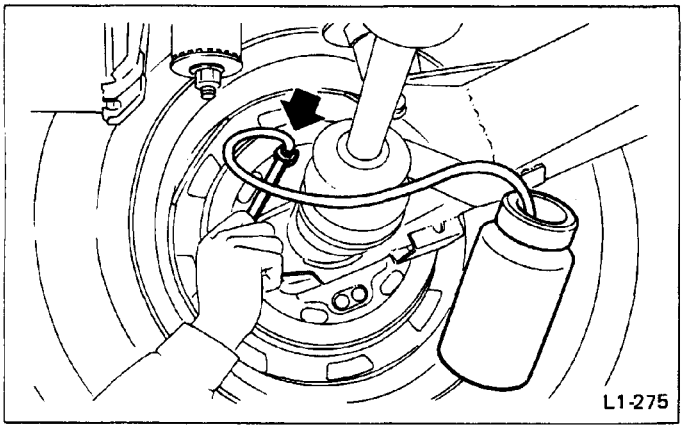

Fig. 34

10) Depress brake pedal with a force of approximately 294 N (30 kg, 66 lb) and hold it there for approximately 20 seconds. At this time check pedal to see if it shows any unusual movement.
Visually inspect bleeder screws and brake pipe joints to make sure that there is no fluid leakage.
11) Install wheels, and drive car for a short distance between 2 to 3 km (1 to 2 miles) to make sure that brakes are operating properly.

12 Disc Brake Pad and Disc/Front and Rear Axle Boots

MAINTENANCE INTERVAL [Number of months or km (miles), whichever occurs first]								
Months	7.5	15	22.5	30	37.5	45	52.5	60
x 1,000 km	12	24	36	48	60	72	84	96
x 1,000 miles	7.5	15	22.5	30	37.5	45	52.5	60
		■		■		■		■

INSPECTION

[A] Disc Brake Pad and Disc (Front and Rear)

1) Jack up vehicle and support with rigid racks. Then remove wheels.
2) Visually check pad thickness through inspection hole of disc brake assembly. Replace pad if necessary.

FRONT

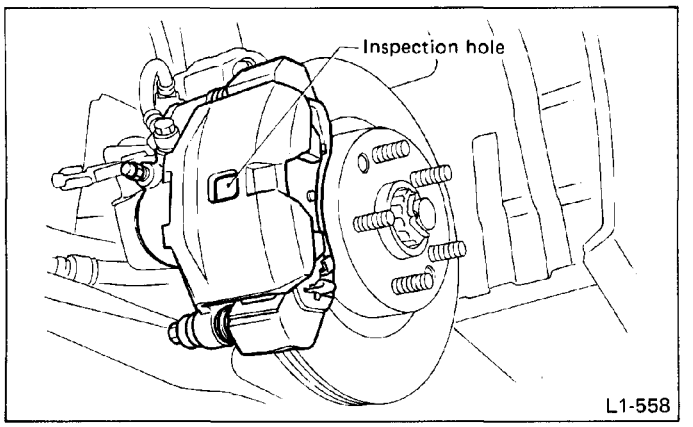

Fig. 35

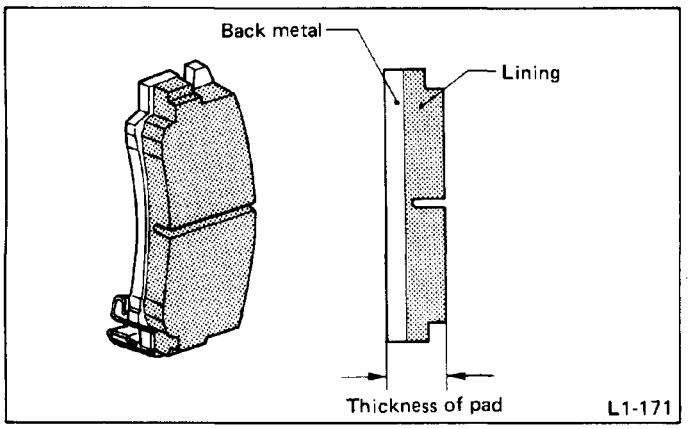

Fig. 36

REAR

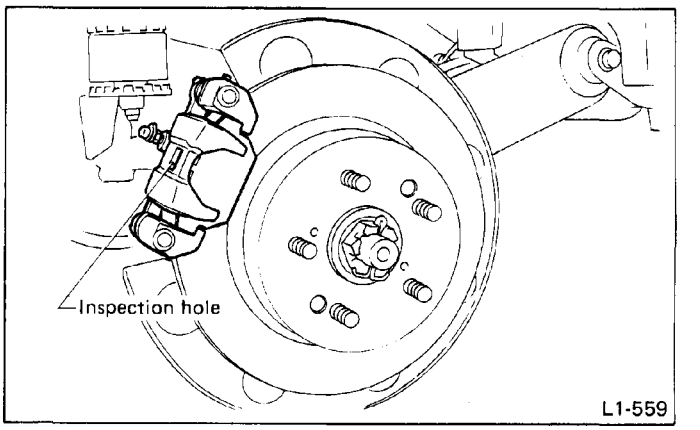

Fig. 37

Pad thickness including back metal mm (in)			
		Front	Rear
Standard	Except XT6	18 (0.71)	15 (0.59)
	XT6	22 (0.87)	
Wear limit	Except XT6	7.5 (0.295)	6.5 (0.256)
	XT6		8 (0.31)
Wear limit (excluding back metal)	Except XT6	1.5 (0.059)	1.5 (0.059)
	XT6		3 (0.12)

a. When replacing a pad, always replace the pads for both the left and right wheels at the same time. Also replace pad clips if they are twisted or worn.
b. The clip incorporated with pad is also used as a warning device for worn pads. When wear occurs on the pad to such an extent that the clip comes into contact with the rotor, unusual noise (squeak) is produced. If such a noise is noticed, replace the pads.

3) Disc rotor
Check for wear and damage, and correct or replace if abnormal.

Brake disc thickness mm (in)			
		Front	Rear
Standard	Except XT6	18 (0.71)	10 (0.39)
	XT6	22 (0.87)	
Wear limit	Except XT6	16 (0.63)	8.5 (0.33)
	XT6	20 (0.79)	

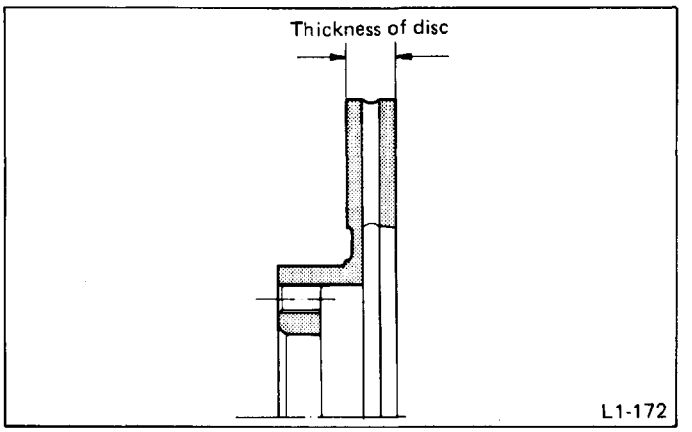

Fig. 38

Disc rotor runout:
Limit: 0.10 mm (0.0039 in)

Measure the disc rotor runout at a point less than 5 mm (0.20 in) from the outer periphery of the rotor.

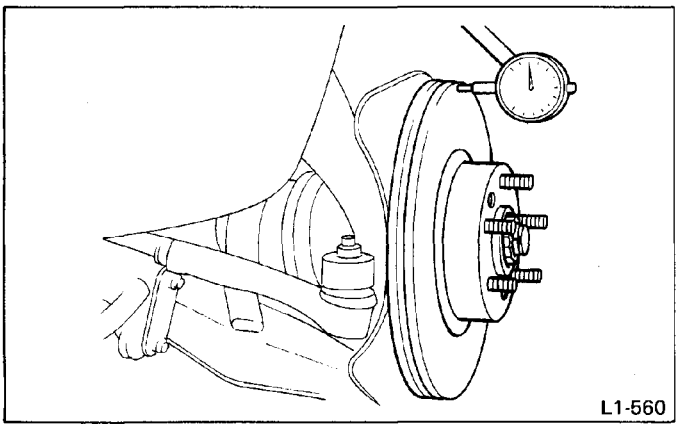

Fig. 39

[B] Front and Rear Axle Boots

Inspect front and rear axle boots for deformation, damage or failure. If faulty, replace them with new ones.

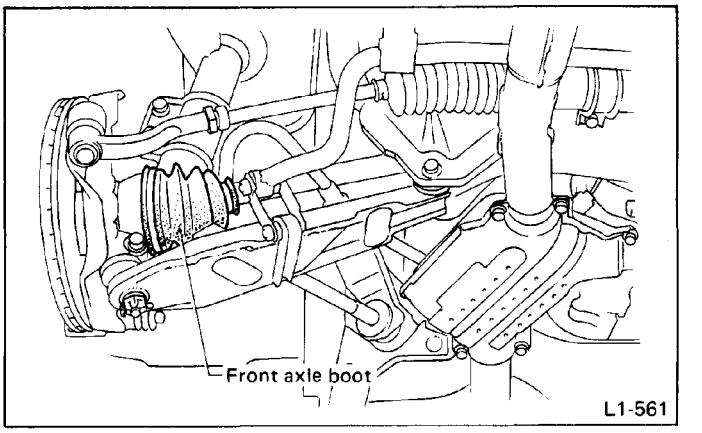

Fig. 40

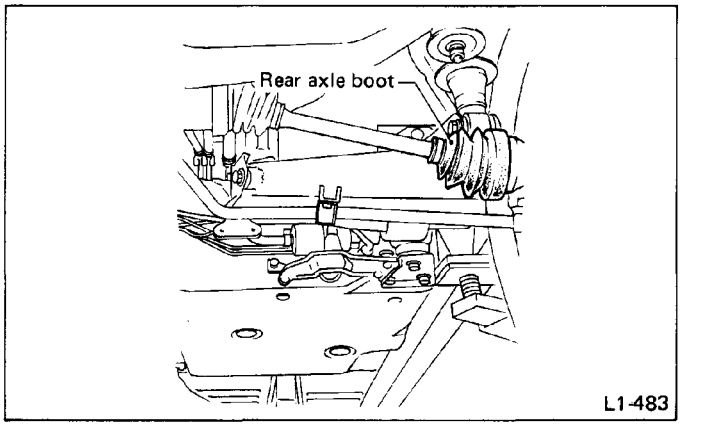

Fig. 41

13 Brake Lining and Drum

MAINTENANCE INTERVAL [Number of months or km (miles), whichever occurs first]								
Months	7.5	15	22.5	30	37.5	45	52.5	60
x 1,000 km	12	24	36	48	60	72	84	96
x 1,000 miles	7.5	15	22.5	30	37.5	45	52.5	60
				■				■

INSPECTION

Inspect brake linings and drums of both sides of the rear brake at the same time by removing brake drums.

1) Inspect brake shoes for damage or deformities and check brake linings for wear.

Always replace both leading and trailing brake shoes for the left and right wheels at the same time.

Brake lining thickness excluding back metal:
Standard:
4.5 mm (0.177 in)
Wear limit:
1.5 mm (0.059 in)

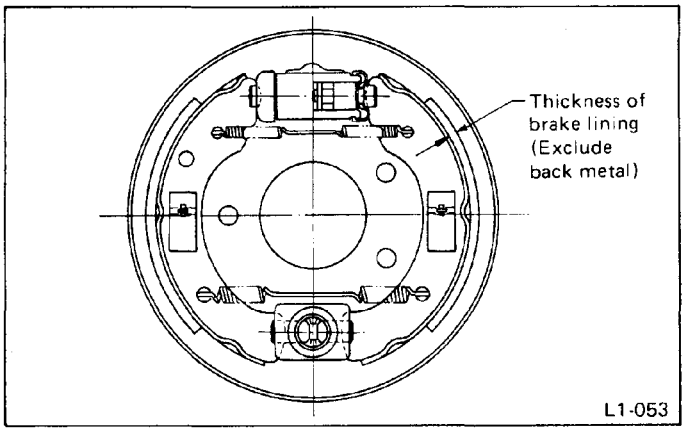

Fig. 42

2) Check brake drum for wear, dents or other damage.
If the inside surface of brake drum is streaked, correct the surface with emery cloth (#200 or more). If it is unevenly worn, taperingly streaked, or the outside surface of brake drum is damaged, correct or replace it.

Brake drum inside diameter:
Standard:
180 mm (7.09 in)
Wear limit:
182 mm (7.17 in)

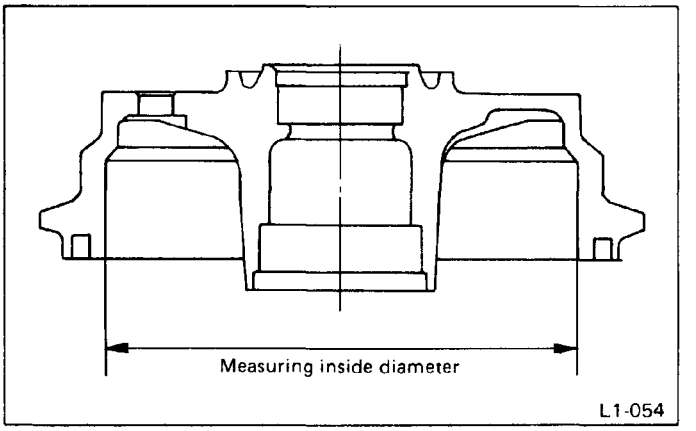

Fig. 43

3) If the deformation or wear of back plate, shoe, etc. are notable, replace them.
4) When the shoe return spring tension is excessively weakened, replace it, taking care to identify upper and lower springs.
5) If grease has leaked from brake drum, replace oil seal or drum.
6) If drum bearing is abnormal or loose, replace it.

14 Inspect Brake Line and Check Operation of Parking and Service Brake System

MAINTENANCE INTERVAL [Number of months or km (miles), whichever occurs first]								
Months	7.5	15	22.5	30	37.5	45	52.5	60
x 1,000 km	12	24	36	48	60	72	84	96
x 1,000 miles	7.5	15	22.5	30	37.5	45	52.5	60
		P		P		P		P

INSPECTION

BRAKE LINE

1) Check scratches, swelling and/or traces of fluid leakage on brake hoses or pipe joints.

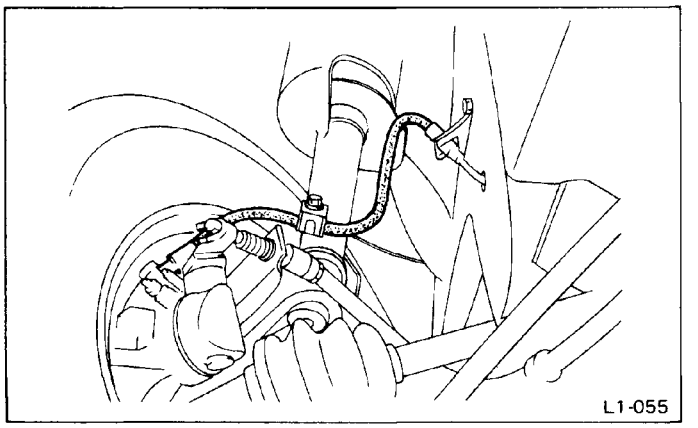

Fig. 44

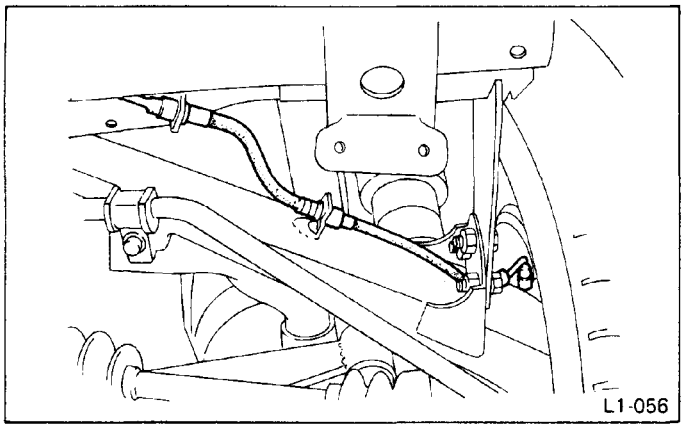

Fig. 45

2) Check the possibility of adjacent parts interfering with brake pipes/hoses during driving, and loose connections/clamps.

3) Check any trace of fluid leakage, scratches, etc. on master cylinder, wheel cylinder, pressure control valve and hill-holder.

When the brake fluid level in the reservoir tank is lower than the specified limit, the brake fluid warning light on the instrument panel will come on.

CHECKING

[A] Service Brake

1) Check the free play of brake pedal by lightly depressing the pedal with your finger with a force of less than 10 N (1 kg, 2 lb).

Brake pedal free play:
0.5 – 2.5 mm (0.020 – 0.098 in)

If the free play is out of specifications above, adjust the brake pedal as follows:

(1) Be sure engine is off. (No vacuum is applied to brake booster.)
(2) There should be play between brake booster clevis and pin at brake pedal installing portion.
(Depress brake pedal pad with a force of less than 10 N [1 kg 2 lb] to a stroke of 0.5 to 2.5 mm [0.020 to 0.098 in].

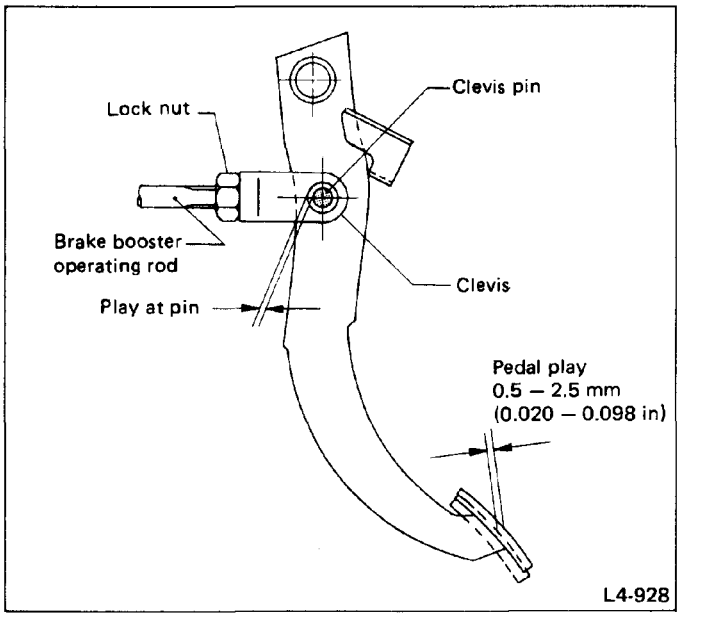

Fig. 46

(3) Depress the surface of brake pad by hand.

(4) If there is no free play between clevis pin and clevis, loosen lock nut for operating rod and adjust operating rod by turning in the direction that shortens it.

a. Make sure that the stop lamp operates normally.
b. After adjustment, make sure there is no brake dragging.

2) Adjust lining clearances of rear drum brake as follows. [FWD only]
(1) Jack up vehicle to release tires and wheels slightly from the ground.
(2) Tighten adjusting screw on back side of rear brake drum fully until tire and wheel ceases to rotate.
(3) Turn back adjusting screw by 180° and lining clearance will be 0.1 to 0.15 mm (0.004 to 0.0059 in).
(4) Be sure to rotate tire and wheel lightly by hand.
(5) Adjust lining clearance of another side rear brake with the same manner.

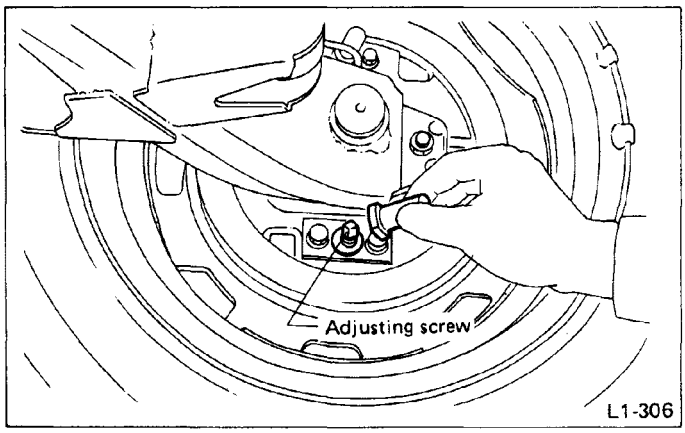

Fig. 47

3) Measure the distance between brake pedal and floor when the pedal is depressed with a force of approximately 294 N (30 kg, 66 lb).

Brake pedal reserve distance:
More than 120 mm (4.72 in)/294 N (30 kg, 66 lb)

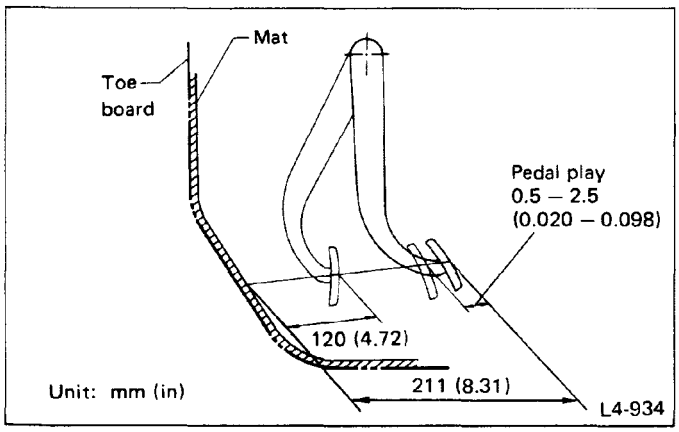

Fig. 48

4) Check to see if air is in the hydraulic brake line by the feel of the pedal operation. If air appears to exist in the line, bleed it from the system.
5) Check for even operation of all brakes, using a brake tester or by driving the vehicle for a short distance on a straight road.

[B] Parking Brake

1) After confirming the proper operation of brake pedal, pull parking brake lever with a force of approximately 245 N (25 kg, 55 lb) to make sure lever still has a short length of stroke to go.

Parking brake lever stroke:
Standard:
3 – 4 notches/245 N (25 kg, 55 lb)
Torque (Adjuster lock nut):
4.4 – 7.4 N·m (0.45 – 0.75 kg-m, 3.3 – 5.4 ft-lb)

2) If the parking brake lever pull is not within the above specifications, adjust it as follows:
(1) Pull parking brake lever forcibly three to five times.
(2) Loosen the lock nut and change the setting of adjuster until the play at point A is 0 to 0.5 mm (0 to 0.020 in).

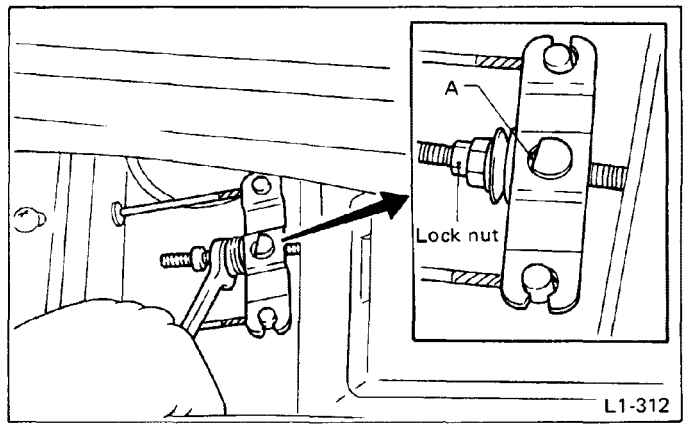

Fig. 49

(3) Make sure that vehicle stops on uphill road properly by operating parking lever.

[C] Brake Servo System

1) With the engine off, depress the brake pedal several times applying the same pedal force: Make sure the travel distance should not change.
2) With the brake pedal depressed, start the engine: Make sure the pedal should move slightly toward the floor.
3) With the brake pedal depressed, stop the engine and keep the pedal depressed for 30 seconds: Make sure the pedal height should not change.

4) Check valve is built into vacuum hose. Disconnect vacuum hose to inspect function of check valve.
Blow air into vacuum hose from its brake booster side end: Air must flow out of engine side end of hose. Next blow air into hose from engine side: Air should not flow out of hose.
Replace both check valve and vacuum hose if check valve is faulty. Engine side of vacuum hose is indicated by marking " ENGINE " as shown.

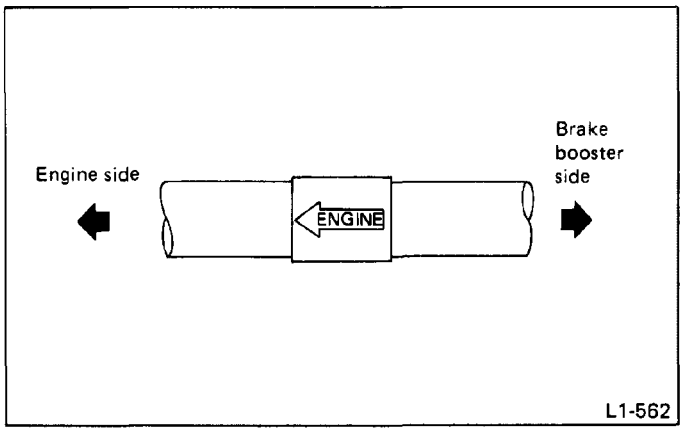

Fig. 50

5) Check vacuum hose for cracks or other damage.

When installing the vacuum hose on the engine and brake booster, do not use soapy water or lubricating oil on their connections.

6) Check vacuum hose to make sure it is tight and secure.

15 Clutch and Hill-holder System

MAINTENANCE INTERVAL [Number of months or km (miles), whichever occurs first]								
Months	7.5	15	22.5	30	37.5	45	52.5	60
x 1,000 km	12	24	36	48	60	72	84	96
x 1,000 miles	7.5	15	22.5	30	37.5	45	52.5	60
		■		■		■		■

INSPECTION AND ADJUSTMENT

1) Inspect free play of clutch pedal by operating pedal by hand.
If it is out of the specified value, adjust it by turning adjusting nut on engine side end of clutch cable at release fork.

Standard of free play:
At clutch pedal:
10 – 20 mm (0.51 – 0.79 in)
At center of cable on clutch release fork:
FWD: 2 – 3 mm (0.08 – 0.12 in)
4WD: 3 – 4 mm (0.12 – 0.16 in)

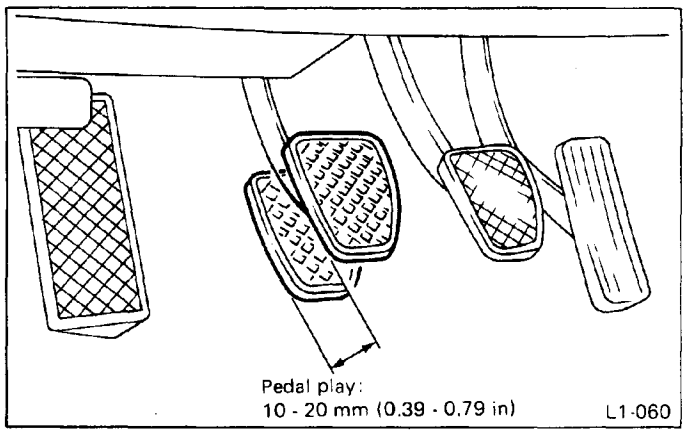

Fig. 51

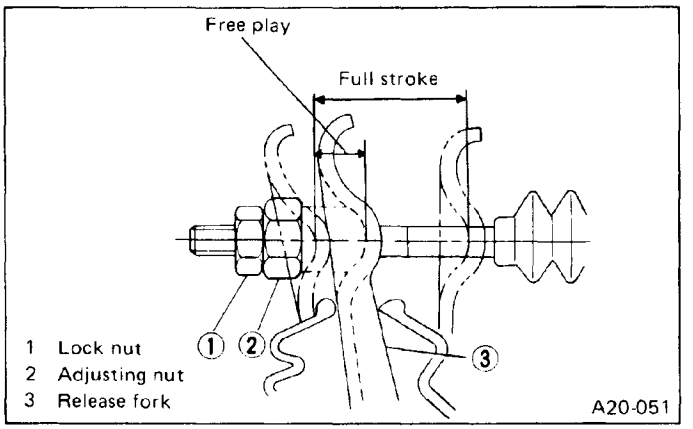

Fig. 52

Tightening torque (Adjusting nut on release fork):
5.4 – 9.3 N·m (0.55 – 0.95 kg-m, 4.0 – 6.9 ft-lb)

a. When replacing clutch cable with new one and/or making free play adjustment of clutch pedal, make adjustment of hill-holder system without fail as follows.
b. After replacing clutch cable and/or pressure hold valve (PHV) cable with new one, depress clutch pedal about thirty (30) times as a running-in operation prior to this adjustment.

2) Confirm stopping and starting performance by activating hill-holder on an uphill road of 3° or higher inclination.
(1) If vehicle does not stop;
Tighten adjusting nut of PHV cable.

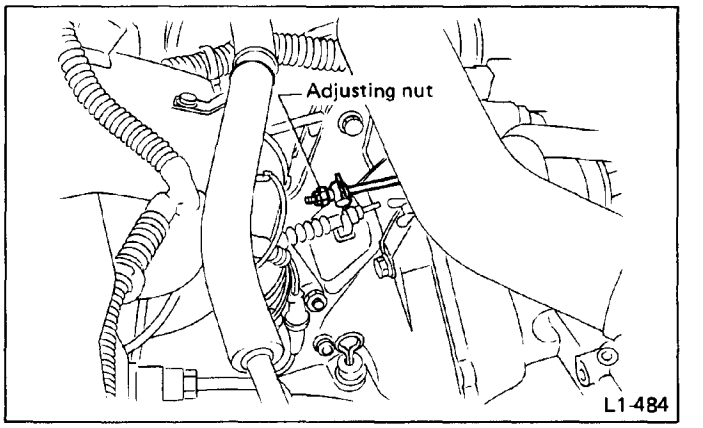

Fig. 53

(2) If vehicle does not start properly;
- Case A – When hill-holder is released later than engagement of clutch (engine tends to stall):
  Loosen adjusting nut gradually until smooth starting is enabled.
- Case B – When hill-holder is released earlier than engagement of clutch (vehicle slips down slightly):
  Tighten adjusting nut so that hill-holder is released later than engagement of clutch (status in Case A). Then make adjustment the same as in Case A.

a. Whenever turning adjusting nut, prevent PHV cable from revolving as following illustration.

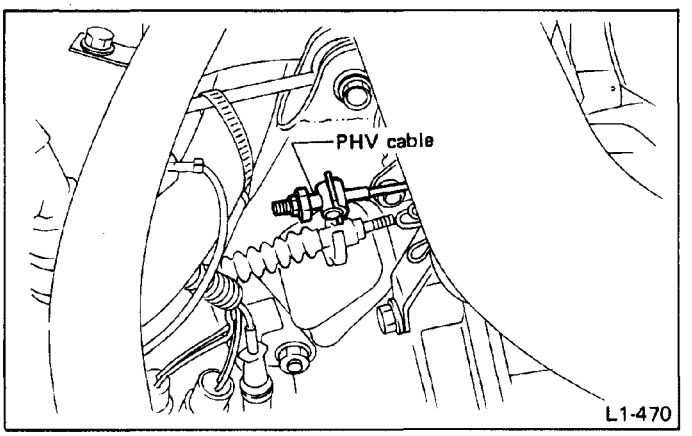

Fig. 54

b. Replace pressure hold valve (PHV), return spring of PHV or PHV cable with new one, if they are defective and/or damaged.

16 Steering and Suspension

MAINTENANCE INTERVAL [Number of months or km (miles), whichever occurs first]								
Months	7.5	15	22.5	30	37.5	45	52.5	60
x 1,000 km	12	24	36	48	60	72	84	96
x 1,000 miles	7.5	15	22.5	30	37.5	45	52.5	60
		I		I		I		I

INSPECTION

STEERING WHEEL

1) Set steering wheel in a straight-ahead position, and check wheel spokes to make sure they are correctly set in their specified positions.
2) Lightly turn steering wheel to the left and right to determine the point where front wheels start to move.
Measure the distance of the movement of steering wheel at the outer periphery of wheel.

Steering wheel free play:
0 – 17 mm (0 – 0.67 in)

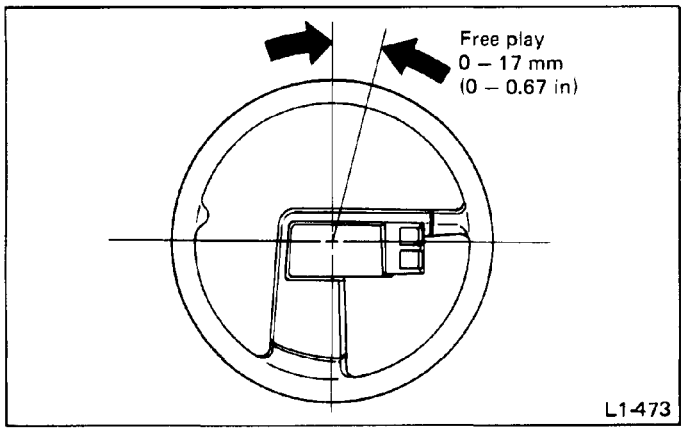

Fig. 55

3) Move steering wheel vertically toward the shaft to ascertain if there is play in that direction.

Maximum permissible play:
0.5 mm (0.020 in)

4) Drive vehicle and check the following items during operation.
(1) Steering force .....
The effort required for steering should be smooth and even at all points, and should not vary.
(2) Pull to one side .....
Steering wheel should not be pulled to either side while driving on a level surface.
(3) Wheel runout .....
Steering wheel should not show any sign of runout.
(4) Return factor .....
Steering wheel should return to its original position after it has been turned and then released.

STEERING SHAFT JOINT

1) Disconnect universal joint of steering shaft and check it for any play and yawing torque (at the point of the crossing direction). Also inspect for any damage to sealing or worn serrations.

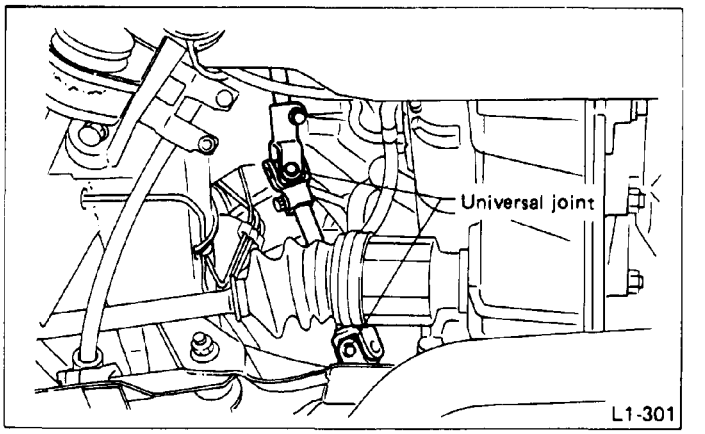

Fig. 56

If the joint is loose, retighten the mounting bolts to the specified torque.

Tightening torque:
21 – 26 N·m (2.1 – 2.7 kg-m, 15 – 20 ft-lb)

GEARBOX

1) With wheels placed on a level surface, turn steering wheel 90° in both the left and right directions.
While wheel is being rotated, reach under vehicle and check for looseness in gearbox.

Tightening torque:
47 – 71 N·m (4.8 – 7.2 kg-m, 35 – 52 ft-lb)

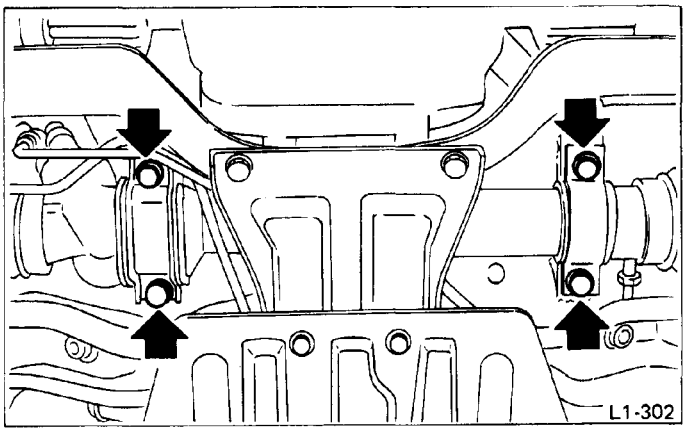

Fig. 57

2) Check boot for damage, cracks or deterioration.

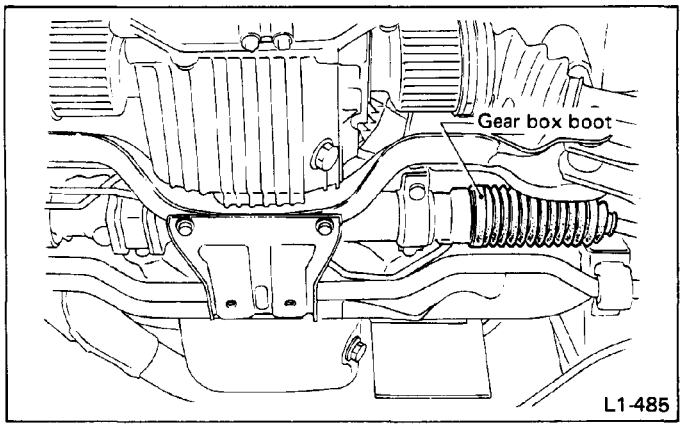

Fig. 58

3) With vehicle on a level surface, quickly turn steering wheel to the left and right.
While steering wheel is being rotated, check the gear backlash. If any unusual noise is noticed, adjust the gear backlash as follows:

(1) Loosen gearbox mounting clamps, and slightly lower gear box.

(2) Loosen lock nut by using Spanner (Special tool) and tighten adjusting screw fully.

	Tool No.	Tool name
Manual steering	925640000	SPANNER (STEERING GEAR BOX)
Power steering	926230000	SPANNER (STEERING GEAR BOX)

SPANNER (926230000) can be also used for manual steering.

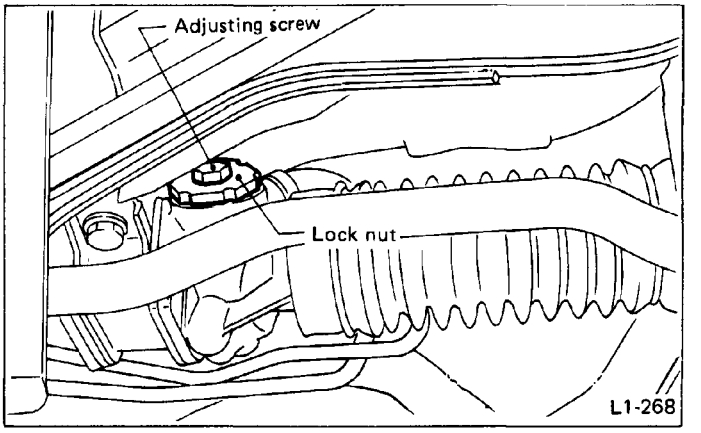

Fig. 59

(3) From that position, turn back adjusting screw 15° and then tighten lock nut securely.

Tightening torque:
29 – 49 N·m (3.0 – 5.0 kg-m, 22 – 36 ft-lb)

Hold the adjusting screw with a wrench to prevent it from turning while tightening the lock nut.

TIE-ROD

1) Check tie-rod and tie-rod ends for bends, scratches or other damage.
2) Check connections of knuckle ball joints for play, inspect for damage on dust seals, and check the free play of ball studs.
3) Make sure that the cotter pin is installed correctly in the castle nut of the tie-rod end.

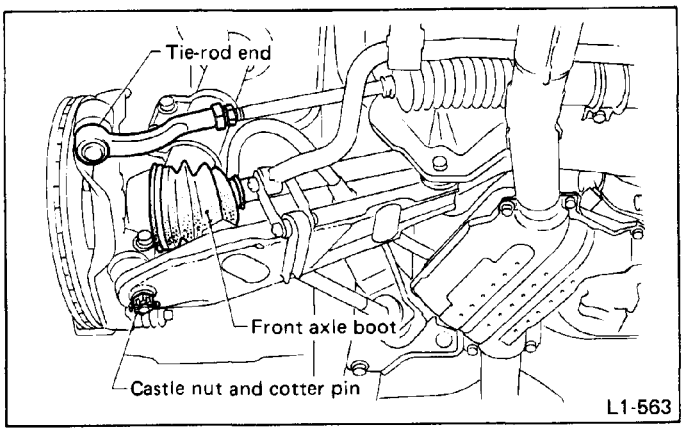

Fig. 60

POWER STEERING FLUID LEVEL

1) Place vehicle with engine "off" on the flat and level surface.

2) Check the fluid level by removing filler cap of oil pump.
(1) Check at temperature 21°C (70°F) of fluid temperature.

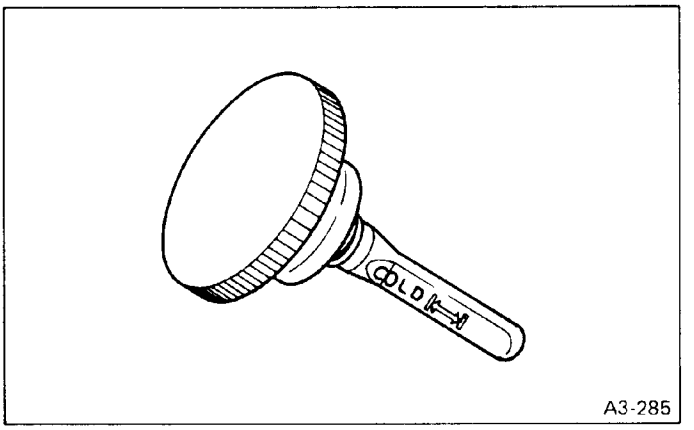

Fig. 61

(2) Check at temperature 60°C (140°F) of fluid temperature.

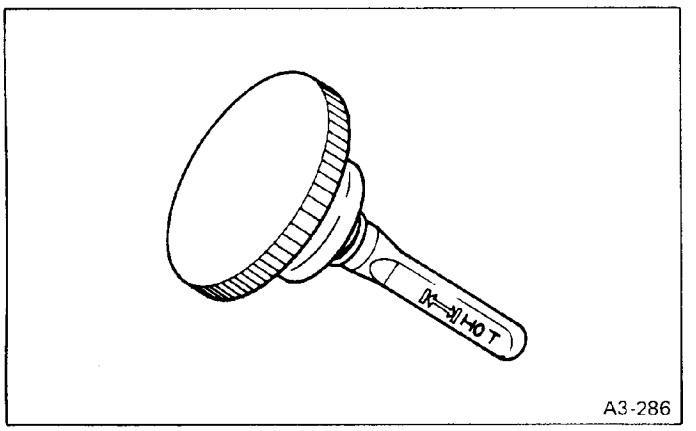

Fig. 62

3) Fluid level should be maintained in the each specified range on the indicator of filler cap.
If fluid level is at lower point or below, add fluid to keep the level in the specified range of indicator.
If fluid level is at upper point or above, drain fluid to keep the level in the specified range of indicator by using a syringe or the like.

- **Except XT6**

Recommended fluid	Manufacturer
ATF Dexron II	B.P.
	CALTEX
	CASTROL
	MOBIL
	SHELL
	TEXACO

- **XT6**

Recommended fluid	
IDEMITSU	SPECIAL POWER STEERING FLUID [Parts No. K0209A0080]

Fluid capacity:
0.7ℓ (1.5 US pt, 1.2 Imp pt)

POWER STEERING FLUID FOR LEAKS

Inspect the underside of oil pump and gearbox for power steering system, hoses, piping and their couplings for fluid leaks.
If fluid leaks are found, correct them by retightening their fitting bolts (or nuts) and/or replacing their parts.

a. Wipe the leakage fluid off after correcting fluid leaks, or a wrong diagnosis is taken later.
b. Also pay attention to clearances between hoses (or pipings) and other parts when inspecting fluid leaks.

HOSES OF OIL PUMP FOR DAMAGES

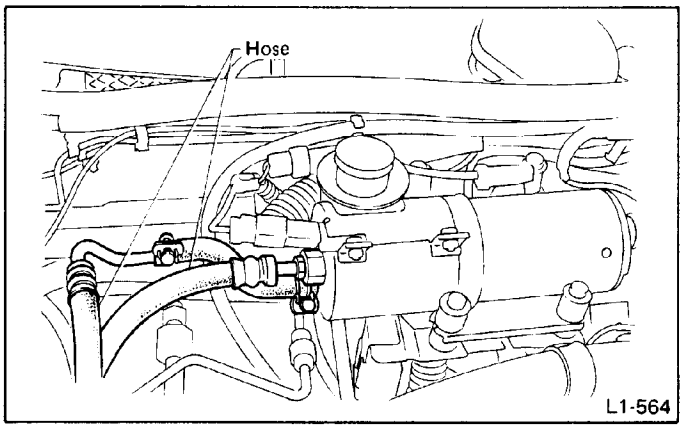

Fig. 63

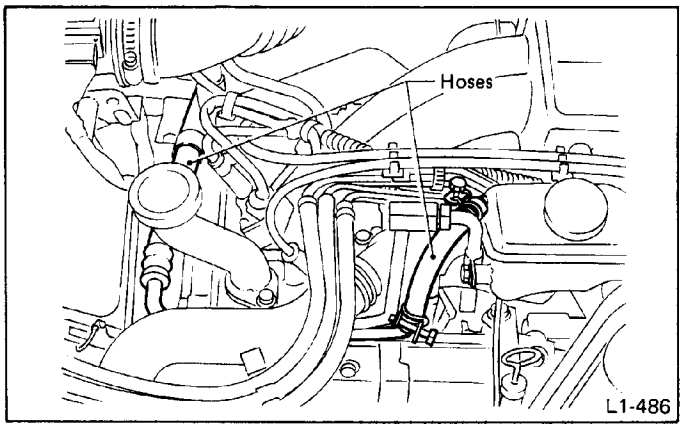

Fig. 64

Check pressure hose and return hose of oil pump for crack, swell or damage. Replace hose with new one if necessary.

Prevent hoses from revolving and/or turning when installing hoses.

GEARBOX BOOTS (Except XT6)

Inspect both sides of gearbox boots as follows, and correct the defects if necessary.

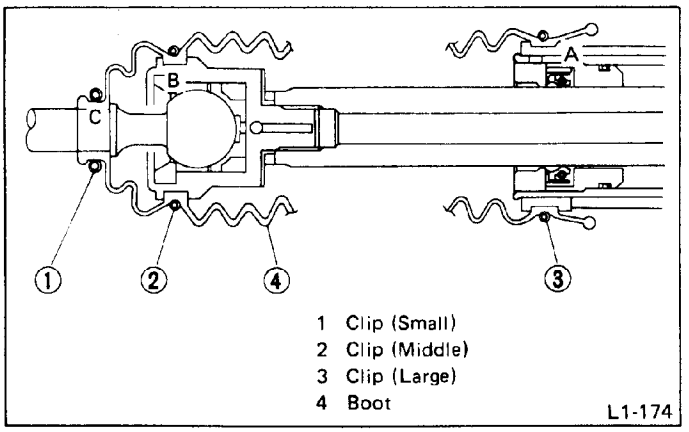

Fig. 65

1) A, B and C position of gearbox boot are fitted correspondingly in A, B and C grooves of gearbox and the rod.
2) Clips are fitted outside of A, B and C positions of boot.
3) Projection of boot is fitted in hole on A groove of gearbox to prevent boot rotating.
4) Boot does not have crack, hole.

Rotate B and C position of gearbox boot against twist of it produced by adjustment of toe-in, etc.
In this case, never rotate A position of gearbox boot.

GEARBOX BOOTS (XT6)

Inspect both sides of gear box boots as follows, and correct the defects if necessary.

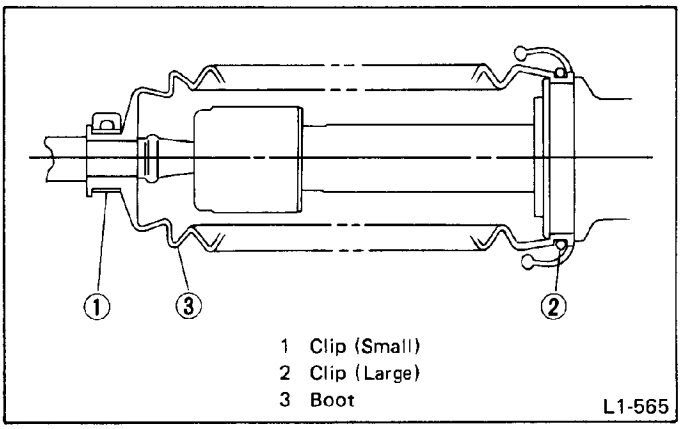

Fig. 66

1) A and B positions of gearbox boot are fitted correctly in A and B grooves of gearbox and rod.
2) Clips are fitted outside of A and B positions of boot.
3) Boot does not have cracks or holes.

Repair boot if twisted while adjusting toe-in.

FITTING BOLTS AND NUTS (Except XT6)

Inspect fitting bolts and nuts of oil pump and bracket for looseness, and retighten them if necessary.

Inspect and/or retighten them when engine is cold.

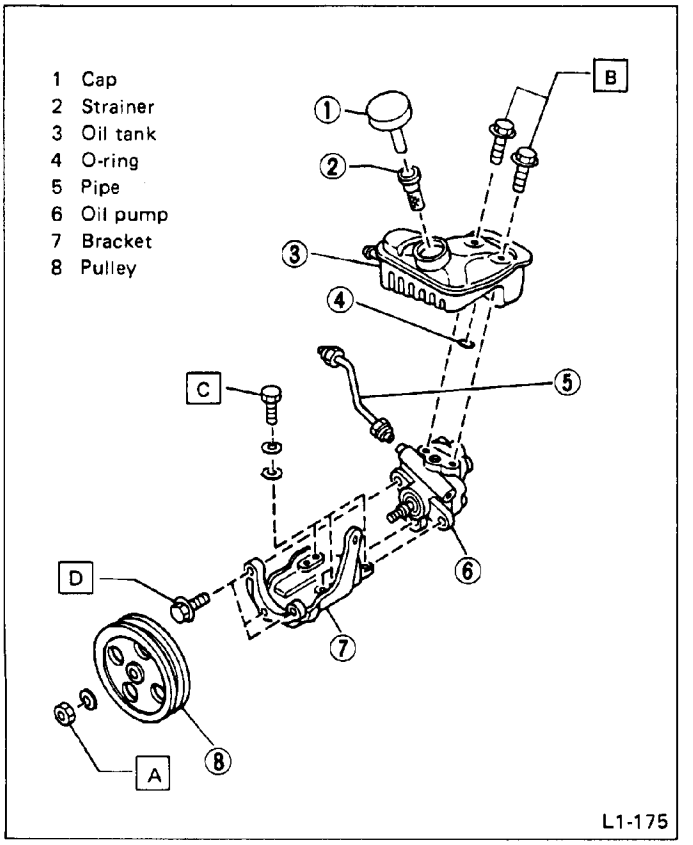

Fig. 67

Tightening torque:
- **Nut A (one):**
  - **42 – 62 N·m (4.3 – 6.3 kg-m, 31 – 46 ft-lb)**
- **Bolt B (two):**
  - **20 – 29 N·m (2.0 – 3.0 kg-m, 14 – 22 ft-lb)**
- **Bolt C (three):**
  - **18 – 22 N·m (1.8 – 2.2 kg-m, 13 – 16 ft-lb)**
- **Bolt D (three):**
  - **29 – 49 N·m (3.0 – 5.0 kg-m, 22 – 36 ft-lb)**

FITTING BOLTS AND NUTS (XT6)

Inspect fitting bolts and nuts of oil pump and bracket for looseness, and retighten them if necessary.

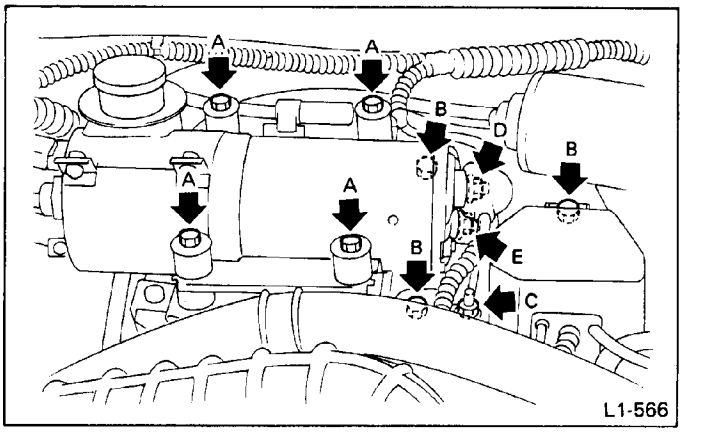

Fig. 68

Tightening torque:
- **Bolt A (four):**
  - **23 – 42 N·m (2.3 – 4.3 kg-m, 17 – 31 ft-lb)**
- **Bolt B:**
  - **23 – 37 N·m (2.3 – 3.8 kg-m, 17 – 27 ft-lb)**
- **Nut C:**
  - **4.4 – 7.4 N·m (0.45 – 0.75 kg-m, 3.3 – 5.4 ft-lb)**
- **Bolt D:**
  - **9.5 – 12.3 N·m (0.97 – 1.25 kg-m, 7.0 – 9.0 ft-lb)**
- **Bolt E (one):**
  - **3.9 – 5.1 N·m (0.40 – 0.52 kg-m, 2.9 – 3.8 ft-lb)**

SUSPENSION SYSTEM

Care should be taken not to apply paint, undercoating agent, anti-corrosive wax, etc. to the following parts of air-suspension equipped models while refinishing the undercarriage.

(1) Diaphragm and rolling surfaces

(2) Air suspension compressor and dryer assembly

1) Play of front ball joint ..... Inspect every 24,000 km (15,000 miles) or 15 months, whichever occurs first.

(1) Jack up vehicle until front wheels are off ground as instructed in "Pre-Delivery Inspection."

(2) Next, grasp bottom of tire and move it in and out. If relative movement is observed between brake disc cover and end of transverse link, ball joint may be excessively worn.

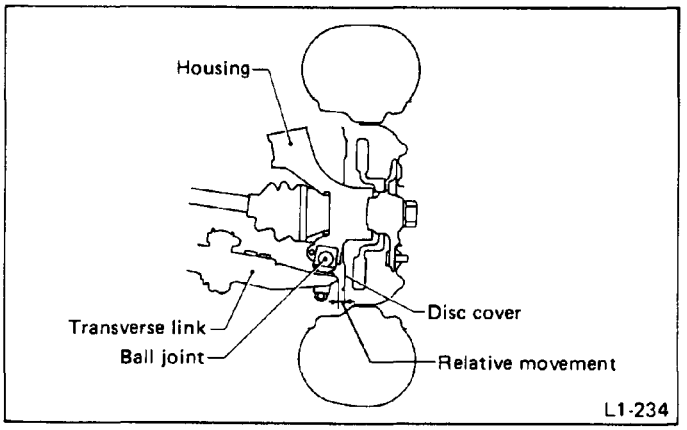

Fig. 69

(3) Next, grasp end of transverse link and move it up and down. Relative movement between housing and transverse link boss indicates ball joint may be excessively worn.

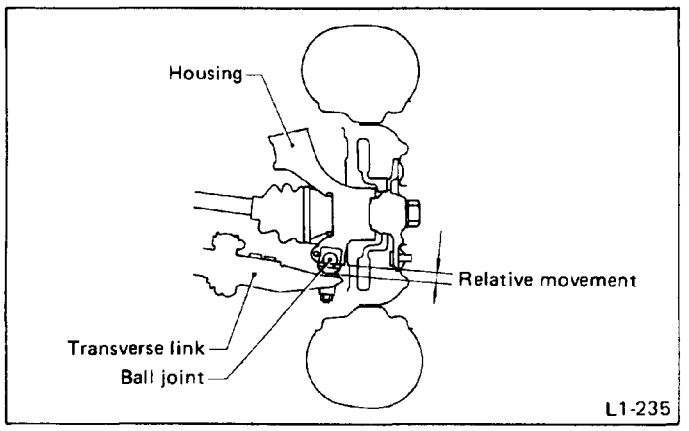

Fig. 70

(4) If relative movement is observed in tests (2) and (3) above, remove and inspect ball joint according to chapter 4-1. If looseness exceeds standard, replace ball joint.

2) Damage of dust seal ..... Inspect every 24,000 km (15,000 miles) or 15 months, whichever occurs first.

Visually inspect ball joint dust seal. If it is damaged, remove ball joint as instructed in chapter 4-1 and measure looseness of ball joint.

(1) When looseness exceeds standard value, replace ball joint.

(2) When looseness is less than standard value, wipe off old grease, apply the proper amount [about 3 g (0.11 oz)] of designated grease (SUNLIGHT 2, P/N 003602010), and install a new dust seal.

When transverse link ball joint has been removed or replaced, check toe-in (or side slip) of front wheel.
If front wheel toe-in (or side slip) is not at specified value, adjust according to chapter 4-1 so that toe-in conforms to service standard.

3) Wheel alignment and ground clearance ..... Inspect every 48,000 km (30,000 miles) or 30 months, whichever occurs first.

(1) Unload cargoes and set vehicle in curb weight (empty) condition.

(2) Then, check ground clearance of front and rear suspensions to ensure that they are within specified values.

(Adjusting procedure)

When ground clearance is out of standard, visually inspect following components and replace deformed parts.

- Suspensions components [Front: strut assembly, crossmember, transverse link, etc. Rear: shock absorber, inner arm, outer arm, etc.]
- Body parts to which suspensions are installed.

When no components are deformed, adjust ground clearance by replacing coil spring in the suspension whose ground clearance is out of standard.

(3) Check alignment of front suspension to ensure that following items conform to standard values provided in chapters 4-1 and 4-3.

- Toe-in (or side slip)
- Camber angle
- Caster angle
- Turning angle of tire

(Adjusting procedure)

(a) Camber and caster angles are not adjustable. When camber or caster angle does not conform to standard value, visually inspect following components and replace deformed parts.

- Suspension components [Strut assembly, crossmember, transverse link, etc.]
- Body parts to which suspensions are installed.

(b) When toe-in (or side slip) is out of standard value, adjust by the method described in chapter 4-1 so that it conforms to service standard.

(c) When right-and-left turning angles of tire are out of standard, adjust to standard value by method described in chapter 4-3.

(4) Check alignment of rear suspension to ensure that following items are within standard values.

- Toe-in (or side slip)
- Camber angle

(Adjusting procedure)

When toe (or side slip) or camber angle does not conform to standard value, visually inspect parts listed below. If deformation is observed, replace damaged parts.

- Suspension components [Shock absorber, inner arm, outer arm, crossmember, etc.]
- Body parts to which suspensions are installed.

When no components are deformed, adjust alignment as instructed below so that it conforms to service standard.

Toe

(a) Jack up rear of vehicle as shown in "Pre-Delivery Inspection," and remove rear wheels.

(b) Loosen outer arm mounting bolts.

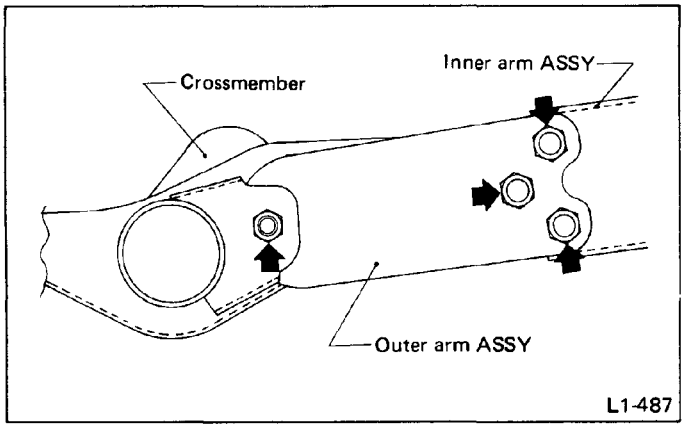

Fig. 71

(c) When toe-in (or side slip) is excessive, tighten outer arm mounting bolts shown in Fig. 71 while pulling end of spindle towards rear of vehicle (in direction of arrow in Fig. 72). When toe-out (or side slip) is excessive, tighten outer arm mounting bolts while pushing end of spindle toward front of vehicle (in opposite direction of arrow in Fig. 72).

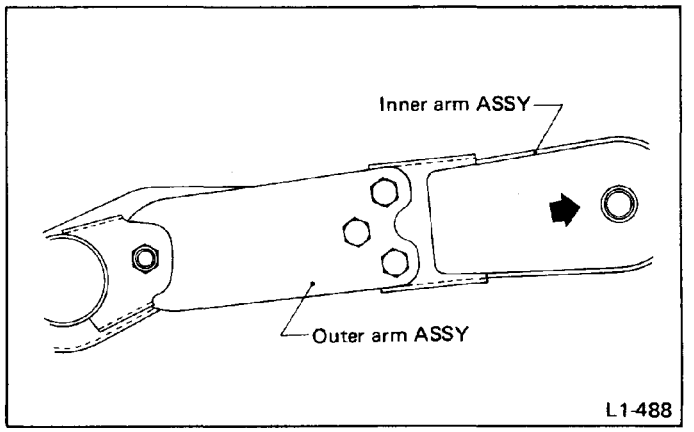

Fig. 72

(d) Adjust toe within service standard by repeating steps in 2) and 3) above for for both right and left wheels.

Camber angle

(a) Jack up rear of vehicle as shown in "Pre-Delivery Inspection," and remove wheel whose camber angle is out of standard.

(b) Remove bolt linking lower end of shock absorber to inner arm.

(c) Then, loosen outer arm mounting bolts shown in Fig. 5.

(d) If camber angle is excessive in ⊕ direction, use a piece of wood as a lever and change relative angle between inner arm and outer arm so that angle θ formed by inner arm and outer arm centerlines (Fig. 73) increases. Then, tighten outer arm mounting bolts.

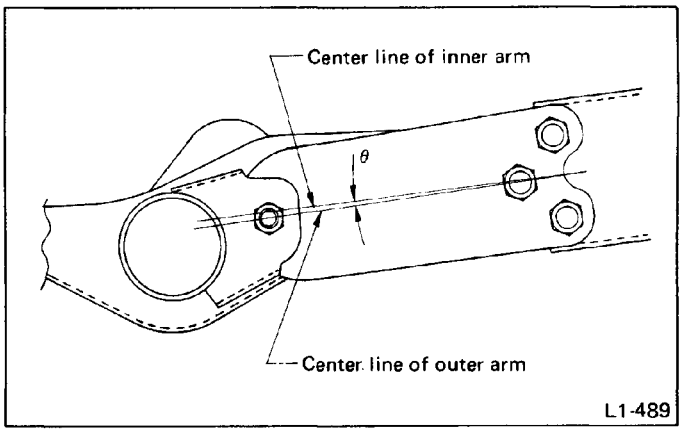

Fig. 73

(e) If camber angle is excessive in ⊖ direction, use a piece of wood as a lever and change relative angle between inner and outer arms so that angle θ formed by inner arm and outer arm centerlines decreases. Then, tighten outer arm mounting bolts.

(f) Adjust camber angle to conform to service standard by repeating steps 4) and 5) above.

a. Adjusting toe (or side slip) results in a change in camber angle, while adjusting camber angle causes a change of toe (or side slip). Therefore, when either is adjusted, always check that the other remains within service standard.

b. After both toe (or side slip) and camber angle have been adjusted within service standard, be sure to tighten bolts to torque specified in chapter 4-1.

4) Oil leakage of shock absorber . . . . . Inspect every 48,000 km (30,000 miles) or 30 months, whichever occurs first.

Remove tire and visually inspect shock absorber for oil leakage as instructed in chapter 4-1. Replace shock absorber if oil leaks excessively.

5) Tightness of bolts and nuts . . . . . Inspect every 48,000 km (30,000 miles) or 30 months, whichever occurs first.

Check bolts shown in Figs. 74, 75 and 76 for looseness. Retighten bolts to specified torque. Further, check that cotter pin is in place as shown in Figs. 74 and 75. If not, install a new cotter pin.

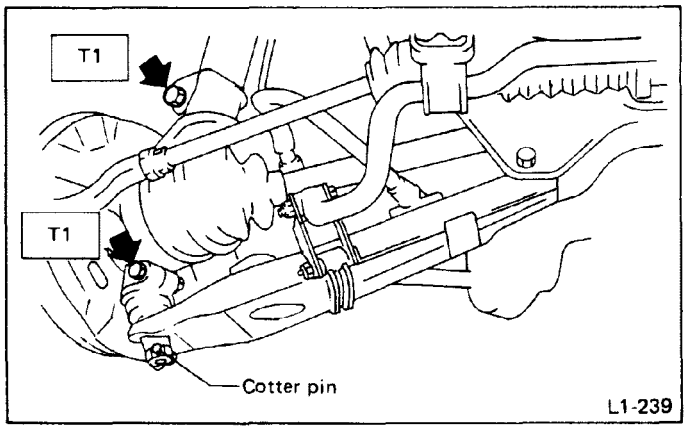

Fig. 74 Front suspension (Except XT6)

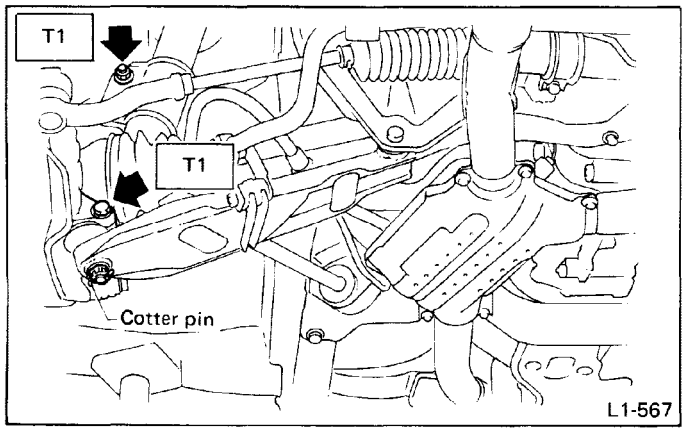

Fig. 75 Front suspension (XT6)

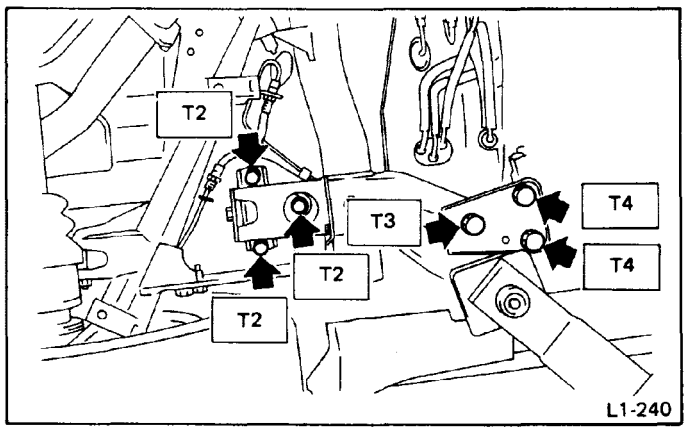

Fig. 76 Rear suspension

Tightening torque N·m (kg-m, ft-lb):
T1: 38 – 50 (3.9 – 5.1, 28 – 37) (Except XT6)
64 – 83 (6.5 – 8.5, 47 – 61) (XT6)
T2: 88 – 103 (9.0 – 10.5, 65 – 76)
T3: 118 – 147 (12.0 – 15.0, 87 – 108)
T4: 74 – 88 (7.5 – 9.0, 54 – 65)

6) Dirt on and damage to rolling diaphragm . . . . . Inspect every 24,000 km (15,000 miles) or 15 months, whichever occurs first.

(1) After loosening wheel nuts, jack up vehicle until all four wheels are off ground according to instructions in "Pre-Delivery Inspection." Remove tires.

(2) Visually inspect rolling diaphragm. If dirty, remove dirt from diaphragm. Be careful not to damage diaphragms.

(3) Visually inspect rolling diaphragm. Replace diaphragm if damaged. However, replacement is not required if only fine scratches on diaphragm surface caused by sand. These do not present a problem.

(4) Visually inspect rolling diaphragm for rust. If rusty, remove rust and touch up.

When touching up diaphragm, be careful paint does not adhere to diaphragm. (Lower jack after touch-up paint has dried completely.)

17 Grease on Front and Rear Wheel Bearings

MAINTENANCE INTERVAL [Number of months or km (miles), whichever occurs first]								
Months	7.5	15	22.5	30	37.5	45	52.5	60
x 1,000 km	12	24	36	48	60	72	84	96
x 1,000 miles	7.5	15	22.5	30	37.5	45	52.5	60
								(I)

INSPECTION

Inspect the condition of front and rear wheel bearing grease as follows:

FRONT WHEEL BEARING (Except XT6)

1) Raise front wheel with a jack, and remove wheel. Remove cotter pin from axle shaft and remove castle nut.
2) Remove hub & disc ASSY.
3) Remove oil seal from housing, and check the condition of bearing grease.

a. If either the grease appears to be white or if only a small amount of grease remains, remove the bearing from the housing, clean it, and pack it with grease.
b. Discard the old seal and install a new one.

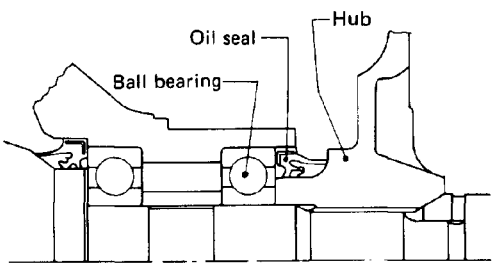

Fig. 77

4) Installation is in the reverse order of removal.

Tightening torque (Castle nut):
196 N·m (20 kg-m, 145 ft-lb)

After tightening the castle nut to the specified torque, tighten additionally in one sixth (1/6) turn until both holes of bolt and castle nut align each other.

Tightening torque (Hub to disc rotor bolts):
44 – 58 N·m (4.5 – 5.9 kg-m, 33 – 43 ft-lb)

FRONT WHEEL BEARING (XT6)

1) Jack up the front of vehicle.
2) While holding front wheel by hand, swing it in and out to check bearing free play.
3) Loosen wheel nuts and remove front wheel.
4) If bearing free play exists in step 2) above, attach a dial gauge to hub and measure axial displacement in axial direction.

Service limit:
Straight-ahead position within 0.05 mm (0.0020 in)

5) Remove bolts and self-locking nuts, and extract transverse link from front crossmember.
6) While lightly hammering spring pin which secures D.O.J. to transmission spindle, remove it.
7) Extract D.O.J. from transmission spindle.
8) While supporting front drive shaft horizontally with one hand, turn hub with the other to check for noise or binding.
If hub is noisy or binds, disassemble front axle and check condition of oil seals, bearings, etc.

REAR WHEEL BEARING [Except 4WD vehicle]

1) Apply parking brake, and loosen rear wheel nuts.
2) Jack up vehicle, support it with safety stands (rigid racks) and remove rear tires and wheels.
3) Pry brake drum cap by screwdriver off drum.
4) Flatten lock washer and loosen axle nut, then remove lock washer, lock plate and brake drum so as not to drop inner race of outer taper roller bearing.
Outer bearing, outer race of inner bearing and oil seal can be removed together with drum.
5) Check condition of bearing grease.

a. If either the grease appears to be white or if only a small amount of grease remains, remove the bearing from the housing, clean it, and pack it with grease.
b. Discard the old seal and install a new one.

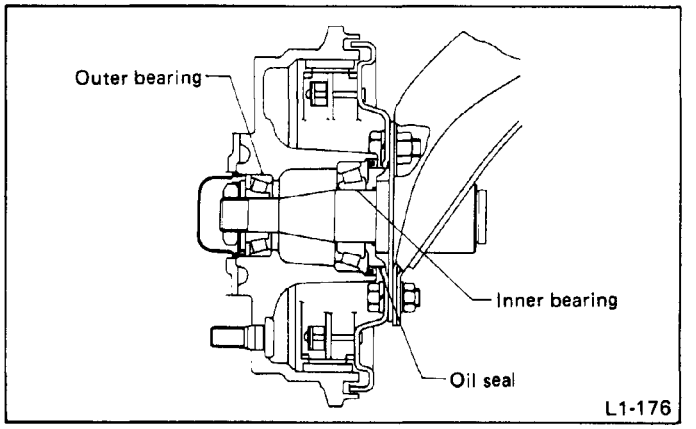

Fig. 78

6) Apply approximately 4 g (0.14 oz) of grease to inner bearing and 3 g (0.11 oz) to outer bearing.
Fill the hub of drum with approximately 30 g (1.06 oz) of grease.
7) Install drum, inner race of outer bearing, lock plate, lock washer and axle nut in this order onto the spindle.

Be sure to use new lock plate and new lock washer without fail.

REAR WHEEL BEARING [4WD vehicle]

1) Apply parking brake.
2) Remove rear wheel cap and cotter pin, and loosen castle nut and wheel nuts.
3) Detach shock absorber from inner trailing arm.
4) Loosen locking bolts of crossmember outer bushing.
5) Jack up vehicle, support it with safety stand (rigid racks) and remove rear tires and wheels.
6) Remove castle nut and brake drum.
7) Drive out spring pins of BJ and D.O.J. by using a steel rod of 6 mm diameter.
8) Remove BJ from spindle of trailing arm with trailing arm lowered fully.
9) Remove rear exhaust pipe, muffler and exhaust cover in that order.
10) Disconnect brake pipe from brake hose.

Fit air breather cap onto end of brake hose to prevent brake fluid from pouring out.

11) Remove brake assembly from trailing arm.
12) Remove bolt holding inner bushing of inner trailing arm.
13) Remove three bolts, and take out inner arm.
14) Vise inner arm, and straighten staked portion of housing, then remove ring nut by using HOUSING NUT WRENCH (Special tool).

Tool No.	Tool name
925550000	HOUSING NUT WRENCH

15) Extract spindle inwardly by tapping it from outside with a plastic hammer.
16) Remove oil seal.
17) Check condition of bearing grease.

a. If either the grease appears to be white or if only a small amount of grease remains, remove the bearing from the housing, clean it, and pack it with grease.
b. Discard the old seal and install a new one.

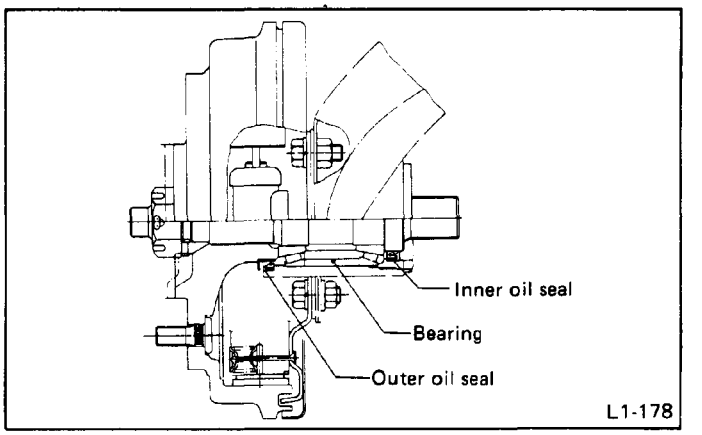

Fig. 79

18) Apply grease of 20 to 30 g (0.71 to 1.06 oz) to bearing outer race in housing.
19) Insert spindle from inside, and press inner race of outer bearing from outside by using a pipe of 35 mm (1.38 in) in inner diameter while tapping it with a hammer.

Apply grease sufficiently on the inner and outer bearing area.

20) Install ring nut to housing.

Tightening torque:
172 – 221 N·m (17.5 – 22.5 kg-m, 127 – 163 ft-lb)

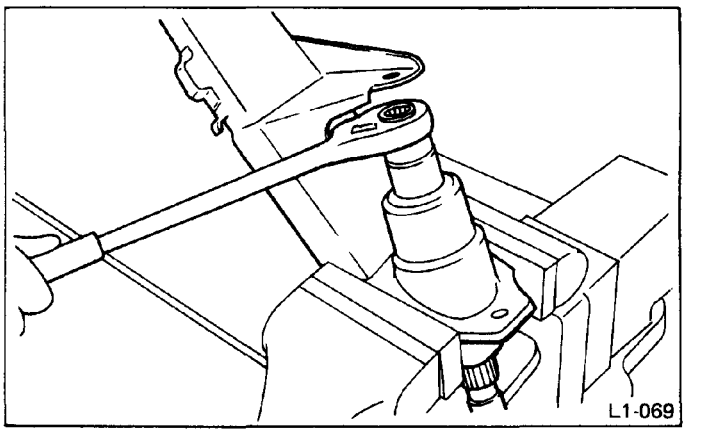

Fig. 80

21) Lock the ring nut by staking a point on the housing surface facing the ring nut groove.

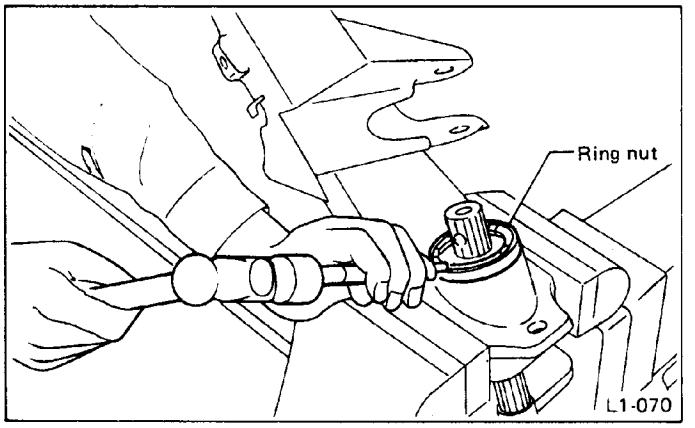

Fig. 81

22) Install outer oil seal by using OIL SEAL INSTALLER (Special tool).

Tool No.	Tool name
925530000	OIL SEAL INSTALLER

Be sure to renew the oil seal.

23) Install inner oil seal by using OIL SEAL INSTALLER (Special tool).

Be sure to renew the oil seal.

24) Mount inner arm to vehicle body.

Tightening torque:
Inner bush bolt:
74 – 93 N·m (7.5 – 9.5 kg-m, 54 – 69 ft-lb)
Inner and outer arms connecting bolts:
118 – 147 N·m
(12.0 – 15.0 kg-m, 87 – 108 ft-lb)

25) Install rear brake assembly to inner arm, and connect brake pipes etc.

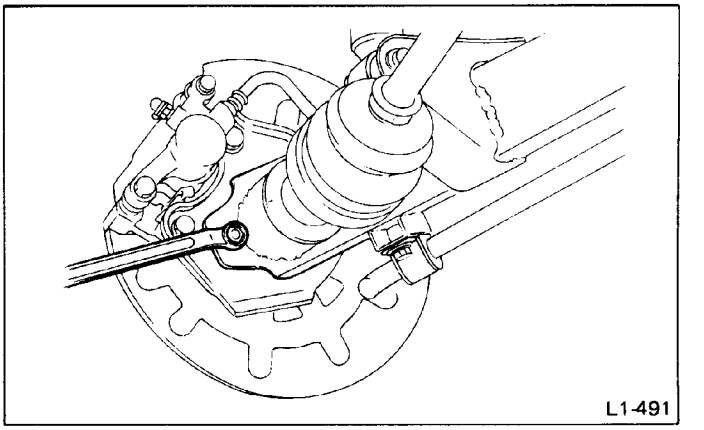

Fig. 82

Tightening torque (Back plate):
46 – 58 N·m (4.7 – 5.9 kg-m, 34 – 43 ft-lb)

26) Connect brake hose and brake pipe.

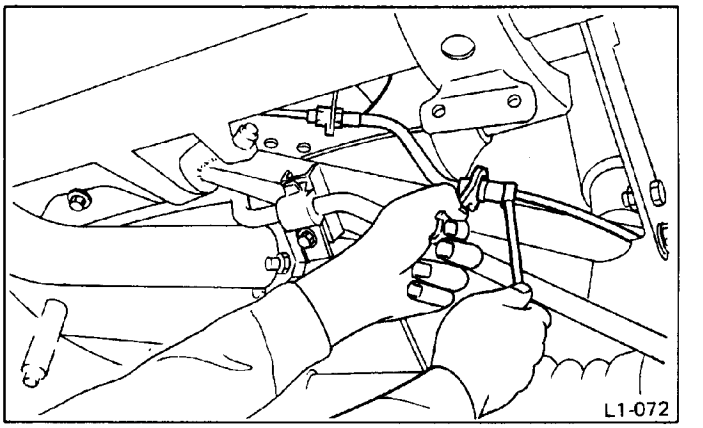

Fig. 83

27) Temporarily fit brake drum, center piece, washer spring and castle nut to spindle in this order.

a. Play on spindle is not a fault when mounting brake drum.
b. Don't confuse orientation of washer spring.

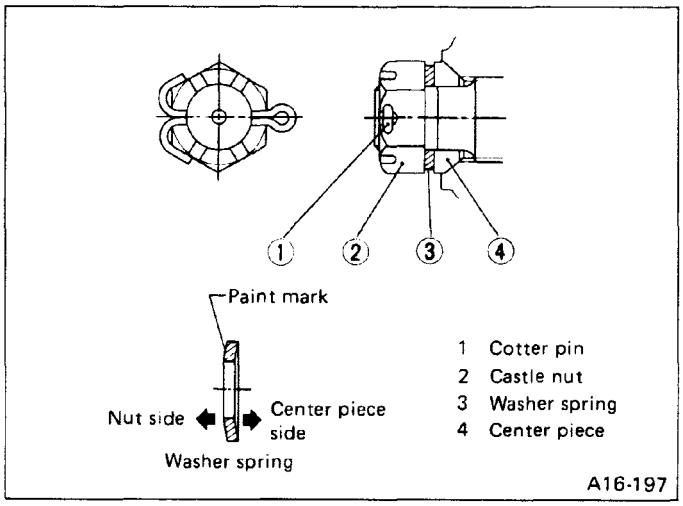

Fig. 84

28) Bleed brake system.

a. Before bleeding brake system, check pedal play and brake fluid level in reserve tank.
b. Bleed air from four wheels without fail.

29) Tighten castle nut, insert cotter pin and bend it firmly with foot brake applied to lock the wheel and axle.

Tightening torque:
196 N·m (20 kg-m, 145 ft-lb)

After tightening castle nut to the specified torque tighten further within 30° to align holes on nut and spindle.

30) Install packing to rear spindle, and mount D.O.J. or B.J. on rear drive shaft onto spindle with trailing arm lowered all the way.

When mounting, mate the spline teeth properly so that the D.O.J. or B.J. and spindle spring pin hole will align.

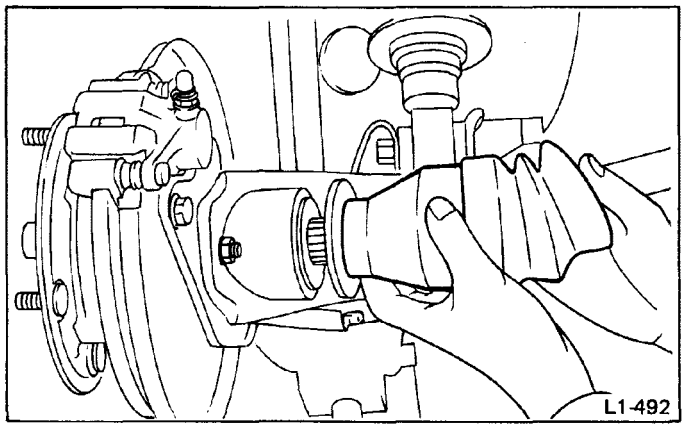

Fig. 85

31) Drive spring pins into D.O.J.

a. Before driving in the spring pin, confirm alignment of the holes.
b. Be sure to renew the spring pin to be driven in.

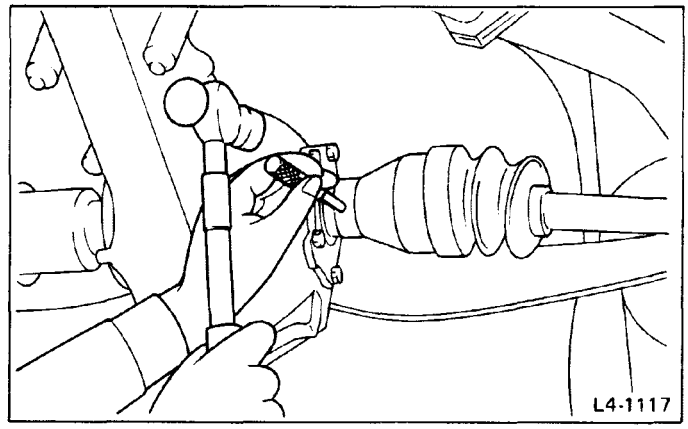

Fig. 86

32) Install wheels, outer arms, etc.
33) Lower vehicle on the ground, and install lower end of shock absorber.

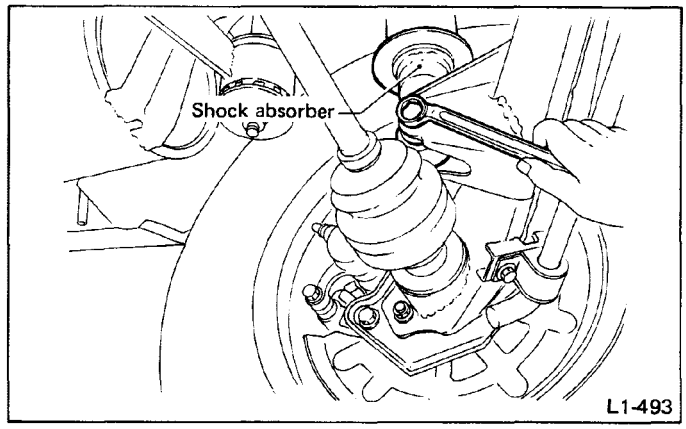

Fig. 87

Tightening torque:
88 – 118 N·m (9 – 12 kg-m, 65 – 87 ft-lb)

34) Check and adjust rear vehicle height and rear wheel alignment.
35) Tighten outer arm lock bolts.

For disc brake vehicle, inspect it in the same manner as drum brakes one.

SUBARU

1988

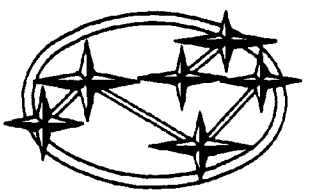

Page

ENGINE TOOLS 2
MANUAL TRANSMISSION AND DIFFERENTIAL TOOLS 4
AUTOMATIC TRANSMISSION AND DIFFERENTIAL TOOLS 9
REAR WHEEL DRIVE SYSTEM (4WD MODELS) TOOLS 11
SUSPENSION TOOLS 13
WHEELS AND AXLES TOOLS 14
STEERING SYSTEM TOOLS 16
BRAKES TOOLS 19
AIR CONDITIONING SYSTEM TOOLS 20
BODY TOOLS 21

Engine Tools

398744300	398852100	399094310	399284300
PISTON GUIDE	OIL SEAL INSTALLER	PISTON PIN REMOVER ASSY	PISTON PIN GUIDE
Used to install piston in cylinder.	For press-fitting of intake and exhaust valve guide oil seals.	Used to remove piston pins by inserting this tool through crankcase plug holes. 1800 cc model	Used to install piston pin in piston and connecting rod. 1800 cc model
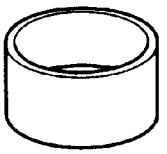 A5-155	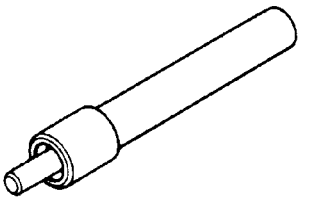 ST-054	A5-143	A5-156
399762103	399762104	498027000	498037000
VALVE GUIDE REMOVER	VALVE GUIDE REAMER	CAMSHAFT HOLDER	INSTALLER
For removing of valve guide.	For reaming of valve guide.	Used to hold camshaft when press-fitting distributor gear to camshaft.	Used to install camshaft oil seal.
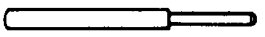 A5-147	A5-150	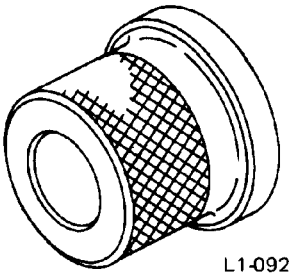 L1-092	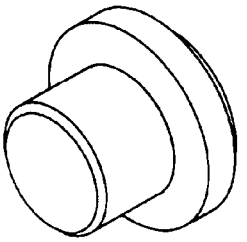 L1-093
498267100	498277000	498497000	499007000
CYLINDER HEAD TABLE	FLYWHEEL STOPPER CP	DRIVE PLATE STOPPER	TENSIONER WRENCH
For replacing of valve guide.	Used to stop rotation of flywheel when loosening and tightening crankshaft pulley bolt, etc. Manual transmission vehicle	Used to stop rotation of drive plate when loosening and tightening crankshaft pulley bolt, etc. Automatic transmission vehicle	Used to hold up tensioner No. 2 when reducing timing belt tension. 1800 cc model
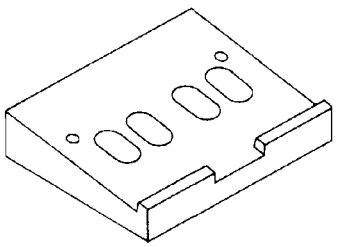 L1-094	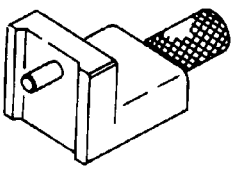 L1-095	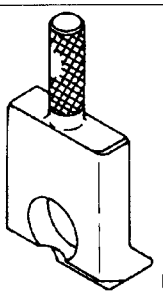 L1-096	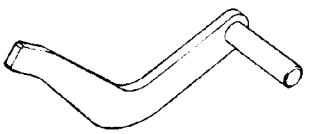 L1-276

* 499017000	499037000	* 499097300	49920700
PISTON PIN GUIDE	REMOVER & REPLACER	PISTON PIN REMOVER ASSY	CAMSHAFT SPROCKET WRENCH
Used to install piston pin in piston and connecting rod.	Connecting rod bushing	Used to remove pins by inserting through crank-case plug holes.	Used to remove and install camshaft sprocket. 1800 cc model
A5-156	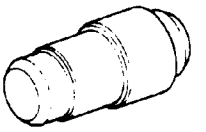 A5-389	A5-143	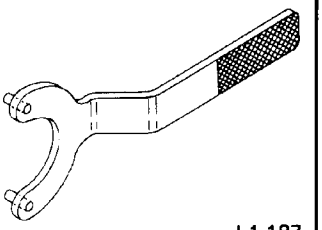 L1-187
499437000	* 499437100	499567000	* 499567100
BELT TENSION WRENCH CP	BELT TENSION WRENCH CP	INSTALLER	INSTALLER
When installing timing belt, used to apply the specified torque to camshaft pulley so as to get the specified belt tension. 1800 cc model	When installing timing belt, used to apply the specified torque to camshaft pulley so as to get the specified belt tension. 2700 cc model	Used to install crankcase front oil seal. 1800 cc model	Used to install crankcase front oil seal.
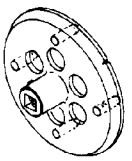 L1-188	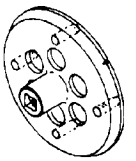 L1-188	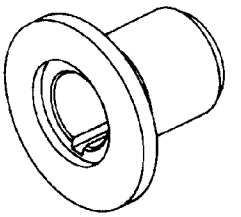 L1-100	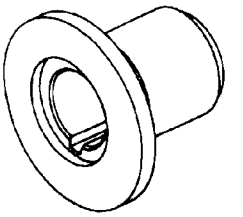 L1-100
499587000	* 499817100	499987200	499990110
INSTALLER	ENGINE STAND	SOCKET WRENCH (17)	SOCKET
Used to install crankcase rear oil.	Stand used for engine disassembly and assembly. Two pieces are needed. This tool can be made by modifying the former one (499817000).	For retightening cylinder head. 1800 cc model	Oxygen (O_2) sensor.
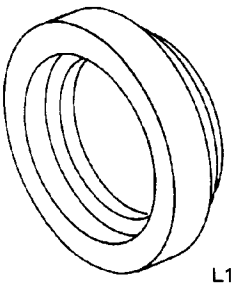 L1-101	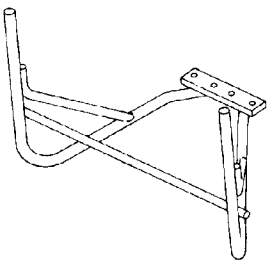 L1-102	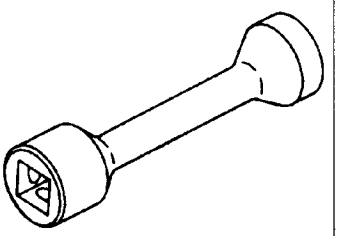 L1-103	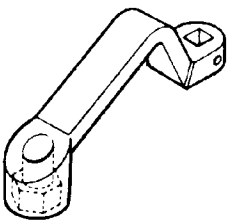 A10-133

* Newly adopted tool

899724100	899768603	* 13082AA000
VALVE SPRING PRESS ASSY	VALVE GUIDE ADJUSTER	BELT ADJUSTER STOPPER
Used to remove and install valve spring.	Used to install intake and exhaust valve guides.	Used to compress belt tensioner rubber boot (of adjuster COMPL) for easy installation of belt. 2700 cc model
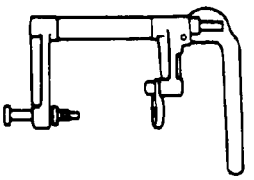 A5-149	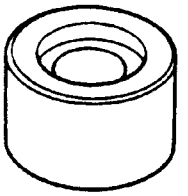 A5-149	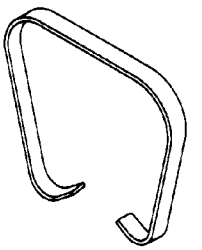 L1-568

* Newly adopted tool

Manual Transmission and Differential Tools

398405200	398791600	398791700	399295120
STAND	REMOVER II	REMOVER II	STAND SET
Rear drive shaft. 4WD	Straight pin (Transfer shifter fork).	Spring pin (5-speed)	Transmission main case.
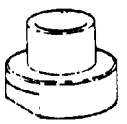 ST-144	 A12-174	 A12-174	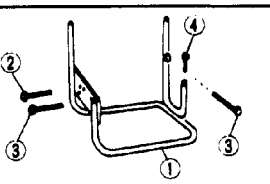 1 STAND CP (399935120) 2 BOLT (016510600) ... 10 x 60 mm 3 BOLT (016510700) ... 10 x 70 mm 4 BOLT (016510400) ... 10 x 40 mm ST-169

399411700	399513600	399520105	399527700
INSTALLER	INSTALLER	SEAT	PULLER SET
Reverse shifter rail arm.	Extension rear oil seal. 4WD	Roller bearing (Differential). FWD	Roller bearing (Differential). 4WD
A12-170	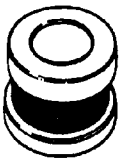 A13-196	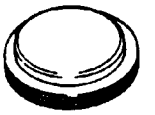 A12-171	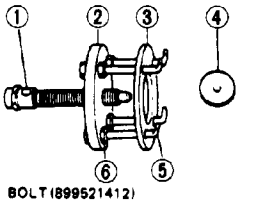 1 BOLT (899521412) 2 PULLER (399527702) 3 HOLDER (399527703) 4 ADAPTER (398497701) 5 BOLT (899520107) 6 NUT (021008000) A14-075
399780104	399790110	498057000	498067000
WEIGHT	INSTALLER	OIL SEAL INSTALLER	TRANSFER RACE PRESS
Preload on roller bearing.	Roller bearing, (Differential) Axle shaft oil seal. FWD	Transfer case oil seal. 4WD	Transfer race. 4WD
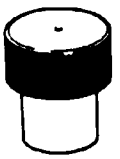 A12-172	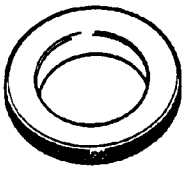 A12-175	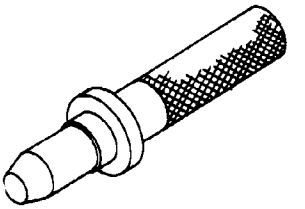 L1-105	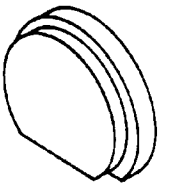 L1-108
498077000	498147000	498247001	498247100
5TH DRIVE GEAR REMOVER	DEPTH GAUGE	MAGNET BASE	DIAL GAUGE
5th driven gear. 4WD	Main shaft axial end play adjustment	Backlash between side gear and pinion, Hypoid gear backlash.	Backlash between side gear and pinion, Hypoid gear backlash.
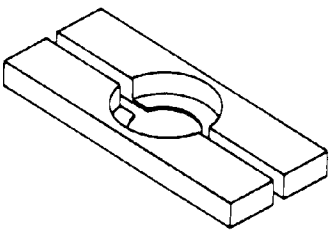 L1-109	ST-146	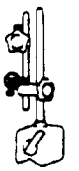 ST-156	ST-157

498427000	498517000	498787000	498787100
STOPPER	REPLACER	STOPPER	MAIN SHAFT STOPPER
For securing the drive pinion shaft ASSY and driven gear ASSY when removing the drive pinion shaft ASSY lock nut (18 x 13.5). 4WD	Drive pinion thrust plate and needle bearing race. FWD	Transmission main shaft. FWD	Transmission main shaft. 4WD
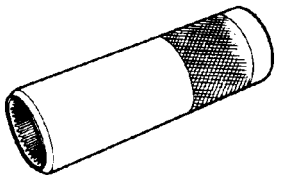 L1-388	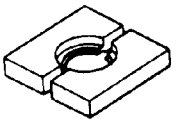 ST-151	A12-173	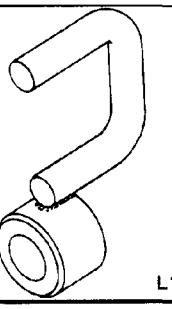 L1-110
498937000	**499277000**	**499277100**	**499277200**
TRANSMISSION HOLDER	INSTALLER	BUSH 1–2 INSTALLER	INSTALLER
Transmission main shaft lock nut. 4WD	Drive pinion. FWD	1st driven gear thrust plate. 1st–2nd driven gear bush. 4WD	For press fitting the 2nd driven gear, roller bearings, & 5th driven gear onto the driven shaft. 4WD
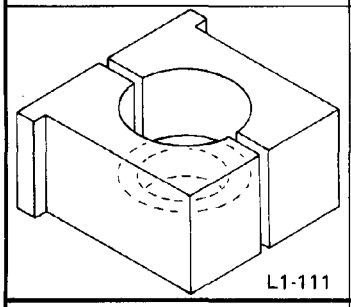 L1-111	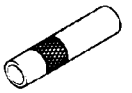 A12-296	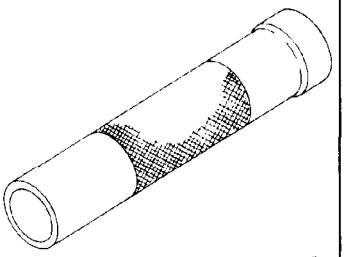 L1-113	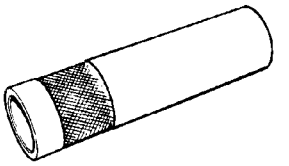 L1-391
499747000	**499747100**	**499787000**	**499797000**
GUIDE	CLUTCH DISC GUIDE	WRENCH ASSY	OIL SEAL INSTALLER
Clutch disc. FWD	Clutch disc. 4WD	Differential side retainer.	Differential side retainer oil seal. 4WD
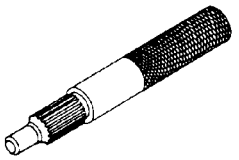 ST-170	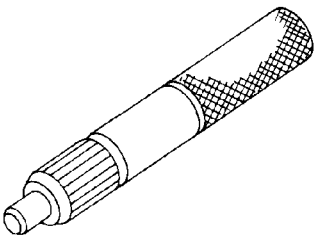 L1-114	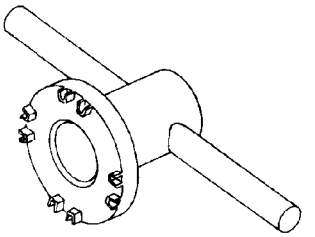 L1-117	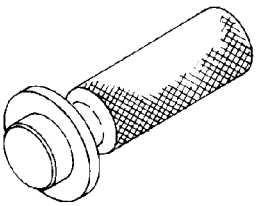 L1-118

499827000	499857000	499877000	499917100
PRESS	REMOVER ASSY	RACE 4–5 INSTALLER	GAUGE ASSY 2
Oil seal (Speedometer).	To remove the driven gear ASSY 5th gear. 4WD	Needle bearing 4th and 5th races. Transmission main shaft rear ball bearing. 4WD	Drive pinion shim. FWD
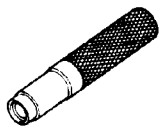 ST-147	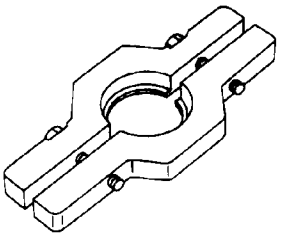 L1-569	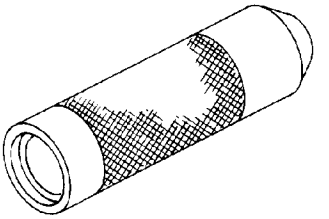 L1-119	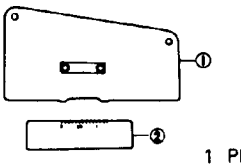 1 Plate 2 Scale A12-188

499917500	499927000	499927100	499987300
DRIVE PINION GAUGE ASSY	HANDLE	HANDLE	SOCKET WRENCH (50)
Drive pinion shim adjustment. 4WD	Transmission main shaft. FWD	Transmission main shaft. 4WD	To remove the driven gear ASSY lock nut. 4WD
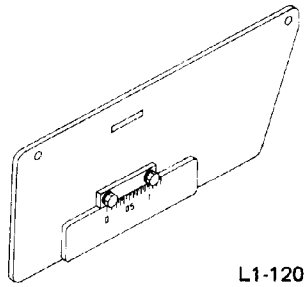 L1-120	A12-189	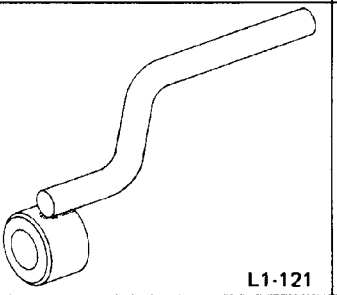 L1-121	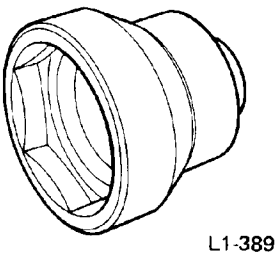 L1-389

898938600	899474100	899524100	899580100
HOLDER	EXPANDER	PULLER SET	INSTALLER
Transmission main shaft. FWD	Snap ring (Transmission main shaft). 4WD	Roller bearing (Differential). FWD	Transmission main shaft Drive pinion, Ball bearing (Rear drive shaft).
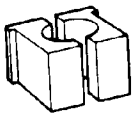 A12-176	A12-178	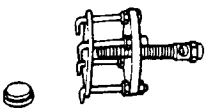 A5-142	A12-179

899714110	899754110	899754112	899858600
RETAINER	PRESS ASSY	PRESS	RETAINER II
Transmission main shaft, Drive pinion, Rear drive shaft.	Transmission main shaft, Needle bearing (transfer case), Rear drive shaft 4WD	Clutch release bearing holder. (Except 4WD) FWD	Transmission main shaft, Drive pinion. FWD
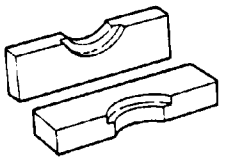 A12-181	 A12-182	 A11-025	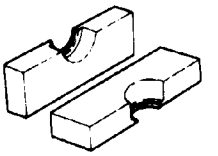 A12-183

899864100	899874100	899884100	899904100
REMOVER	INSTALLER	HOLDER	REMOVER
Transmission main shaft, Drive pinion.	Transmission main shaft, Drive pinion, Transfer drive gear bushing.	Drive pinion, Rear drive shaft, Extension ASSY	Straight pin (Differential)
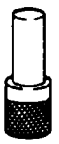 A12-184	 A12-185	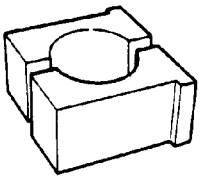 A12-186	 A12-187

899988608
SOCKET WRENCH (27)
Transmission main shaft (FWD) Rear drive shaft (4WD)
 A12-191

Automatic Transmission and Differential Tools

398437700	398573600	398603610	398643600
DRIFT	OIL PRESSURE GAUGE ASSY	SOCKET	GAUGE
Front oil seal for converter case.	Oil pressure.	Brake band.	Used to adjust drive pinion. • Oil pump clearance • Total end play
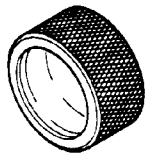 A14-046	A13-201	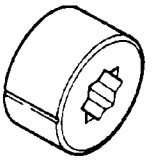 A13-209	A13-211
398673600	399520105	399703600	399780111
COMPRESSOR	SEAT	PULLER	WRENCH
Snap ring for clutch piston retainer.	Roller bearing (Differential)	• Used to install band servo piston to case. • Used with COMPRESSOR (498677000).	Axle shaft oil seal holder.
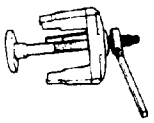 A13-208	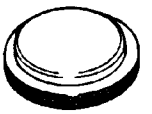 A12-171	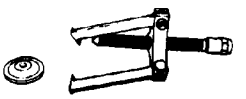 A13-186	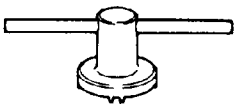 A12-168
399790110	399893600	498247001	498247100
INSTALLER	PLIER	MAGNET BASE	DIAL GAUGE
Roller bearing (Differential)	Snap ring for spring retainer.	Backlash of gears.	Backlash of gears.
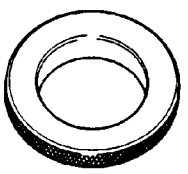 A12-175	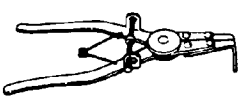 A13-207	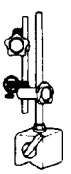 ST-156	ST-157

498517000	498627000	498627100	498677000
REPLACER	SEAT	SEAT	COMPRESSOR
Drive pinion front roller bearing.	Snap ring for clutch piston spring retainer.	Used to hold overrunning clutch piston retainer (return spring) when installing snap ring. 4AT	Band servo piston. 4AT
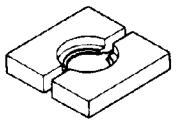 ST-151	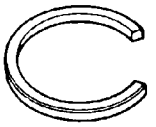 A13-210	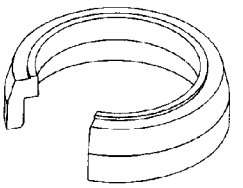 L1-502	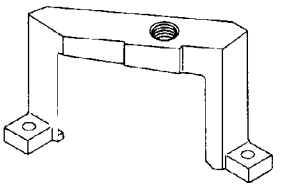 L1-503
498897100	498937100	499095500	499247300
ADAPTER CP	HOLDER	REMOVER ASSY	INSTALLER
Used when checking oil pressure, etc. 4AT	• Used to tighten/loosen M30 lock nut for drive pinion. • Used when measuring tooth contact pattern. 4AT	• Used to extract axle drive shaft from differential ASSY. • Used with INSTALLER (499247300) 4AT	Drive pinion oil seal. 4AT
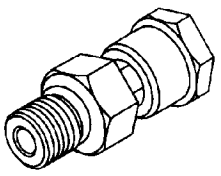 L1-504	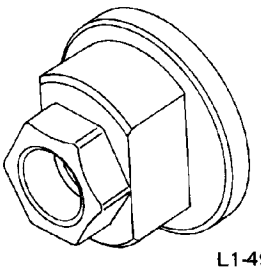 L1-498	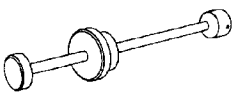 L1-499	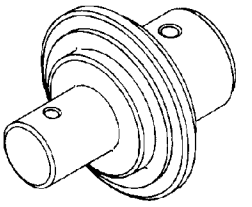 L1-500
499267300	499577000	499787100	499787300
STOPPER PIN	GAUGE	WRENCH ASSY	WRENCH
Used to align range selector lever/inhibitor switch. 4AT	Transfer end play. 4AT	• Used to tighten/loosen M30 lock nut for drive pinion. • Used when measuring hypoid gear backlash. 4AT	Manual shaft. 4AT
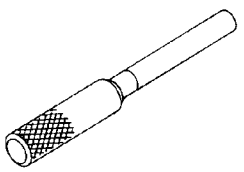 L1-508	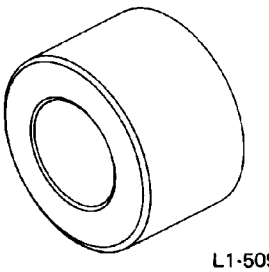 L1-509	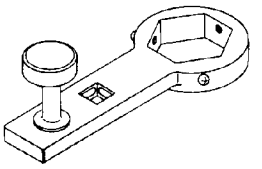 L1-501	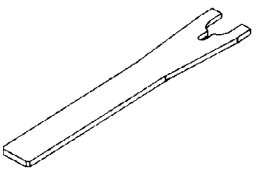 L1-510

499827000	499897000	899524100	899580100
PRESS	PLIERS	PULLER SET	INSTALLER
Speedometer shaft oil seal.	Snap ring.	Reduction driven gear.	Ball bearing for rear drive shaft.
ST-147	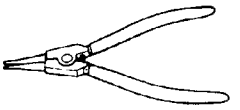 A13-519	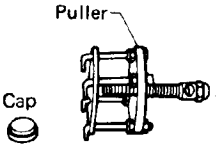 A5-142	A12-179

Rear Wheel Drive System (4WD Models) Tools

397471600	398177700	398217700	398227700
HANDLE & DRIFT KIT	INSTALLER	ATTACHMENT SET	WEIGHT
Front and rear bearing cup.	Rear bearing cone.	Differential case.	Side bearing.
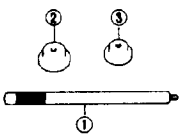 1 HANDLE (398477701) 2 DRIFT (398477702) 3 DRIFT 2 (398477703) ST-143	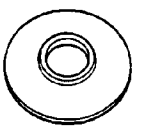 A14-085	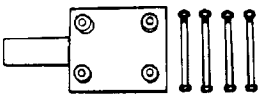 A14-084	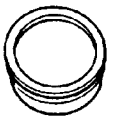 A14-087
398237700	398417700	398427700	398437700
GAUGE	DRIFT	FLANGE WRENCH	DRIFT
Side bearing.	Oil seal.	Companion Flange	Oil seal.
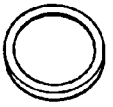 A14-086	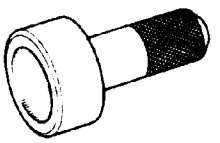 A14-045	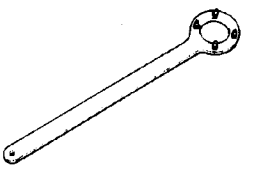 A14-043	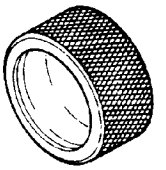 A14-046

398457700	398467700	398487700	398507701
ATTACHMENT	DRIFT	DRIFT	GAUGE
Side bearing retainer.	Drive pinion, Pilot bearing, Front bearing cone.	Side bearing cone.	Pinion height adjustment.
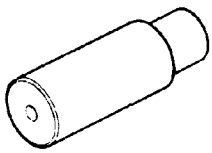 A14-047	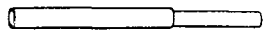 A14-049	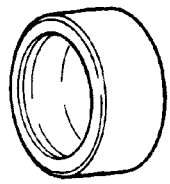 A14-088	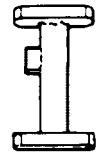 A14-080
398507702	398507703	398507704	398517700
DUMMY SHAFT	DUMMY COLLAR	BLOCK	REPLACER
Pinion height and Preload adjustment.	Pinion height and Preload adjustment.	Pinion height and Preload adjustment.	Rear bearing cone.
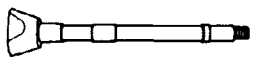 A14-081	A14-082	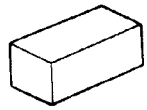 A14-083	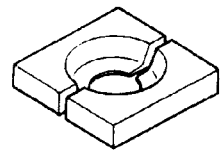 A14-076
398527700	399527700	399780104	899580100
PULLEY ASSY	PULLER SET	WEIGHT	INSTALLER
Oil seal, Side bearing cup.	Side bearing cone.	Front bearing cone, Pilot bearing, Companion flange.	Front bearing cone, Pilot bearing.
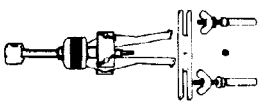 A14-044	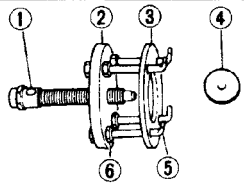 A14-075	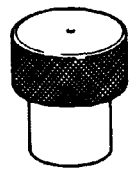 A12-172	A12-179

899874100	899904100	925560000
INSTALLER	STRAIGHT PIN REMOVER	WRENCH
Companion flange.	Differential pinion shaft lock pin.	Differential spindle set bolt.
A12-185	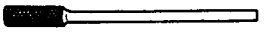 A12-187	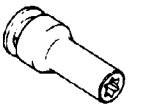 ST-032

Suspension Tools

926110000	926500000	926510000	926520000
COIL SPRING COMPRESSOR	ADAPTER	SPANNER	AIR PIPE REMOVER
Used to remove and install coil spring. Except Air Suspension	Camber & caster gauge. 1800 cc model	Used to disassemble and assemble front strut ASSY or front air suspension ASSY.	Used to disconnect air pipe from joint. For Air Suspension
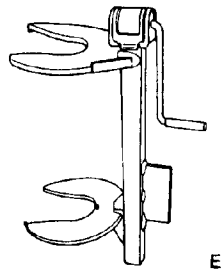 E1-076	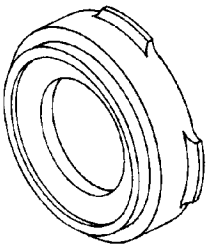 L1-122	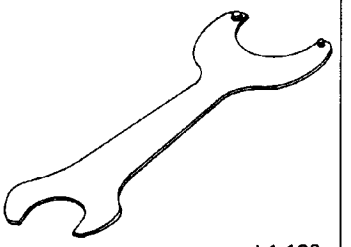 L1-123	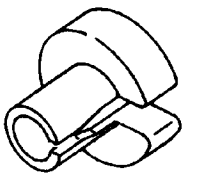 L1-124

926940000	* 927050000
3-WAY JOINT ASSY	ADAPTER
Used as an adapter for gauge manifold of air conditioning system to measure pressure. For Air Suspension	Camber & caster gauge. 2700 cc model
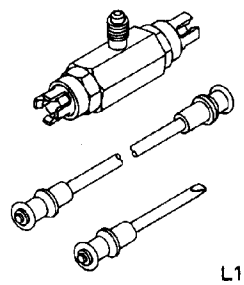 L1-434	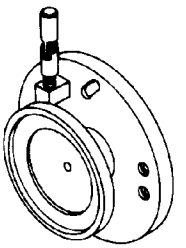 L1-570

* Newly adopted tool

Wheels and Axles Tools

921130000	925091000	925130000 *1	925220000
INSTALLER	BAND TIGHTENING TOOL	INSTALLER	INSTALLER
Brake Drum Bearing (Outer) FWD	D.O.J. Boot B.J. Boot	Front axle shaft.	Brake Drum Bearing (Inner)
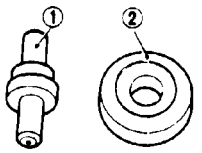 1 Shank 2 Base A16-052	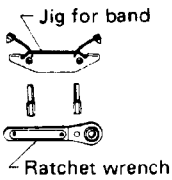 A15-171	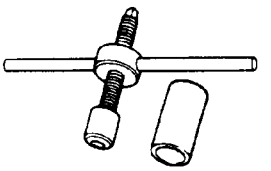 A16-047	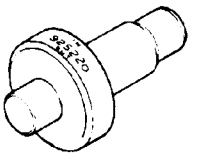 A16-151
925530000	925550000	926470000 *2	926480000 *2
INSTALLER	WRENCH	AXLE SHAFT PULLER	AXLE SHAFT PULLER PLATE
Oil Seal 4WD	Rear Axle Ring Nut 4WD	Used to remove front axle shaft or brake drum.	Same as plate 2 included in AXLE SHAFT PULLER (926470000). Available as spare parts. 1800 cc model
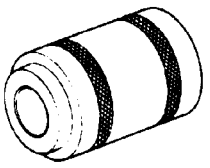 A16-154	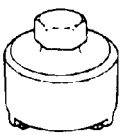 A16-053	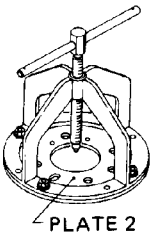 L1-125	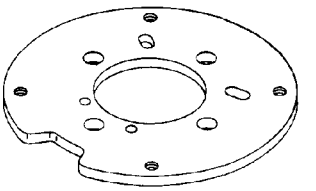 L1-126

926490000
INSTALLER
Used to install bearing and oil seal into front housing.
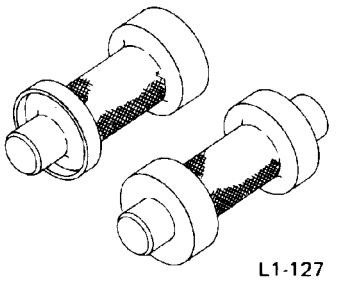 L1-127

*1 AXLE SHAFT INSTALLER (922431000) can be used instead of this INSTALLER (925130000).

922431000
AXLE SHAFT INSTALLER
Used to install front axle shaft into housing. If necessary, use a 41 mm wrench to prevent rotation of installer body.
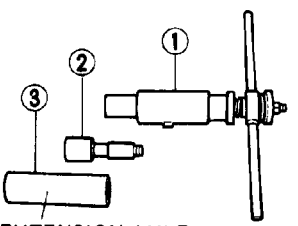 EXTENSION AXLE SHAFT INSTALLER ST-361

*2 Former PULLER (921122000) can be used instead of PULLER (926470000) by replacing its plate 2 with PLATE (926480000)

* 927060000	* 927070000	* 927080000	* 927090000
HUB PULLER	AXLE SHAFT PULLER	HUB STAND	HOUSING STAND
Used to remove front hub. 2700 cc model	Used to remove front axle shaft. 2700 cc model	Used when disassembling and assembling hub ASSY. 2700 cc model	Used in combination with BEARING PULLER (927100000) to disassemble/reassemble housing bearing. 2700 cc model
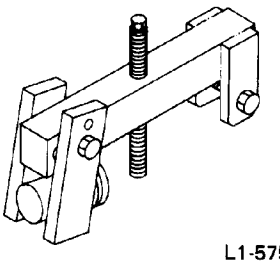 L1-575	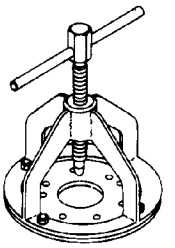 L1-576	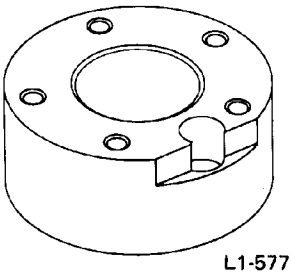 L1-577	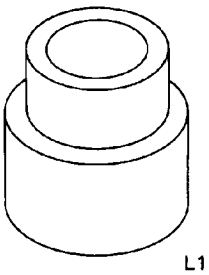 L1-578
* 927100000	* 927110000	* 927120000	* 927130000
BEARING PULLER	OIL SEAL INSTALLER	HUB INSTALLER	EXTENSION AXLE SHAFT INSTALLER
Used to disassemble/reassemble housing bearing. 2700 cc model	Used to install oil seal into housing. 2700 cc model	Used as a bearing pad when pressing hub into place. 2700 cc model	Used in combination with AXLE SHAFT INSTALLER (922431000) to install front axle shaft on hub. 2700 cc model
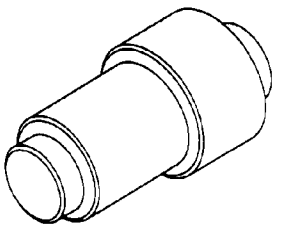 L1-579	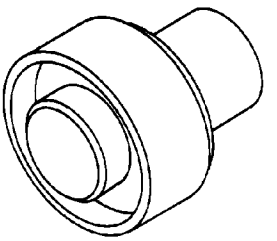 L1-580	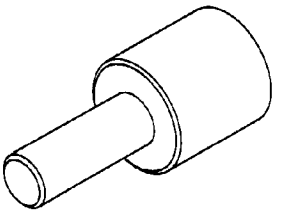 L1-581	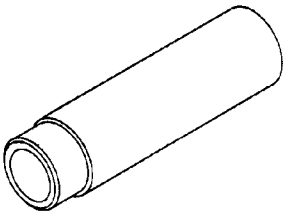 L1-582

* 927140000
AXLE SHAFT PULLER PLATE
Same as plate 2 included in AXLE SHAFT PULLER (926470000). Available as spare parts. 2700 cc model
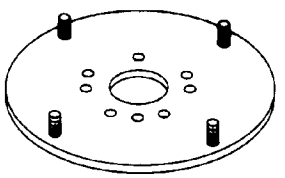 L1-583

* Newly adopted tool

Steering System Tools

1. Manual Steering

925640000 *3	926530000	926540000
SPANNER	BUSH A INSTALLER	BUSH A REMOVER
Big end: Used to loosen and tighten the lock nut when adjusting gear backlash of steering gearbox.	Used to install bush A into steering gearbox unit.	Used to remove bush A from VGR (Variable Gear Ratio) steering gearbox unit. For VGR steering gearbox
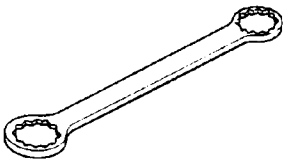 A3-167	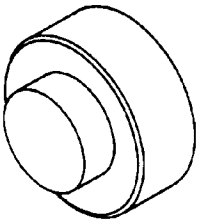 L1-128	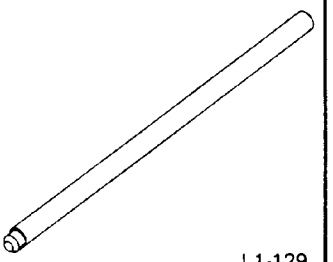 L1-129

*3 SPANNER (926230000) for power steering can be used instead of this tool.

2. Steering Column

926720000	926730000	926740000
CLAMP	INSTALLER	STAND
Used when assembling steering column ASSY. Attach this tool to STAND.	Used to remove and install steering boss of pipe ASSY.	Used when disassembling and assembling steering column ASSY.
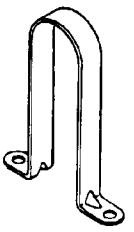 L1-215	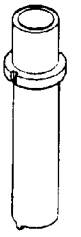 L1-216	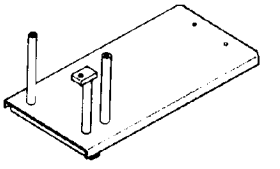 L1-217

3. Power Steering

925700000	925711000 *4	926200000	926210000
WRENCH	PRESSURE GAUGE	STAND	ADAPTER A
Used to remove and install tie-rod. Apply this tool to rack.	Oil pump.	Used when inspection characteristic of gearbox ASSY and disassembling it. Vise this tool and secure gearbox ASSY using gearbox clamps.	Used with PRESSURE GAUGE.
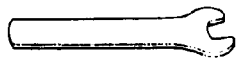 A18-233	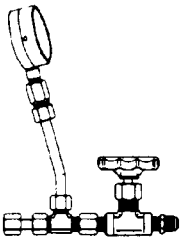 ST-175	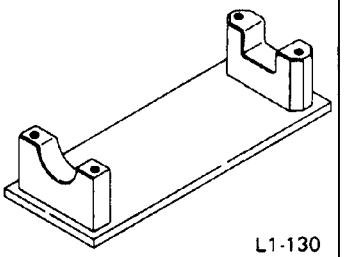 L1-130	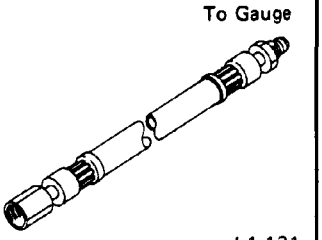 L1-131
926220000	926230000	926240000	926250000
ADAPTER B	SPANNER	INSTALLER	GUIDE
Used with PRESSURE GAUGE.	For the lock nut when adjusting backlash of gearbox. Removal and installation of tie-rod. Measurement of rotating resistance of gearbox ASSY.	Oil seal of steering body ASSY.	Fit this tool to the left side of rack when installing seal holder ASSY into steering body ASSY.
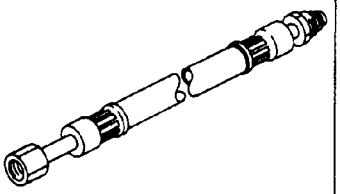 L1-132	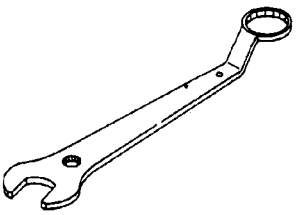 L1-133	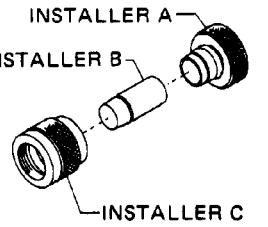 L1-281	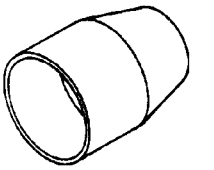 L1-190
926260000	926290000	926300000	926310000
REMOVER	REMOVER	INSTALLER	GUIDE
Seal holder snap ring.	Used to remove dust seal, back-up ring, Y-packing and ball bearing from valve housing. Used to install ball bearing into valve housing	Used to install dust seal, back-up ring and Y-packing into valve housing.	Input shaft.
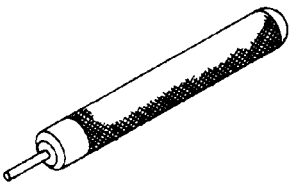 L1-191	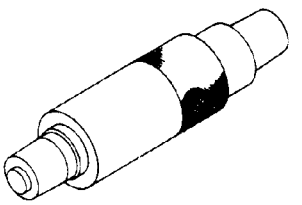 L1-194	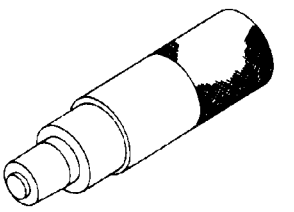 L1-195	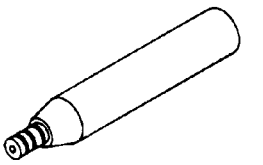 L1-196

*4 Interchangeable with former PRESSURE GAUGE (925710000).

926320000	926330000	926420000	*926970000
INSTALLER	REMOVER	PLUG	INSTALLER
Attach this tool to the left side of rack when press-fitting back-up ring and oil seal to steering body ASSY.	Used to remove back-up ring and oil seal from steering body.	When oil leaks from pinion side of gearbox ASSY, remove pipe B from valve housing, attach this tool and check oil leaking points.	Oil seal of oil pump.
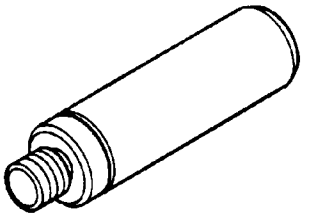 L1-197	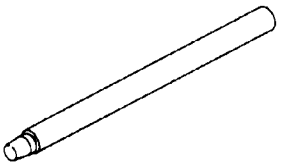 L1-198	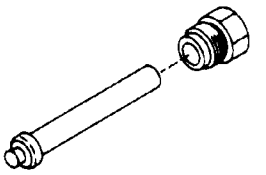 L1-142	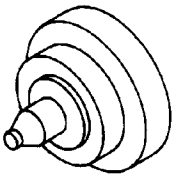 L1-496

926980000	* 927020000
GUIDE	JIG MOTOR PUMP ASSY
Shaft and bearing ASSY of oil pump.	Used to over-haul MOTOR PUMP ASSY.
L1-497	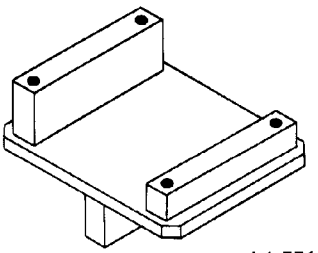 L1-571

* Newly adopted tool

Brakes Tools

925460000	925471000	925600000	926430000
WHEEL CYLINDER 11/16" ADAPTER	DISC BRAKE CYLINDER PULLER	O-RING ADAPTER	DISC BRAKE PISTON WRENCH
Installing cup onto piston of rear drum brake wheel cylinder (size 11/16 in). Rear drum brake	Pressing cone spring (front disc brake). All models	Installing spindle O-ring (front disc brake). All models	Used with SPACER (926440000) to rotate front disc brake piston. All models
 A17-163	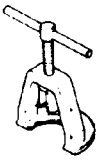 ST-148	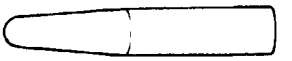 A17-160	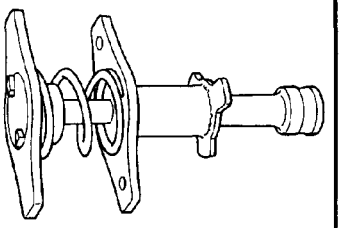 L1-143

926440000
SPACER
Used as a set with WRENCH (926430000). Attach this tool to WRENCH using two 6-mm dia. bolts (length: less than 15 mm). All models
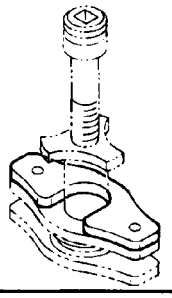 L1-144

Air Conditioning System Tools

925770000	925790000	925800000 *6	925820000 *6
CLUTCH TIGHTENER	HUB NUT TIGHTENER	OIL SEPARATOR	FLEXIBLE HOSE
For holding clutch hub.	For tightening hub nut.	For withdrawing oil from refrigeration system.	(Used with OIL SEPARATOR)
A26-045	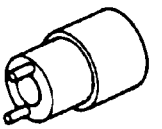 A26-047	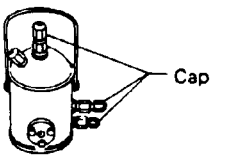 ST-176	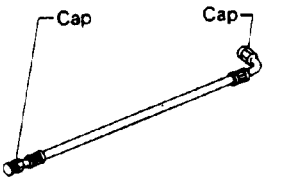 ST-178
925840000 *6	925850000 *6	926120000	926130000
DOUBLE UNION	CONNECTOR PIPE	SHAFT SEAL INSTALLER	CLUTCH ARMATURE REMOVER
(Used with OIL SEPARATOR)	(Used with OIL SEPARATOR)	For removing and installing shaft seal.	For clutch disassembly.
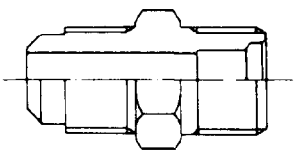 ST-179	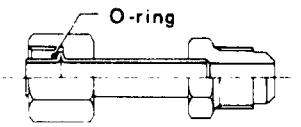 ST-180	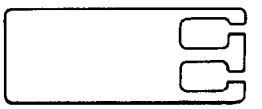 L4-541	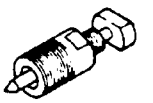 A26-046
926140000	926150000	926160000	926170000
SHAFT ROTATOR	COVER PLATE REMOVER	HEXAGON SOCKET (8 mm)	FRONT COVER TIGHTENER
For assemble and rotation checking.	For cover plate removal.	For elbow removal and installation.	For shell removal and installation.
L4-542	L4-543	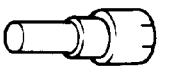 L4-544	L4-545

*6 Oil Separator Kit is composed of Oil Separator, Flexible Hose, Double Union and Connector Pipe.

926180000	926190000
HEXAGON SOCKET (10 mm)	INJECTOR NEEDLE
For cover end (R) removal and installation.	For discharging and charging gas.
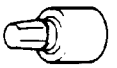 L4-546	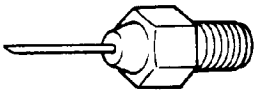 L4-547

Body Tools

925580000	925610000	926661000	927000000
PULLER	WRENCH	REMOVER	ENGINE SUPPORT ASSY
Trim clip.	Door hinge.	Used to remove and install trunk torsion bar.	For supporting engine. 1800 cc model
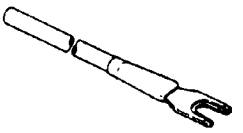 ST-035	ST-166	L1-282	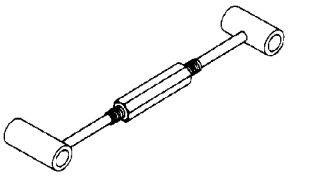 L1-511

927010000	* 927150000	* 927160000
BRACKET (ENGINE SUPPORT)	ENGINE SUPPORT ASSY	BRACKET (ENGINE SUPPORT)
Used together with ENGINE SUPPORT ASSY. 1800 cc model	For supporting engine. 2700 cc model	Used together with ENGINE SUPPORT ASSY. 2700 cc model
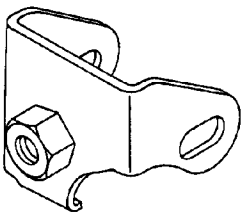 L1-512	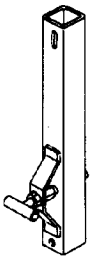 L1-572	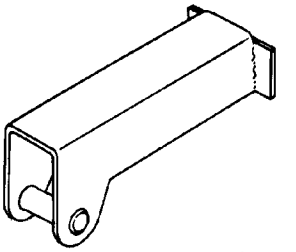 L1-573

* Newly adopted tool

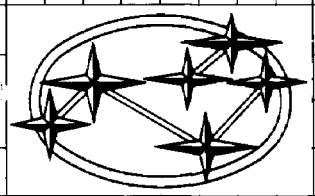

Publication No. G140BE ①
Issued: July 1987 A
Printed in Japan M-4.2

SUBARU®

XT

1988 SERVICE MANUAL

SECTION 2 and 3

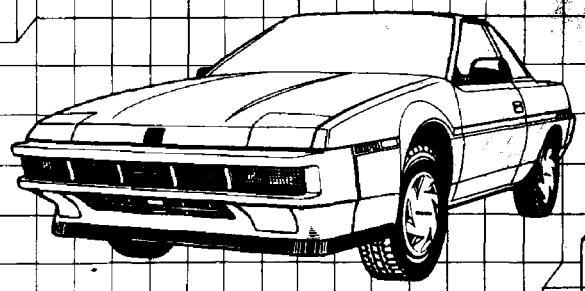

FUJI HEAVY INDUSTRIES LTD.

FOREWORD

This service manual has been prepared to provide SUBARU service personnel with the necessary information and data for the correct maintenance and repair of SUBARU XT.

The manual includes the procedures for maintenance, disassembling, reassembling, inspection and adjustment of components and trouble-shooting for guidance of both the fully qualified and the less-experienced mechanics.

Please peruse and utilize this manual fully to ensure complete repair work for satisfying our customers by keeping their vehicles in optimum condition. When replacement of parts during repair work is needed, be sure to use SUBARU genuine parts.

All information, illustrations and specifications contained in this manual are based on the latest product information available at the time of publication approval.

We reserve the right to make changes at any time without prior notice.

FUJI HEAVY INDUSTRIES LTD.

How to use this manual

This service manual is divided into four volumes. Each volume consists of Section 1, Section 2, 3, Section 4, 5, and Section 6 respectively.

Each chapter, beginning with the Engine section, is basically made up of the following five areas.

1. Mechanism and function
2. Specifications and service data
3. Component parts
4. Service procedure
5. Trouble-shooting

"ABBREVIATION LIST" is provided at the back page of quick reference index in each volume.

"ALPHABETICAL INDEX" is also provided at the last page in each volume.

This service manual applies to SUBARU XT, and explains all equipments including factory options. Therefore, you may find some explanations for equipments not installed on the vehicle.

SUBARU, and are registered trademarks of FUJI HEAVY INDUSTRIES LTD.
© Copyright 1987 FUJI HEAVY INDUSTRIES LTD. All rights reserved.

Not to be reproduced in whole or in part without the prior written permission
of FUJI HEAVY INDUSTRIES LTD., TOKYO JAPAN.

TABLE OF CONTENTS

1 GENERAL SECTION	1–1 Specifications 1–2 ★ ★ ★ ★ ★ ★ ★ ★ ★ ★ ★ ★ ★ 1–3 General Information 1–4 Pre-Delivery Inspection 1–5 Periodic Maintenance Services 1–6 Special Tools
2 ENGINE SECTION	2–1 Emission Control System and Vacuum Fitting 2–2 On-Car Services 2–3 Engine 2–4 Engine Lubrication System 2–5 Engine Cooling System 2–6 ★ ★ ★ ★ ★ ★ ★ ★ ★ ★ ★ ★ ★ 2–7 Fuel Injection System 2–8 Fuel System 2–9 Exhaust System 2–10 Clutch 2–11 Engine and Transmission Mounting System
3 TRANSMISSION AND DIFFERENTIAL SECTION	3–1 Manual Transmission and Differential 3–2 Automatic Transmission and Differential 3–3 Transmission Control System 3–4 4WD System
4 MECHANICAL COMPONENTS SECTION	4–1 Suspension 4–2 Wheels and Axles 4–3 Steering System 4–4 Brakes 4–5 Pedal System and Control Cables 4–6 Heater and Ventilator 4–7 Air Conditioning System
5 BODY SECTION	5–1 Body and Exterior 5–2 Doors and Windows 5–3 Seats, Seat Belts, and Interior 5–4 Instrument Panel
6 ELECTRICAL SECTION	6–1 Engine Electrical System 6–2 Body Electrical System 6–3 Wiring Diagram and Trouble-shooting

SUBARU

1988

SERVICE MANUAL

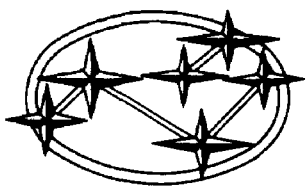

2 ENGINE SECTION

EMISSION CONTROL SYSTEM AND VACUUM FITTING 2-1
ON-CAR SERVICES 2-2
ENGINE 2-3
ENGINE LUBRICATION SYSTEM 2-4
ENGINE COOLING SYSTEM 2-5
* * * * * * * * * * * * * 2-6
FUEL INJECTION SYSTEM 2-7
FUEL SYSTEM 2-8
EXHAUST SYSTEM 2-9
CLUTCH 2-10
ENGINE AND TRANSMISSION MOUNTING SYSTEM 2-11

3 TRANSMISSION AND DIFFERENTIAL SECTION

MANUAL TRANSMISSION AND DIFFERENTIAL 3-1
AUTOMATIC TRANSMISSION AND DIFFERENTIAL 3-2
TRANSMISSION CONTROL SYSTEM 3-3
4WD SYSTEM 3-4

ABBREVIATION LIST

AAV	Anti-Afterburning Valve
ABDC	After Bottom Dead Center
A/C	Air Conditioner
A/D	Analog/Digital
AI	Air Injection
approx.	approximately
ASSY	Assembly
ASV	Air Suction Valve
AT	Automatic Transmission
ATC	Automatic Temperature Controller
ATDC	After Top Dead Center
ATF	Automatic Transmission Fluid
Batt.	Battery
BBDC	Before Bottom Dead Center
BDC	Bottom Dead Center
BJ	Bell Joint
BTDC	Before Top Dead Center
Cal	California
Coolant temp.	Coolant temperature
CP	Complete
CPU	Central Processing Unit
CTR	Center
C/U	Control Unit
CVJ	Constant Velocity Joint
DOJ	Double Offset Joint
D/R	Dual-range
D.S.V.	Duty Solenoid Valve
ECC	Electronically Controlled Carburetor
ECM	Electronic Control Module
ECS	Electric Control System
E/G	Engine
EGR	Exhaust Gas Recirculation
Ex. port	Exhaust port
FCV	Float Chamber Ventilation
FF	Front drive Front engine
FICD	Fast Idle Control Device
F/L	Fusible Link
F/P	Fuel Pump
FWD	Front Wheel Drive (= 2WD)
gear UN	gear Unit
GND	Ground
H/A	High Altitude
HLA	Hydraulic Lash Adjuster
IAS	Idle Adjusting Screw
I.D.	Inside Diameter
I/D	Idle
IG	Ignition
IG ON	Ignition ON
IG SW	Ignition Switch
I/O	Input/Output
KD	Kick-Down
KDLH	Kick-Down Low Hold
LED	Light Emitting Diode
Led.	Light emitting diode
LH	Left-hand
LSD	Limited Slip Differential
L/U	Lock-Up
MPFI	Multi Point Fuel Injection
MPS	Motor Power Steering (Electronic-Controlled Motor Drive Power Steering)
MP-T	Multi-Plate-Transfer
MT	Manual Transmission
O.D	Outside Diameter or Overdrive
OHC	Over-Head Camshaft
O/P	Oil Pump
OP.	Option
OS	Oversize
OVR/C	Overrunning Clutch
O.W.C.	One-Way Clutch
pcs.	pieces
PCV	Positive Crankcase Ventilation
Pd	Palladium
P.H.V	Pressure Hold Valve
P.M	Primary Main
Power TR	Power Transistor
Press. SW	Pressure Switch
P.S	Primary Slow
PTC heater	Positive Temperature Coefficient heater
Pt	Platinum
REG	Regulation
Rev.	Reverse
Rh	Rhodium
RH	Right-hand
SAC	Sub Advance Control
SAE	Society of Automotive Engineers
SMAB	Secondary Main Air Bleed
S.M	Secondary Main
sol.	solenoid
S/R	Single-range
STD	Standard
St.	Starter
ST SW	Starter Switch
TCU	Transmission Control Unit
TDC	Top Dead Center
Temp. valve	Temperature valve
TRF/C	Transfer Clutch
UIL (SIL)	Up Shift Indicator Light
US	Undersize
VLC	Vacuum Line Control
WOT	Wide Open Throttle

INDEX

Accumulator 3-2- 37
Accumulator Control Valve 3-2- 29
Air Flow Meter 2-7- 18
Air Flow Meter 2-7- 2
Air-fuel Ratio Learning Control System 2-7- 8
Air Intake System 2-7- 29
Air Intake System 2-7- 17
ATF Level 3-2-148
ATF Temperature Sensor 3-2- 54
Automatic Transmission 3-3- 10
Auxiliary Air Valve 2-7- 24
Auxiliary Air Valve 2-7- 6
Band Brake 3-2- 14
Brake Band 3-2-150
By-pass Air Control Valve 2-7- 23
By-pass Air Control Valve 2-7- 5
Camshaft and Valve Rocker 2-3- 77
Camshaft and Valve Rocker 2-3- 22
Canister 2-1- 9
Center Differential & Extension ASSY
(Full-Time 4WD) 3-1- 55
Clear Memory Mode 2-7- 55
Clutch Play Adjustment 2-10- 5
Control Valve Body 3-2-105
Coolant Thermosensor 2-7- 29
Coolant Thermosensor 2-7- 10
Cooling Fan and Fan Motor 2-5- 15
Cooling System 2-2- 7
Crankcase Emission Control System 2-1- 5
Crankshaft and Piston 2-3- 96
Crankshaft and Piston 2-3- 41
Cylinder Block 2-3- 33
Cylinder Block 2-3- 86
Cylinder Head 2-3- 81
Cylinder Head 2-3- 27
Cylinder Head Bolts 2-2- 9
D-check Mode 2-7- 54
Differential ASSY (FWD) 3-1- 78
Differential ASSY (Selective 4WD) 3-1- 48
Differential Case Assembly 3-2-117
Differential Gear 3-2- 20
Differential Gear Oil Level 3-2-149
Drive Pinion Shaft 3-2-109
Drive Pinion Shaft ASSY (Full-Time 4WD) 3-1- 61
Drive Pinion Shaft ASSY (FWD) 3-1- 73
Drive Pinion Shaft ASSY (Selective 4WD) 3-1- 44
Duty Solenoid C and Transfer Valve Body 3-2-156
Engine Compression 2-2- 3
Engine Idle Speed 2-2- 4
Engine Idling Speed 3-2-150
Evaporative Emission Control System 2-1- 8
Extension & Transfer Gear ASSY
(Selective 4WD) 3-1- 42
Fail-safe Function 3-2- 52
Forward Clutch Drum 3-2-113
Forward Clutch & Overrunning Clutch 3-2- 17
Front Exhaust Pipe 2-9- 4
Fuel Delivery, Return and Evaporation Lines 2-8- 11
Fuel Filler Pipe 2-8- 7
Fuel Filter 2-8- 9
Fuel Injector 2-7- 25
Fuel Injector 2-7- 9
Fuel Meter Unit 2-8- 7
Fuel Pump 2-8- 10
Fuel Separator 2-1- 10
Fuel Separator 2-8- 8
Fuel Tank 2-8- 6
High Clutch 3-2- 13
High Clutch 3-2-112
High Tension Cords 2-2- 9
Hypoid Gear 3-2- 20
Ignition Control System 2-1- 6
Ignition System 2-7- 6
Ignition Timing 2-2- 2
Inhibitor Switch 3-2-151
Inhibitor Switch 3-2- 55
Input Shaft 3-2- 18
Intake Manifold 2-7- 15
Intake Manifold Vacuum 2-2- 3
Knock Sensor 2-7- 8
Line Pressure Test 3-2-162
Lock-up Control — Mechanism 3-2- 6
Lock-up Control — Operation 3-2- 8
Lock-up Control Valve 3-2- 35
Low & Reverse Brake 3-2- 16
Manual Transmission 3-3- 7
Manual Valve 3-2- 34
Muffler Assembly 2-9- 6
Oil Leakage Check Points 3-2-149
Oil Pump 2-4- 10
Oil Pump 3-2- 9
Oil Pump Assembly 3-2-106
Oil Pump Assembly 2-2- 10
One-way Clutch 3-2- 15
One-way Clutch Outer Race 3-2-116
Overall Transmission (Full-Time 4WD) 3-1- 49
Overall Transmission (FWD) 3-1- 66
Overall Transmission (Selective 4WD) 3-1- 27
Overrunning Clutch Control Valve 3-2- 33
Overrunning Clutch Reducing Valve 3-2- 33
Oxidation Catalyst 2-1- 8
Oxygen (O_2) Sensor 2-2- 6
O_2 Sensor 2-7- 8
PCV Valve 2-1- 5
Pilot Valve 3-2- 34
Pilot Valve (Transfer) 3-2- 61
Planetary Gear 3-2- 18
Power Indicator Light 3-2- 45
Pressure Modifier Valve 3-2- 29
Pressure Regulator 2-7- 10
Pressure Regulator 2-7- 29
Pressure Regulator Valve 3-2- 28

Propeller Shaft 3-4- 14
Radiator 2-5- 13
Read Memory Mode 2-7- 51
Rear Case & Shifter ASSY (FWD) 3-1- 71
Rear Differential Assembly 3-4- 20
Rear Exhaust Pipe 2-9- 5
Reduction Drive Gear Assembly 3-2-104
Reduction Gear 3-2- 19
Resistor 2-7- 25
Reverse Clutch 3-2-111
Reverse Clutch 3-2- 12
Road Test 3-2-164
Self-diagnosis System 2-7- 33
Servo Charger Valve 3-2- 36
Servo Piston 3-2-116
Shift Solenoid, Duty Solenoid and Valve Body 3-2-153
Shift Valve A and 4-2 Relay Valve 3-2- 32
Shift Valve B and 4-2 Sequence Valve 3-2- 31
Shuttle Shift Valve D 3-2- 30
Shuttle Shift Valve S 3-2- 34
Solenoids 3-2- 54
Specification Codes 2-7- 35
Speedometer Gear System 3-2- 21
Stall Test 3-2-159
Tail Pipe Cutter 2-9- 7
Thermometer 2-5- 12
Thermostat 2-5- 12
Three-way Catalyst 2-1- 8
Throttle Body 2-7- 3
Throttle Body 2-7- 21
Throttle Body 2-7- 13
Throttle Sensor 3-2- 53
Throttle Sensor 2-7- 4
Time Lag Test 3-2-162
Timing Belt and Belt Cover 2-3- 69
Timing Belt and Belt Cover 2-3- 17
Torque Converter Regulator Valve 3-2- 29
Transfer Case & Shifter ASSY (Full-Time 4WD) 3-1- 57
Transfer Case & Shifter ASSY (Selective 4WD) 3-1- 43
Transfer Clutch 3-2-118
Transfer Control Valve 3-2- 61
Transfer Valve Body 3-2-120
Transmission Harness 3-2-152
Transmission Main Shaft ASSY (FWD) 3-1- 75
Transmission Main Shaft ASSY (Selective 4WD) 3-1- 46
Trouble Codes 2-7- 35
Troubleshooting Chart for Self-diagnosis System 2-7- 50
Two-way Valve 2-1- 10
Vacuum Fitting 2-1- 12
Valve and Valve Spring 2-3- 85
Valve and Valve Spring 2-3- 31
Vehicle Revolution Sensor 3-2-153
Vehicle Revolution Sensor 1 ..... 3-2- 54
Water Pump 2-5- 10
Water Pump Assembly 2-2- 14
1st Hold Indicator Light 3-2- 45
1st Reducing Valve 3-2- 36
3-2 Timing Valve 3-2- 36

EMISSION CONTROL SYSTEM AND VACUUM FITTING

2-1

SUBARU

1988

	Page
System Application	2
General Precautions	2
Schematic Drawing	3
Crankcase Emission Control System	5
DESCRIPTION	5
INSPECTION	6
Ignition Control System	6
Three-Way Catalyst	8
Oxidation Catalyst	8
Evaporative Emission Control System	8
DESCRIPTION	8
INSPECTION	10
Vacuum Fitting	11

System Application

There are three emission control systems which are as follows:
1) Crankcase emission control system
2) Exhaust emission control system
   - Ignition control system
   - Front catalyst (Three-way catalyst)
   - Rear catalyst (Oxidation catalyst)
3) Evaporative emission control system

General Precautions

1) Know the importance of periodic maintenance services.
   (1) Every service item in the periodic maintenance schedule must be performed.
   (2)Failing to do even one item can cause the engine to run poorly and increase exhaust emissions.
2) Determine if you have an engine or emission system problem.
   (1) Engine problems are usually not caused by the emission control systems.
   (2) When troubleshooting, always check the engine and the ignition system first.
3) Check hose and wiring connections first.
The most frequent cause of problems is simply a bad connection in the wiring or vacuum hoses. Always make sure that connections are secure and correct.
4) Avoid coasting with the ignition turned off and prolonged engine braking.
5) Do not damage parts.
   (1) To disconnect vacuum hoses, pull on the end, not the middle of the hose.
   (2) To pull apart electrical connectors, pull on the connector itself, not the wire.
   (3) Be careful not to drop electrical parts, such as sensors, or relays.
   If they are dropped on a hard floor, they should be replaced and not reused.
   (4) When steam cleaning an engine, protect the distributor, coil, air cleaner, and throttle body from water.
   (5) When checking continuity at the wire connector, the test bar should be inserted carefully to prevent terminals from bending.
6) Use SUBARU genuine parts.
7) Record how hoses are connected before disconnecting.
   (1) When disconnecting vacuum hoses, use tags to identify how they should be reconnected.
   (2) After completing a job, double check to see that the vacuum hoses are properly connected. See the "Vacuum connections label" under the hood.

Schematic Drawing

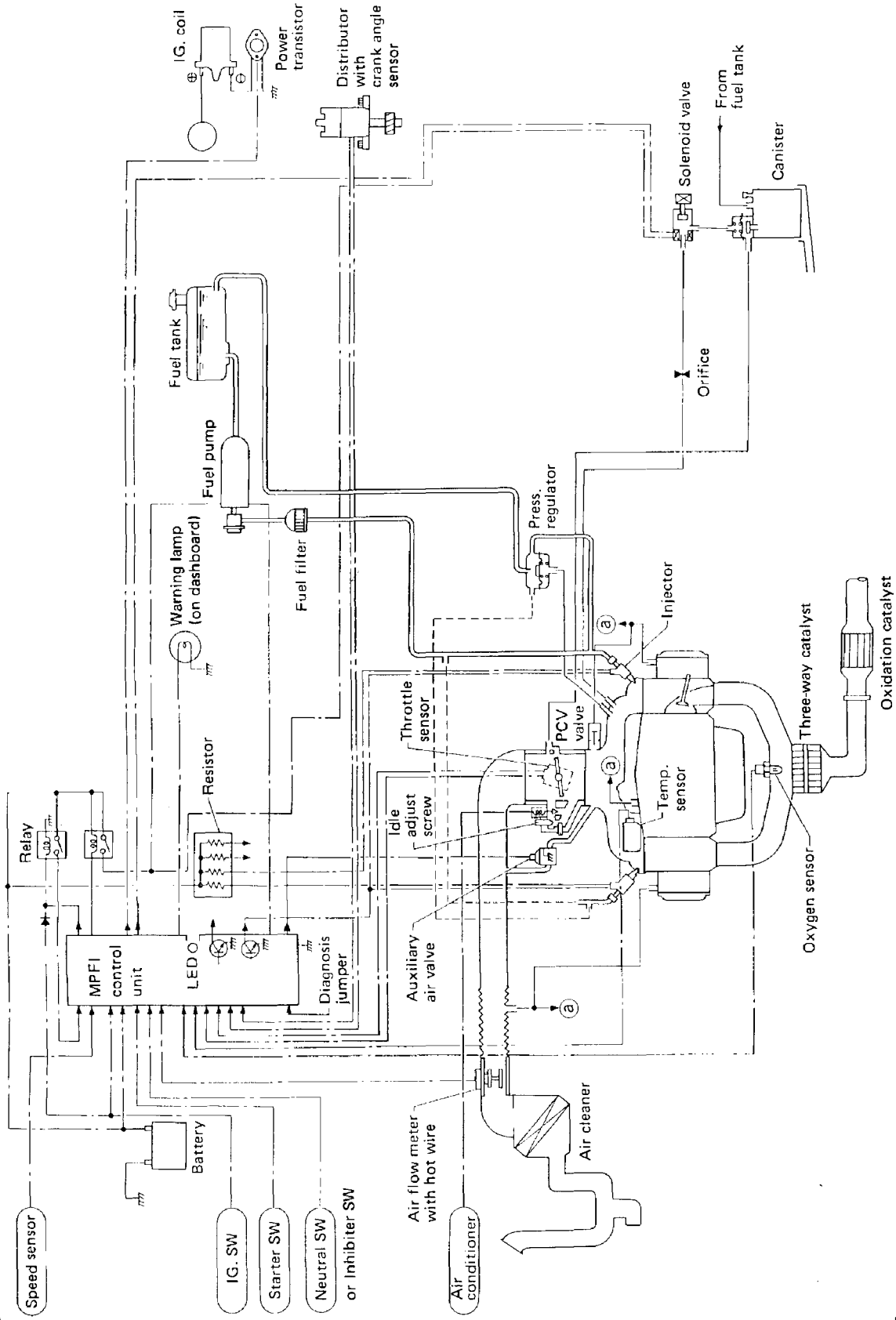

Fig. 1 1800 cc

L2-1255

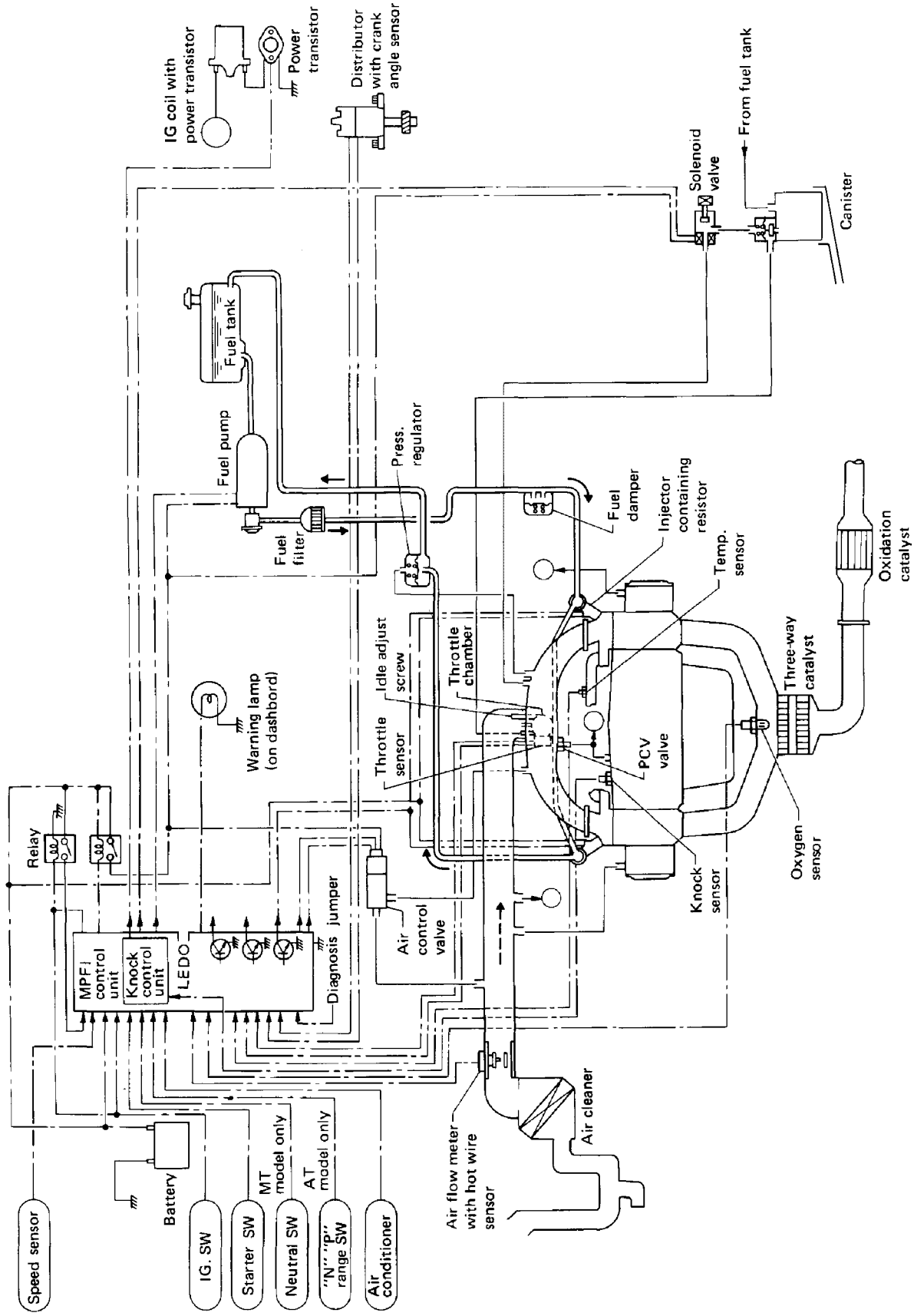

Fig. 2 2700 cc

L2-1256

Crankcase Emission Control System

DESCRIPTION

The positive crankcase ventilation (PCV) system is employed to prevent air pollution which will be caused by blow-by gas being emitted from the crankcase.

The system consists of a sealed oil filler cap, rocker covers with an emission outlet and fresh air inlet, connecting hoses, PCV valve and an air cleaner.

At the part throttle, the blow-by gas in the crankcase flows into the intake manifold through the connecting hose of rocker cover on #2/#4 side, connecting hose of crankcase and PCV valve by the strong vacuum of the intake manifold. Under this condition, the fresh air is introduced into the crankcase through connecting hose of rocker cover on #1/#3 side, and drawn to the intake manifold through PCV valve together with the blow-by gas.

At the wide open throttle, a part of blow-by gas flows into the air cleaner through the connecting hose of rocker cover on #1/#3 side and is drawn to the throttle body, because under this condition, the intake manifold vacuum is not so strong as to introduce all blow-by gases increasing with engine speed directly through the PCV valve.

Under the special operating condition, such as steep right turn driving, engine oil sometimes blows up into connecting hose or rocker cover on #2/#4 side and flows into the intake manifold by the force of the vacuum.

However, in this case, the connecting hose between intake duct and connecting hose of rocker cover on #2/#4 side reduces the vacuum to prevent this.

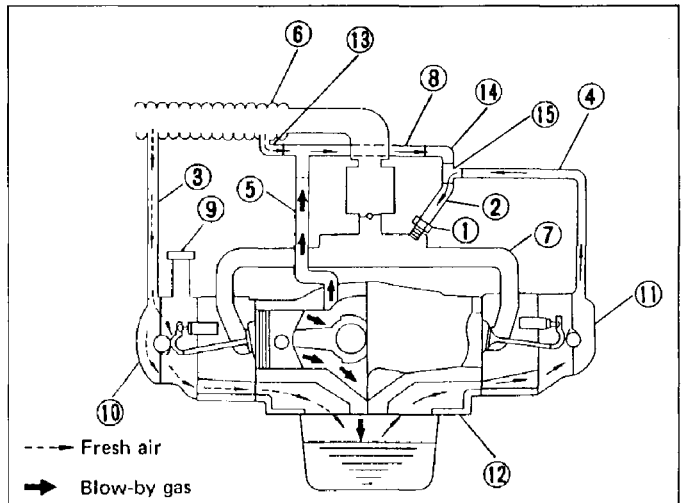

1 PCV valve
2 PCV hose
3 Blow-by hose (RH)
4 Blow-by hose (LH)
5 Blow-by hose (CTR)
6 Intake duct
7 Intake manifold
8 Connector
9 Oil filler cap
10 Rocker cover (#1/#3)
11 Rocker cover (#2/#4)
12 Crankcase
13 Connecting hose
14 Connecting hose
15 Connector

L1-039

Fig. 3 1800 cc

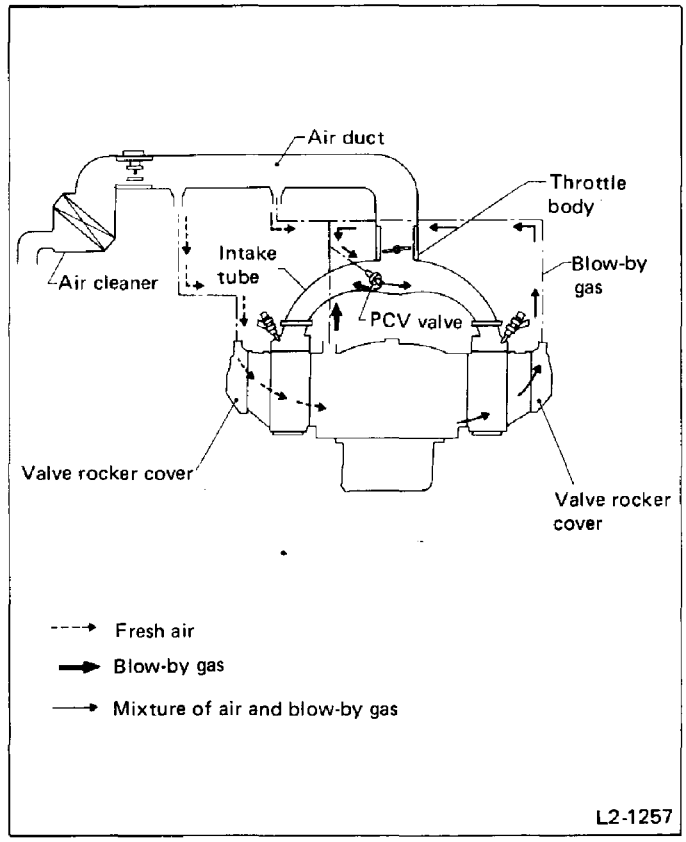

Fig. 4 2700 cc

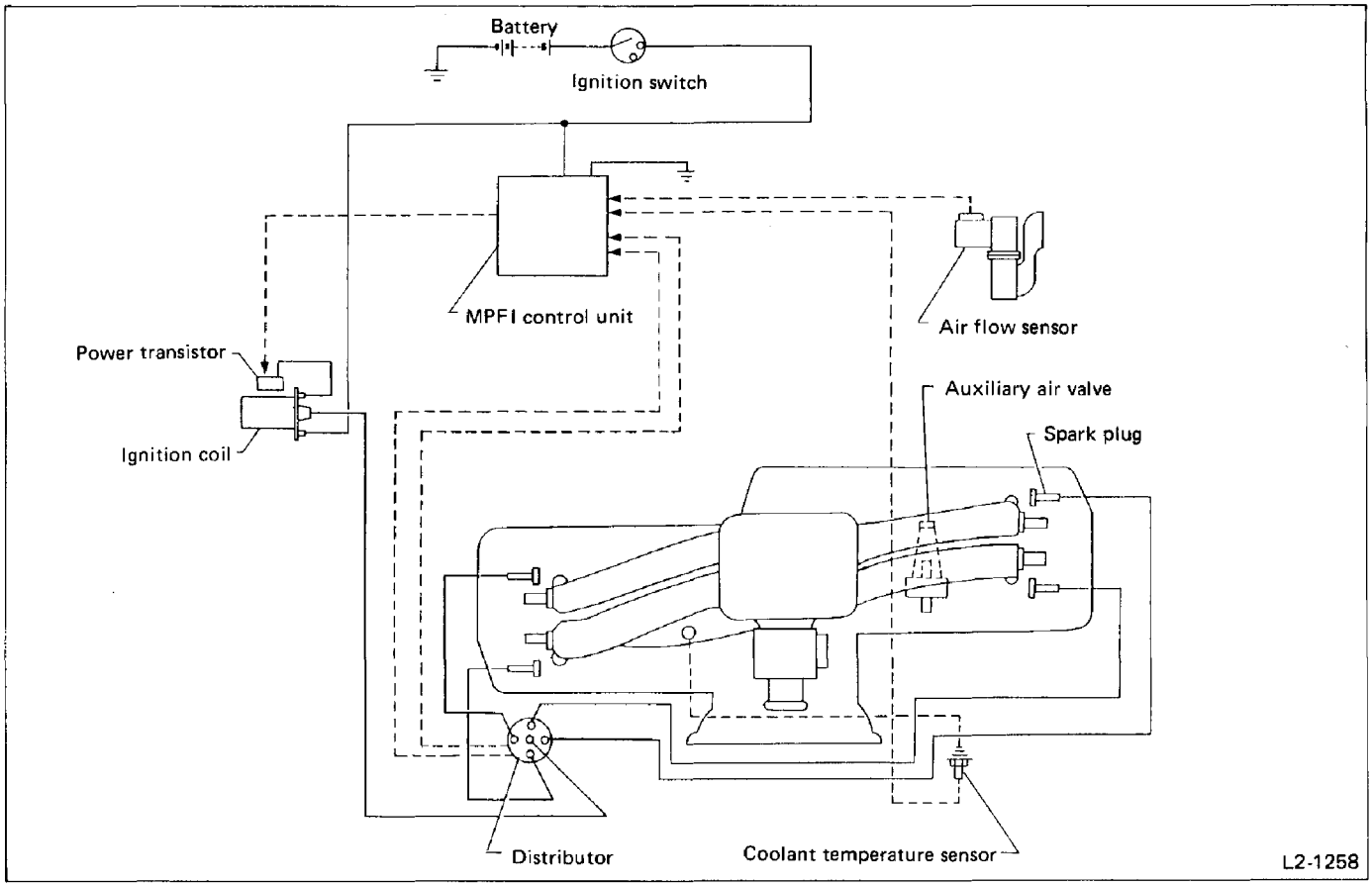

Fig. 6 1800 cc

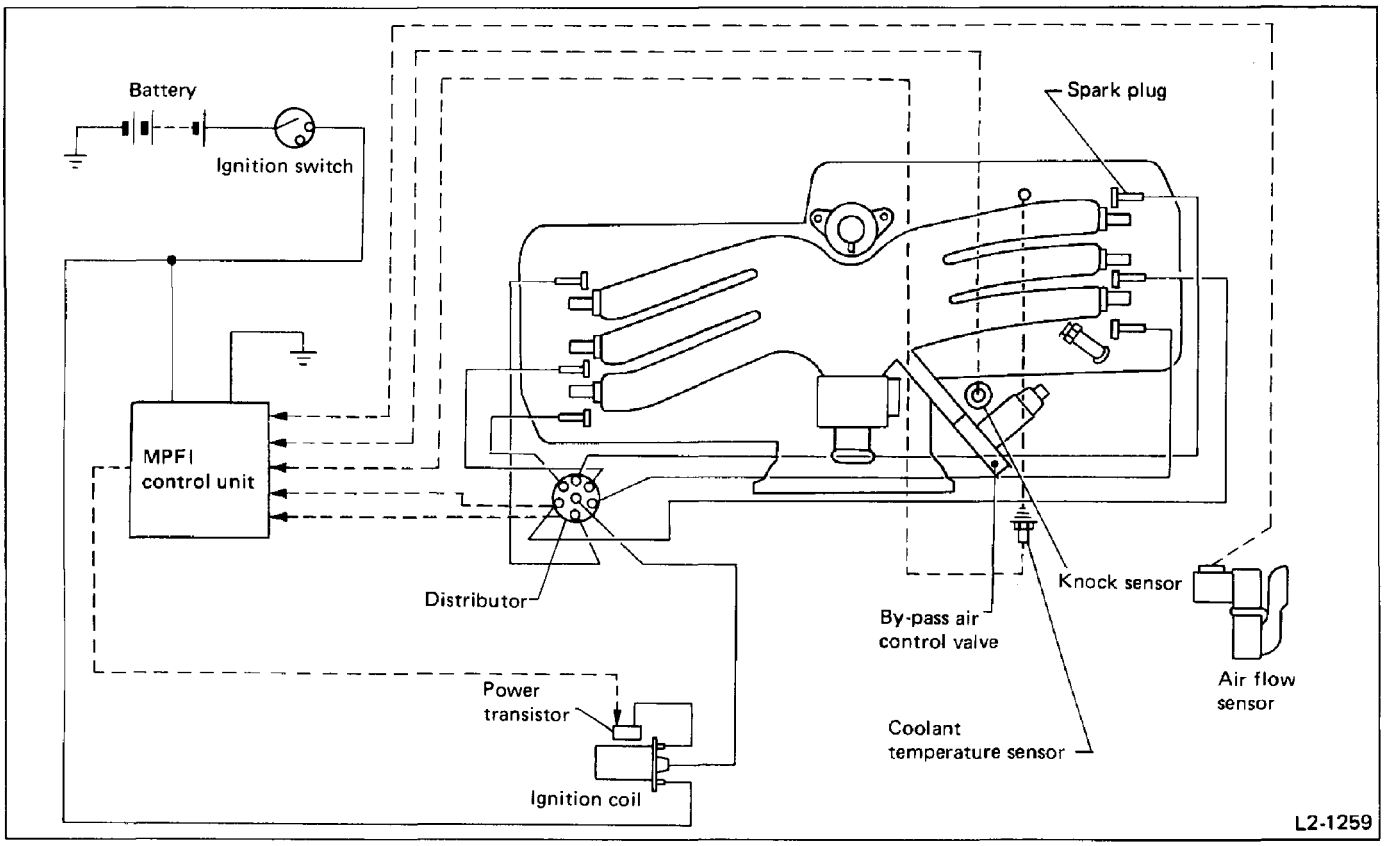

Fig. 7 2700 cc

Three-way Catalyst

The basic material of three-way catalyst is platinum (Pt) and rhodium (Rh), and a thin film of their mixture is applied onto honeycomb or porous ceramics of an oval shape (carrier). To avoid damaging the catalyst, only unleaded gasoline should be used.

The catalyst is used to reduce HC, CO and NOx in exhaust gases, and permits simultaneous oxidation and reduction. To obtain an excellent purification efficiency on all components HC, CO and NOx, a balance should be kept among the concentrations of the components. These concentrations vary with the air-fuel ratio.

The air-fuel ratio needs to be controlled to a value within the very narrow range covering around the theoretical (stoichiometric) air-fuel ratio to purify the components efficiently.

The air-fuel ratio is controlled by the MPFI system.

Refer to 2-7 "FUEL INJECTION SYSTEM".

Oxidation Catalyst

The basic material is Palladium (Pd) and Rhodium (Rh).

A thin film of their mixture is applied onto honeycomb or porous ceramics of an oval shape (carrier). To avoid damaging the catalyst, only unleaded gasoline should be used.

The catalyst is used to reduce HC, CO in exhaust gases.

Evaporative Emission Control System

DESCRIPTION

The evaporative emission control system is employed to prevent evaporative fuel from being discharged into ambient atmosphere. This system includes a canister, two-way valve, fuel separator, purge control solenoid valve, connecting lines, etc.

Gasoline vapor evaporated from the fuel in the fuel tank is introduced into the canister located in the engine compartment through the evaporation line, and is absorbed on activated carbon in it. A two-way valve and a fuel separator are also incorporated on the tank fuel line.

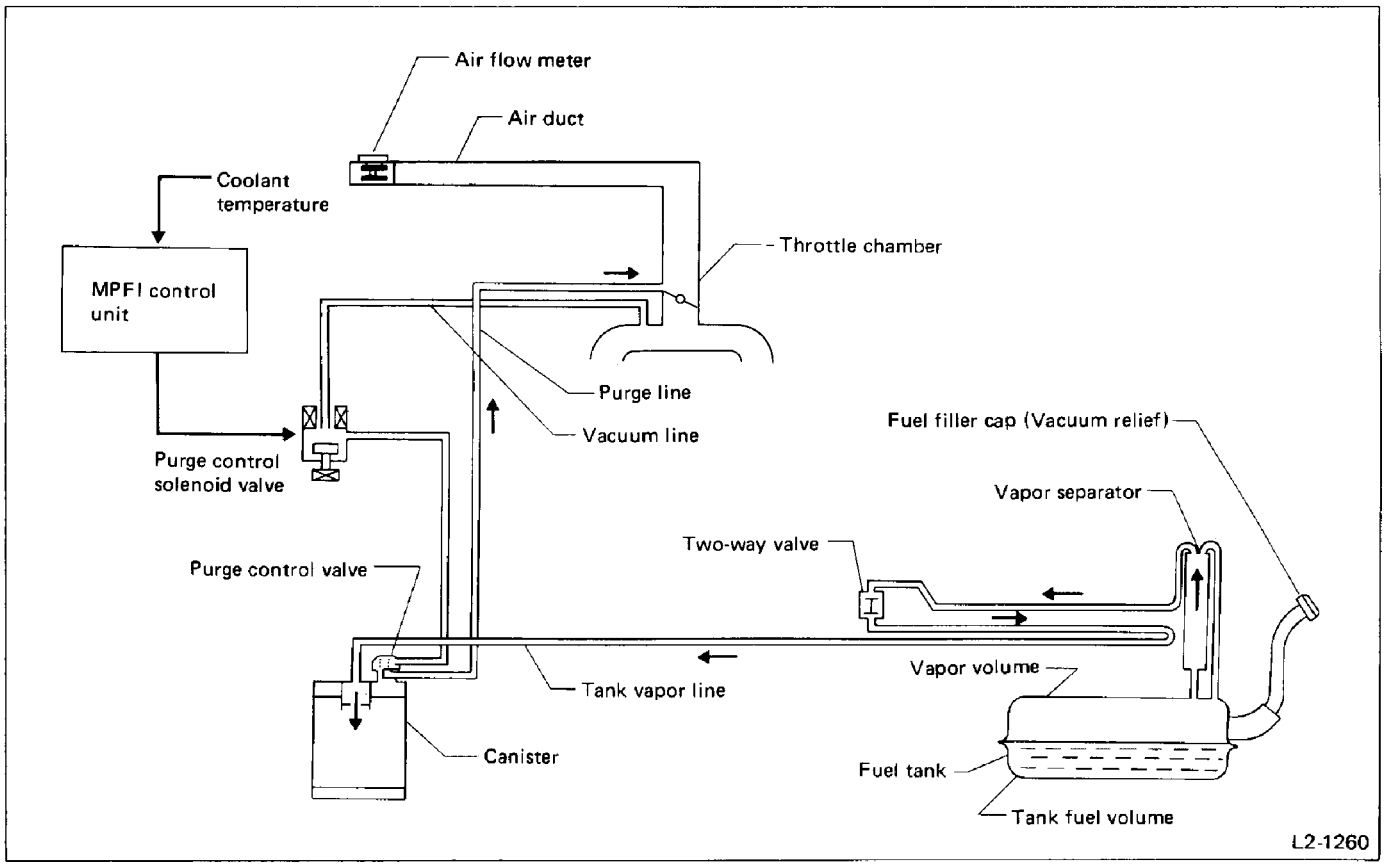

Fig. 8 1800 cc

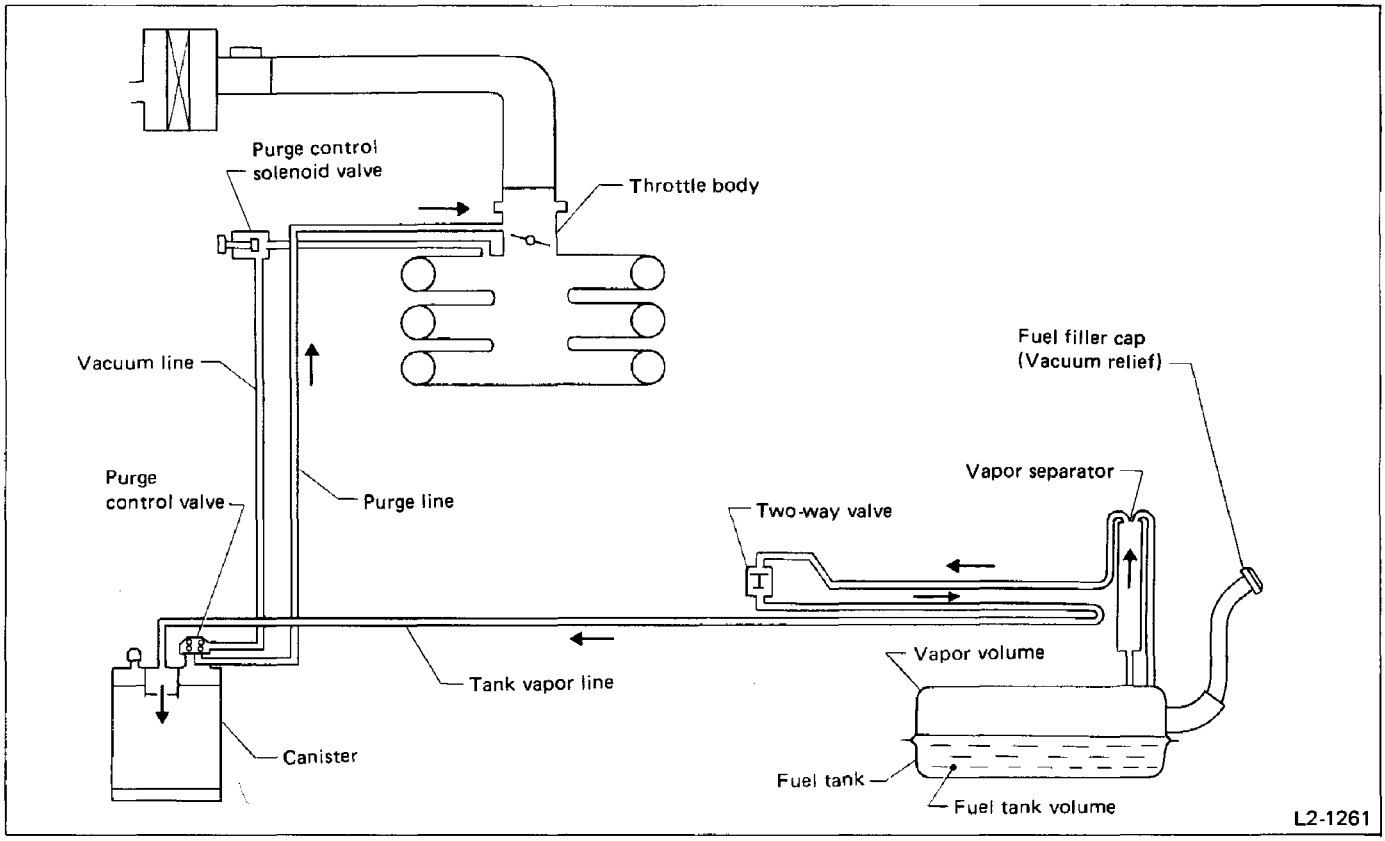

Fig. 9 2700 cc

CANISTER

The purge control valve on the canister is controlled by the intake manifold vacuum. When the purge control valve is opened, the absorbed vapor is introduced from the canister into the throttle body.

When the engine is not running, the purge control valve is closed by the return spring.

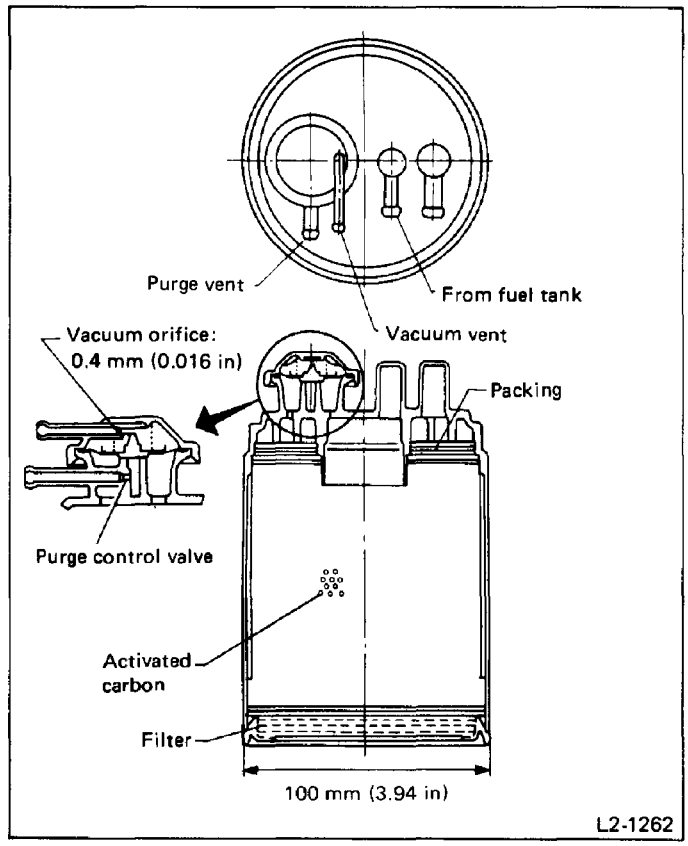

Fig. 10

TWO-WAY VALVE

The two-way valve is located in the fuel vapor line and functions to control the pressure in the fuel tank.
When the fuel tank pressure is positive above a certain point, the valve A is open to permit the fuel vapor to the canister, and when the fuel tank pressure is negative below a certain point, the valve B is open to introduce fresh air into the fuel tank.

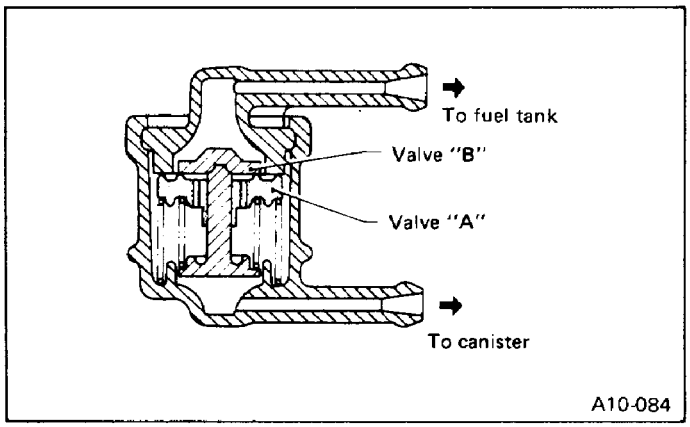

Fig. 11

FUEL SEPARATOR

The fuel separator is to prevent liquid fuel from flowing into the canister in case of abrupt cornering, etc.

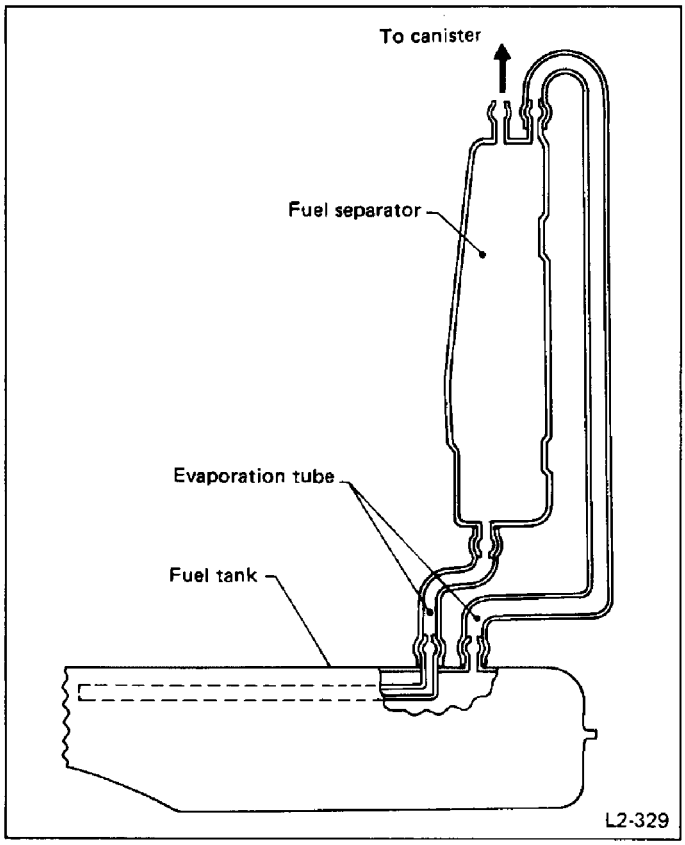

Fig. 12

FUEL CAP

The relief valve is adopted to prevent the development of vacuum in the fuel tank which may occur in case of trouble in the fuel vapor line.
In normal condition, the filler pipe is sealed at Ⓐ and at the packing pressed against the filler pipe end. As vacuum develops in the fuel tank, atmospheric pressure forces the spring down to open the valve; consequently air is led into the fuel tank controlling the inside pressure.

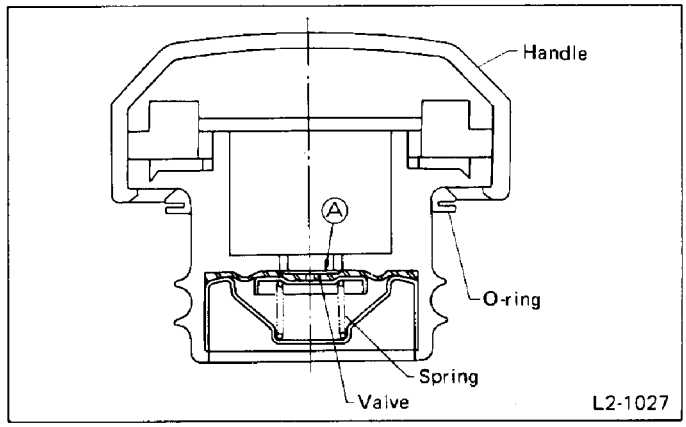

Fig. 13

INSPECTION

FUEL PIPING

Check fuel piping and connections for leakage.

EVAPORATION LINE FROM FUEL TANK TO CANISTER

1) Remove fuel filler cap.
2) Disconnect evaporation line at evaporation pipe CP.
3) Check for unobstructed evaporation line on fuel tank side except for a little resistance due to 2-way valve by blowing air into hose.
4) Check for unobstructed evaporation line on canister side with no resistance by blowing air into hose.

TWO-WAY VALVE

1) Check for air passage with slight resistance due to the valve by blowing air into the nipple on the side marked with letters "To engine".
2) Repeat the same step on the other nipple.
3) Check for the valve case with no crack. If cracked, replace it with new one.

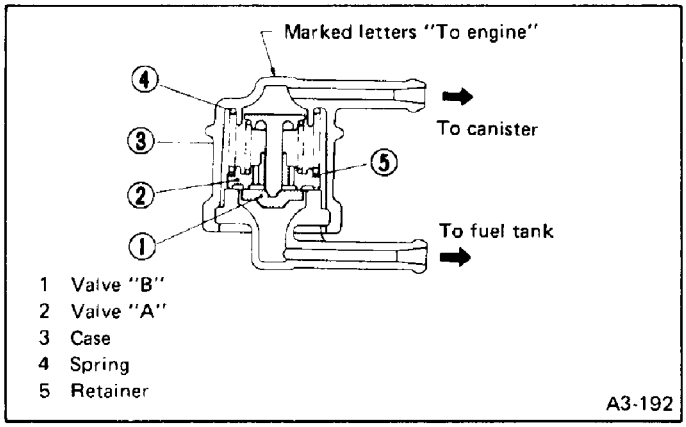

Fig. 14

PURGE LINE AND CANISTER

1) Disconnect the vacuum hose. Orally blow air through the hose to ensure that air does not leak.

2) Disconnect the purge hose. Orally blow air through the hose to ensure that air does not leak.

3) Disconnect the evaporation hose from the fuel tank side. Orally blow air through the hose to ensure that air flows.

Be careful not to suck on the hose as this causes fuel evaporating gas to enter your mouth.

4) Check the exterior of the canister to ensure that it is not cracked or scratched.

PURGE CONTROL SOLENOID VALVE

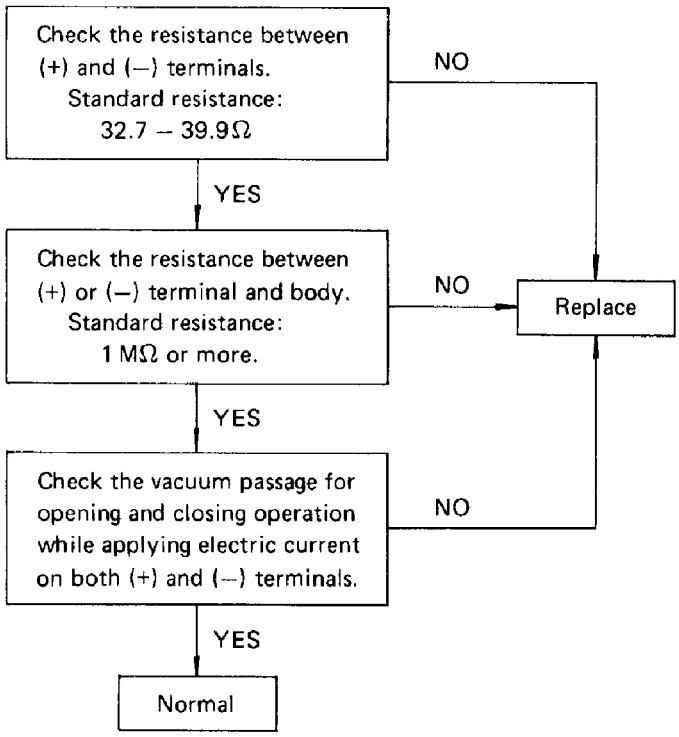

Usually (when the current is OFF), the plunger is forced upwards by the spring force to close the passage between Ⓐ and Ⓑ, and to open the passage between Ⓑ and Ⓒ.
When the current is ON in the solenoid, the plunger is attracted downwards to open the passage between Ⓐ and Ⓑ, and to close the passage between Ⓑ and Ⓒ.

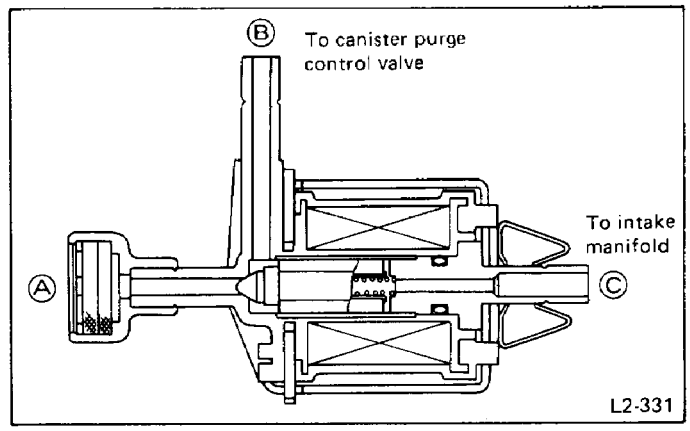

Fig. 15 1800 cc

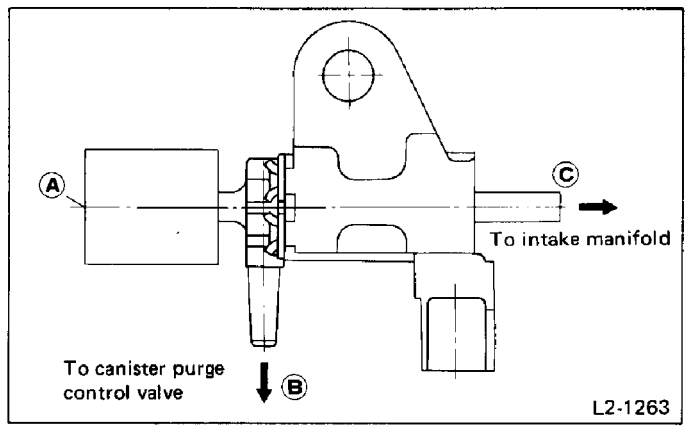

Fig. 16 2700 cc

Vacuum Fitting

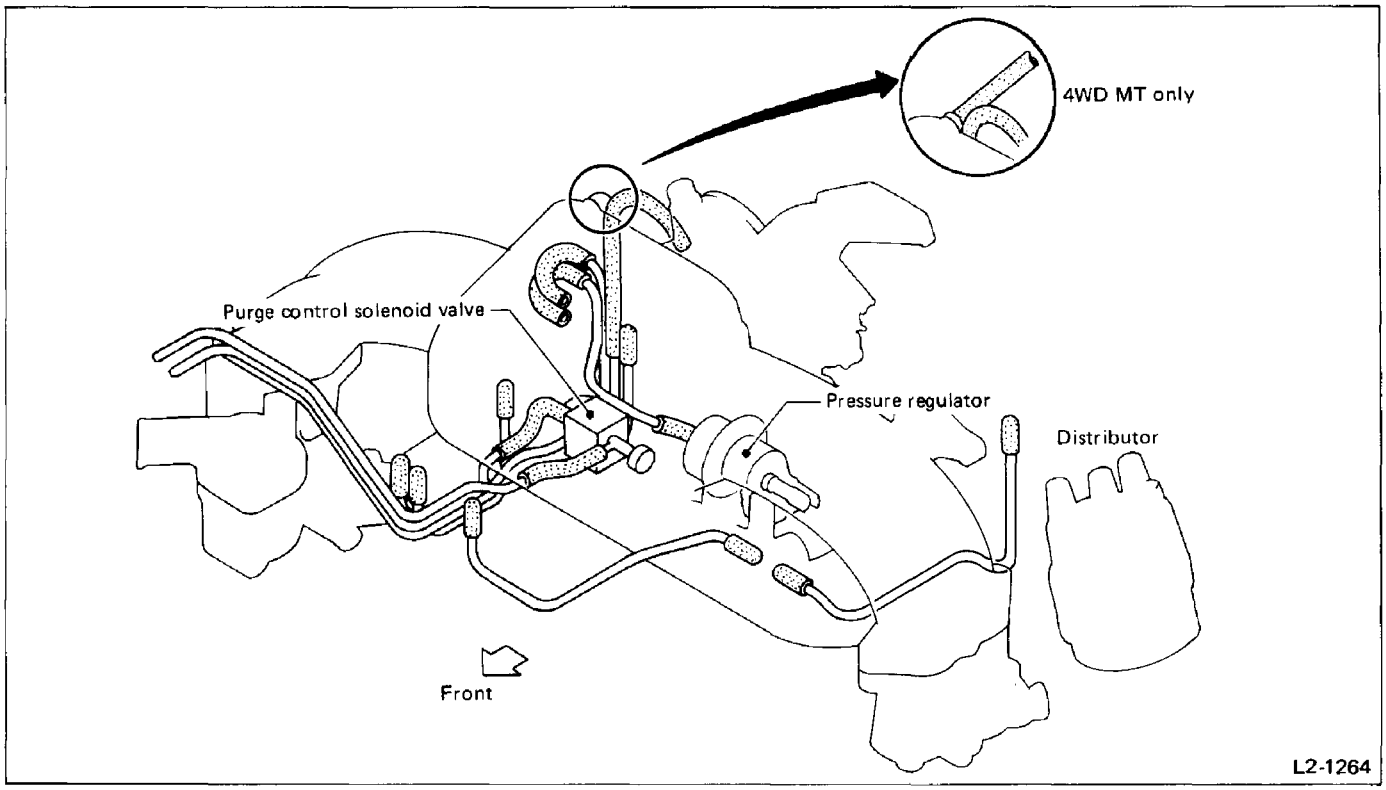

Fig. 17 1800 cc

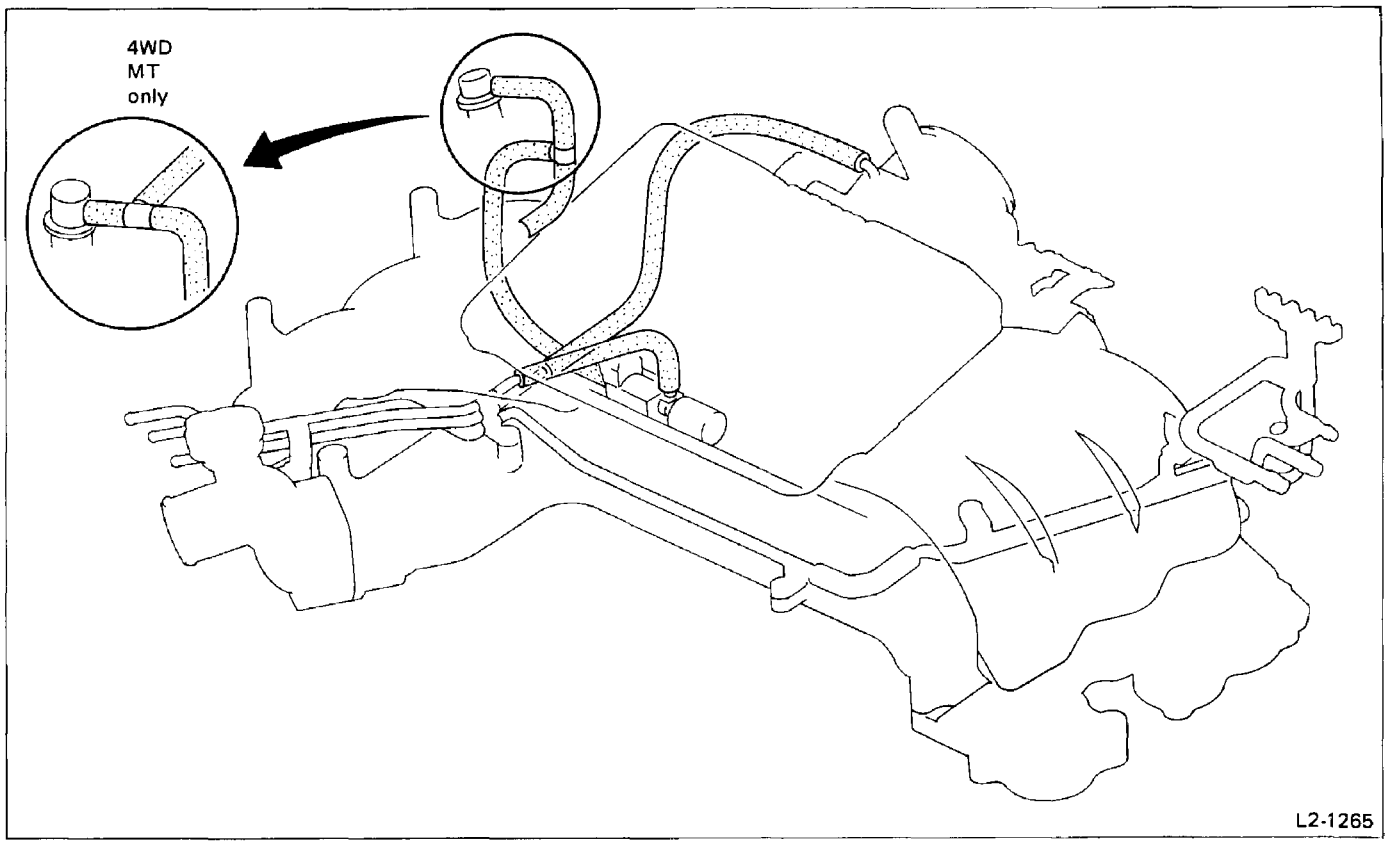

Fig. 18 2700 cc

SUBARU

1988

Page

IGNITION TIMING 2
ENGINE COMPRESSION 3
INTAKE MANIFOLD VACUUM 3
ENGINE IDLE SPEED 4
OXYGEN (O_2) SENSOR 6
COOLING SYSTEM 7
HIGH TENSION CORDS 9
CYLINDER HEAD BOLTS 9
OIL PUMP ASSEMBLY 10
WATER PUMP ASSEMBLY 14

This chapter describes major inspection and service procedures for the engine mounted on the body. For procedures not found in this chapter, refer to the service procedure section in the applicable chapter.

Ignition Timing

INSPECTION AND ADJUSTMENT

BEFORE CHECKING AND ADJUSTING IGNITION TIMING

1) Warm up the engine.
2) Make sure that the idle contact of throttle sensor is ON position. (Refer to "Chapter 2-7".)
3) Connect the test mode connector.

a. The CHECK ENGINE warning light will come on. This does not indicate a problem.
b. Ignition timing must not be adjusted and cannot be checked while the idle switch is off or the test mode connector is disconnected.

CHECKING IGNITION TIMING

1) Set gear in neutral position (MT) or "N" or "P" position (AT), and turn off the light.
2) To check the ignition timing, connect a timing light to #1 cylinder spark plug cord, adjust the engine idle speed to the specification and illuminate the timing mark with the timing light.

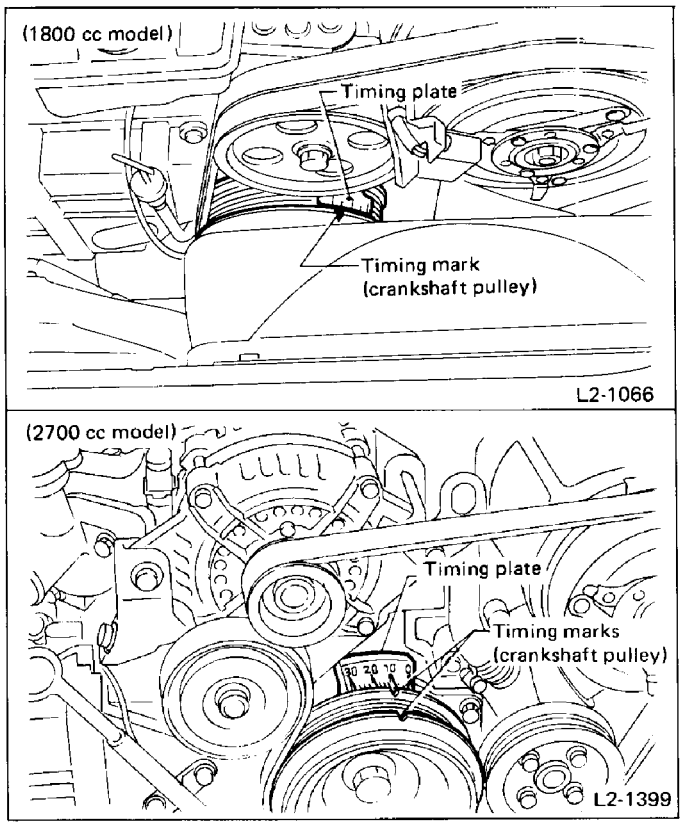

Fig. 1

If the timing is not correct, proceed to the next paragraph for adjustment.

	1800 cc model	2700 cc model
M/T	20°/700	20°/750
A/T	20°/800	20°/750

(BTDC/rpm)

Ignition timing can be set when the test mode connector is connected and the idle switch is turned ON, regardless of engine rpm. Do not check ignition timing while the connector is disconnected and the switch is OFF.

ADJUSTING IGNITION TIMING

1) Loosen the 6-mm bolts on the mounting plate of the distributor.
2) Turn the distributor housing. The timing is advanced when the distributor housing is turned clockwise and is retarded when turned counterclockwise.
3) Tighten the bolts and make sure that the timing is correct.

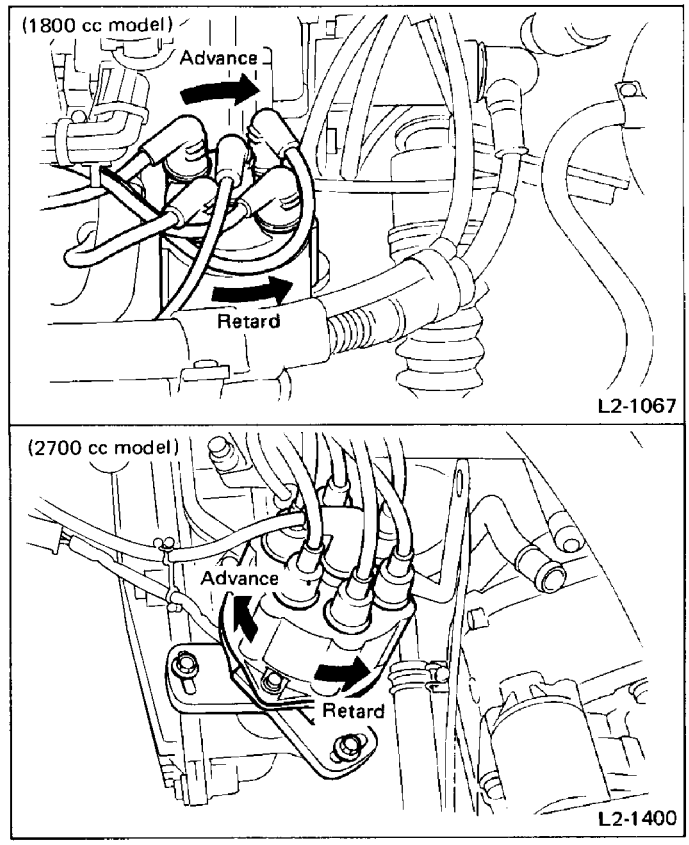

Fig. 2

AFTER CHECKING AND ADJUSTING

Be sure to disconnect the test mode connector.

Engine Compression

MEASUREMENT

1) After warming up the engine, turn off the ignition switch.
2) Make sure that the battery is fully charged.
3) Remove all the spark plugs.
4) Disconnect the harness connectors for injectors.
5) Fully open the throttle valve.
6) Check the starter motor for satisfactory performance and operation.
7) Crank the engine by means of the starter motor, and read the maximum value on the gauge when the pointer is steady.

Hold the compression gauge tight against the spark plug hole.

8) Perform at least two measurements per cylinder, and make sure that the values are correct.

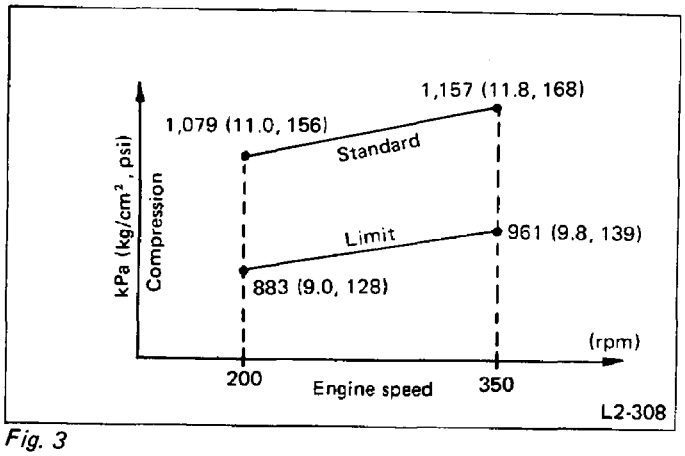

Fig. 3

Difference between cylinders:
196 kPa (2.0 kg/cm², 28 psi) or less

Intake Manifold Vacuum

MEASUREMENT

1) Warm up the engine.
2) Disconnect the vacuum hose and install the vacuum gauge to the hose fitting on the manifold.
3) Keep the engine at the idle speed and read the vacuum gauge indication.

By observing the gauge needle movement, the internal condition of the engine can be diagnosed as described in Table below.

Diagnosis of engine condition by measurement of manifold vacuum	
Vacuum gauge indication	Possible engine condition
1. Needle is steady but lower than normal position. This tendency becomes more evident as engine temperature rises.	Leakage around intake manifold gasket or throttle chamber gasket.
2. When engine speed is reduced slowly from higher speed, needle stops temporarily when it is lowering or becomes steady above normal position.	Back pressure too high, or exhaust muffler clogged.
3. Needle intermittently drops to position lower than normal position.	Leakage around cylinder.
4. Needle drops slightly and intermittently from normal position.	Leaking valves or irregular valve clearances.
5. Needle drops suddenly and intermittently from normal position.	Sticky valves.
6. When engine speed is gradually increased, needle begins to vibrate rapidly at certain speed, and then vibration increases as engine speed increases.	Weak or broken valve springs.
7. Needle vibrates above and below normal position in narrow range.	Incorrect idle adjustment.

Engine Idle Speed

INSPECTION AND ADJUSTMENT

1800 cc model

a. Make sure that the ignition timing is correctly adjusted prior to this inspection.
b. Set the gear position at "Neutral" for MT, or "P" or "N" for AT.
c. Before inspecting the engine idle speed, ensure that:
(1) Vacuum hoses, blow-by hoses, rocker cover, oil filler cap, etc. which are connected to the intake system, are tight and secure.
(2) The engine has warmed up sufficiently and O_2 sensor has also been warmed up at an engine speed of 2,500 rpm for approximately one minute after engine warm-up.
(3) Disconnect the purge hose(s) at the opposite side of canister and then clog it(them).

1) Before inspection, ensure that the auxiliary air valve is completely closed.
2) Adjust the idle speed by using the idle adjusting screw located on the throttle body.

Idle speed (rpm)	MT	700 ± 100
	AT	800 ± 100
CO contents	(%)	0.1, max
HC contents	(ppm)	200, max

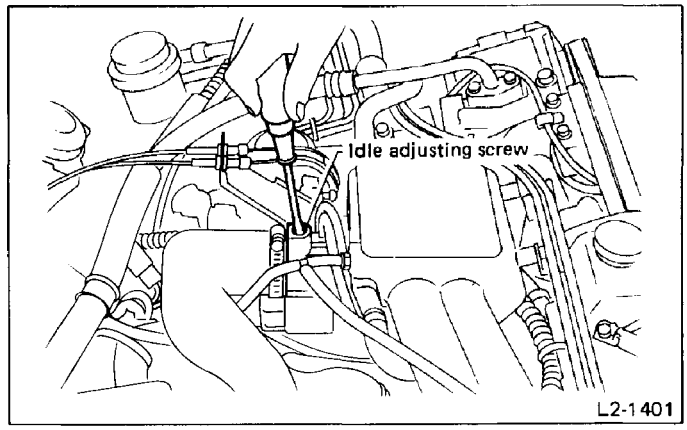

Fig. 4

3) Inspecting the exhaust gas.
(1) After adjusting both ignition timing and idling speed, check both the idle CO and HC contents in the exhaust gas.

The CO content adjusting screw of the air flow meter need not be adjusted as the air-fuel ratio is feedback controlled.

(2) If the CO and HC contents are outside specifications, check and correct the problem using the following chart as a guide.

Troubleshooting

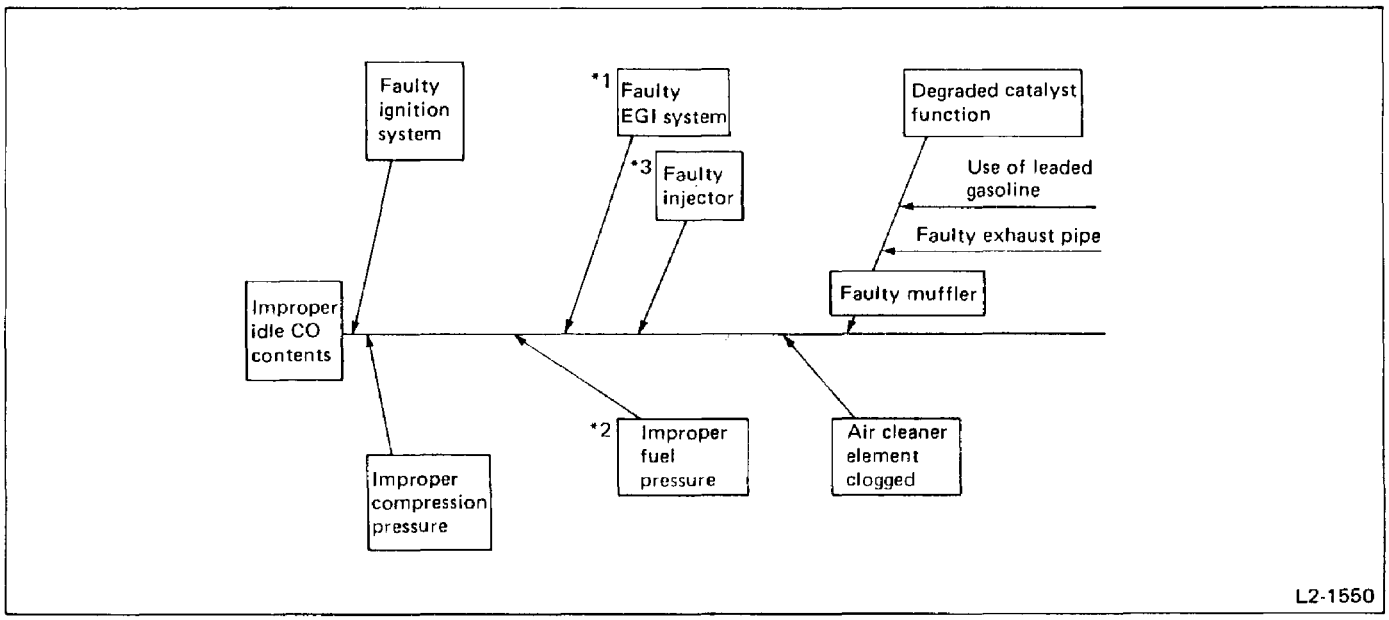

Fig. 5

*1: Check the MPFI system.
Connect a jumper wire and check to see if the CHECK ENGINE warning light flickers with the engine at idle. If it does, the MPFI system is functioning properly.
*2: Check the fuel pressure.
*3: Check fuel injectors.
a: Remove the fuel injector and direct air at a pressure of approximately 196 kPa (2 kg/cm^2, 28 psi) to see if air leaks at the nozzle tip. If air leaks, replace the injector.
b: The injector is faulty.

2700 cc model

Refer to Chapter 2-7 "Throttle Chamber Assembly".

Oxygen (O_2) Sensor

REPLACEMENT

Oxygen (O_2) sensor is one of the important emission control parts. Therefore, replace it as follows only when it is damaged by external force, or if it seems to be out of order according to troubleshooting etc.

REMOVAL

1) Disconnect oxygen (O_2) sensor cord.
2) Apply SUBARU CRC (004301003) or its equivalent to threaded portion of oxygen (O_2) sensor, and leave it for one minute or more.
3) Loosen oxygen (O_2) sensor by turning it 10 to 40 degrees with SOCKET (499990110).

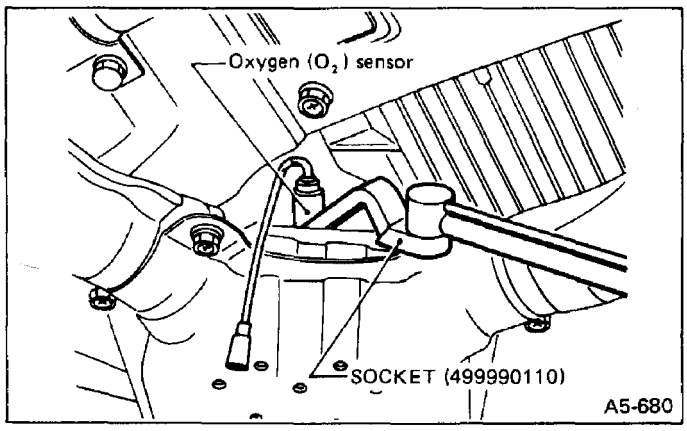

Fig. 6

4) Apply SUBARU CRC (004301003) to threaded portion of oxygen (O_2) sensor again, and leave it for one minute or more.
5) Remove oxygen (O_2) sensor by using socket and wrench.

When removing, do not force oxygen (O_2) sensor especially when exhaust pipe is cold; otherwise it will damage the exhaust pipe.

INSTALLATION

1) Apply anti-seize compound ("SS-30" made by JET-LUBE Inc. in U.S.A. or its equivalent) only to threaded portion of oxygen (O_2) sensor to make the next removal easier.

Never apply anti-seize compound to protector of oxygen (O_2) sensor.

2) By using socket and torque wrench, install oxygen (O_2) sensor onto front exhaust pipe by tightening it to the specified torque.

Torque [oxygen (O_2) sensor]:
25 – 34 N·m (2.5 – 3.5 kg-m, 18 – 25 ft-lb)

3) Securely connect oxygen (O_2) sensor cord.

Cooling System

INSPECTION

SYSTEM COMPONENTS

Repair or replace parts which are found faulty.

1800 cc model

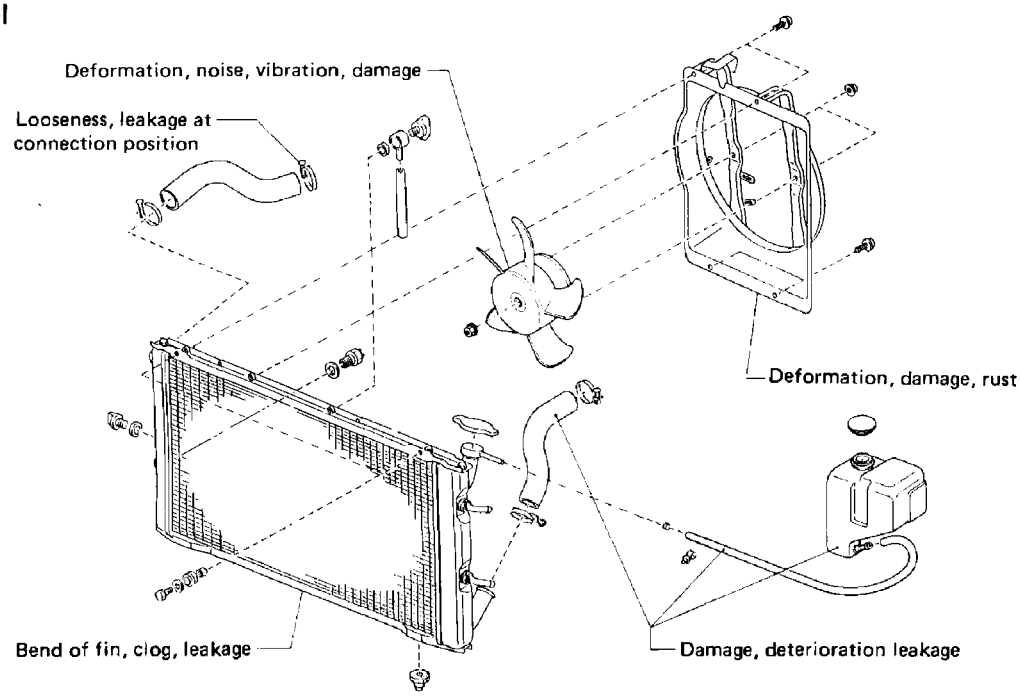

L2-1069

2700 cc model

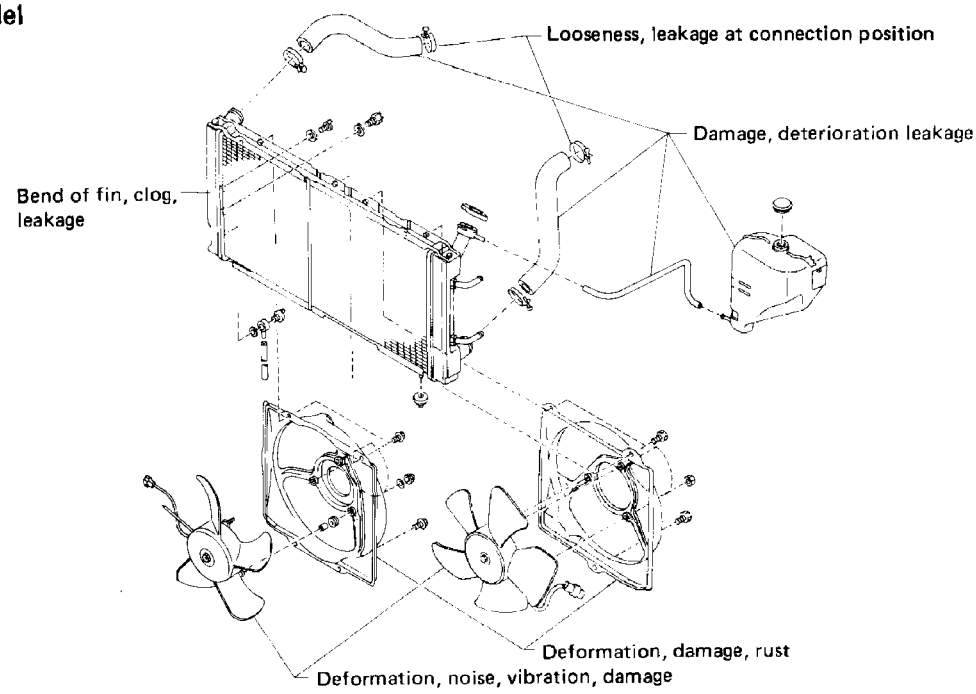

L2-1403

Fig. 7

RADIATOR CAP OPENING PRESSURE

1) Attach radiator cap to tester.
2) Increase pressure until tester gauge pointer stops. Radiator cap is functioning properly if it holds the service limit pressure for five to six seconds.

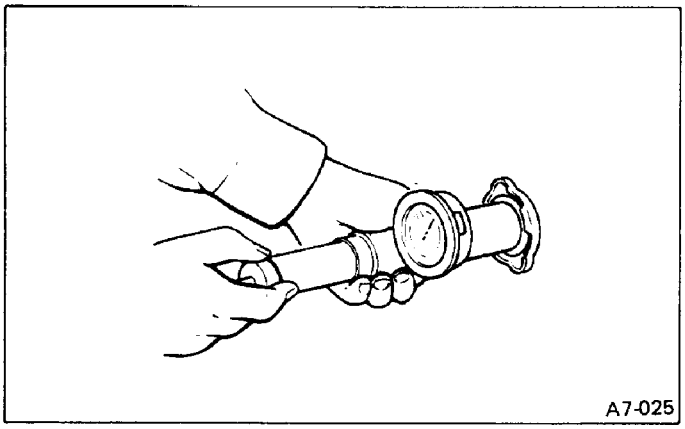

Fig. 8

Standard pressure:
78 – 98 kPa (0.8 – 1.0 kg/cm^2, 11 – 14 psi)
Service limit pressure:
69 kPa (0.7 kg/cm^2, 10 psi)

Be sure to remove foreign matter and rust from the cap in advance; otherwise, results of pressure test will be incorrect.

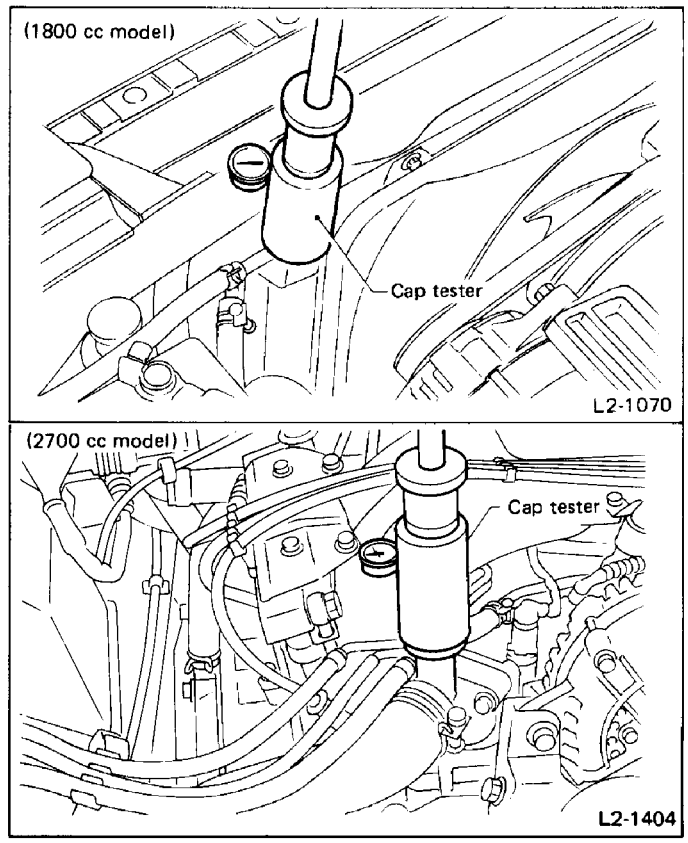

Fig. 9

a. Engine should be off.
b. Wipe water from check points in advance.
c. Be careful to prevent cooling water from spurting out when removing tester.
d. Be careful also not to deform filler neck of radiator when installing or removing tester.

WATER LEAKAGE FROM RADIATOR

1) • Remove radiator cap, top off radiator, and attach tester to radiator in place of cap. (1800 cc model)
• Remove filler cap, and attach tester to thermostat cover in place of cap. (2700 cc model)
2) Apply a pressure of 157 kPa (1.6 kg/cm^2, 23 psi) to radiator to check if:
(1) Water leaks at/around radiator.
(2) Water leaks at/around hoses or connections.

COOLANT

1) Check coolant level.
When the engine is cool, check and add coolant on reserve tank side.
Be careful not to confuse the reserve tank cap which is green and the window washer cap which is blue.
(1) If coolant level is close to the "LOW" mark, add genuine SUBARU Coolant up to the "FULL" mark.
(2) If reserve tank is empty, check coolant level in radiator and first add coolant up to filler necks in radiator. Then, perform step (1).

On 2700 cc model, coolant filler is located on top of engine.

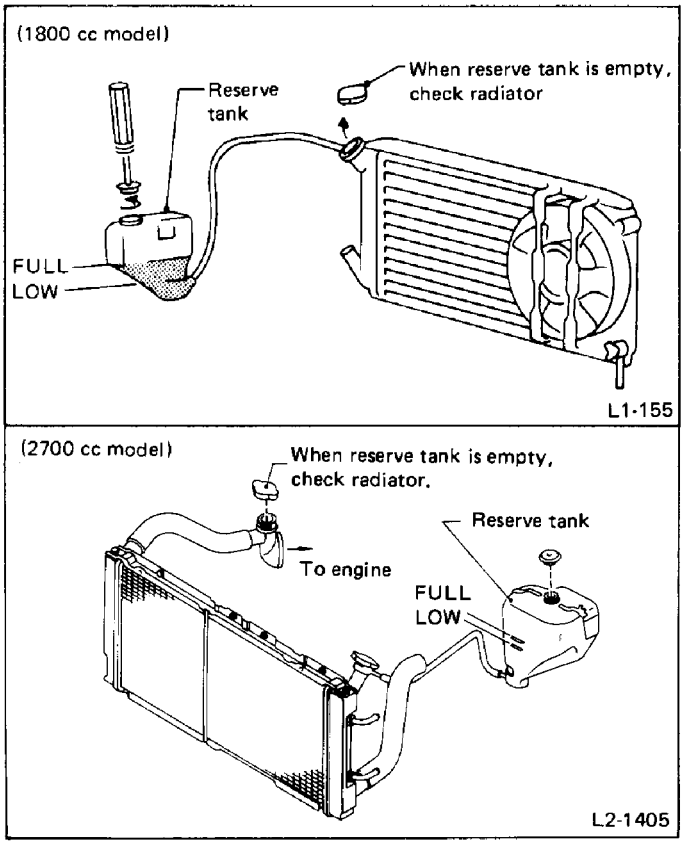

Fig. 10

2) Replacement work.
Refer to 1-5 "Periodic Maintenance Services".

High Tension Cords

INSPECTION

Check for:
1) Damage to cords, deformation, burning or rust formation of terminals.
2) Resistance values of cords.

Unit: [kΩ]

	1800 cc model	2700 cc model
Distributor cord	2.43 – 5.67	2.43 – 5.67
#1 cord	9.87 – 23.03	10.86 – 25.33
#2 cord	2.83 – 6.61	5.67 – 13.24
#3 cord	11.21 – 26.16	11.24 – 26.23
#4 cord	2.27 – 5.29	4.52 – 10.55
#5 cord	–	11.43 – 26.68
#6 cord	–	2.60 – 6.07

Cylinder Head Bolts

(1800 cc engine only)

RETORQUING

After completing engine ASSY and mounting engine on car, be sure to retighten cylinder head bolts.
1) Warm up engine.
2) After engine has cooled down, remove right and left valve rocker covers.
3) Loosen intake manifold mounting bolts next to cylinders No. 1 and No. 3 by 60°. Do not loosen the manifold mounting bolts next to cylinders No. 2 and No. 4.

Do not loosen the mounting bolts more than 90°, or water may leak.

4) Loosen bolt at position ① in Figure, and apply oil to the thread. Repeat "loosen and tighten" operation four to five times within the 60° range for a better fit, then tighten bolt to the specified torque.

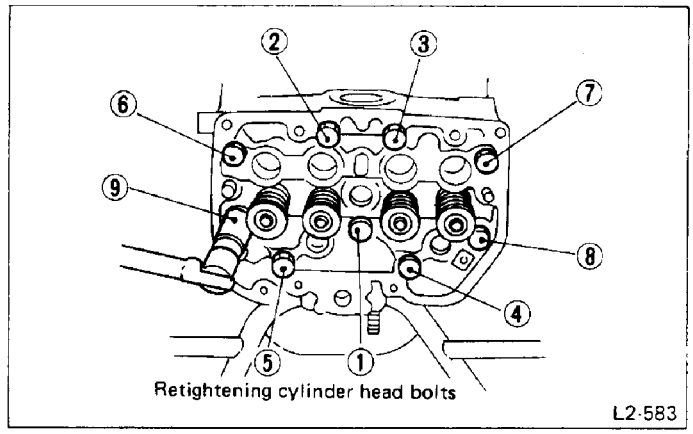

Fig. 11

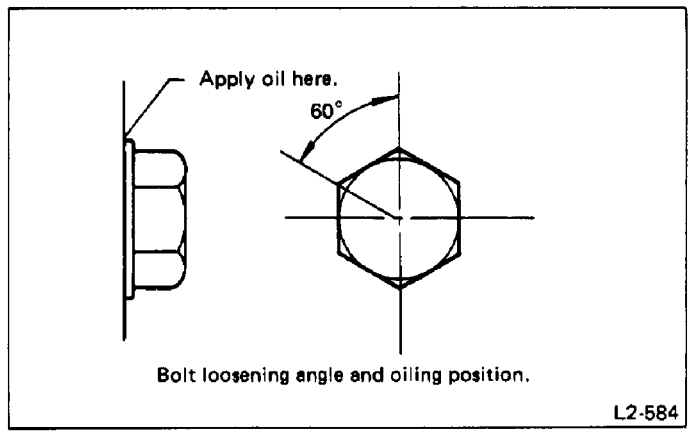

Fig. 12

Specified torque:
64 N·m (6.5 kg-m, 47 ft-lb)

Tool Part No.	Tool Part Name
499987200	Socket wrench (17)

5) Similarly, retighten each bolt in sequence from ② to ⑨ as shown in Figure.
Finally, retighten bolt ① to the specified torque without loosening.
6) After retightening right and left cylinder head bolts, tighten mounting bolts of intake manifolds.

Oil Pump Assembly

1800 cc model

REMOVAL

1) Open the front hood.
2) Disconnect the ground cable from the battery.
3) Position the lift arm and raise the vehicle with a jack.
4) Remove the undercovers.
5) Remove the bolts from the lower side of the radiator fan shroud.

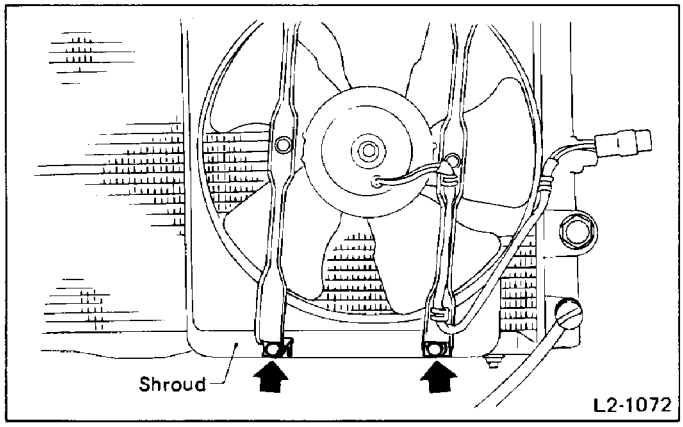

Fig. 13

6) Lower the vehicle.
7) Remove the radiator fan shroud.
(1) Disconnect the fan motor connector.
(2) Remove the bolts from the upper side of the shroud.

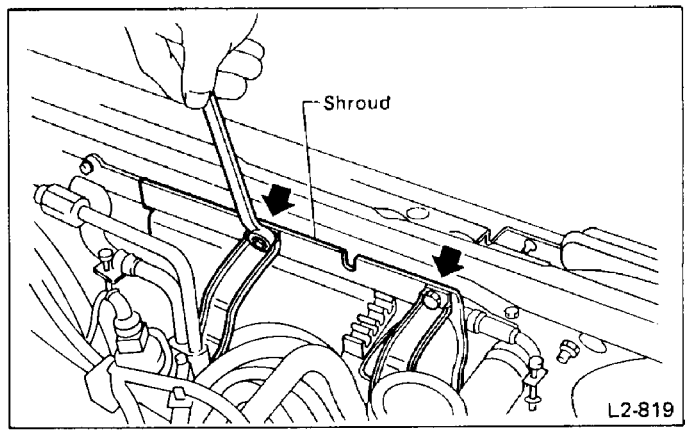

Fig. 14

8) Remove the alternator and V-belt.

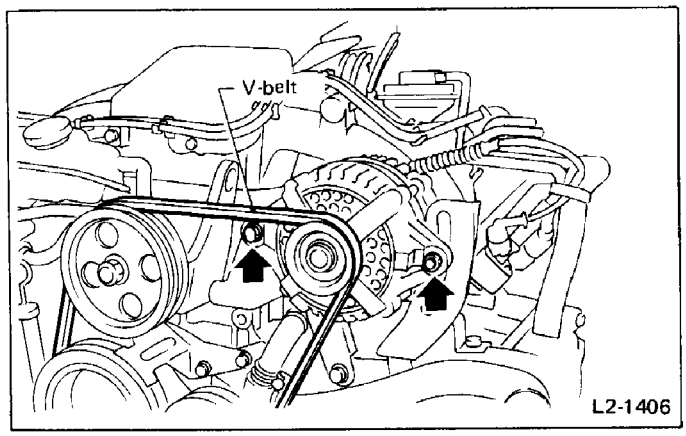

Fig. 15

9) Remove the oil level gauge guide and disconnect the oil pressure gauge harness.
10) Remove the water pump pulley.
11) Remove air intake boot.
12) Attach the STOPPER [498277000 (MT)/498497000 (AT)] to flywheel or torque converter to prevent it from turning. Remove the crank pulley.

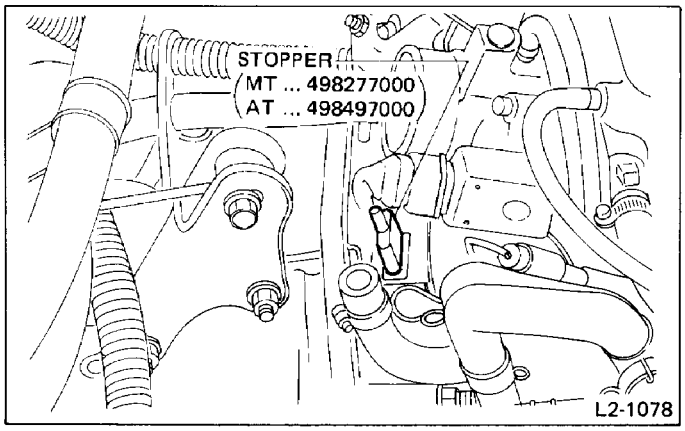

Fig. 16

13) Remove the LH, RH and FR belt covers, in that order.
14) Remove the right timing belt.

Draw an arrow on the left and right belts with a piece of chalk to indicate the direction of advance.

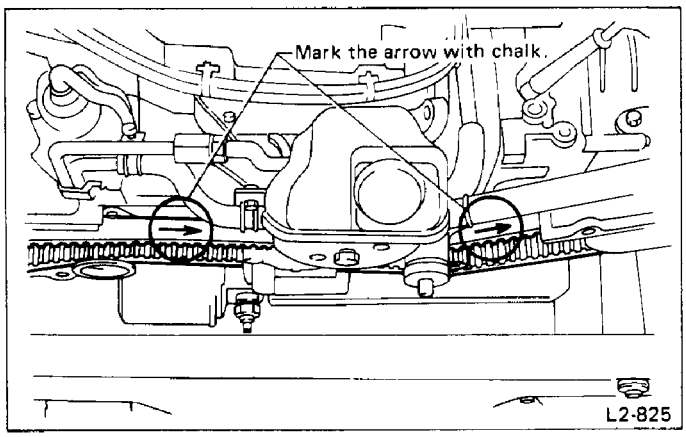

Fig. 17

(1) Loosen the two bolts which secure the tensioner. Move the tensioner in the direction which loosens it and temporarily tighten the bolts.

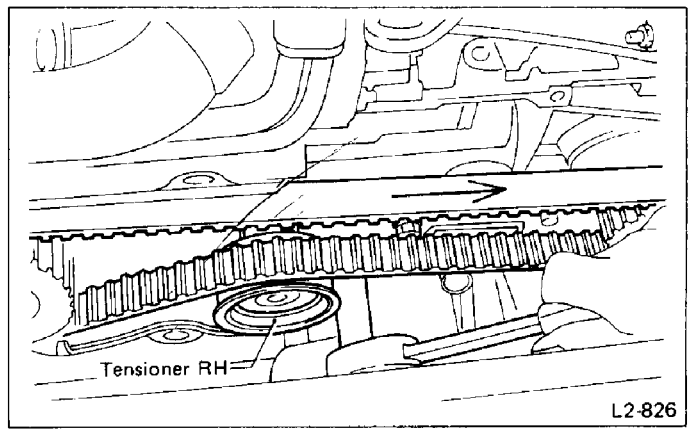

Fig. 18

(2) Remove the right timing belt.
15) Remove the crankshaft sprocket.
16) Remove the left timing belt.
(1) Loosen the two bolts which secure the tensioner. Move the tensioner in the direction which loosens it and temporarily tighten the bolts.

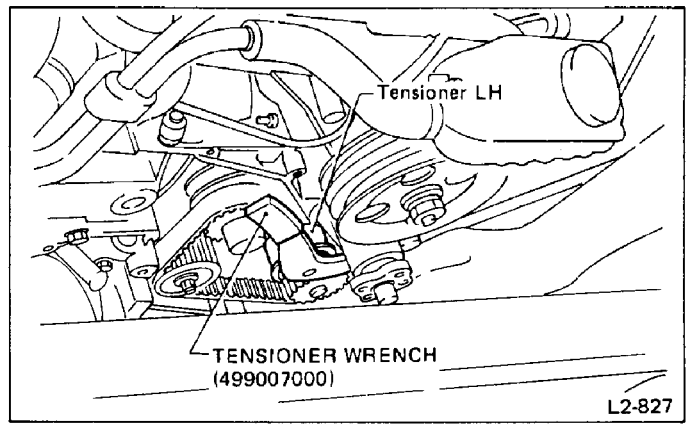

Fig. 19

Be careful not to scratch the crankshaft with a tensioner wrench.

(2) Remove the left timing belt.

17) Remove the belt idler.

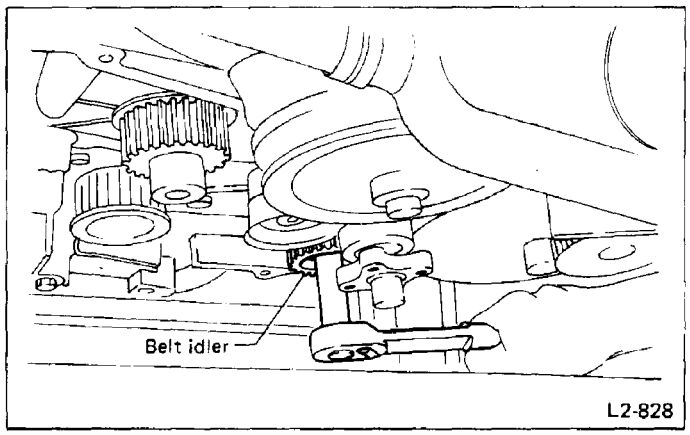

Fig. 20

18) Using the CAMSHAFT SPROCKET WRENCH (499207000), remove the left camshaft sprocket.
19) Remove the belt cover No. 2 (LH) and the rear belt cover.
20) Remove the oil pump ASSY.

REINSTALLATION

1) Install the oil pump ASSY.

Replace the gasket with a new one.

2) Install the belt cover (RR) and the belt cover No. 2 (LH).
3) Install the camshaft sprocket on the right and left camshafts. Lock the camshaft using the CAMSHAFT SPROCKET WRENCH (499207000).
4) Install the timing belt. (Refer to Chapter "2-3.")

Timing belts should be replaced when engine is cold.

5) Install the belt cover (FR) on the cylinder block.
Install the belt cover seals (FR and RR) and the belt cover plug on the belt cover (FR) in advance.

Before installing the belt cover (FR), check that there are no bolts, washers, etc. left in the cover.

6) Install the crank pulley.
Lock the crank pulley using the STOPPER [49827700 (MT)/ 498497000 (AT)].

Tightening torque:
93 – 103 N·m (9.5 – 10.5 kg-m, 69 – 76 ft-lb)

Apply a coat of engine oil to the crank pulley bolts before installation.

7) Install the left and right belt covers.
8) Install the oil level gauge guide.
9) Install the water pump pulley.
10) Install the alternator and V-belt, then adjust belt tension.
11) Install the radiator fan shroud and connect the connector.
12) Fasten the canister hose, etc. to the clamps.
13) Install the timing hole plug.
14) Lower the vehicle.
15) Connect the ground cable to the battery.
16) Start the engine.
17) Add engine oil to the oil pan.
18) Close the front hood and release the lift arm.

2700 cc model

REMOVAL

1) Open the front hood.
2) Disconnect the ground cable from the battery.
3) Position the lift arm and raise the vehicle with a jack.
4) Remove the bolts from the lower side of the radiator and condenser fan shroud.

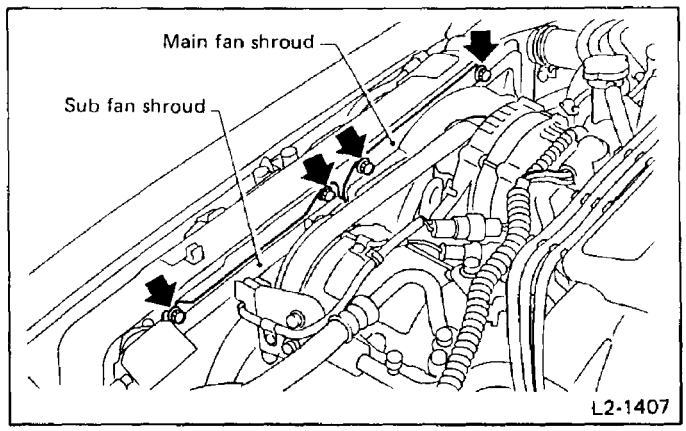

Fig. 21

5) Lower the vehicle.
6) Disconnect the radiator and condenser fan motor connector.
7) Remove the bolts from the upper side of the shroud.

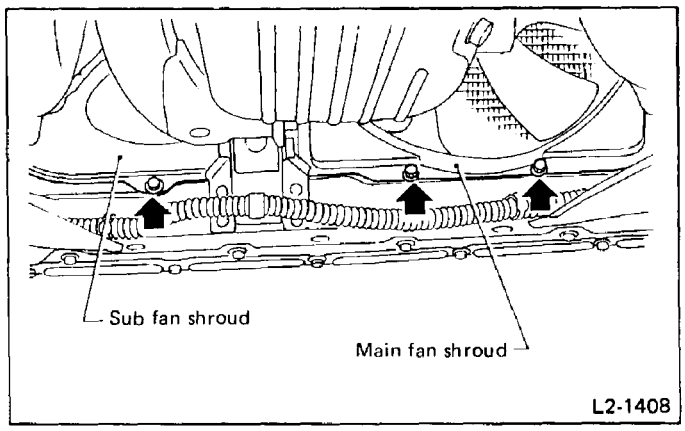

Fig. 22

8) Remove the radiator fan shroud ASSY. While moving condenser fan shroud ASSY in the direction in which radiator fan shroud ASSY was installed, lift it out.
9) Remove the pulser ASSY (A/C).
10) Loosen the tension pulley lock nut to release V-belt tension. When removing V-belt, check that adjuster bolt is turned counterclockwise fully in the direction which loosens the belt.

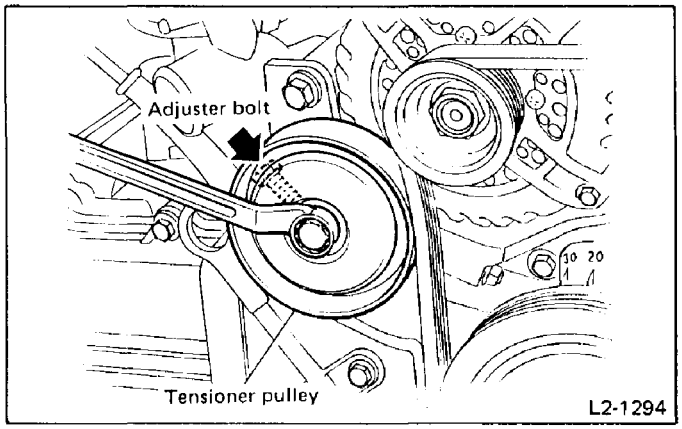

Fig. 23

11) Remove the alternator, alternator bracket and tension pulley (RH).
12) Remove the water pump pulley.
13) Attach the STOPPER [49827700 (MT)/498497000 (AT)] to flywheel or torque converter to prevent it from turning. Remove the crank pulley.
14) Remove the LH, RH and CTR belt covers in that order.
15) Remove the right timing belt.

Draw an arrow on the left and right belts with a piece of chalk to indicate the direction of advance.

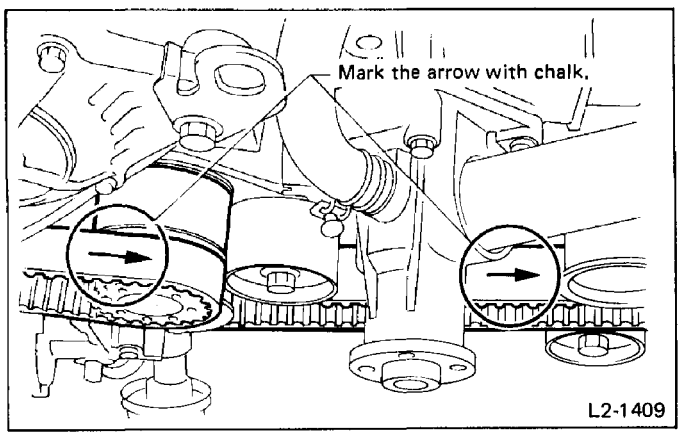

Fig. 24

(1) Loosen the two bolts which secure the tensioner. Move the tensioner in the direction which loosen it and temporarily tighten the bolts.

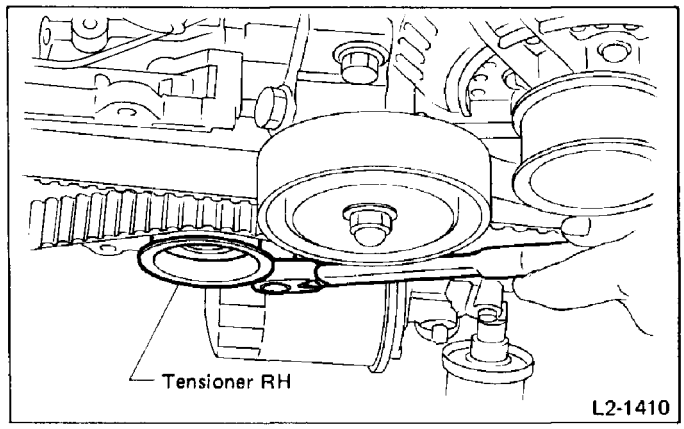

Fig. 25

(2) Remove the right timing belt.
16) Remove the crankshaft sprocket.
17) Remove the left timing belt.
(1) Remove idler pulley.
(2) Remove plug rubber and then remove plug screw from belt tension adjuster lower side.

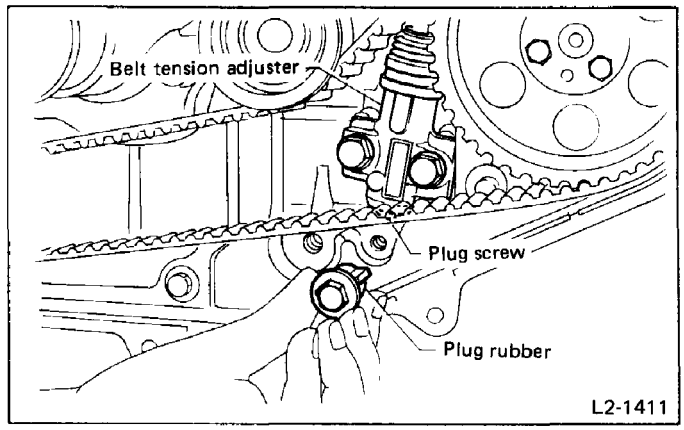

Fig. 26

(3) Insert a flat-blade screwdriver into hole on bottom of belt tension adjuster. Turn screw clockwise to compress rubber boot. Install BELT ADJUSTER STOPPER (13082AA000), then remove belt tension adjuster.

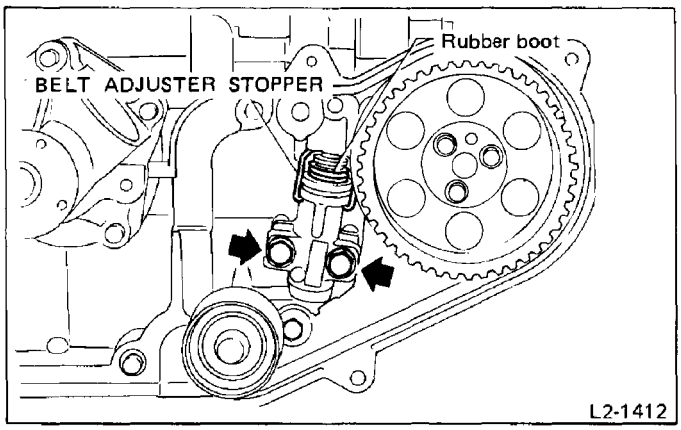

Fig. 27

(4) Remove the left timing belt.
18) Remove the oil pump ASSY.

REINSTALLATION

1) Install the oil pump ASSY.

Replace the gasket with a new one.

2) Install the timing belt. (Refer to Chapter "2-3.")

Timing belts should be replaced when engine is cold.

3) Install the belt cover on the cylinder block.
4) Install the crank pulley.
Lock the crank pulley using the STOPPER [49827700 (MT)/ 498497000 (AT)].

Tightening torque:
89 – 107 N·m (9.1 – 10.9 kg-m, 66 – 79 ft-lb)

Apply a coat of engine oil to the crank pulley bolts before installation.

5) Install the water pump pulley.
6) Install the alternator bracket, tension pulley and alternator.
7) Install V-belt, then adjust belt tension. (Refer to Chapter "2-3.")
8) Install the condenser and radiator fan shroud and connect the fan motor connectors.
9) Install the pulser ASSY (A/C).
10) Connect the ground cable to the battery.
11) Add engine oil to the oil pan.
12) Start the engine.
13) Close the front hood and release the lift arm.

Water Pump Assembly

1800 cc model

REMOVAL

1) Open the front hood.
2) Disconnect the ground cable from the battery.
3) Drain the coolant completely.
4) Remove the alternator and V-belt.
5) Disconnect the radiator outlet hose.

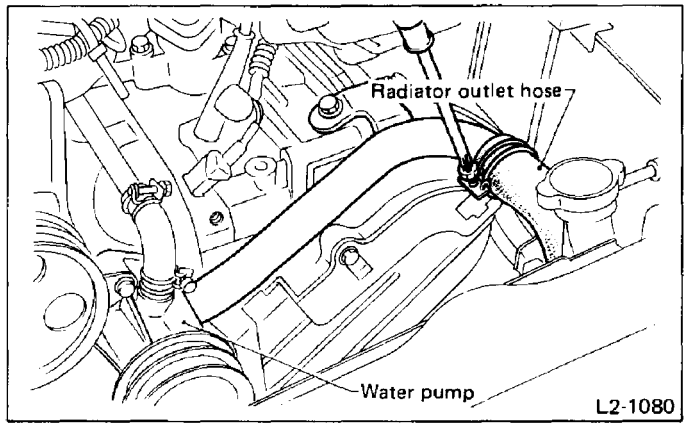

Fig. 28

6) Disconnect the water by-pass hose from the pipe.

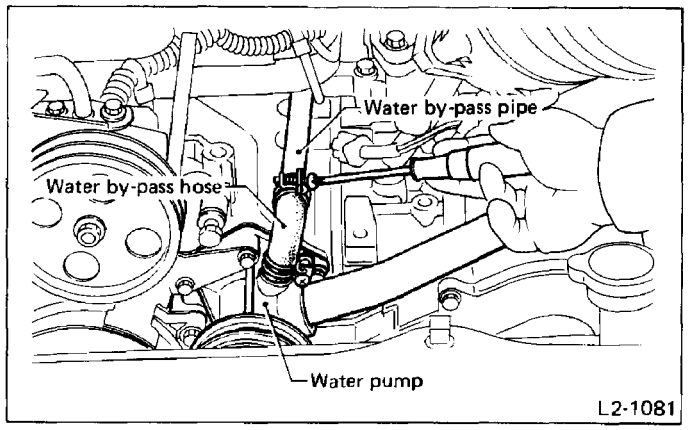

Fig. 29

7) Unfasten clips which secure the oil pressure switch harness.
8) Remove the oil level gauge guide.
9) Remove the water pump pulley.
10) Using the stopper, remove the crank pulley.

11) Disconnect the water pipe.

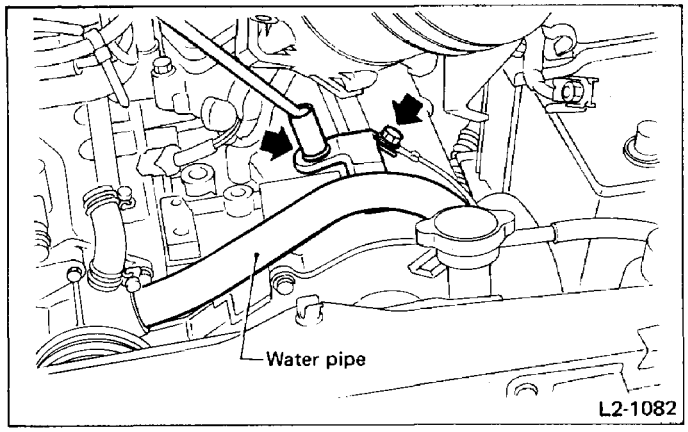

Fig. 30

12) Remove the LH, RH and FR belt covers, in that order.
13) Remove the water pump ASSY and timing plate.

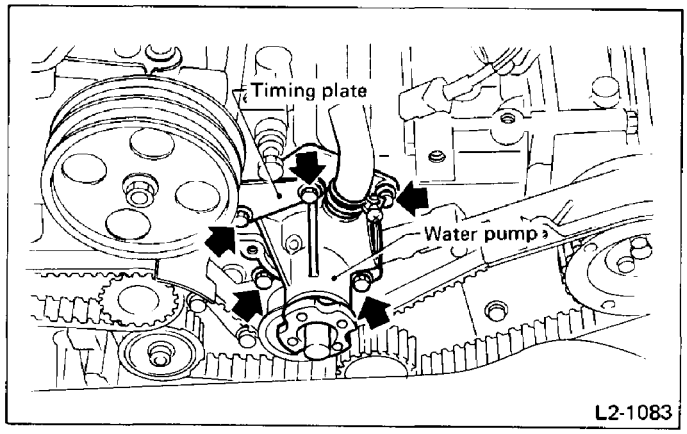

Fig. 31

REINSTALLATION

1) Install the water pump ASSY and timing plate.

Replace the gasket with a new one.

2) Install the FR, RH and LH belt covers.
3) Connect the water pipe.
4) Install the crank pulley.
5) Install the water pump pulley.
6) Install the oil level gauge guide.
7) Clamp the oil pressure switch harness clip.
8) Connect the water by-pass hose to the pipe.
9) Connect the radiator outlet hose.
10) Install the alternator and V-belt.
11) Add coolant in the radiator.
12) Connect the ground cable to the battery.
13) Start the engine and check the coolant level.
14) Close the front hood and release the lift arm.

2700 cc model

REMOVAL

1) Open the front hood.
2) Disconnect the ground cable from battery.
3) Drain the coolant completely.
4) Disconnect the radiator outlet hose and air vent tube.

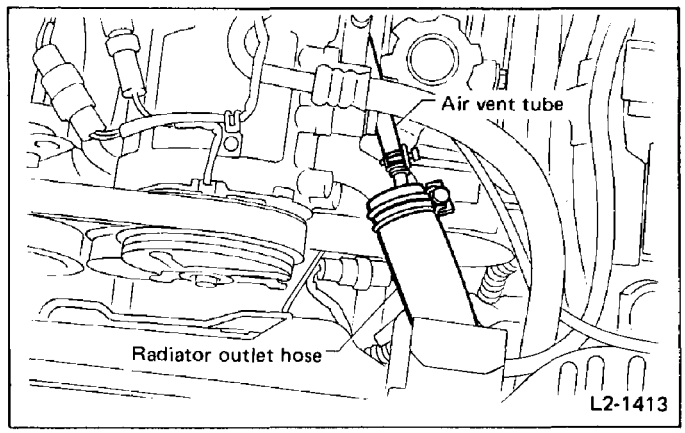

Fig. 32

5) Remove the pulser ASSY (A/C).
6) Remove the V-belt. (Refer to Chapter 2-2 "Oil Pump Assembly".)
7) Remove compressor, alternator and alternator bracket.
8) Disconnect the water by-pass hose and water pipe.

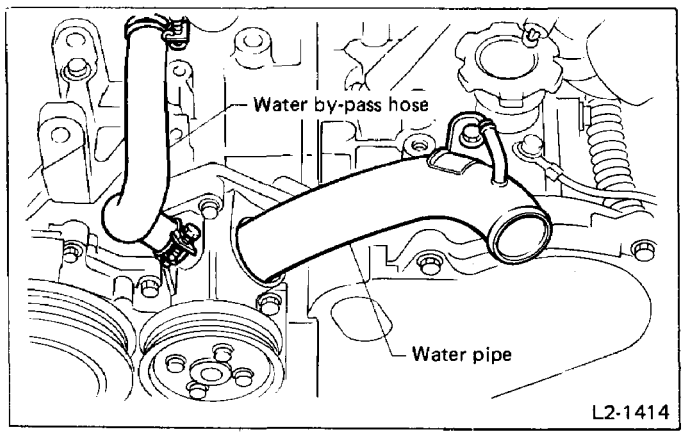

Fig. 33

9) Remove the water pump pulley.
10) Using the STOPPER [49827700 (MT)/498497000 (AT)], remove the crank pulley.
11) Remove the LH, RH and CTR belt covers, in that order.

12) Remove the water pump ASSY.

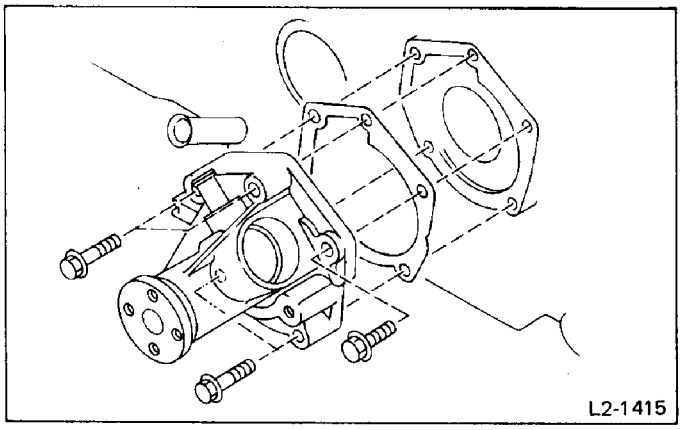

Fig. 34

RE INSTALLATION

1) Install the water pump ASSY.

Replace the gasket with a new one.

2) Install the CTR, RH and LH belt covers.
3) Connect the water pipe and water by-pass hose.
4) Install the crank pulley.
5) Install the water pump pulley.
6) Install alternator bracket, alternator and compressor.
7) Install V-belt, then adjust belt tension. (Refer to Chapter "2-3".)
8) Install the pulser ASSY (A/C).
9) Connect the radiator outlet hose and air vent tube.
10) Add coolant in the radiator.
11) Connect the ground cable to the battery.
12) Start the engine and check the coolant level.
13) Close the front hood and release the lift arm.

SUBARU

1988

	Page 1800 cc	2700 cc
MECHANISM AND FUNCTION	2	53
General	2	53
Valve Mechanism	4	56
SPECIFICATIONS AND SERVICE DATA	6	58
Specifications	6	58
Service Data	7	59
COMPONENT PARTS	11	63
Cylinder Block and Oil Pan	11	63
Crankshaft and Piston	12	64
Cylinder Head and Flywheel Housing	13	65
Camshaft and Timing Belt	14	66
Belt Cover	15	67
Electrical Equipment	16	68
SERVICE PROCEDURE	17	69
General Precautions	17	69
Timing Belt and Belt Cover	17	69
Camshaft and Valve Rocker	22	77
Cylinder Head	27	81
Valve and Valve Spring	31	85
Cylinder Block	33	86
Crankshaft and Piston	41	96
TROUBLESHOOTING	48	102
Engine Trouble in General	48	–
Engine Noise	51	–

1800 cc Engine
MECHANISM AND FUNCTION

General

The SUBARU XT houses a horizontally-opposed 4-cylinder, 4-stroke cycle, liquid cooled OHC gasoline engine. This well-balanced engine, adopting a horizontally opposed piston arrangement, is made of an aluminium alloy, and is light weight and compact in construction. This engine also adopts the OHC (Over-Head Camshaft) system, hydraulic lash adjuster, and fuel injection system, attaining easier maintenances servicing, and reliability as well as low fuel consumption, low noise and powerful performance.

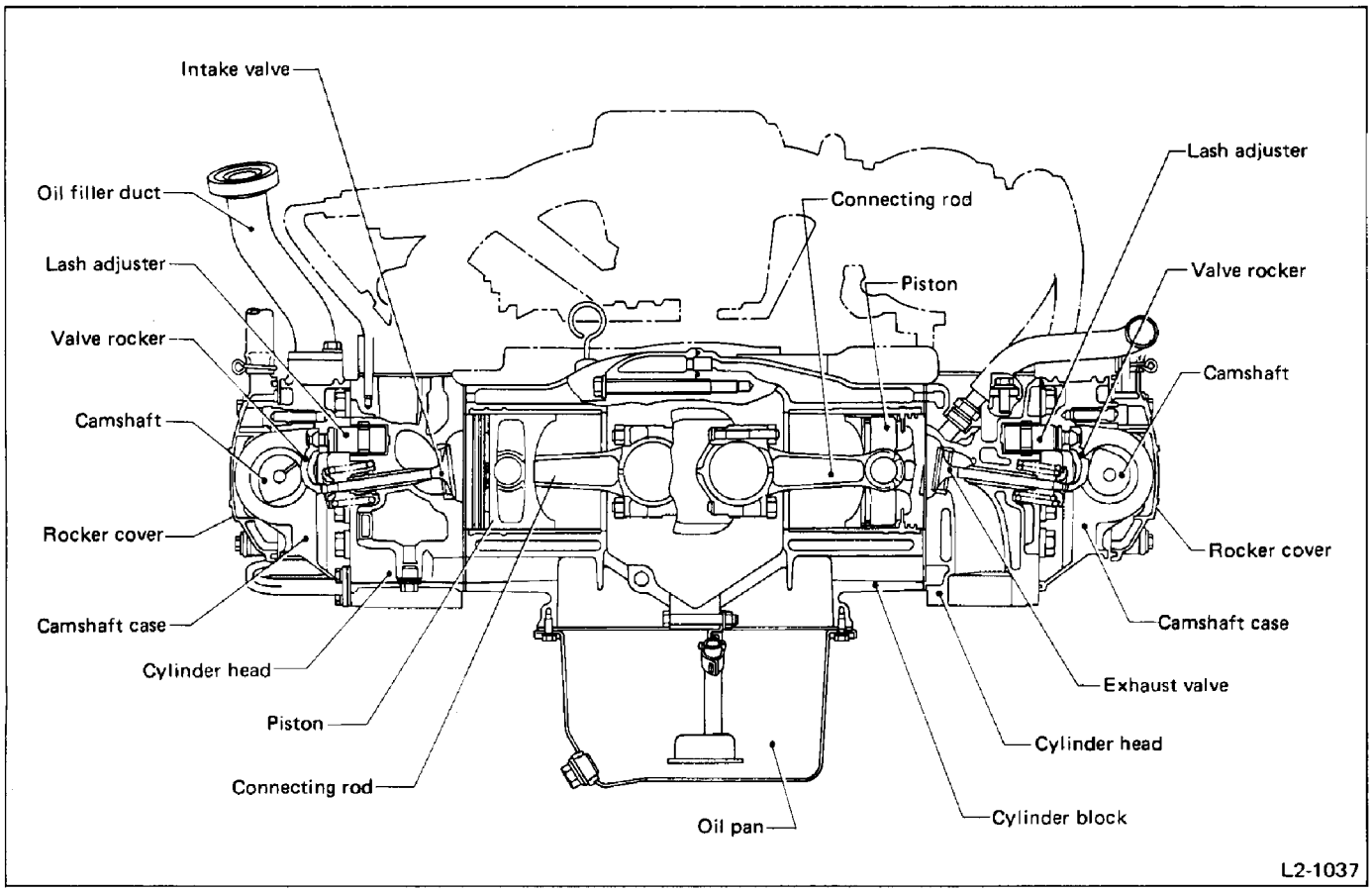

Fig. 1

CYLINDER BLOCK

1) The cylinder block, made of an aluminium alloy, is light weight and provides good heat conduction, and is divided into two portions, left-side half and right-side half, due to the adoption of a horizontally opposed piston arrangement.
2) The rotor housing for the oil pump is built into the cylinder block in order to reduce the total length of the engine.
3) The cylinder liner is a cast and dry type.

CYLINDER HEAD

1) The cylinder head, made of an aluminium alloy, forms a part of the bath-tub type combustion chamber which features higher combustion efficiency.
2) The intake and exhaust ports are laid out so as to minimize resistance for the intake air and exhaust gases, and they improve suction and discharge efficiencies.

HEAD GASKET

1) The cylinder head gaskets are provided with wire rings at the bore sections in order to increase pressure- and heat-resistant properties as well as an effective seal.
2) The oil passage is provided with an O-ring to improve sealing.

CAMSHAFT CASE

1) The camshaft case holds the camshaft, and is an aluminium die-casting.
2) The oil relief valve for the hydraulic lash adjuster is built into the cam case.
The oil filler duct is mounted on the right-hand camshaft case, and the distributor on the left-hand camshaft case.
3) The camshaft case has a groove all around the cylinder head mating surface, and fluid packing is filled into this groove for sealing.

ROCKER COVER

1) The rocker cover is a light-weight and compact aluminium die-casting.
2) This rocker cover adopts a float-supporting system with a rubber ring type gasket and an oil seal washer to reduce the noise level.

CRANKSHAFT

The crankshaft is made from special wrought iron which provides sturdiness. All corners of the journals are processed with "deep roll" treatment.
The horizontally opposed engine configuration provides greater strength against bending and torsional stresses while reducing the total length of the crankshaft.

PISTON AND PISTON RING

1) The piston is cast from aluminum alloy which features a small thermal expansion rate. Its top land is provided with valve relief and its skirt section has an elliptical, tapered design to provide heat- and wear-resistance.
The shaped piston and short piston pin effectively reduce the weight of the piston ASSY.
2) Three piston rings are used for each piston – two compression rings and one oil ring.
These piston rings have small wall thickness to reduce weight and oil consumption.

OIL PAN

The oil pan incorporates a double-layer baffle plate to stabilize the oil surface, and also improves rigidity along with reducing noise.

Valve Mechanism

The valve mechanism adopts a timing belt driven over-head camshaft (OHC) type. This OHC features reduced inertia mass of the valve mechanism, and superior valve follow-up performance from low to high engine speeds. The valve mechanism is provided with the hydraulic lash adjusters for maintenance-free and noiseless valve operation.

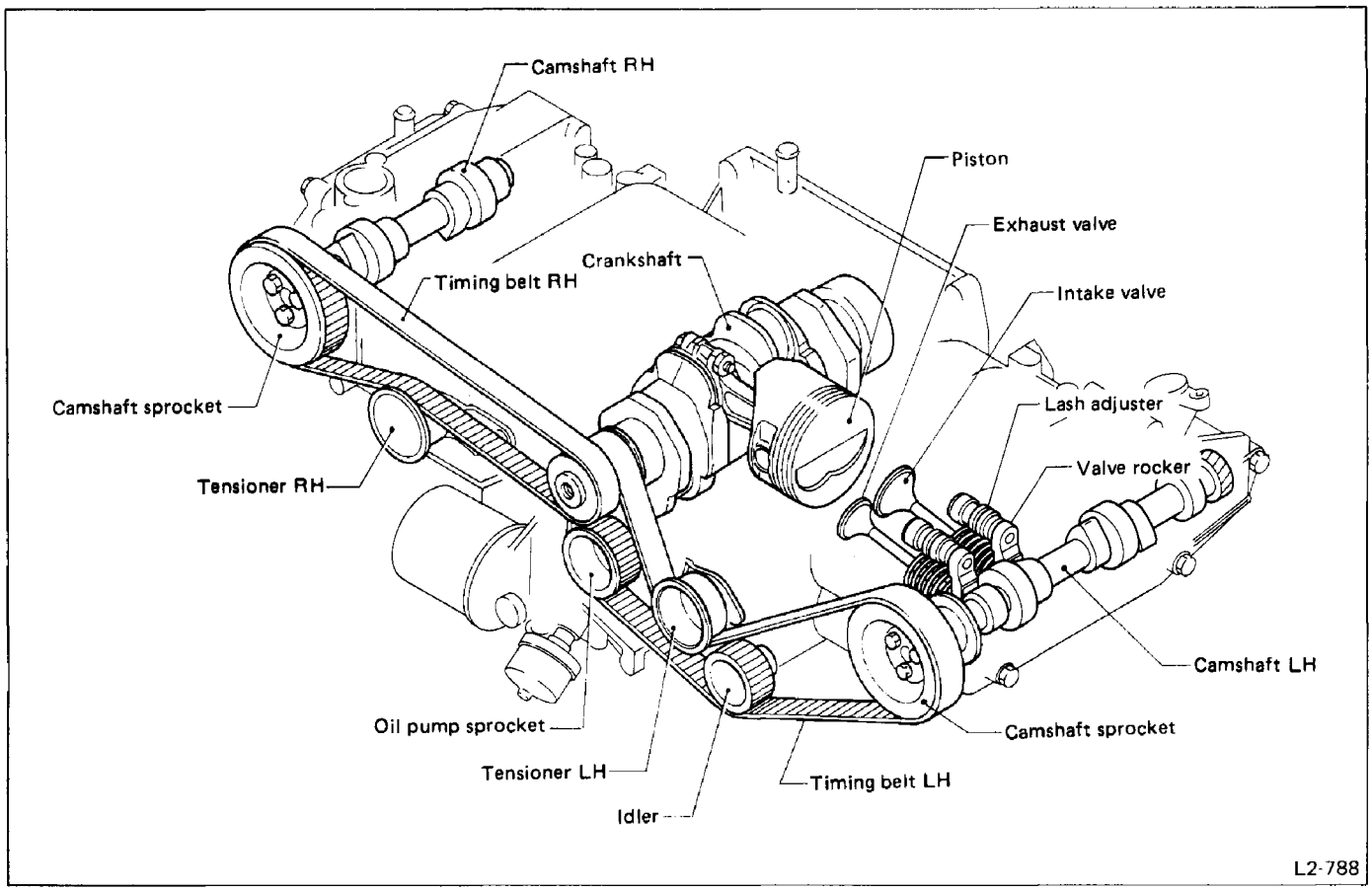

Fig. 2

CAMSHAFT

1) The camshafts are made of special cast iron, and are completely treated with Lubrite except for the bearing portions to improve initial fitting to the rocker arms. The cam rubbed surface is chilled to increase wear-resistance.
2) The cam profile is specially designed for this OHC type, and features higher output and less fuel consumption.
3) The cam base circle has an oil hole for lubricating the rocker arm. The distributor drive gear is mounted on the left-hand camshaft.

VALVE ROCKER AND VALVE LASH ADJUSTER

1) The rocker arms are special steel forgings having great strength and rigidity. Each arm is fitted with a sintered metal tip to improve wear resistance.
2) The hydraulic valve lash adjuster eliminates the need for valve clearance adjustment.
3) The rocker arms and valve lash adjusters are common between intake and exhaust valves.

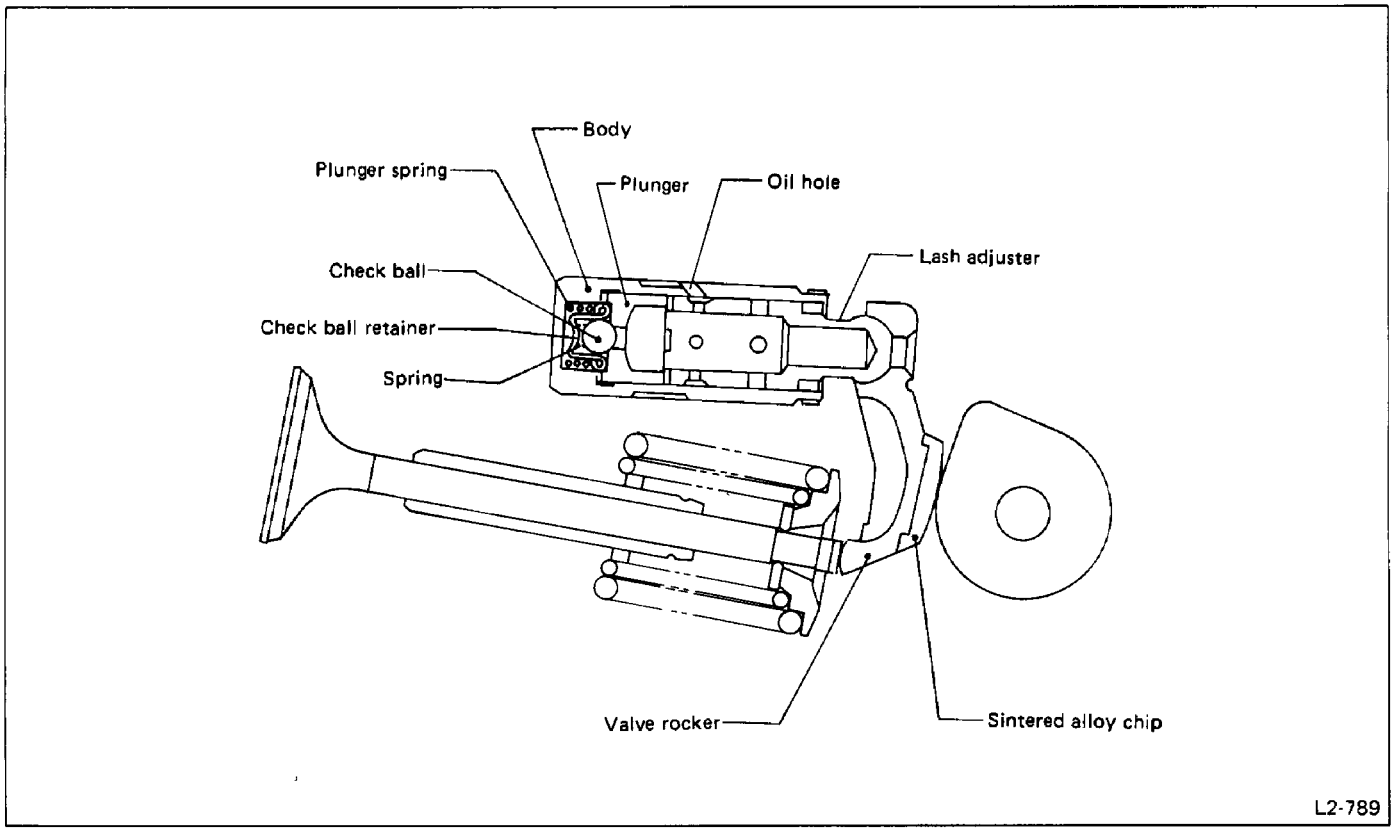

Fig. 3

VALVE AND VALVE SPRING

1) The valve has a small valve stem diameter [7 mm (0.28 in) dia.] to reduce the valve weight. The variable pitch valve spring is adopted to improve valve follow-up performance at high engine speeds.
2) The valve has a large valve head diameter to increase engine output.

TIMING BELT, TENSIONER AND SPROCKET

1) Two timing belts drive the left and right-hand camshafts. The timing belt is composed of a core featuring great strength and less elongation, canvas (tooth face portion) having superior wear resistance, and highly heat-resistant rubber.
2) The timing belt has special round teeth featuring positive engagement with sprocket teeth and smooth and low-noise operation. The crankshaft sprockets, oil pump sprocket and idler are made of sintered alloy.
3) The camshaft sprockets are made of sheet metal, and are common between right and left.
4) A grease-sealed type ball bearing is used in the tensioner. The tensioner spring gives the timing belt an initial tension which is adjustable by loosening the tensioner mounting bolt.

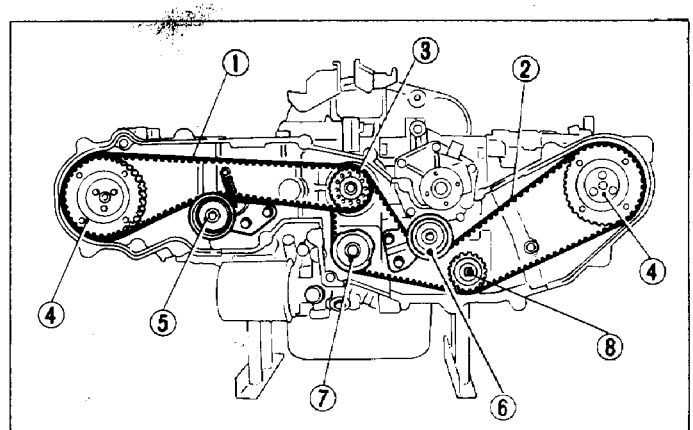

Fig. 4

TIMING BELT COVER

1) The resin-mold timing belt cover, consisting of six pieces, is used to protect the timing belt against dust and water.
2) Each of the left-hand and right-hand side covers has an access hole for belt tensioner adjustment.

SPECIFICATIONS AND SERVICE DATA

SPECIFICATIONS

			MPFI
ENGINE	Type		Horizontally opposed, liquid cooled, 4-cylinder, 4-stroke gasoline engine
	Valve arrangement		Over-head camshaft type
	Bore x Stroke mm (in)		92 x 67 (3.62 x 2.64)
	Piston displacement cm^3 (cc, cu in)		1,781 (1,781, 108.68)
	Compression ratio		9.5
	Compression pressure (at 350 rpm) kPa (kg/cm^2, psi)		1,157 (11.8, 168)
	Number of piston rings		Pressure ring: 2, Oil ring: 1
	Intake valve timing	Opening	16° BTDC
		Closing	60° ABDC
	Exhaust valve timing	Opening	60° BBDC
		Closing	16° ATDC
	Idling speed (At neutral (or N) or P position) rpm		MT: 700 ± 100 AT: 800 ± 100
	Firing order		1 → 3 → 2 → 4
	Ignition timing BTDC/rpm		MT: 20°/700 AT: 20°/800

SERVICE DATA

Cylinder head	Surface warpage limit			0.05 mm	(0.0020 in)
	Surface grinding limit			0.3 mm	(0.012 in)
	Standard height			90.6 mm	(3.567 in)
Valve set	Refacing angle			90°	
	Wear limit			0.5 mm	(0.020 in)
	Contacting width		Intake	1.2 – 1.8 mm	(0.047 – 0.071 in)
			Exhaust	1.5 – 2.0 mm	(0.059 – 0.079 in)
Valve guide	Inner diameter			7.000 – 7.015 mm	(0.2756 – 0.2762 in)
	Protrusion above head			17.5 – 18.5 mm	(0.689 – 0.728 in)
Valve stem	Head edge thickness	STD	Intake & Exhaust	1.3 mm	(0.051 in)
		Limit		0.8 mm	(0.031 in)
	Stem diameter		Intake	6.950 – 6.965 mm	(0.2736 – 0.2742 in)
			Exhaust	6.945 – 6.960 mm	(0.2734 – 0.2740 in)
	Stem oil clearance	STD	Intake	0.035 – 0.065 mm	(0.0014 – 0.0026 in)
			Exhaust	0.040 – 0.070 mm	(0.0016 – 0.0028 in)
		Limit		0.15 mm	(0.0059 in)
	Overall length		Intake & Exhaust	107.58 mm	(4.2354 in)
Valve spring	Free length		Outer spring	50.7 mm	(1.996 in)
			Inner spring	50.3 mm	(1.980 in)
	Squareness		Outer spring	2.2 mm	(0.087 in)
			Inner spring	2.2 mm	(0.087 in)
	Tension/spring height		Outer spring	203.0 – 238.3 N (20.7 – 24.3 kg, 45.6 – 53.6 lb)/ 41.5 mm (1.634 in)	
				502.1 – 576.7 N (51.2 – 58.8 kg, 112.9 – 129.7 lb)/ 31.5 mm (1.240 in)	
			Inner spring	88.3 – 101.0 N (9.0 – 10.3 kg, 19.8 – 22.7 lb)/ 38.5 mm (1.516 in)	
				201.0 – 230.5 N (20.5 – 23.5 kg, 45.2 – 51.8 lb)/ 28.5 mm (1.122 in)	

STD: Standard

Valve lash adjuster	Outer diameter		21.380 – 21.393 mm	(0.8417 – 0.8422 in)
	Cylinder head adjuster hole I.D.		21.413 – 21.470 mm	(0.8430 – 0.8453 in)
	Adjuster-to-hole clearance	STD	0.020 – 0.090 mm	(0.0008 – 0.0035 in)
		Limit	0.1 mm	(0.004 in)
Cylinder block	Surface warpage limit (mating with cylinder head)		0.05 mm	(0.0020 in)
	Surface grinding limit		0.4 mm	(0.016 in)
	Metal housing I.D.		59.000 – 59.018 mm	(2.3228 – 2.3235 in)
	Oil seal hole I.D.	Front and center	59.000 – 59.030 mm	(2.3228 – 2.3240 in)
		Rear	93.000 – 93.035 mm	(3.6614 – 3.6628 in)
	Cylinder bore	STD	91.985 – 92.015 mm	(3.6214 – 3.6226 in)
		Taper limit	0.050 mm	(0.0020 in)
		Out-of roundness limit	0.050 mm	(0.0020 in)
		Piston clearance STD	0.015 – 0.035 mm	(0.0006 – 0.0014 in)
		Limit	0.060 mm	(0.0024 in)
		Enlarging (boring) limit	0.3 mm	(0.012 in)
Piston	Outer diameter	STD	91.970 – 91.980 mm	(3.6209 – 3.6213 in)
		0.25 mm (0.0098 in) OS	92.220 – 92.230 mm	(3.6307 – 3.6311 in)
		0.50 mm (0.0197 in) OS	92.470 – 92.480 mm	(3.6405 – 3.6409 in)
	Standard inner diameter of piston pin hole		20.999 – 21.009 mm	(0.8267 – 0.8271 in)
Piston pin	Outer diameter		20.994 – 21.000 mm	(0.8265 – 0.8268 in)
	Standard clearance between piston pin and hole in piston		0.001 – 0.015 mm	(0.00004 – 0.00059 in)
	Degree of fit		Piston pin must be fitted into position with thumb at 20°C (68°F).	
	Standard clearance between piston pin and hole in connecting rod		0 – 0.022 mm	(0 – 0.0009 in)
Piston ring	Width	Top ring	1.17 – 1.19 mm	(0.0461 – 0.0469 in)
		Second ring	1.47 – 1.49 mm	(0.0579 – 0.0587 in)
		Oil ring	Combination ring	
	Radial wall thickness	Top ring	3.2 – 3.4 mm	(0.126 – 0.134 in)
		Second ring	3.6 – 3.8 mm	(0.142 – 0.150 in)
		Oil ring	Combination ring	
	Piston ring gap	Top & Second ring STD	0.2 – 0.35 mm	(0.0079 – 0.0138 in)
		Limit	1.5 mm	(0.059 in)
		Oil ring STD	0.3 – 0.9 mm	(0.012 – 0.035 in)
		Limit	2.0 mm	(0.079 in)
	Clearance between piston ring and piston ring groove	Top ring STD	0.040 – 0.080 mm	(0.0016 – 0.0031 in)
		Limit	0.15 mm	(0.0059 in)
		Second ring STD	0.030 – 0.070 mm	(0.0012 – 0.0028 in)
		Limit	0.15 mm	(0.0059 in)
		Oil ring STD	0 mm	(0 in)
		Limit	0 mm	(0 in)

STD: Standard OS: Oversize

Connecting rod	Distance between big end and small end hole		116.95 – 117.05 mm	(4.6043 – 4.6083 in)
	Crank pin bore diameter		48.000 – 48.019 mm	(1.8898 – 1.8905 in)
	Piston pin bore diameter		21.000 – 21.016 mm	(0.8268 – 0.8274 in)
	Width at big end		19.35 – 19.43 mm	(0.7618 – 0.7650 in)
	Side clearance	STD	0.070 – 0.330 mm	(0.0028 – 0.0130 in)
		Limit	0.4 mm	(0.016 in)
	Bend twist per 100 mm (3.94 in) in length	Limit	0.10 mm	(0.0039 in)
Connecting rod bearing	Thickness at center portion	STD	1.485 – 1.490 mm	(0.0585 – 0.0587 in)
		0.03 mm (0.0012 in) US	1.500 – 1.505 mm	(0.0591 – 0.0593 in)
		0.05 mm (0.0020 in) US	1.510 – 1.515 mm	(0.0594 – 0.0596 in)
		0.25 mm (0.0098 in) US	1.610 – 1.615 mm	(0.0634 – 0.0636 in)
	Oil clearance	STD	0.010 – 0.054 mm	(0.0004 – 0.0021 in)
		Limit	0.10 mm	(0.0039 in)
Crankshaft	Bend limit		0.035 mm	(0.0014 in)
	Thrust clearance	STD	0.010 – 0.095 mm	(0.0004 – 0.0037 in)
		Limit	0.30 mm	(0.0118 in)
	Crank journal outer diameter	Front STD	54.957 – 54.972 mm	(2.1637 – 2.1642 in)
		0.03 mm (0.0012 in) US	54.927 – 54.942 mm	(2.1625 – 2.1631 in)
		0.05 mm (0.0020 in) US	54.907 – 54.922 mm	(2.1617 – 2.1623 in)
		0.25 mm (0.0098 in) US	54.707 – 54.722 mm	(2.1538 – 2.1544 in)
		Center STD	54.954 – 54.970 mm	(2.1635 – 2.1642 in)
		0.03 mm (0.0012 in) US	54.924 – 54.940 mm	(2.1624 – 2.1630 in)
		0.05 mm (0.0020 in) US	54.904 – 54.920 mm	(2.1616 – 2.1622 in)
		0.25 mm (0.0098 in) US	54.704 – 54.720 mm	(2.1537 – 2.1543 in)
		Rear STD	54.955 – 54.970 mm	(2.1636 – 2.1642 in)
		0.03 mm (0.0012 in) US	54.925 – 54.940 mm	(2.1624 – 2.1630 in)
		0.05 mm (0.0020 in) US	54.905 – 54.920 mm	(2.1616 – 2.1622 in)
		0.25 mm (0.0098 in) US	54.705 – 54.720 mm	(2.1537 – 2.1543 in)
	Width at center portion		25.970 – 26.015 mm	(1.0224 – 1.0242 in)
	Oil clearance	Front & Rear STD	0.003 – 0.036 mm	(0.0001 – 0.0014 in)
		Limit	0.055 mm	(0.0022 in)
		Center STD	0.008 – 0.027 mm	(0.0003 – 0.0011 in)
		Limit	0.045 mm	(0.0018 in)
	Out-of roundness		0.030 mm (0.0012 in) or less	
	Grinding limit		0.250 mm	(0.0098 in)
	Crankpin outer diameter	STD	44.995 – 45.010 mm	(1.7715 – 1.7720 in)
		0.03 mm (0.0012 in) US	44.965 – 44.980 mm	(1.7703 – 1.7709 in)
		0.05 mm (0.0020 in) US	44.945 – 44.960 mm	(1.7695 – 1.7701 in)
		0.25 mm (0.0098 in) US	44.745 – 44.760 mm	(1.7616 – 1.7622 in)
	Width		19.50 – 19.68 mm	(0.7677 – 0.7748 in)
	Oil clearance	STD	0.010 – 0.054 mm	(0.0004 – 0.0021 in)
		Limit	0.10 mm	(0.0039 in)
	Out-of roundness		0.030 mm (0.0012 in) or less	
	Grinding limit		0.250 mm	(0.0098 in)

STD: Standard **OS: Oversize** **US: Undersize**

Crankshaft bearing	Thickness	Front & Rear STD	2.015 – 2.019 mm	(0.0793 – 0.0795 in)
		0.03 mm (0.0012 in) US	2.030 – 2.034 mm	(0.0799 – 0.0801 in)
		0.05 mm (0.0020 in) US	2.040 – 2.044 mm	(0.0803 – 0.0805 in)
		0.25 mm (0.0098 in) US	2.140 – 2.144 mm	(0.0843 – 0.0844 in)
		Center STD	2.019 – 2.022 mm	(0.0795 – 0.0796 in)
		0.03 mm (0.0012 in) US	2.034 – 2.037 mm	(0.0801 – 0.0802 in)
		0.05 mm (0.0020 in) US	2.044 – 2.047 mm	(0.0805 – 0.0806 in)
		0.25 mm (0.0098 in) US	2.144 – 2.147 mm	(0.0844 – 0.0845 in)
	Width	Center STD	25.920 – 25.960 mm	(1.0205 – 1.0220 in)
Camshaft	Bend limit		0.025 mm	(0.0010 in)
	Thrust clearance		0.030 – 0.260 mm	(0.0012 – 0.0102 in)
	Cam lobe height	STD	39.75 – 39.85 mm	(1.5650 – 1.5689 in)
		Wear limit	0.15 mm	(0.0059 in)
	Cam journal outer diameter	Front	37.964 – 37.980 mm	(1.4946 – 1.4953 in)
		Center	48.464 – 48.480 mm	(1.9080 – 1.9087 in)
		Rear	47.964 – 47.980 mm	(1.8883 – 1.8890 in)
		LH distributor	38.964 – 38.980 mm	(1.5340 – 1.5346 in)
	Oil clearance	STD	0.020 – 0.054 mm	(0.0008 – 0.0021 in)
		Limit	0.070 mm	(0.0028 in)
Camshaft case	Camshaft journal inner diameter	Front (camshaft support inner diameter)	38.000 – 38.018 mm	(1.4961 – 1.4968 in)
		Center	48.500 – 48.518 mm	(1.9094 – 1.9102 in)
		Rear	48.000 – 48.018 mm	(1.8898 – 1.8905 in)
		Distributor	39.000 – 39.018 mm	(1.5354 – 1.5361 in)
	Camshaft support depth of spigot		19.00 – 19.08 mm	(0.7480 – 0.7512 in)
Camshaft support	I.D.		38.000 – 38.018 mm	(1.4961 – 1.4968 in)
	O.D.		57.971 – 59.990 mm	(2.2823 – 2.3618 in)
	Height of spigot		14.95 – 15.00 mm	(0.5886 – 0.5906 in)

STD: Standard US: Undersize

COMPONENT PARTS

Cylinder Block and Oil Pan

1 Water by-pass hose
2 Service hole plug
3 Oil seal (Rear)
4 Oil separator cover gasket
5 Oil separator cover
6 Main gallery plug
7 Cylinder block O-ring
8 Back-up ring
9 Service hole plug
10 Oil pan gasket
11 Oil pan
12 Oil drain plug
13 Oil strainer
14 O-ring
15 Oil strainer stay
16 Service hole plug
17 Front engine hanger
18 Cylinder block plug
19 Oil seal (Front)
20 O-ring
21 Service hole plug
22 Oil level gauge guide
23 Oil level gauge
24 Water pump pulley
25 Pulley cover
26 Water pump ASSY
27 Gasket
28 Timing plate
29 Seal
30 Oil pump ASSY
31 Oil pressure gauge
32 Oil pressure switch
33 Gasket

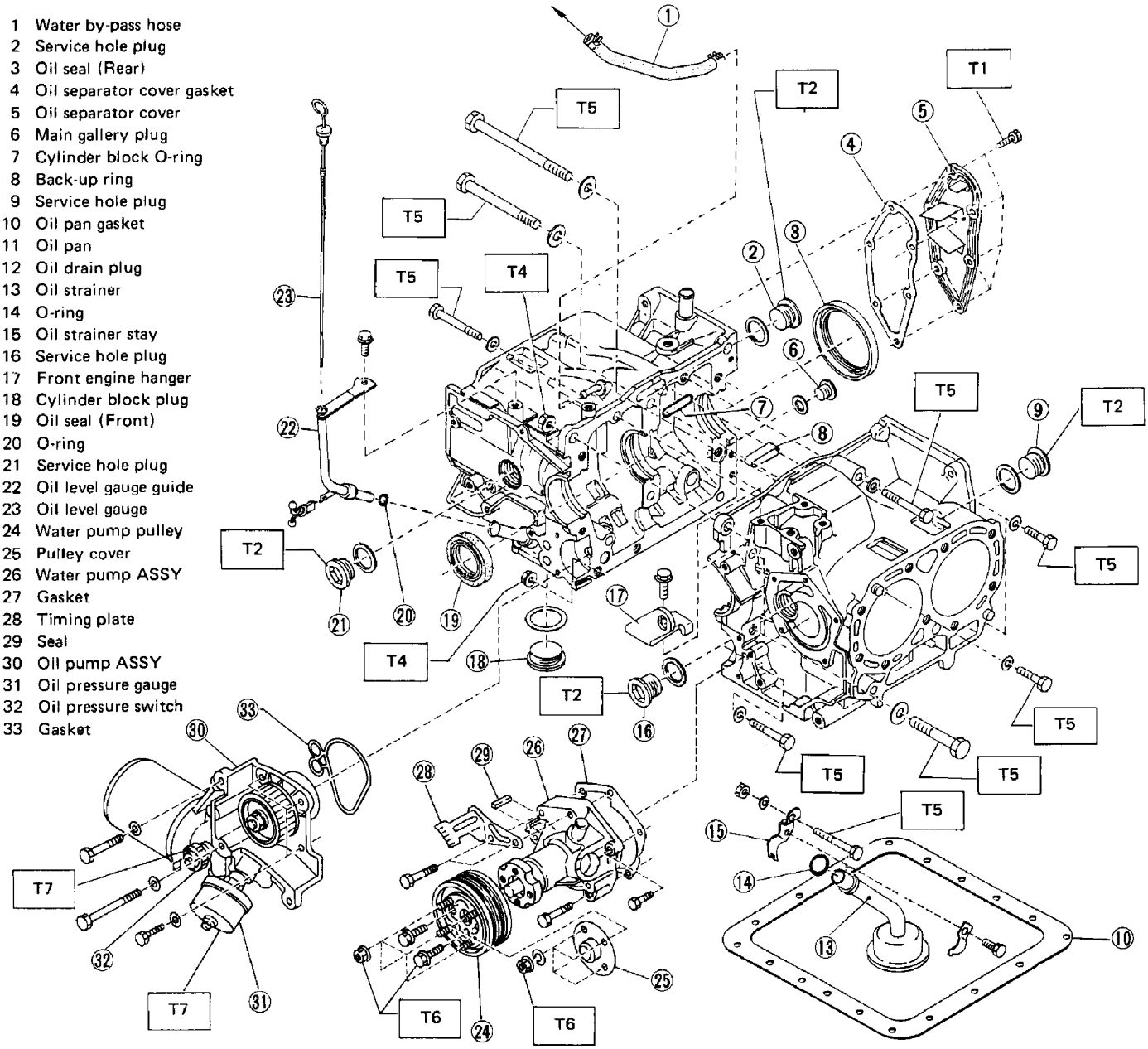

Tightening torque N·m (kg-m, ft-lb)

T1: 4.4 – 5.4 (0.45 – 0.55, 3.3 – 4.0)
T2: 62 – 76 (6.3 – 7.7, 46 – 56)
T3: 44 – 49 (4.5 – 5.0, 33 – 36)
T4: 23 – 26 (2.3 – 2.7, 17 – 20)
T5: [M10] 39 – 47 (4.0 – 4.8, 29 – 35)
[M8] 23 – 26 (2.3 – 2.7, 17 – 20)
T6: 9.1 – 10.5 (0.93 – 1.07, 6.7 – 7.7)
T7: 22 – 27 (2.2 – 2.8, 16 – 20)

Fig. 5

L2-1064

Crankshaft and Piston

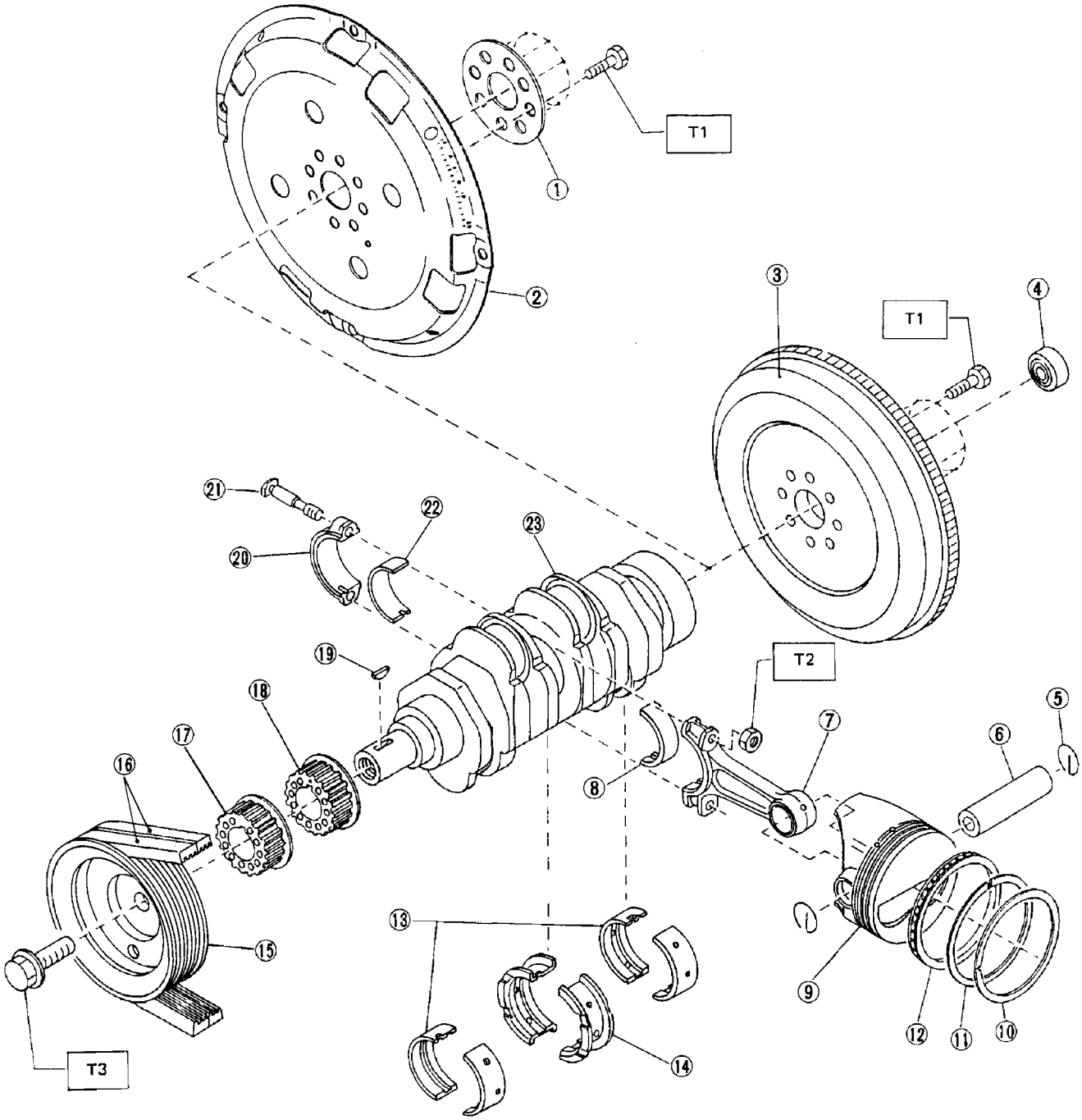

1 Reinforcement
2 Drive plate
3 Flywheel
4 Ball bearing
5 Circlip
6 Piston pin
7 Connecting rod
8 Connecting rod bearing
9 Piston
10 Top ring
11 Second ring
12 Oil ring
13 Crankshaft bearing (Front and rear)
14 Crankshaft bearing (Center)
15 Crankshaft pulley
16 V-belt
17 Crankshaft sprocket CP
18 Crankshaft sprocket No. 2
19 Woodruff key
20 Connecting rod cap
21 Connecting rod cap bolt
22 Connecting rod bearing
23 Crankshaft

Tightening torque N·m (kg-m, ft-lb)
T1: 69 – 75 (7.0 – 7.6, 51 – 55)
T2: 39 – 42 (4.0 – 4.3, 29 – 31)
T3: 89 – 107 (9.1 – 10.9, 66 – 79)

Fig. 6

L2-1038

Cylinder Head and Flywheel Housing

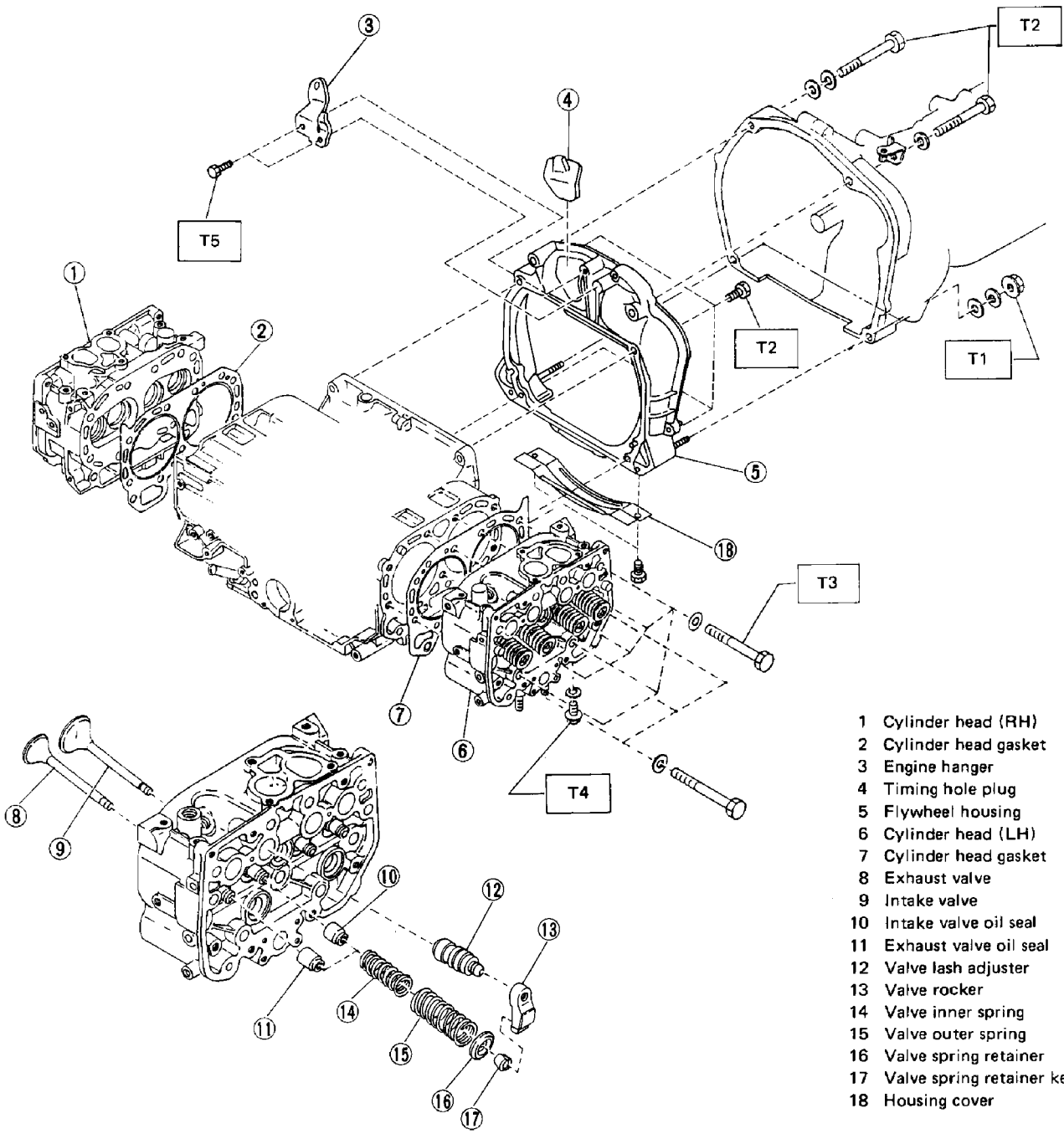

1 Cylinder head (RH)
2 Cylinder head gasket
3 Engine hanger
4 Timing hole plug
5 Flywheel housing
6 Cylinder head (LH)
7 Cylinder head gasket
8 Exhaust valve
9 Intake valve
10 Intake valve oil seal
11 Exhaust valve oil seal
12 Valve lash adjuster
13 Valve rocker
14 Valve inner spring
15 Valve outer spring
16 Valve spring retainer
17 Valve spring retainer key
18 Housing cover

Tightening torque N·m (kg-m, ft-lb)

T1: 46 – 54 (4.7 – 5.5, 34 – 40)
T2: 34 – 40 (3.5 – 4.1, 25 – 30)
T3: 60 – 68 (6.1 – 6.9, 44 – 50)
T4: 22 – 27 (2.2 – 2.8, 16 – 20)
T5: 17.2 – 20.1 (1.75 – 2.05, 12.7 – 14.8)

L2-1276

Fig. 7

Camshaft and Timing Belt

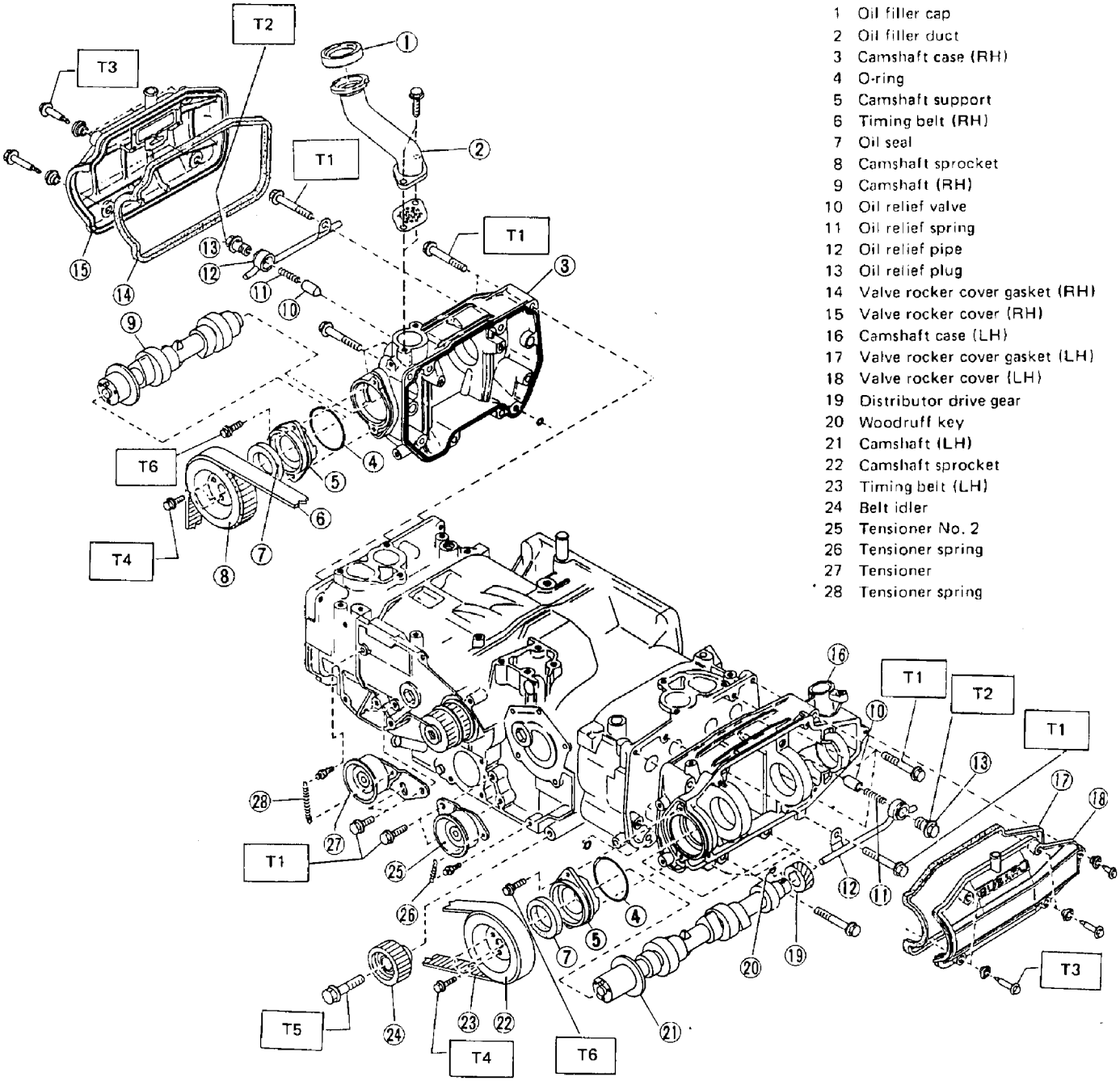

1 Oil filler cap
2 Oil filler duct
3 Camshaft case (RH)
4 O-ring
5 Camshaft support
6 Timing belt (RH)
7 Oil seal
8 Camshaft sprocket
9 Camshaft (RH)
10 Oil relief valve
11 Oil relief spring
12 Oil relief pipe
13 Oil relief plug
14 Valve rocker cover gasket (RH)
15 Valve rocker cover (RH)
16 Camshaft case (LH)
17 Valve rocker cover gasket (LH)
18 Valve rocker cover (LH)
19 Distributor drive gear
20 Woodruff key
21 Camshaft (LH)
22 Camshaft sprocket
23 Timing belt (LH)
24 Belt idler
25 Tensioner No. 2
26 Tensioner spring
27 Tensioner
28 Tensioner spring

Tightening torque N·m (kg-m, ft-lb)

T1:	17.2 – 20.1	(1.75 – 2.05, 12.7 – 14.8)
T2:	23 – 26	(2.3 – 2.7, 17 – 20)
T3:	4.4 – 5.4	(0.45 – 0.55, 3.3 – 4.0)
T4:	9.1 – 10.5	(0.93 – 1.07, 6.7 – 7.7)
T5:	39 – 47	(4.0 – 4.8, 29 – 35)
T6:	6 – 7	(0.6 – 0.7, 4.3 – 5.1)

L2-575

Fig. 8

Belt Cover

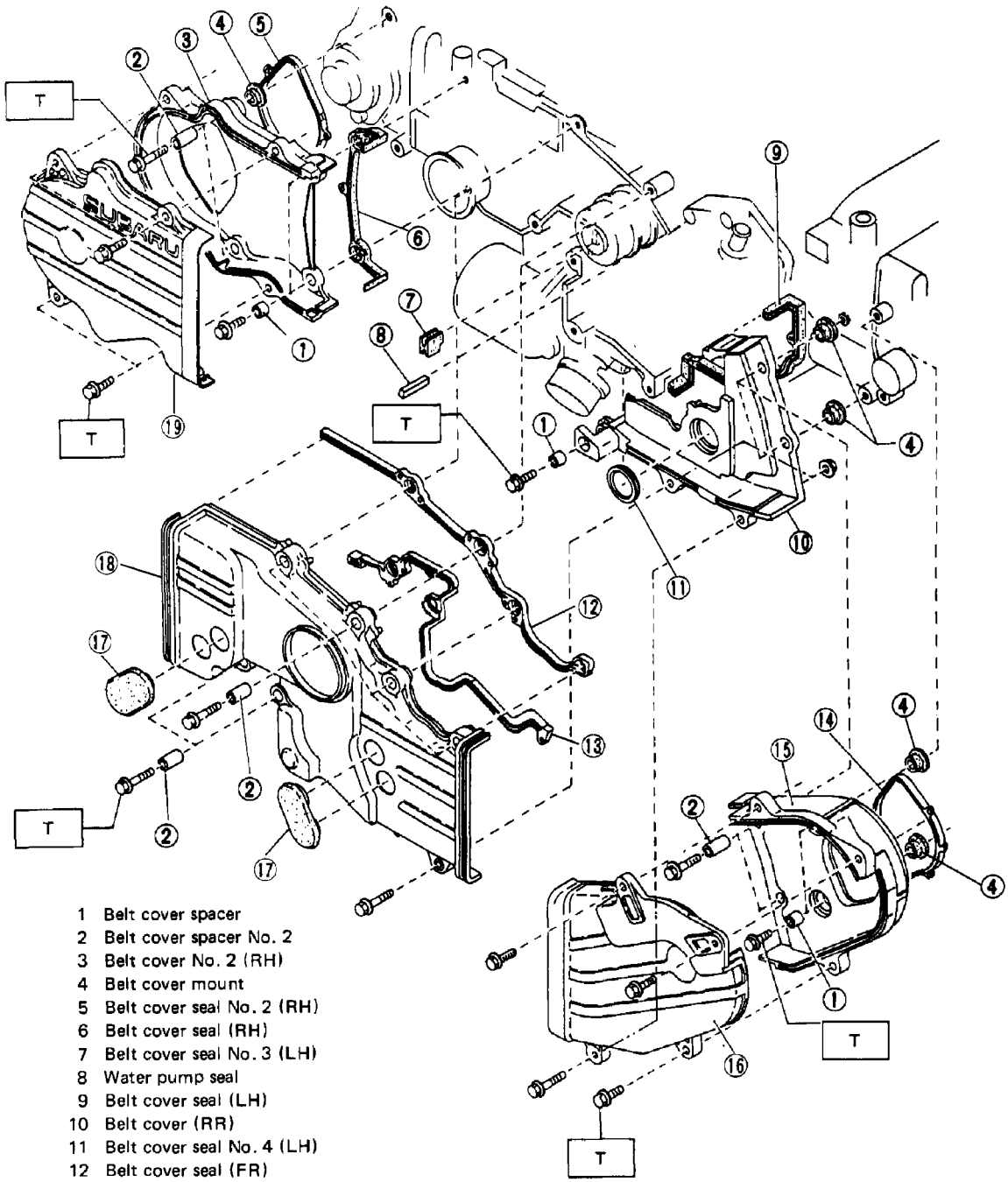

1 Belt cover spacer
2 Belt cover spacer No. 2
3 Belt cover No. 2 (RH)
4 Belt cover mount
5 Belt cover seal No. 2 (RH)
6 Belt cover seal (RH)
7 Belt cover seal No. 3 (LH)
8 Water pump seal
9 Belt cover seal (LH)
10 Belt cover (RR)
11 Belt cover seal No. 4 (LH)
12 Belt cover seal (FR)
13 Belt cover seal (RR)
14 Belt cover seal No. 2 (LH)
15 Belt cover No. 2 (LH)
16 Belt cover (LH)
17 Belt cover plug
18 Belt cover (FR)
19 Belt cover (RH)

Tightening torque N·m (kg-m, ft-lb)
T: 4.4 – 5.4 (0.45 – 0.55, 3.3 – 4.0)

L2-1277

Fig. 9

Electrical Equipment

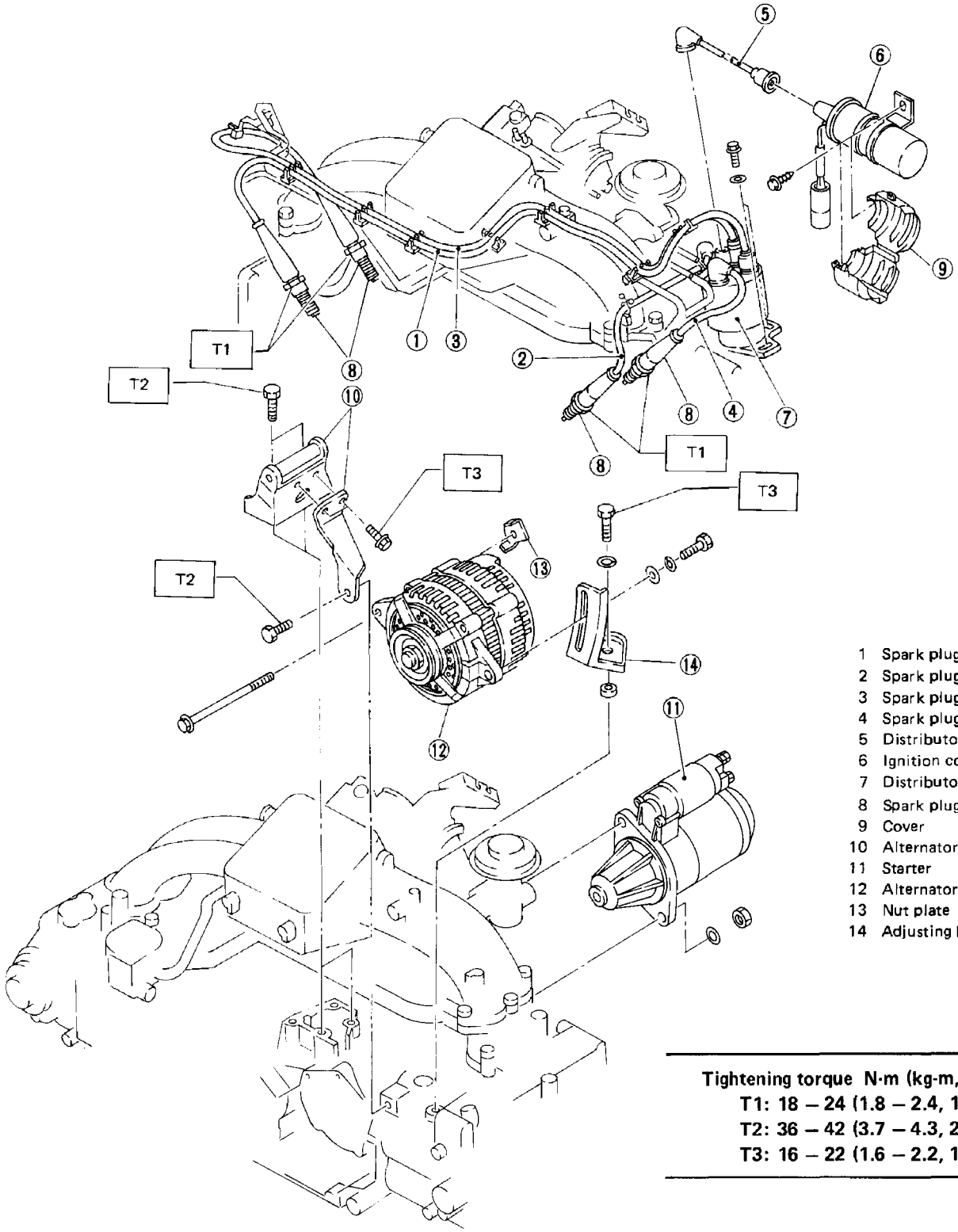

1 Spark plug cord 1
2 Spark plug cord 2
3 Spark plug cord 3
4 Spark plug cord 4
5 Distributor cord
6 Ignition coil
7 Distributor
8 Spark plug
9 Cover
10 Alternator bracket
11 Starter
12 Alternator
13 Nut plate
14 Adjusting bar

Tightening torque N·m (kg-m, ft-lb)
T1: 18 – 24 (1.8 – 2.4, 13 – 17)
T2: 36 – 42 (3.7 – 4.3, 27 – 31)
T3: 16 – 22 (1.6 – 2.2, 12 – 16)

L2-1278

Fig. 10

SERVICE PROCEDURE

General Precautions

- Before disassembling engine, install ENGINE STAND 499817100 x 2.
- All parts should be thoroughly cleaned, paying special attention to the engine oil passages, pistons and bearings.
- Rotating parts and sliding parts such as piston, bearing and gear should be coated with oil prior to ASSY.
- Be careful not to let oil, grease or coolant contact the timing belt and clutch disc.
- All removed parts, if to be reused, should be reinstalled in the original positions and directions.
- Gaskets and lock washers must be replaced with new ones. Liquid gasket should be used where specified to prevent leakage.
- Bolts, nuts and washers should be replaced with new ones as required.
- Even if necessary inspections have been made in advance, proceed with ASSY work while making rechecks.

Timing Belt and Belt Cover

REMOVAL

1) Loosen water pump pulley mounting nuts or bolts.
2) Loosen two alternator mounting bolts, and detach V-belt. [Except air conditioner equipped model]
3) Remove water pump pulley and pulley cover.
4) Disconnect lead from oil pressure switch.
5) Remove oil level gauge guide together with gauge.
6) Remove crankshaft pulley. To lock crankshaft, use FLYWHEEL STOPPER [manual transmission model] or DRIVE PLATE STOPPER [automatic transmission model].

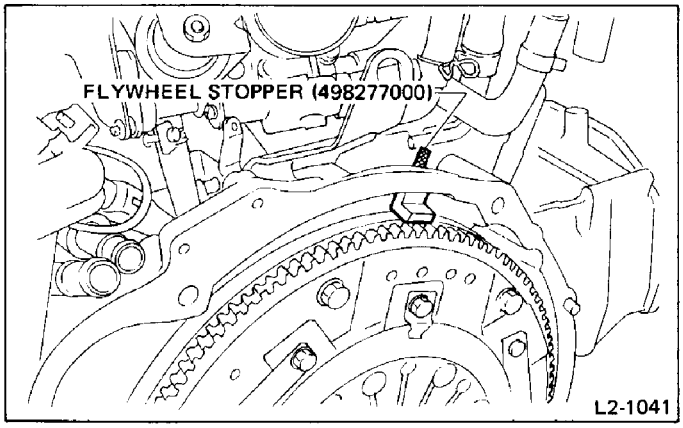

Fig. 11

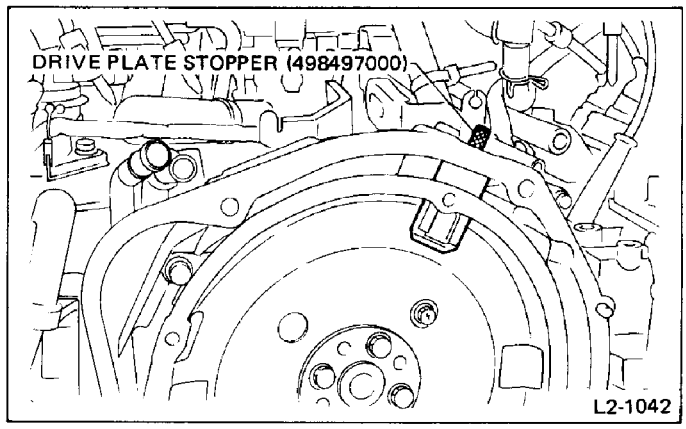

Fig. 12

7) Remove belt covers LH, RH and FR.
8) Removing timing belt
   (1) Loosen tensioner mounting bolts on #1 cylinder by 1/2 turn.
   (2) With tensioner fully turned to slacken belt, tighten mounting bolts.

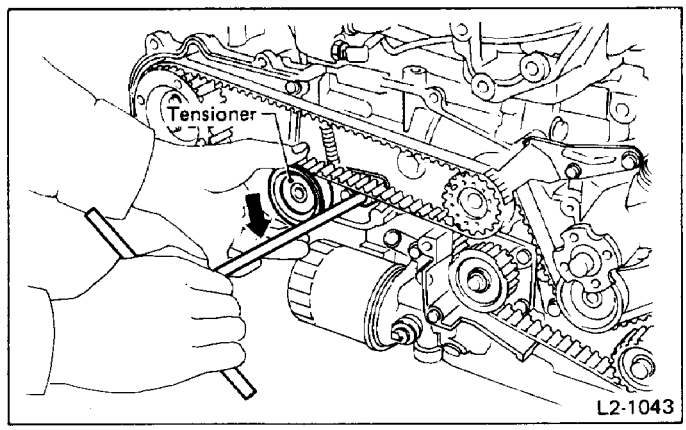

Fig. 13

   (3) Mark rotating direction of timing belt, then remove belt.
   (4) Loosen tensioner No. 2 mounting bolts on #2 cylinder by 1/2 turn.
   (5) With tensioner fully rotated to slacken belt by using TENSIONER WRENCH, tighten tensioner mounting bolts.

Cover TENSIONER WRENCH clamping tips with a rubber hose or waste cloth to prevent crankshaft or pulley from being damaged.

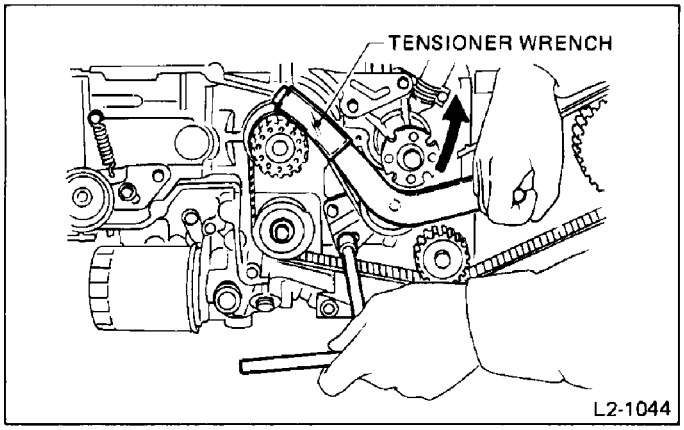

Fig. 14

(6) Remove crankshaft sprocket.
(7) Remove timing belt after marking rotating direction of belt.
(8) Remove crankshaft sprocket No. 2.

9) Remove tensioner and tensioner No. 2 together with tensioner spring.
10) Remove belt idler.
11) Remove camshaft sprockets by using CAMSHAFT SPROCKET WRENCH.

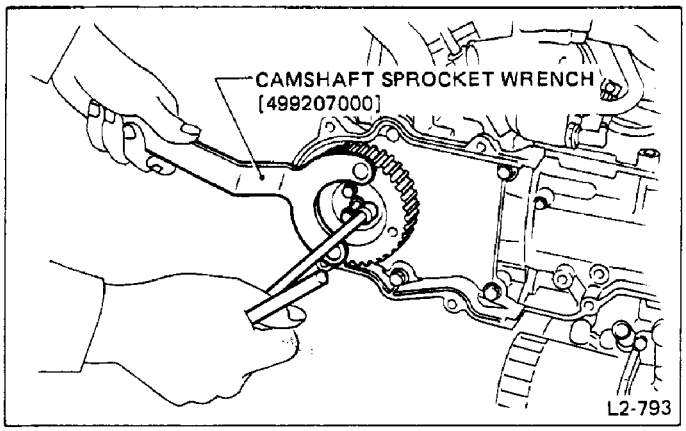

Fig. 15

12) Remove right-hand belt cover No. 2, left-hand belt cover No. 2 and belt cover RR.

INSPECTION

TIMING BELT

1) Check timing belt teeth for breaks, cracks, and wear. If any fault is found, replace belt.
2) Check the condition of back side of belt; if any crack is found, replace belt.

a. Be careful not to let oil, grease or coolant contact the belt. Remove quickly and thoroughly if this happens.
b. Do not bend the belt sharply. [The bending radius must be greater than 60 mm (2.36 in).]
c. When replacing belt, be sure to replace both belts as a matched set.

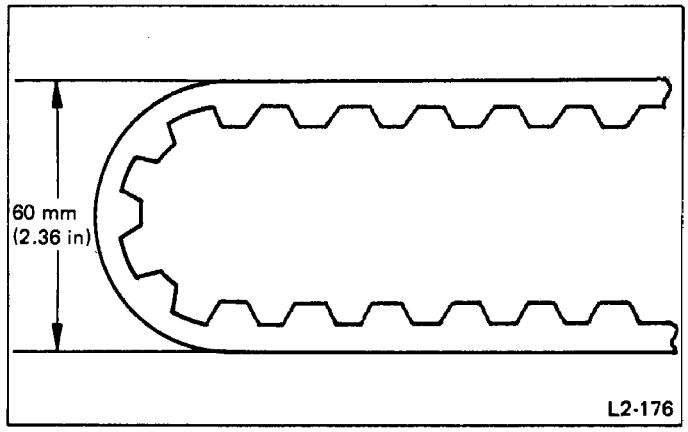

Fig. 16

TIMING BELT TENSIONER

1) Check tensioner roller for smooth rotation. Replace roller if noise or excessive play is noted.
2) Measure the out-of-squareness of tensioner roller H. If it exceeds 0.5 mm (0.020 in), replace roller.

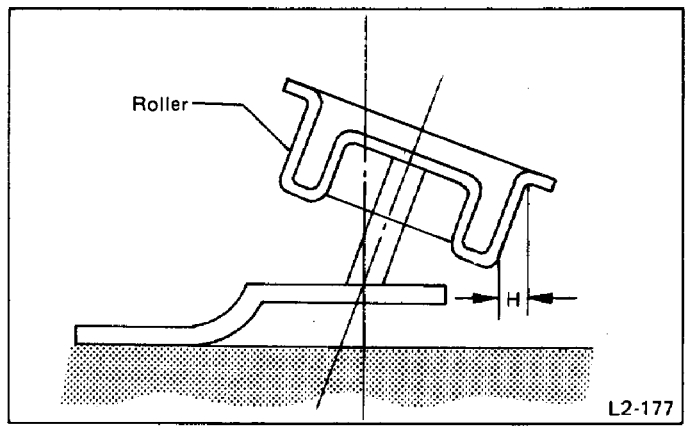

Fig. 17

BELT IDLER

Check idler for smooth rotation. Replace if noise or excessive play is noted.

INSTALLATION

1) Install belt cover seal LH No. 3 to cylinder block.
2) Install belt cover LH seal, belt cover No. 4 LH seal, and belt cover mount to belt cover RR, then install to cylinder block.

Tightening torque:
4.4 – 5.4 N·m (0.45 – 0.55 kg-m, 3.3 – 4.0 ft-lb)

3) Install belt cover No. 2 LH seal and belt cover mounts to belt cover No. 2 LH, then install to cylinder head and camshaft case.

Tightening torque:
4.4 – 5.4 N·m (0.45 – 0.55 kg-m, 3.3 – 4.0 ft-lb)

4) Install belt cover RH seal, belt cover No. 2 RH seal, and belt cover mounts to belt cover No. 2 RH, then install to cylinder head and camshaft case.

Tightening torque:
4.4 – 5.4 N·m (0.45 – 0.55 kg-m, 3.3 – 4.0 ft-lb)

5) Install camshaft sprockets to right and left camshafts. To lock camshaft, use CAMSHAFT SPROCKET WRENCH. Tighten bolts gradually in two or three steps until the specified torque is attained.

Tightening torque:
9.1 – 10.5 N·m (0.93 – 1.07 kg-m, 6.7 – 7.7 ft-lb)

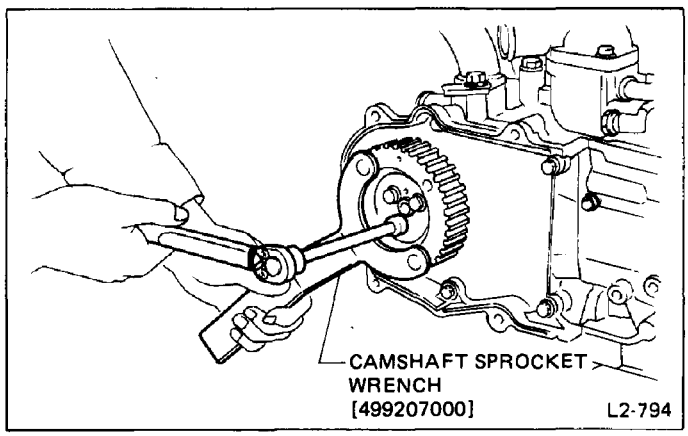

Fig. 18

6) Installing tensioner
(1) Attach tensioner spring to tensioner, then install to cylinder block RH. Tighten bolts temporarily by hand.
(2) Attach tensioner spring to bolt, tighten bolt ⓐ, and then loosen 1/2 turn.
(3) Push down tensioner until it stops, then tighten temporarily bolt ⓑ.

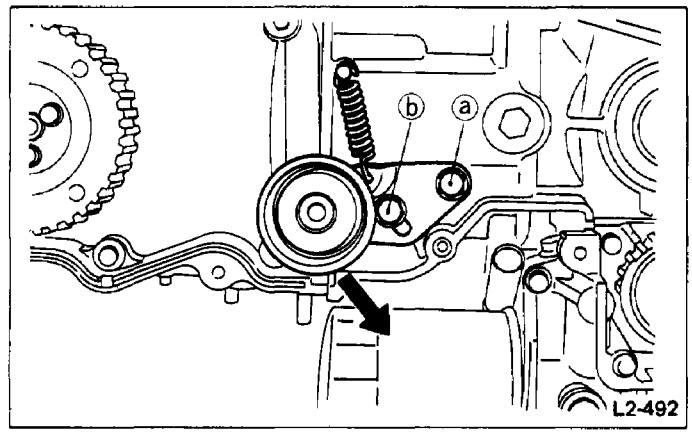

Fig. 19

7) Installing tensioner No. 2
(1) Attach tensioner spring to tensioner No. 2, then install the tensioner No. 2 to cylinder block LH. Tighten bolts temporarily by hand.
(2) Attach tensioner spring to bolt, tighten bolt ⓒ, then loosen 1/2 turn.
(3) Raise tensioner No. 2 using TENSIONER WRENCH (499007000) until it stops, then tighten bolt ⓓ temporarily.

Cover the tip of tensioner wrench with a rubber hose or waste cloth to prevent crankshaft or pulley from being damaged.

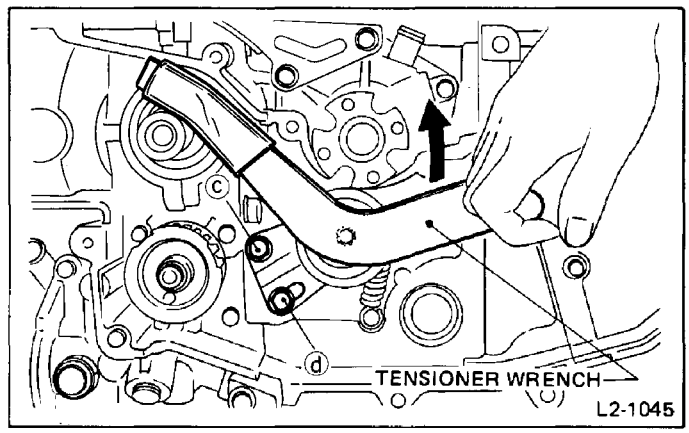

Fig. 20

8) Install belt idler to cylinder block, using care not to turn over seal.

Tightening torque:
39 – 47 N·m (4.0 – 4.8 kg-m, 29 – 35 ft-lb)

9) Install timing belt.
(1) Install sprocket No. 2 and sprocket to crankshaft.

Sprocket No. 2 can be identified by the absence of dowel pin.

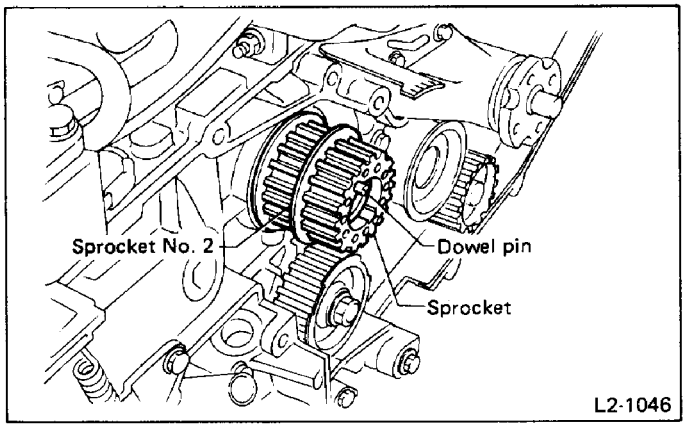

Fig. 21

(2) Install crankshaft pulley to crankshaft, and tighten bolt temporarily.

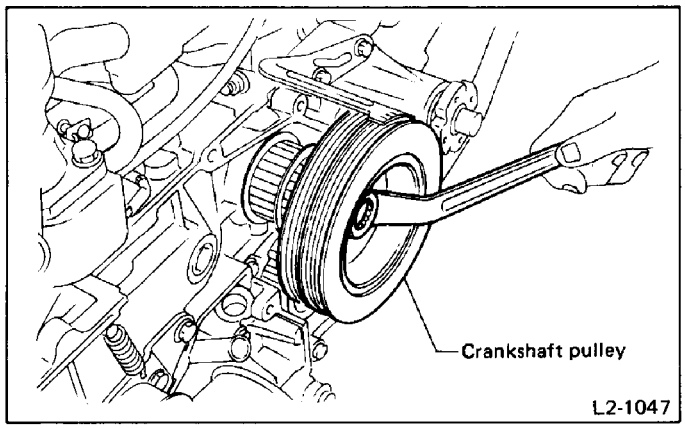

Fig. 22

(3) Align the center of three lines scribed on the flywheel with timing mark on flywheel housing.

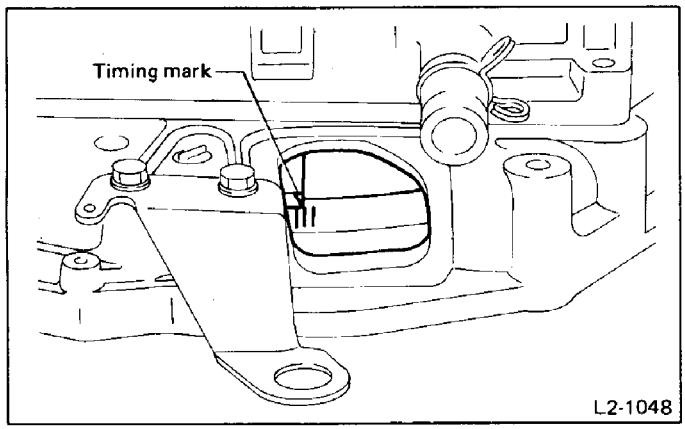

Fig. 23

(4) Align timing mark on camshaft sprocket LH with notch in belt cover.

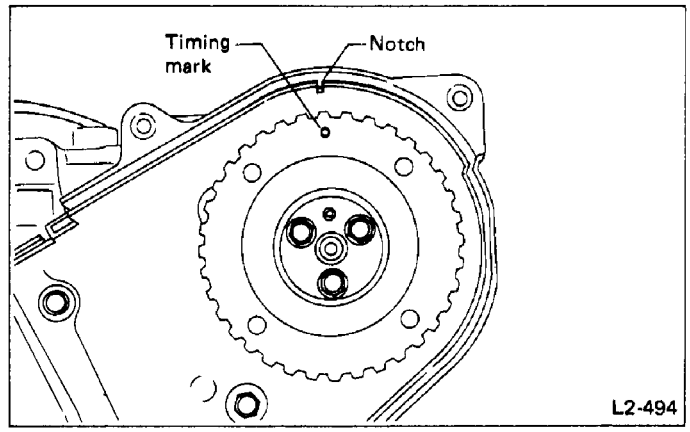

Fig. 24

(5) Attach timing belt No. 2 to crankshaft sprocket No. 2, oil pump sprocket, belt idler, camshaft sprocket, in that order, avoiding downward slackening of the belt.

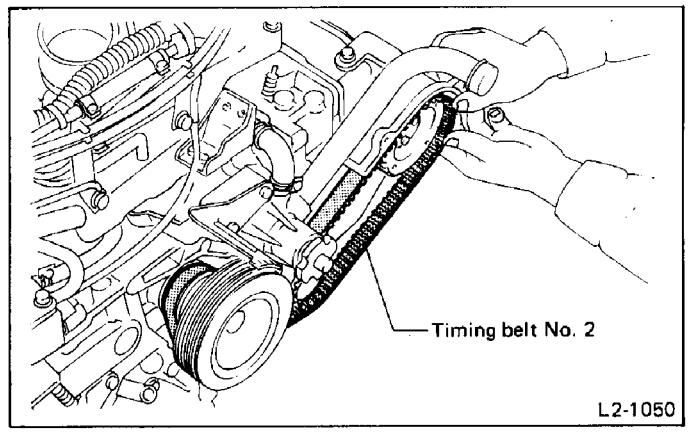

Fig. 25

(6) Loosen tensioner No. 2 tightening bolt ⓓ by 1/2 turn to apply tension to belt.
(7) Push timing belt by hand to ensure smooth movement of tensioner.

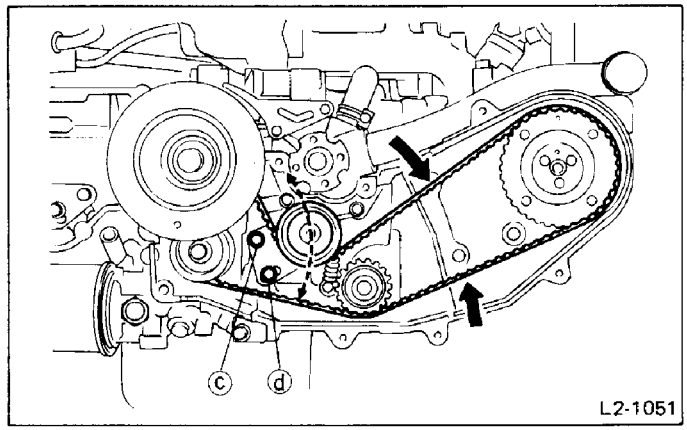

Fig. 26

(8) Apply the specified torque to camshaft sprocket in counterclockwise direction using BELT TENSION WRENCH. While applying torque, tighten tensioner No. 2 bolt ⓓ temporarily, then tighten bolt ⓒ temporarily.

When torquing sprocket, be extremely careful not to apply excessive force to it. Excessive belt tension will greatly reduce belt life.

Belt tension	Torque to cam sprocket
147 – 245 N (15 – 25 kg, 33 – 55 lb)	24 – 25 N·m (2.4 – 2.6 kg-m, 17 – 19 ft-lb)

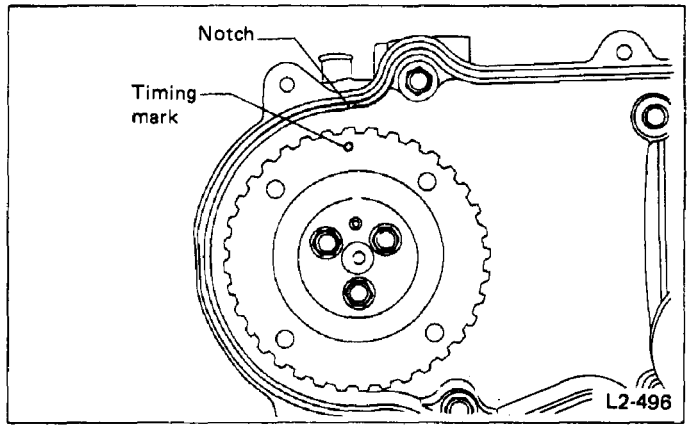

Fig. 28

(13) Attach timing belt to crankshaft sprocket and camshaft sprocket, avoiding slackening of belt on the upper side.

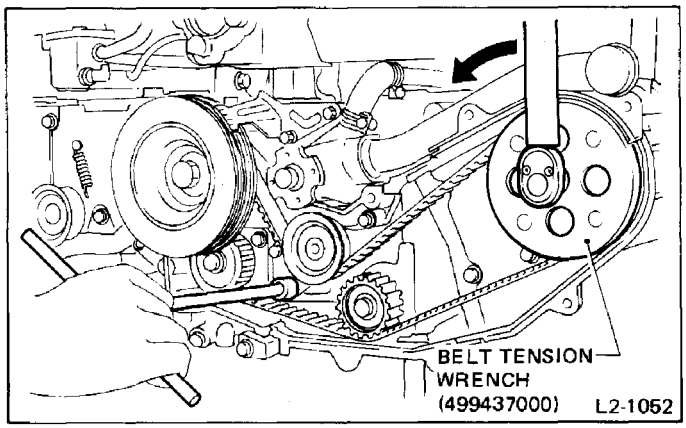

Fig. 27

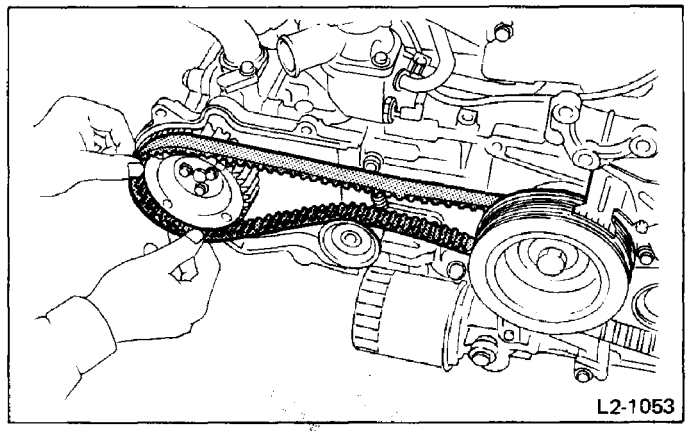

Fig. 29

(9) Tighten bolt ⓓ and bolt ⓒ, in that order, to the specified torque.

Tightening torque:
17.2 – 20.1 N·m (1.75 – 2.05 kg-m, 12.7 – 14.8 ft-lb)

(10) Ascertain that flywheel timing mark and camshaft sprocket LH timing mark are in their normal positions.
(11) Turn crankshaft one turn clockwise from the position where timing belt No. 2 was installed, and align the center of three lines scribed on the flywheel with timing mark on flywheel housing.
(12) Align timing mark on camshaft sprocket RH with the notch in belt cover.

(14) Loosen tensioner bolt ⓑ 1/2 turn to apply tension to belt.
(15) Push timing belt by hand to ensure smooth tensioner movement.

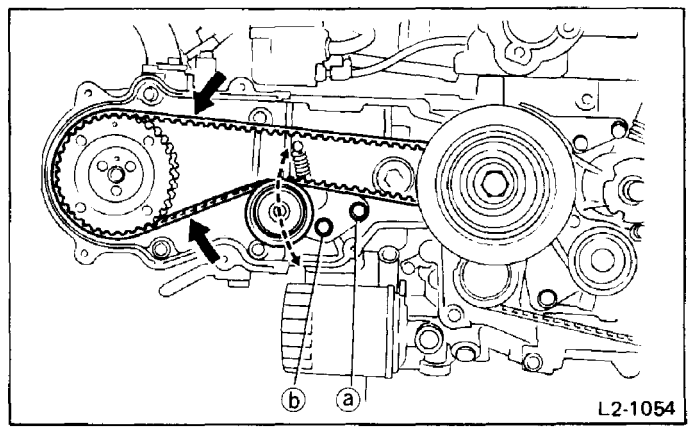

Fig. 30

(16) Apply the specified torque (same as camshaft sprocket LH) to camshaft sprocket RH in counterclockwise direction using BELT TENSION WRENCH. While applying torque, tighten tensioner No. 2 bolt ⓑ temporarily, then tighten bolt ⓐ temporarily.

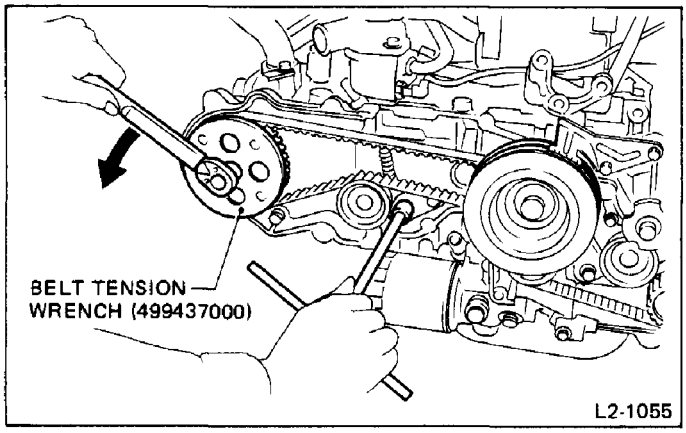

Fig. 31

(17) Tighten bolt ⓑ and bolt ⓐ, in that order, to the specified torque.

Tightening torque:
17.2 – 20.1 N·m (1.75 – 2.05 kg-m, 12.7 – 14.8 ft-lb)

(18) Make sure that flywheel timing mark and camshaft sprocket RH timing mark are in their normal positions.
(19) Remove crankshaft pulley.

Do not remove sprocket with crankshaft pulley.

10) Install belt cover FR seal, belt cover RR seal, and belt cover plug to belt cover FR, then install belt cover FR to cylinder block.

Before installing belt cover, ensure that no foreign matter such as nut or washer is in it.

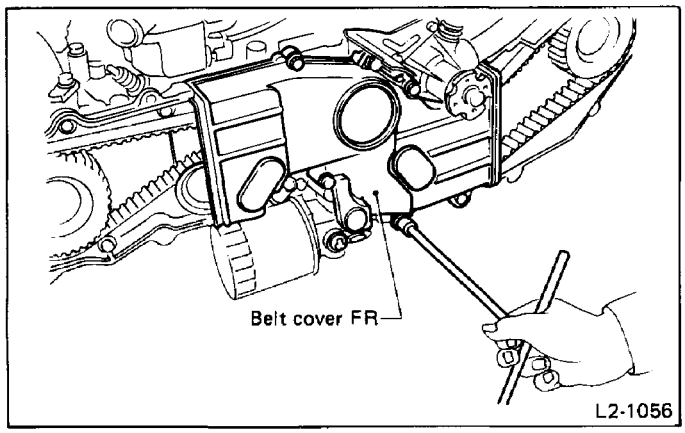

Fig. 32

11) Install belt covers LH and RH.
12) Insert crank pulley to crankshaft using FLYWHEEL STOPPER (498277000) [manual transmission model] or DRIVE PLATE STOPPER (498497000) [automatic transmission model] to lock crankshaft.

Tightening torque:
89 – 107 N·m (9.1 – 10.9 kg-m, 66 – 79 ft-lb)

13) Install water pump pulley and pulley cover to water pump ASSY, and tighten nuts temporarily.
14) Install oil level gauge and gauge guide. Apply engine oil to O-ring beforehand.
15) Connect lead to oil pressure switch.
16) Install V-belt and apply proper tension to the belt.
17) Tighten water pump pulley mounting nuts or bolts to the specified torque.

Tightening torque:
9.1 – 10.5 N·m (0.93 – 1.07 kg-m, 6.7 – 7.7 ft-lb)

Camshaft and Valve Rocker

REMOVAL

1) Removing distributor
   (1) Disconnect spark plug cords from distributor.
   (2) Remove distributor by removing mounting bolts.
2) Remove timing belt, belt cover and related parts. (Refer to "Timing Belt and Belt Cover".)
3) Remove water pipe.
4) Remove oil filler duct.
5) Remove PCV hoses from rocker cover.

6) Remove valve rocker covers and gaskets.
7) Remove camshaft cases, camshaft support, and camshaft as a unit.

When removing camshaft case, valve rockers may come off. To prevent them from being damaged, be sure to place waste cloth or rubber mat under cylinder head.

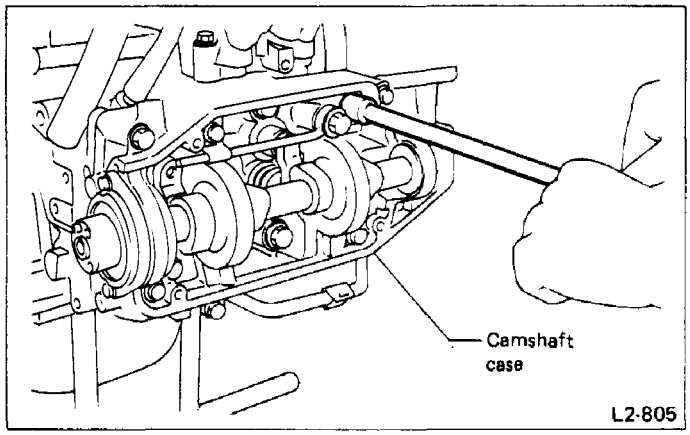

Fig. 33

8) Remove valve lash adjusters from cylinder head.

a. Do not lay down removed adjusters; keep them erect.
b. Retain removed valve rockers and adjusters in the order of their removal so that they can be reinstalled correctly.

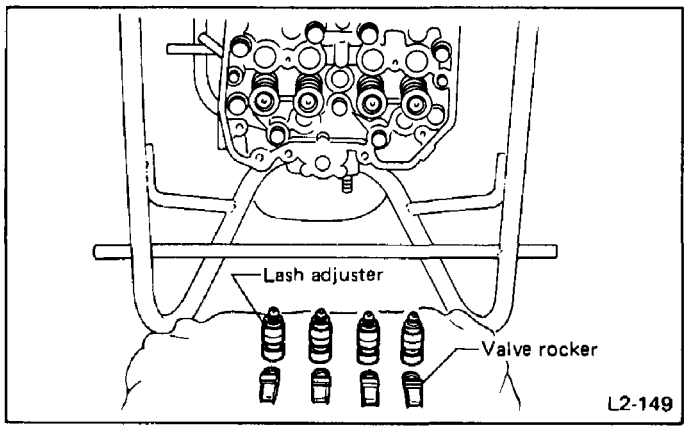

Fig. 34

DISASSEMBLY

1) Remove camshaft support.
2) Remove camshaft.

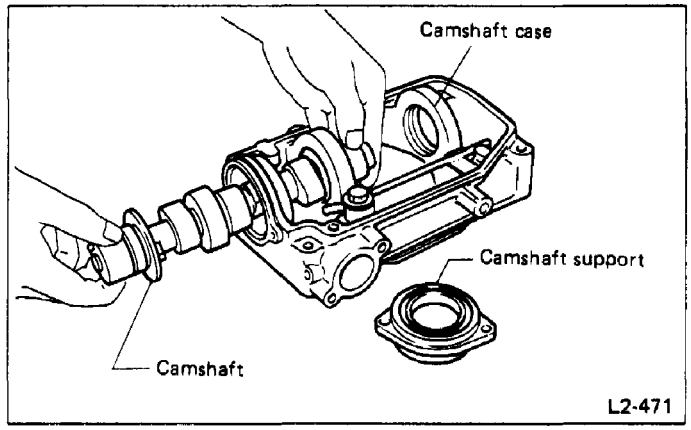

Fig. 35

3) Remove oil relief plug, then remove oil relief pipe, relief valve spring, and relief valve.

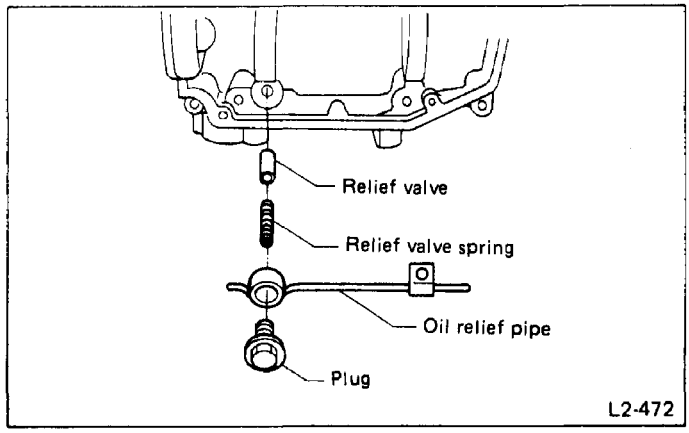

Fig. 36

INSPECTION

CAMSHAFT

1) Measure the bend, and repair or replace if necessary.

Limit:
0.025 mm (0.0010 in)

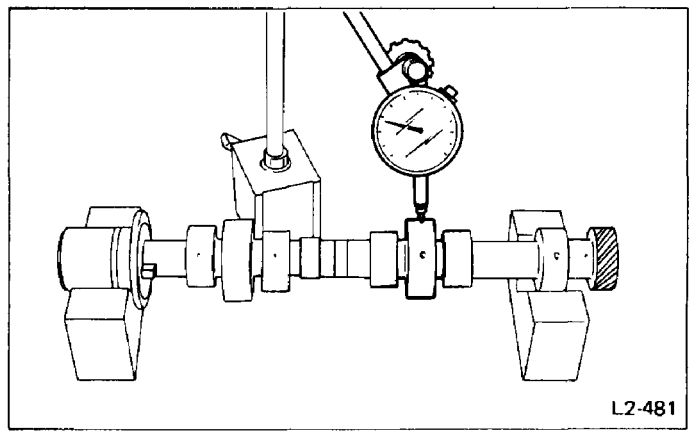

Fig. 37

2) Check journal for damage and wear. Replace if faulty.

Item		Front	Center	Rear	LH distributor
Cam case journal hole I.D.		38.000 – 38.018 mm (1.4961 – 1.4968)*1	48.500 – 48.518 mm (1.9094 – 1.9102 in)	48.000 – 48.018 mm (1.8898 – 1.8905 in)	39.000 – 39.018 mm (1.5354 – 1.5361 in)
Camshaft journal O.D.		37.964 – 37.980 mm (1.4946 – 1.4953 in)	48.464 – 48.480 mm (1.9080 – 1.9087 in)	47.964 – 47.980 mm (1.8883 – 1.8890 in)	38.964 – 38.980 mm (1.5340 – 1.5346 in)
Clearance at journal	Standard	0.020 – 0.054 mm (0.0008 – 0.0021 in)			
	Limit	0.070 mm (0.0028 in)			

*1: Camshaft support I.D.

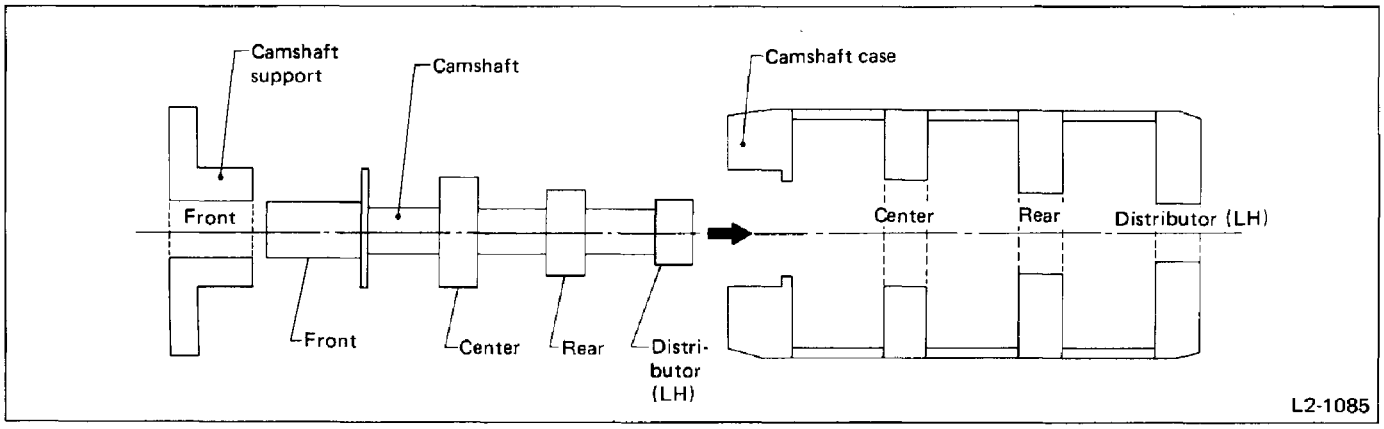

Fig. 38

3) Check cam face condition; remove minor faults by grinding with oil stone. Measure the cam height H; replace if the limit has been exceeded.

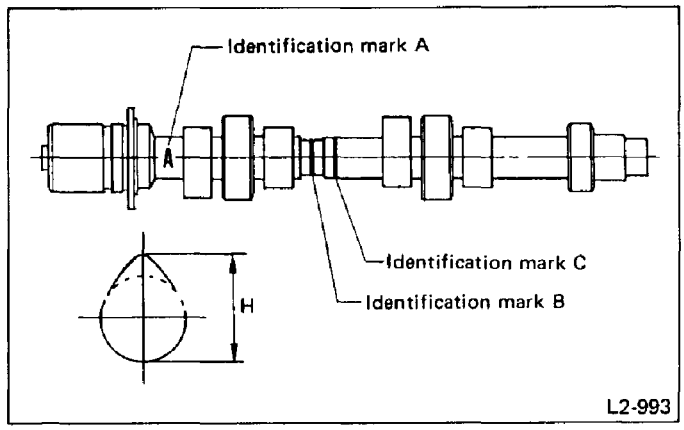

Fig. 39

Identification mark A	Identification mark B	Identification mark C	Height H mm (in)	Wear limit mm (in)
A	0	1	39.80 ± 0.05 (1.5669 ± 0.0020)	0.15 (0.0059)

4) Measure backlash between distributor drive gear and distributor driven gear. If the limit is exceeded, replace distributor drive gear.

Backlash:
Standard
0.015 – 0.126 mm (0.0006 – 0.0050 in)
Limit
0.180 mm (0.0071 in)

5) Replace gear using a press and CAMSHAFT HOLDER (498027000).

VALVE ROCKER

If cam or valve contact surface of valve rocker is worn or dented, repair by removing the minimum necessary amount. If worn heavily, replace valve rocker.

VALVE LASH ADJUSTER

1) With adjuster set in vertical position, push adjuster pivot quick and hard by hand.
If pivot is depressed more than 0.5 mm (0.020 in), put adjuster in a container filled with light oil, and move plunger up and down until the depression is less than 0.5 mm (0.020 in).

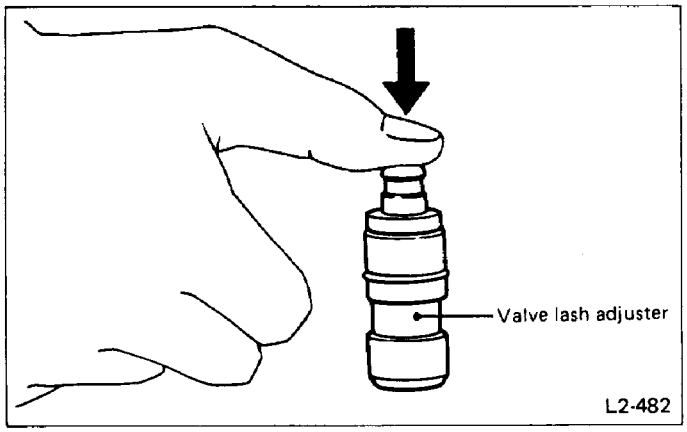

Fig. 40

2) If pivot is depressed more than 0.5 mm (0.020 in) even after repeating the above procedure, replace adjuster.

The new adjuster is provided with a pin which must be removed before using.

ASSEMBLY

1) Press-fit oil seal into camshaft support by using INSTALLER (498037000), then attach O-ring.
2) Install oil relief valve, relief valve spring, oil relief pipe, and oil relief plug to camshaft case.

Tightening torque:
23 – 26 N·m (2.3 – 2.7 kg-m, 17 – 20 ft-lb)

3) Install woodruff key to camshaft, then press-fit distributor drive gear by using CAMSHAFT HOLDER (498027000).
4) Insert camshaft into camshaft case, and install camshaft support.

Tightening torque:
5.9 – 6.9 N·m (0.60 – 0.70 kg-m, 4.3 – 5.1 ft-lb)

INSTALLATION

1) Insert valve lash adjusters into cylinder head.

Be sure to insert each valve lash adjuster to its original position.

2) Apply grease to spherical surface and sliding surface of each valve rocker, then secure valve rockers to the respective valve adjusters and valves.

Be sure to apply grease; otherwise, valve rocker will drop off.

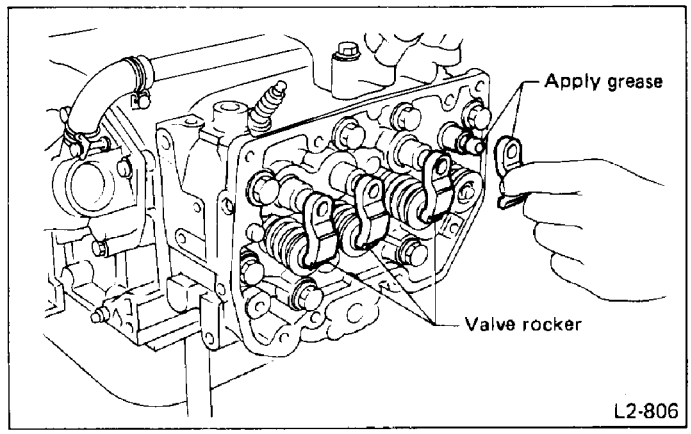

Fig. 41

3) Install O-ring to camshaft case by setting camshaft so that camshaft straight pin is oriented as shown.

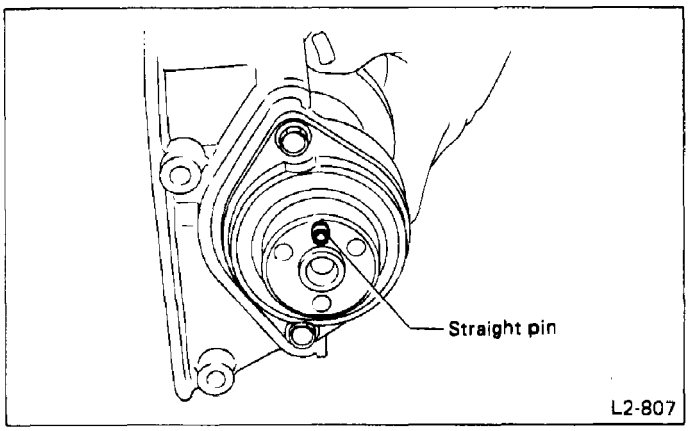

Fig. 42

4) Apply fluid packing (Three-bond 1215, or equivalent) to groove of each camshaft case, then install to cylinder head.

After installing, abundantly apply engine oil to sliding surfaces of cam and valve rocker.

Tightening torque:
17.2 – 20.1 N·m (1.75 – 2.05 kg-m, 12.7 – 14.8 ft-lb)

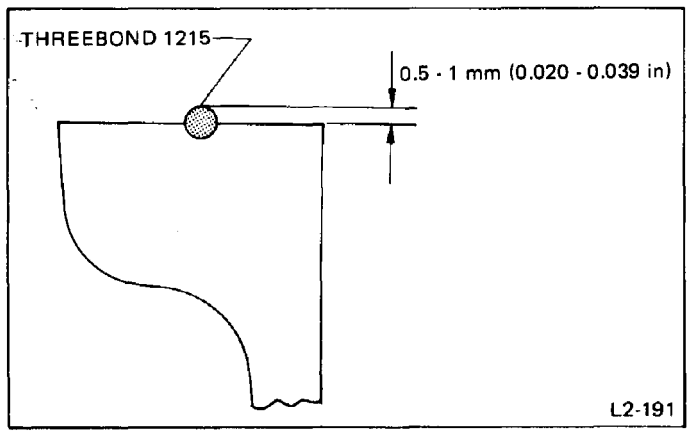

Fig. 43

5) Attach gaskets to valve rocker covers, and install the covers to camshaft cases with rocker cover washers and bolts.

Be extremely careful not to cause oil to leak from mating faces of valve rocker cover and camshaft case.

Tightening torque:
4.4 – 5.4 N·m (0.45 – 0.55 kg-m, 3.3 – 4.0 ft-lb)

6) Install PCV hoses.
7) Install oil filler duct.
8) Install water pipe.
9) Install timing belt, belt cover and related parts. (Refer to "Timing Belt and Belt Cover".)
10) Install distributor, proceeding as follows:
(1) Bring #1 cylinder piston to its top dead center on compression stroke. Set camshaft sprocket to the position shown in Figure.

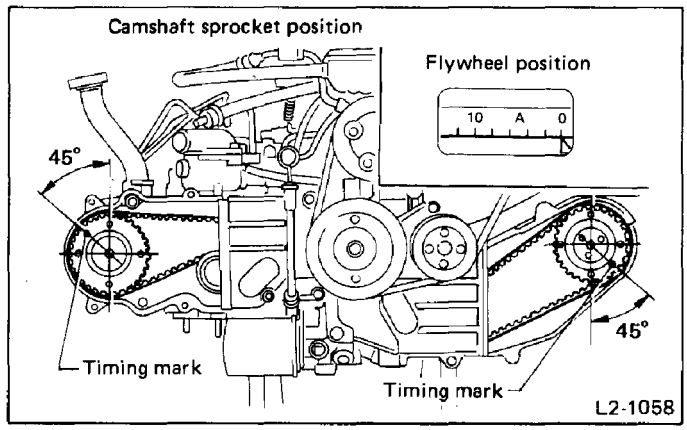

Fig. 44

(2) Align distributor housing match mark with pinion gear match mark to set #1 cylinder at igniting position.

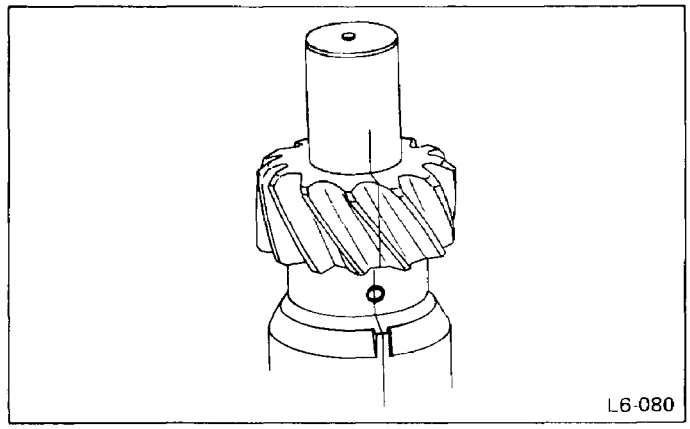

Fig. 45

(3) Install distributor to camshaft case.
(4) Connect lead wires.
(5) Install plug cord and high-tension cord.
11) Install right and left belt covers.

Cylinder Head

REMOVAL

1) Remove timing belt, belt cover and related parts. (Refer to "Timing Belt and Belt Cover".)
2) Remove camshaft cases, lash adjuster and related parts. (Refer to "Camshaft and Valve Rocker".)
3) Remove bolt attaching alternator bracket to cylinder head. [Except air conditioner model]
4) Remove bolt attaching adjusting bar to cylinder head. [Except air conditioner model]
5) Remove bolts attaching intake manifold to cylinder head, and then lift intake manifold from cylinder head.

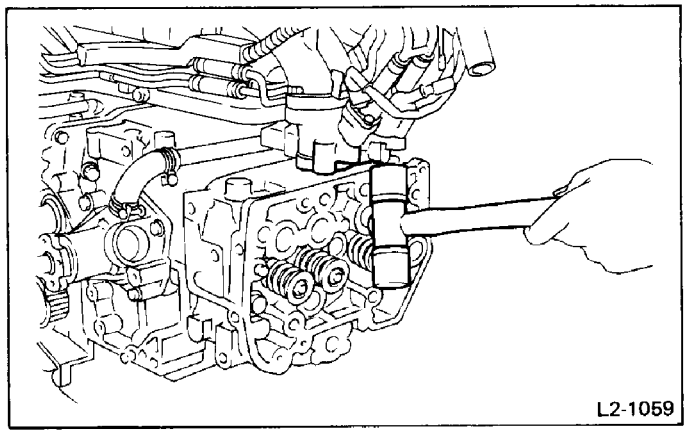

Fig. 46

6) Remove bolt attaching water by-pass pipe bracket to cylinder head.

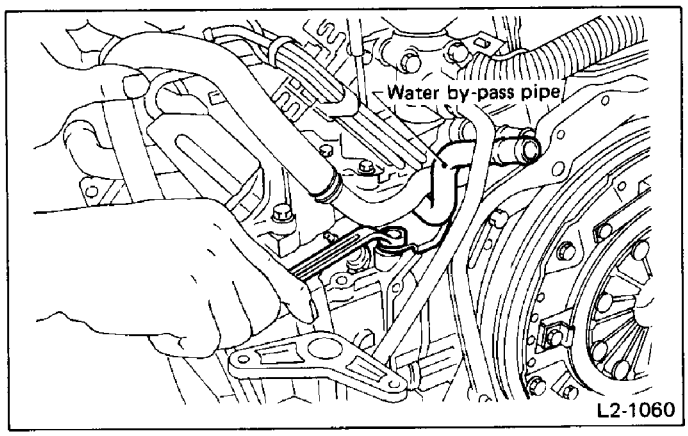

Fig. 47

7) Remove spark plugs.
8) Remove cylinder heads and gaskets from cylinder block.
9) Using VALVE SPRING PRESS ASSY (899724100), compress the valve spring and remove the valve spring retainer key. Remove each valve and valve spring.

a. Mark each valve to prevent confusion.
b. Use extreme care not to damage the lips of the intake valve oil seals and exhaust valve oil seals.

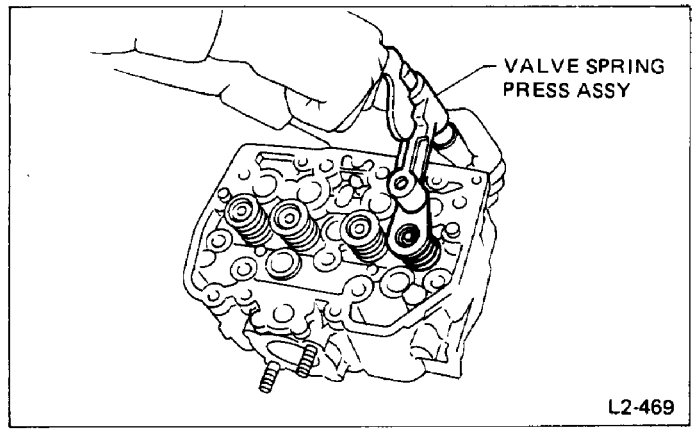

Fig. 48

INSPECTION

CYLINDER HEAD

1) Make sure that no crack or other damage exists. In addition to visual inspection, inspect important areas by means of red check.
2) Measure the warping of the cylinder head surface that mates with crankcase by using a straight edge and thickness gauge.

If the warping exceeds 0.05 mm (0.0020 in), regrind the surface with a surface grinder.

Warping limit:
0.05 mm (0.0020 in)
Grinding limit:
0.3 mm (0.012 in)
Standard height of cylinder head:
90.6 mm (3.567 in)

Uneven torque for the cylinder head nuts can cause warping. When reassembling, pay special attention to the torque so as to tighten evenly.

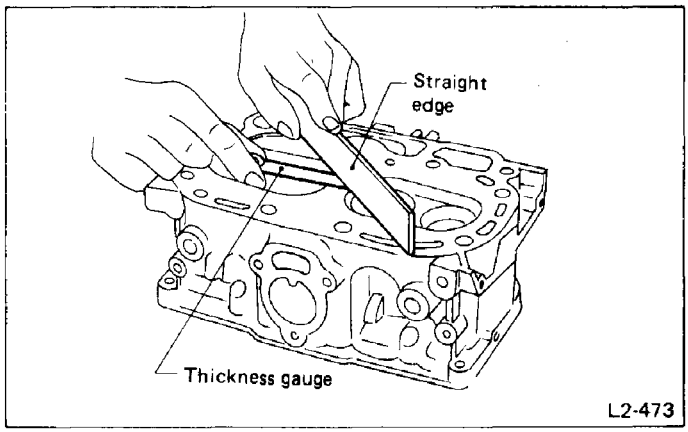

Fig. 49

3) Inspect intake and exhaust valve seats, and correct the contact surfaces with valve seat cutter if they are defective or when valve guides are replaced.

Contacting width: W
Intake
1.2 – 1.8 mm (0.047 – 0.071 in)
Exhaust
1.5 – 2.0 mm (0.059 – 0.079 in)
Wear limit of valve seat (measured in direction of valve axis):
0.5 mm (0.020 in) for both intake and exhaust valves

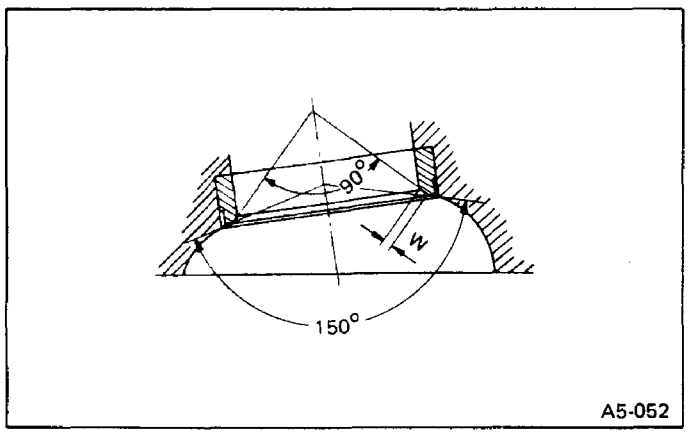

Fig. 50

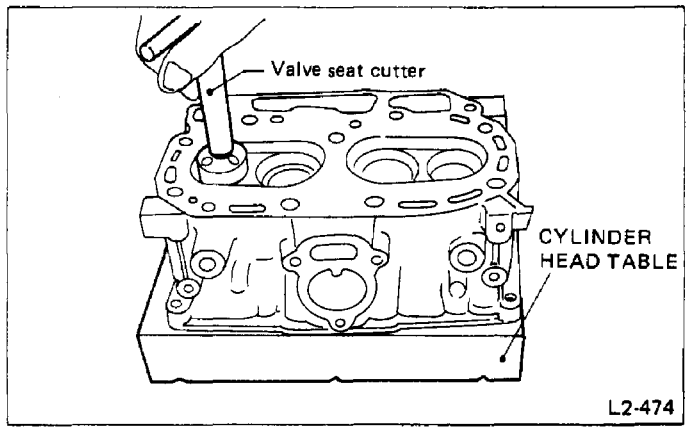

Fig. 51

VALVE GUIDE

1) Check the clearance between valve guide and stem. The clearance can be checked by measuring the outside diameter of valve stem and the inside diameter of valve guide with outside and inside micrometers respectively.

Specifications for valve stem and valve guide		
Standard clearance between valve guide and valve stem	Intake	0.035 – 0.065 mm (0.0014 – 0.0026 in)
	Exhaust	0.040 – 0.070 mm (0.0016 – 0.0028 in)
Limit of clearance between valve guide and valve stem		0.15 mm (0.0059 in)
Standard inside diameter of valve guide		7.000 – 7.015 mm (0.2756 – 0.2762 in)
Standard diameter of valve stem	Intake	6.950 – 6.965 mm (0.2736 – 0.2742 in)
	Exhaust	6.945 – 6.960 mm (0.2734 – 0.2740 in)

2) If the clearance between valve guide and stem exceeds the specification, replace guide as follows:
(1) Place cylinder head on CYLINDER HEAD TABLE with the combustion chamber upward so that valve guides enter the holes in CYLINDER HEAD TABLE.
(2) Insert VALVE GUIDE REMOVER into valve guide and press it down to remove valve guide.

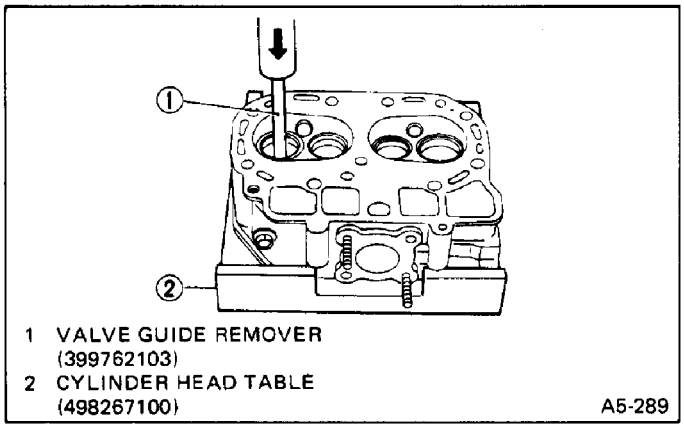

Fig. 52

(3) Turn cylinder head upside down and place VALVE GUIDE ADJUSTER as shown in the figure.

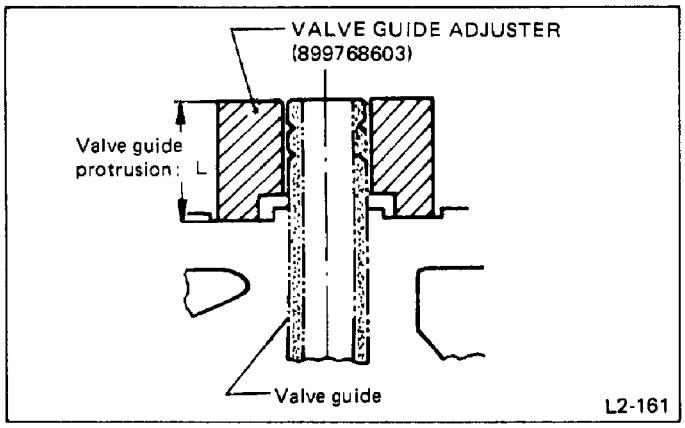

Fig. 53

(4) Before installing new valve guide, make sure that neither scratches nor damages exist on the inside surface of the valve guide holes in cylinder head.

(5) Put new valve guide, coated with sufficient oil, in cylinder, and insert VALVE GUIDE REMOVER into valve guide. Press in until the valve guide upper end is flush with the upper surface of VALVE GUIDE ADJUSTER.

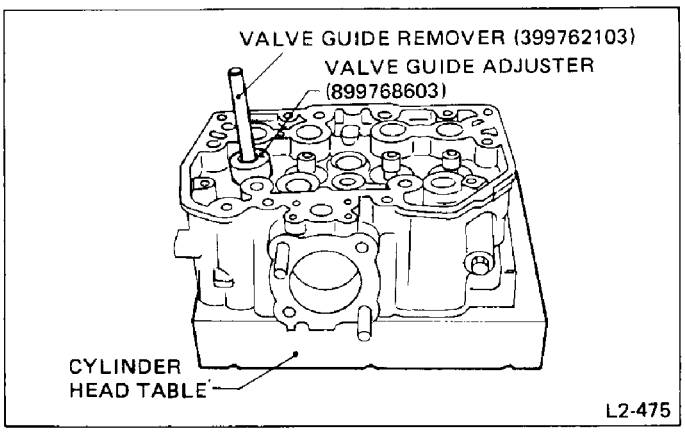

Fig. 54

(6) Check the valve guide protrusion.

Valve guide protrusion: L
17.5 – 18.5 mm (0.689 – 0.728 in)

(7) Ream the inside of valve guide with VALVE GUIDE REAMER (399762104). Gently rotate the reamer clockwise while pressing it lightly into valve guide, and return it also rotating clockwise. After reaming, clean valve guide to remove chips.

a. Apply engine oil to the reamer when reaming.
b. If the inner surface of the valve guide is torn, the edge of the reamer should be slightly ground with an oil stone.
c. If the inner surface of the valve guide becomes lustrous and the reamer does not cut chips, use a new reamer or remedy the reamer.

(8) Recheck the contact condition between valve and valve seat after replacing valve guide.

INTAKE AND EXHAUST VALVE OIL SEAL

Replace oil seal with new one, if lip is damaged or spring is out of place, or when the surfaces of intake valve and valve seat are reconditioned or intake valve guide is replaced.
Press in oil seal to the specified dimension indicated in the figure, using OIL SEAL INSTALLER.

a. Apply engine oil to oil seal before force-fitting.
b. Differentiate between intake valve oil seal and exhaust valve oil seal by noting their difference in height.

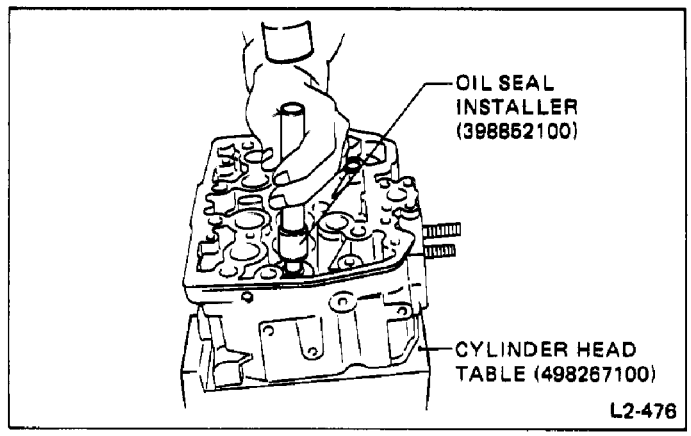

Fig. 55

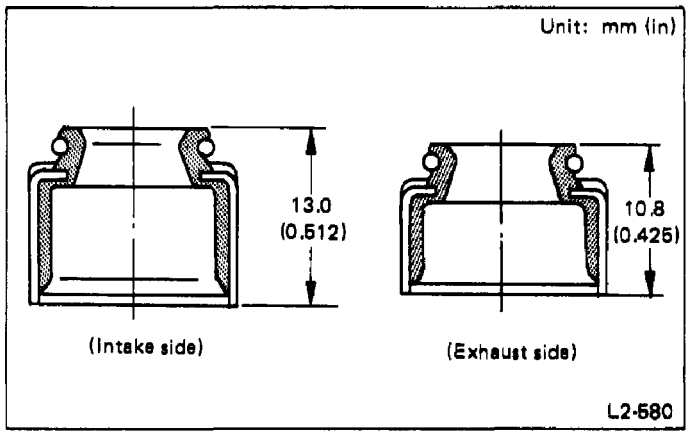

Fig. 56

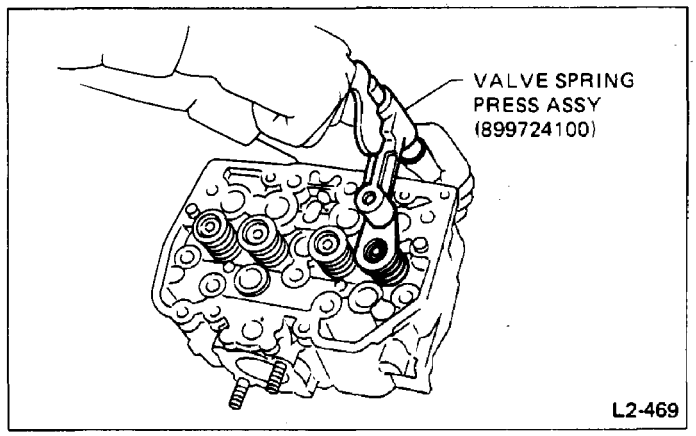

Fig. 58

INSTALLATION

1) Install the oil seals to the valve guides using OIL SEAL INSTALLER.

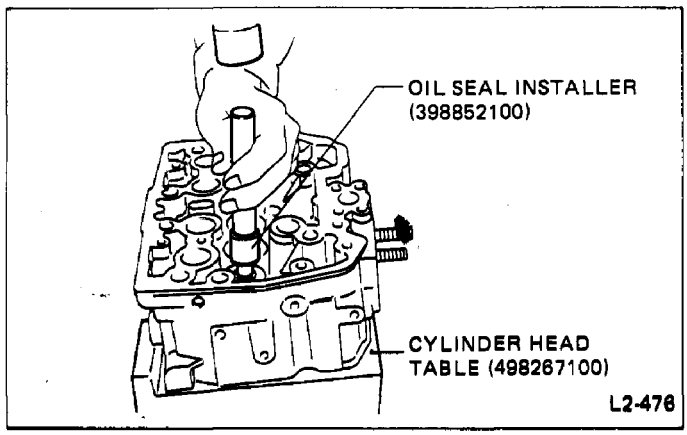

Fig. 57

2) Coat the stem of each valve with engine oil and insert the valve into the valve guide. Attach the valve springs and retainer. Then compress the valve springs using VALVE SPRING PRESS and fit the valve spring retainer key.

a. After installing, tap the valve spring retainers lightly with a wooden hammer for better seating.
b. When inserting the valve into the valve guide, use special care not to damage the oil seal lip.
c. Be sure to install the valve springs with their close-coiled end facing the seat on the cylinder head.

3) Install cylinder heads to cylinder block with new gaskets.

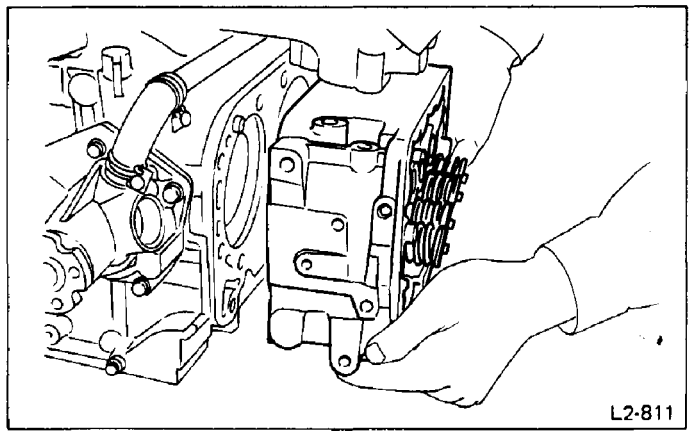

Fig. 59

When tightening bolts, apply oil to the threads and tighten them in two or three successive steps until the final tightening is at the specified torque.
In each step, tighten them in the specified sequence.

1st step:
29 N·m (3.0 kg-m, 22 ft-lb)
2nd step:
59 N·m (6.0 kg-m, 43 ft-lb)
3rd (final) step:
64 N·m (6.5 kg-m, 47 ft-lb)

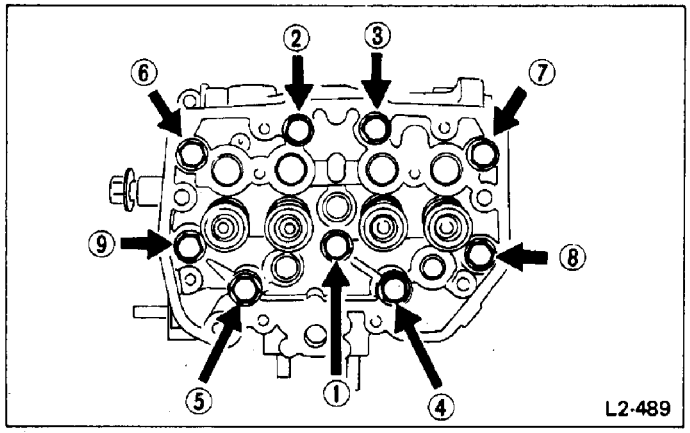

Fig. 60

4) Install spark plugs.

Tightening torque:
18 – 24 N·m (1.8 – 2.4 kg-m, 13 – 17 ft-lb)

5) Install bolt attaching water by-pass pipe bracket to cylinder head.
6) Install bolts attaching intake manifold collector to intake manifold.
7) Install bolts attaching intake manifold to cylinder head.

Tightening torque:
18 – 22 N·m (1.8 – 2.2 kg-m, 13 – 16 ft-lb)

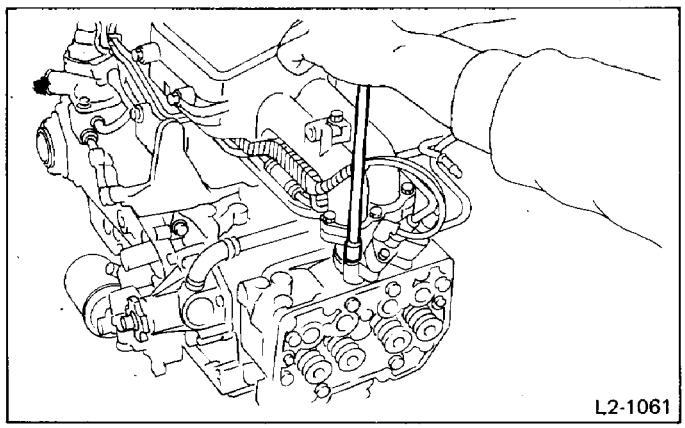

Fig. 61

8) Install bolt attaching adjusting bar to cylinder head.

Tightening torque:
16 – 22 N·m (1.6 – 2.2 kg-m, 12 – 16 ft-lb)

9) Install bolts attaching alternator bracket to cylinder head.

Tightening torque:
36 – 42 N·m (3.7 – 4.3 kg-m, 27 – 31 ft-lb)

10) Install camshaft cases, lash adjustor and related parts. (Refer to "Camshaft and Valve Rocker".)
11) Install timing belt, belt cover and related parts. (Refer to "Timing Belt and Belt Cover".)

After completing engine ASSY and mounting engine on car, be sure to retighten cylinder head bolts.
(Refer to "2-2 ON-CAR SERVICES".)

Valve and Valve Spring

REMOVAL

1) Remove cylinder head from engine ASSY.
(Refer to "Cylinder Head".)
2) Using VALVE SPRING PRESS ASSY, compress the valve spring and remove the valve spring retainer key. Remove each valve and valve spring.

a. Mark each valve to prevent confusion.
b. Use extreme care not to damage the lips of the intake valve oil seals and exhaust valve oil seals.

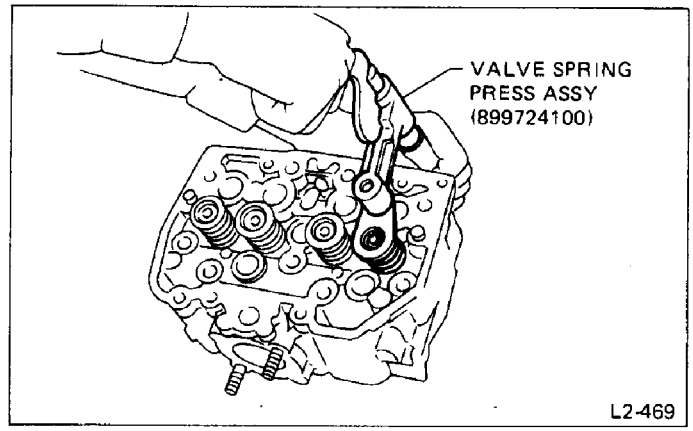

Fig. 62

INSPECTION

INTAKE AND EXHAUST VALVE

1) Inspect the flange and stem of valve, and replace if damaged, worn, or deformed, or if "H" is less than the specified limit.

Head edge thickness: H
Intake & Exhaust
Standard
1.3 mm (0.051 in)
Limit
0.8 mm (0.031 in)
Valve overall length:
Intake & Exhaust
107.58 mm (4.235 in)

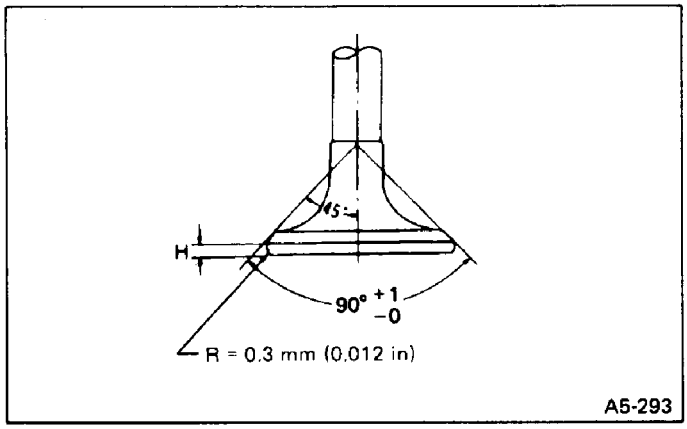

Fig. 63

2) If the contact surface of valve is damaged, or if the stem end is recessed, correct with a valve refacer, grinding as little as possible. The contact surface should be at right angle with the Valve axis. [Intake valve only]

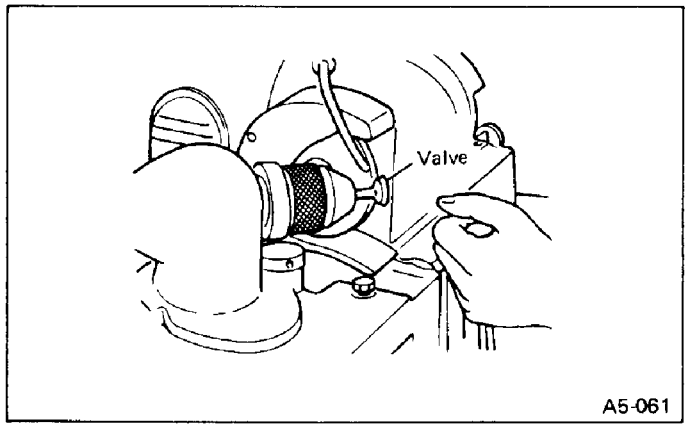

Fig. 64

3) Put a small amount of grinding compound on the seat surface and lap the valve and seat surface. Also refer to "Cylinder Head" 3) at this time. Install a new intake valve oil seal after lapping.

VALVE SPRINGS

1) Check valve springs for damage, free length, and tension. Replace valve spring if it is not to the specifications presented below.
2) To measure the squareness of the valve spring, stand the spring on a surface plate and measure its deflection at the top using a try square.

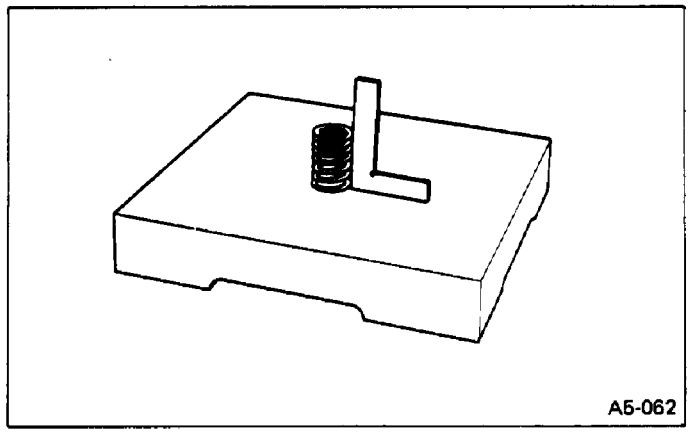

Fig. 65

	Outer spring	Inner spring
Free length	50.7 mm (1.996 in)	50.3 mm (1.980 in)
Tension/ spring height	203.0 – 238.3 N (20.7 – 24.3 kg, 45.6 – 53.6 lb)/ 41.5 mm (1.634 in)	88.3 – 101.0 N (9.0 – 10.3 kg, 19.8 – 22.7 lb)/ 38.5 mm (1.516 in)
	502.1 – 576.7 N (51.2 – 58.8 kg, 112.9 – 129.7 lb)/ 31.5 mm (1.240 in)	201.0 – 230.5 N (20.5 – 23.5 kg, 45.2 – 51.8 lb)/ 28.5 mm (1.122 in)
Squareness	2.2 mm (0.087 in)	2.2 mm (0.087 in)

ASSEMBLY

Coat the stem of each valve with engine oil and insert the valve into the valve guide. Attach the valve springs and retainer. Then compress the valve springs using VALVE SPRING PRESS (899724100) and fit the valve spring retainer key.

a. After installing, tap the valve spring retainers lightly with a wooden hammer for better seating.
b. When inserting the valve into the valve guide, use special care not to damage the oil seal lip.
c. Be sure to install the valve springs with their close-coiled end facing the seat on the cylinder head.

Cylinder Block

REMOVAL

1) Remove distributor and plug cord.

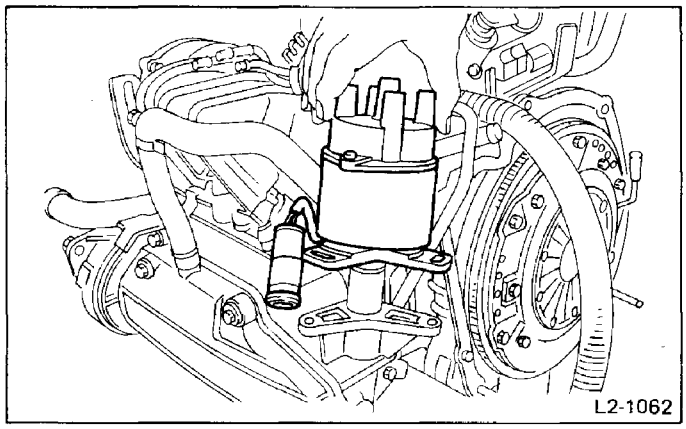

Fig. 66

2) Loosen water pump pulley mounting nuts or bolts.
3) Remove alternator and V-belt. [Except air conditioner equipped model]
4) Removal of intake manifold ASSY
   (1) Remove hoses and tubes from cylinder block side.
   (2) Disconnect each harness.
   (3) Remove intake manifold ASSY from engine.
5) Remove power steering oil pump bracket from cylinder block. [Power steering model]
6) Remove alternator brackets and adjusting bar. [All except air-conditioner models]
7) Remove air bleed hose.
8) Remove oil filler duct.
9) Remove water pipe.
10) Remove crankshaft pulley. To lock crankshaft, use FLYWHEEL STOPPER (498277000) [manual transmission model] or DRIVE PLATE STOPPER (498497000) [automatic transmission model].

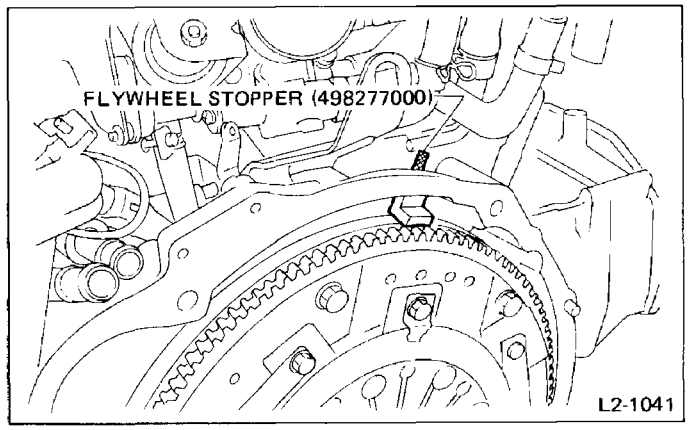

Fig. 67

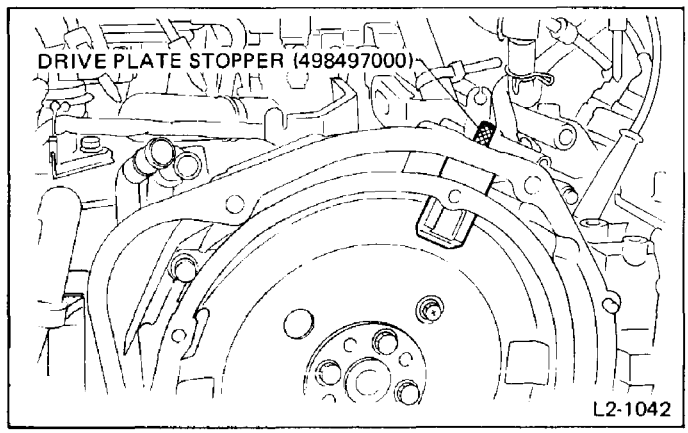

Fig. 68

11) Remove water pump pulley and pulley cover.
12) Remove oil level gauge guide together with gauge.
13) Remove timing belt, belt cover and related parts. (Refer to "Timing Belt and Belt Cover".)
14) Remove water pump together with hose, pipe and timing plate.
15) Remove oil pump by aligning notch in oil pump pulley with bolt position, then remove pump outer rotor from cylinder block.

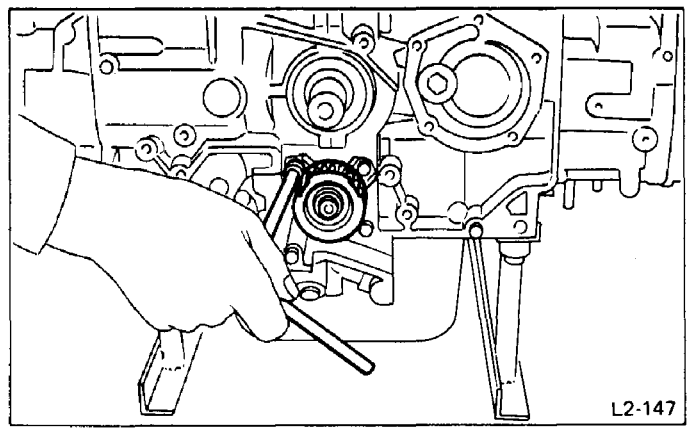

Fig. 69

16) Removing clutch cover and clutch disc. [All except automatic transmission model]

Be careful not to let oil, grease or coolant contact the clutch disc.

17) Remove flywheel [manual transmission model] or drive plate [automatic transmission model], and take out flywheel housing with housing cover. To lock crankshaft, use FLYWHEEL STOPPER (498277000) or DRIVE PLATE STOPPER (498497000).
18) Remove camshaft, valve rocker and related parts. (Refer to "Camshaft and Valve Rocker".)
19) Remove cylinder heads and gaskets.
20) Remove oil pan.
21) Remove oil strainer and strainer stays.

DISASSEMBLY

1) Remove oil separator cover.
2) Remove service hole plugs from cylinder block using hexagon wrench (14 mm).
3) Rotate crankshaft to bring #1 and #2 pistons to TDC position.
4) Remove piston circlip through service hole of #1 and #2 cylinders.

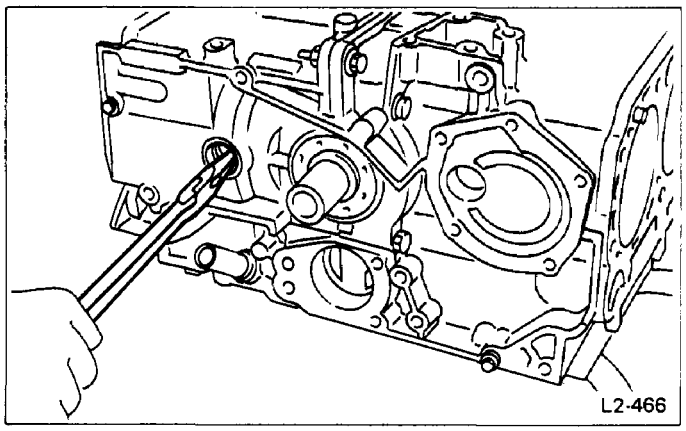

Fig. 70

5) Draw out piston pin from #1 and #2 pistons using PISTON PIN REMOVER (399094310).

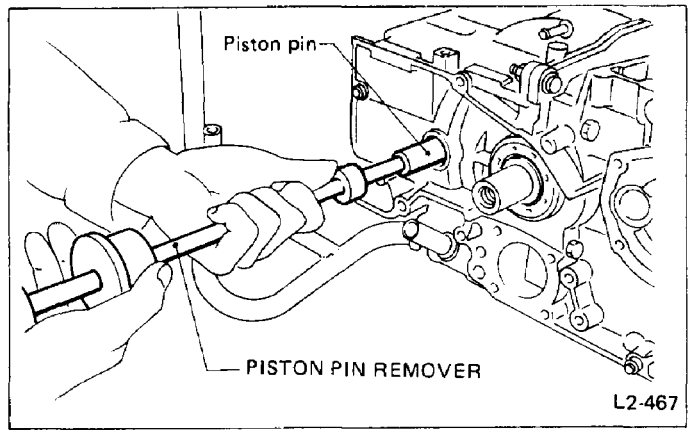

Fig. 71

6) Similarly remove piston pins from #3 and #4 pistons.

Be careful not to confuse original combination of piston, piston pin and cylinder.

7) Remove all of cylinder block connecting bolts except one 10-mm bolt under center journal. Loosen this 10-mm bolt until it can be turned by hand. (Cylinder block connecting bolts: six 10-mm bolts and six 8-mm bolts.)
8) Set up cylinder block so that #1 and #3 cylinders are on the upper side, then separate left-hand and right-hand cylinder blocks.

When separating cylinder block, do not allow the connecting rod to fall and damage the cylinder block.

9) Remove coolant passage O-ring and back-up ring from left-hand cylinder block.

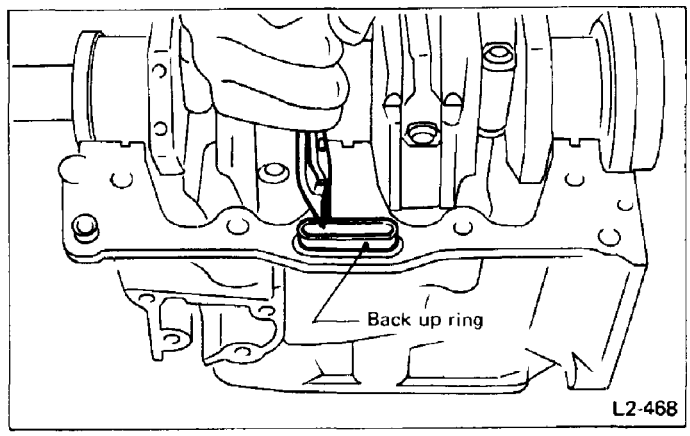

Fig. 72

10) Remove front oil seal and rear oil seal from crankshaft.
11) Remove crankshaft together with connecting rod from cylinder block.

12) Draw out each piston from cylinder block using wooden bar or hammer handle.

Do not confuse combination of piston and cylinder.

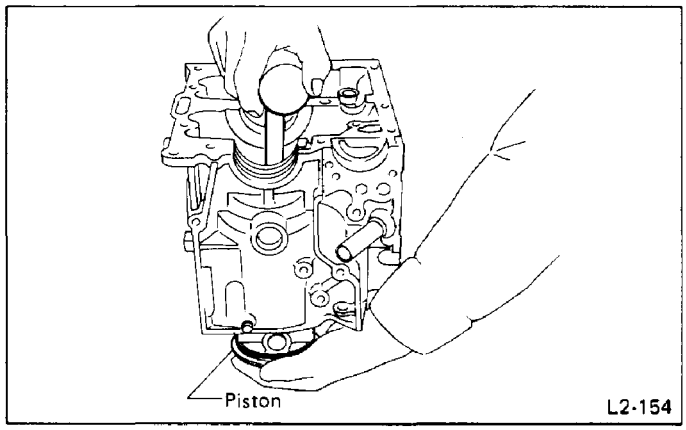

Fig. 73

13) Remove crankshaft bearings from cylinder block using hammer handle.

a. Do not confuse combination of crankshaft bearings. Press bearing at the end opposite to locking lip.
b. Do not confuse combination of crankshaft bearings.

INSPECTION

CYLINDER BLOCK

Check cylinder block for the following items, and correct or replace if defective.
1) Check for cracks and damage visually. Especially, inspect important parts by means of red check.
2) Check the oil passages for clogging.
3) Inspect the crankcase surface that mates with cylinder head for warping by using a straight edge, and correct by grinding if necessary.

Warping limit:
0.05 mm (0.0020 in)
Grinding limit:
0.4 mm (0.016 in)

CYLINDER AND PISTON

1) Measure the inner diameter of each cylinder in both the thrust and piston pin directions at the heights shown in the figure, using a cylinder bore gauge.

Measurement should be performed at a temperature of 20°C (68°F).

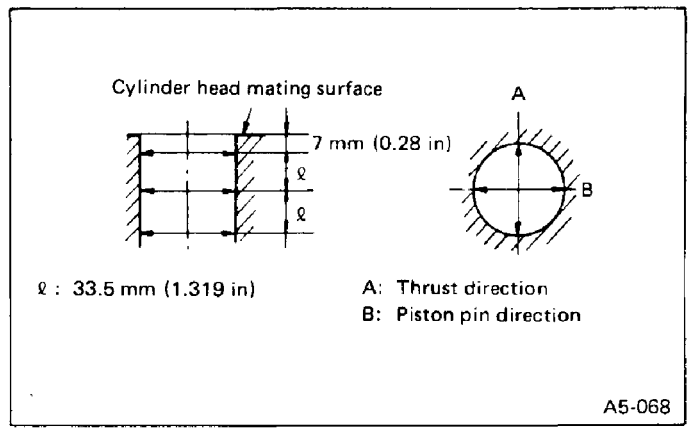

Fig. 74

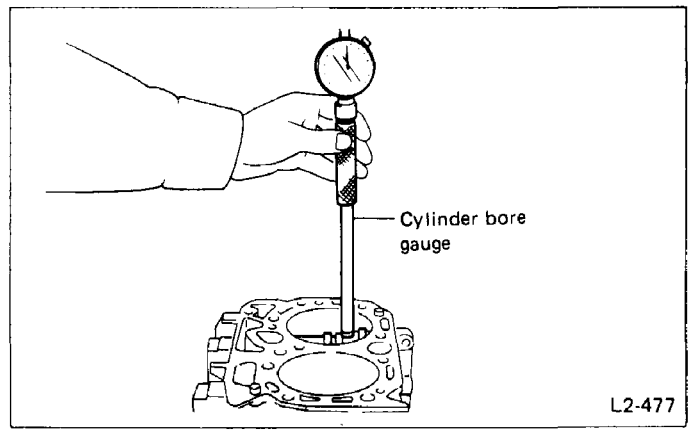

Fig. 75

Cylinder bore		
Standard diameter		91.985 – 92.015 mm (3.6214 – 3.6226 in)
Taper	Standard	0.015 mm (0.0006 in)
	Limit	0.050 mm (0.0020 in)
Out-of roundness	Standard	0.010 mm (0.0004 in)
	Limit	0.050 mm (0.0020 in)
Cylinder to piston clearance at 20°C (68°F)	Standard	0.015 – 0.035 mm (0.0006 – 0.0014 in)
	Limit	0.060 mm (0.0024 in)

2) Boring and honing

(1) If the value of taper, out-of-roundness, or cylinder-to-piston clearance measured exceeds the specified limit or if there is any damage on the cylinder wall, rebore it to use an oversize piston.

When any of the cylinders needs reboring, all other cylinders must be bored at the same time, and use oversize pistons. Do not perform boring on one cylinder only, nor use an oversize piston for one cylinder only.

(2) Get four of the oversize pistons and measure the outer diameter of each piston at the height shown in the figure. (Thrust direction)

Measurement should be performed at a temperature of 20°C (68°F).

Piston outer diameter:
Standard
91.970 – 91.980 mm (3.6209 – 3.6213 in)
0.25 mm (0.0098 in) oversize
92.220 – 92.230 mm (3.6307 – 3.6311 in)
0.50 mm (0.0197 in) oversize
92.470 – 92.480 mm (3.6405 – 3.6409 in)

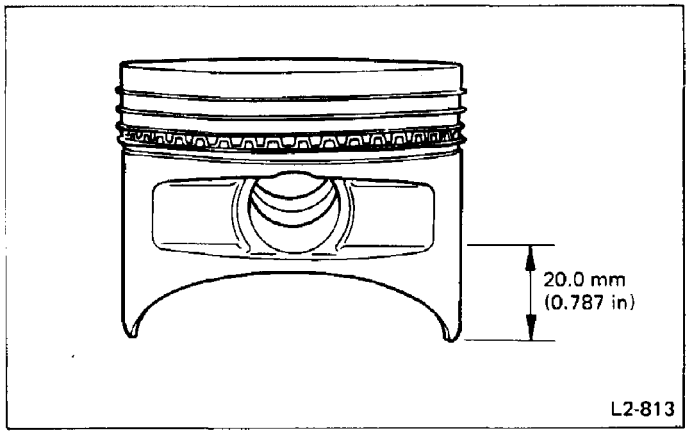

Fig. 76

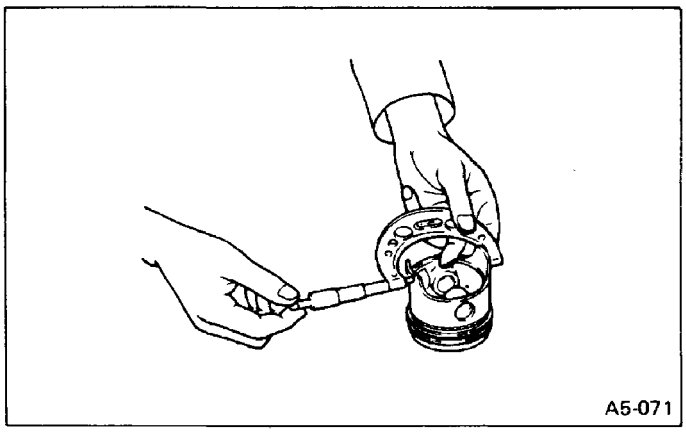

Fig. 77

(3) If the cylinder inner diameter exceeds the following enlarging limit after boring and honing, replace the crankcase.

Immediately after reboring, the cylinder diameter may differ from its real diameter due to temperature rise. Thus, pay attention to this when measuring the cylinder diameter.

Enlarging limit of cylinder inner diameter:
0.30 mm (0.0118 in)

(4) Inspect the cylinder bore for taper, out-of-roundness, and diameter differences.

Measure the inner diameter of the cylinder when the temperature is 20°C (68°F).

Diameter difference between cylinders:
0.050 mm (0.0020 in) or less

ASSEMBLY

1) Install ENGINE STANDS (499817100) to cylinder blocks. When installing ENGINE STANDS, fit bolts to the holes marked with "R" on the #1 and #3 cylinder sides, and to the holes marked with "L" on the #2 and #4 cylinder sides.
2) Install crankshaft bearings to cylinder blocks.
3) Install crankshaft to left-hand cylinder block.
4) Fit O-ring and back-up ring to coolant passage of left-hand cylinder block.
5) Apply fluid packing (Three-bond 1215, or equivalent) to mating surface of cylinder block.

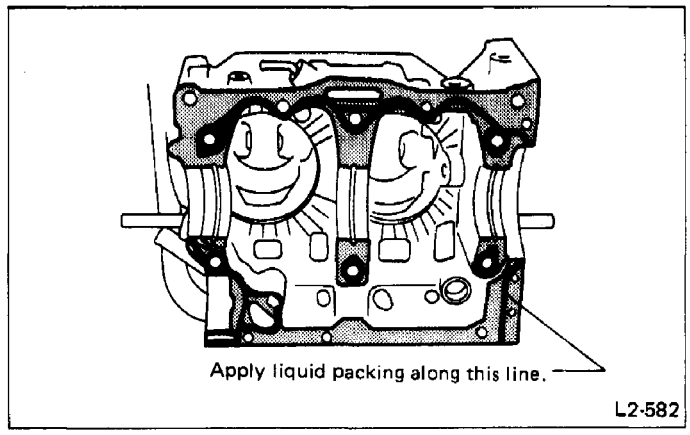

Fig. 78

6) With left-hand cylinder block facing down, install right-hand cylinder block. After tightening bolts temporarily, lay cylinder block down, then tighten bolts to the specified torque.

Make sure O-ring is fitted correctly in groove.

Tightening torque:
10 mm bolt
39 – 47 N·m (4.0 – 4.8 kg-m, 29 – 35 ft-lb)
8 mm bolt
23 – 26 N·m (2.3 – 2.7 kg-m, 17 – 20 ft-lb)

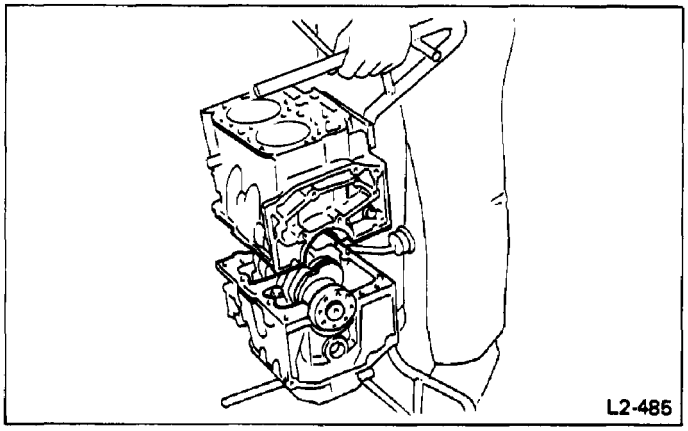

Fig. 79

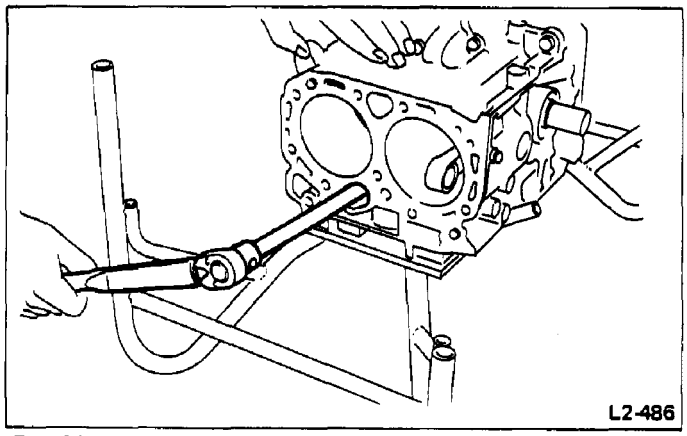

Fig. 80

7) Check thrust clearance of crankshaft.

Thrust clearance:
Standard
0.010 – 0.095 mm (0.0004 – 0.0037 in)
Limit
0.3 mm (0.012 in)

8) Position the gaps of the piston rings and oil ring as shown in the figure.

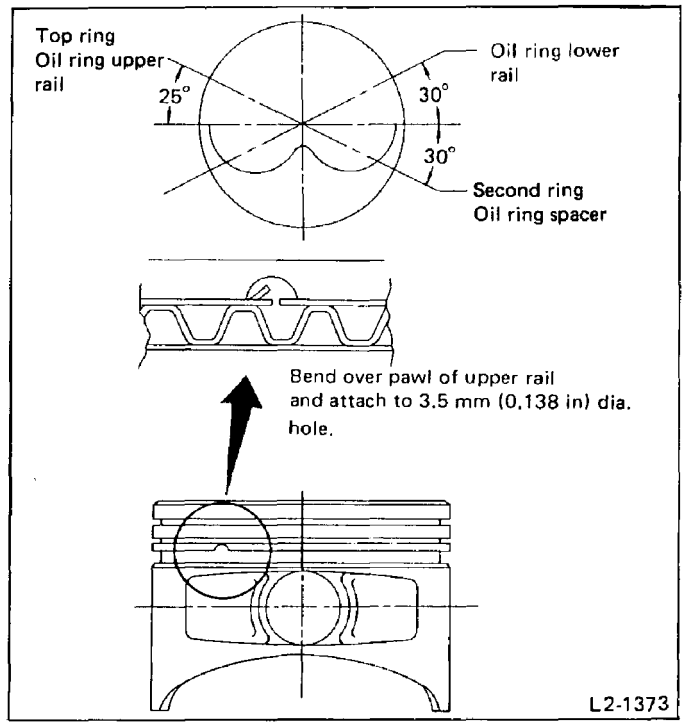

Fig. 81

9) Install pistons in cylinder as follows.
(1) Apply oil to the circumference of piston and the inner surface of cylinder.
(2) With the #3 and #4 cylinders facing downwards, turn crankshaft until the #1 and #2 connecting rod comes to the bottom dead center. Then insert the #1 and #2 piston into cylinder by using PISTON GUIDE (398744300).

If any of the pistons are reused, be sure to direct them in the same way as before they were disassembled.

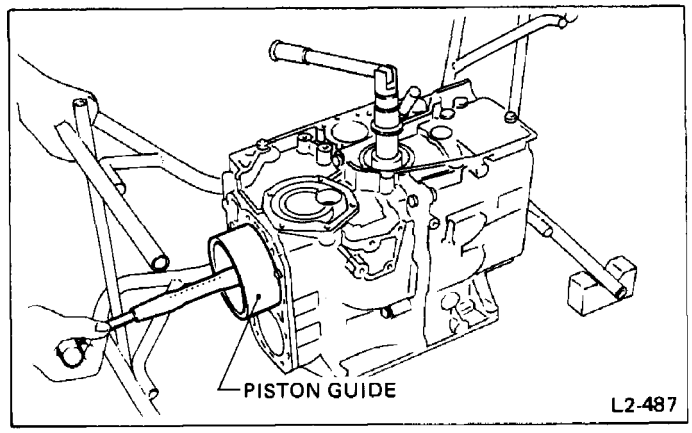

Fig. 82

(3) Install piston pin and circlip through the service hole after aligning the service hole, piston pin hole, and connecting rod small end with PISTON PIN GUIDE (399284300).

Circlip must be installed in correct direction with its end facing out.

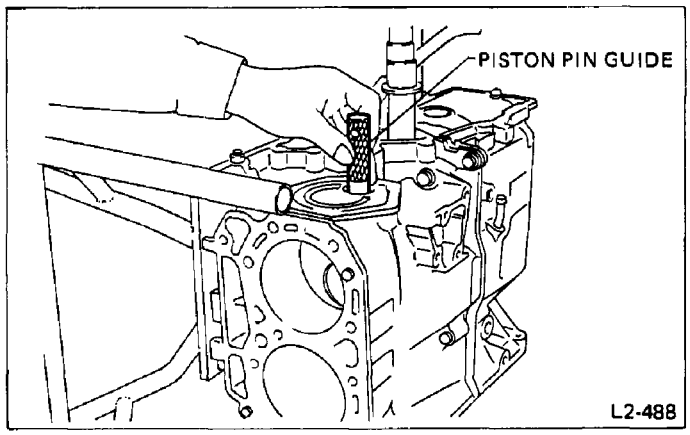

Fig. 83

(4) With #1 and #2 cylinders facing down, turn crankshaft until #3 and #4 piston connecting rods are at the bottom dead center position. Similarly to #1 and #2 cylinders, install pistons, piston pins, and circlips to #3 and #4 connecting rods.

Install crankshaft bolt to turn crankshaft.

(5) Turn crankshaft, and check whether pistons are assembled correctly.

10) Apply fluid packing (Fuji-bond C, or equivalent) to plugs, and tighten it with aluminium gasket placed in between.

Tightening torque:
62 –76 N·m (6.3 – 7.7 kg-m, 46 – 56 ft-lb)

11) Install rear oil seal to cylinder block using INSTALLER (499587000).

Coat oil seal lips with grease.
Coat the outside surface of oil seal with engine oil.

Max. allowable out-of-squareness of oil seal:
0.3 mm (0.012 in)

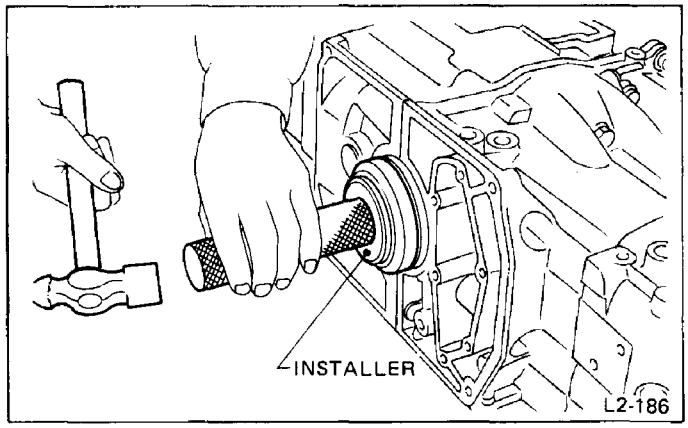

Fig. 84

12) Install oil separator cover with gasket placed in between.

Tightening torque:
4.4 – 5.4 N·m (0.45 – 0.55 kg-m, 3.3 – 4.0 ft-lb)

13) Install front oil seal to cylinder block using OIL SEAL INSTALLER (499567000) or (499567100).

Coat the outside surface of oil seal with engine oil, and oil seal lip with grease. Force-fit oil seal squarely into position.

Max. allowable out-of-squareness of oil seal:
0.2 mm (0.008 in)

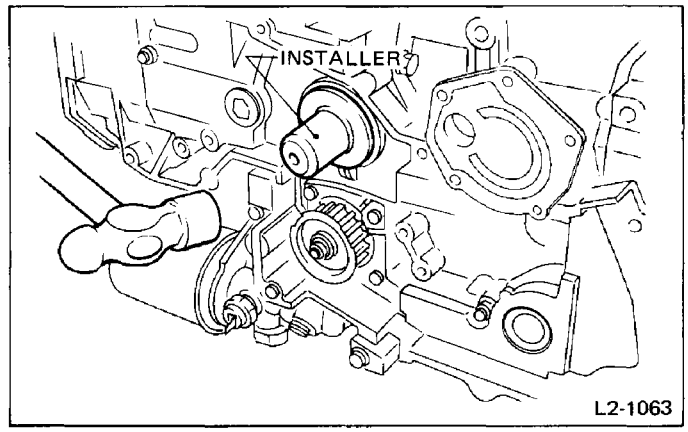

Fig. 85

INSTALLATION

1) Secure oil strainer to cylinder block with oil strainer stays.
2) Install oil pan.

Tightening torque:
4.4 – 5.4 N·m (0.45 – 0.55 kg-m, 3.3 – 4.0 ft-lb)

3) Install cylinder heads to cylinder blocks with gaskets placed between.
When tightening bolts, apply oil to the threads and tighten them in two or three successive steps until the final tightening is at the specified torque.
In each step, tighten them in the specified sequence.

1st step:
29 N·m (3.0 kg-m, 22 ft-lb)
2nd step:
59 N·m (6.0 kg-m, 43 ft-lb)
3rd (final) step:
64 N·m (6.5 kg-m, 47 ft-lb)

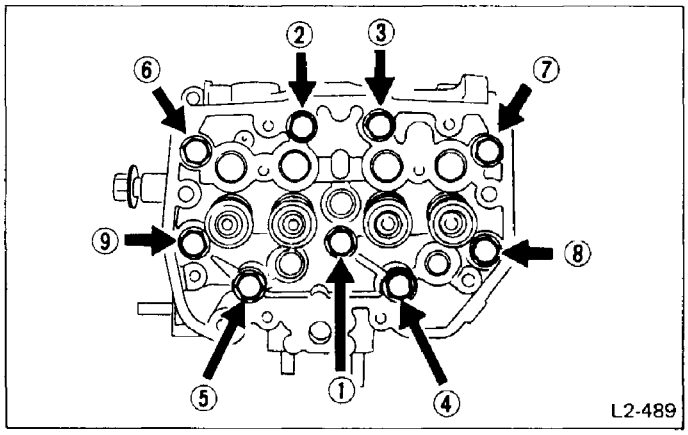

Fig. 86

4) Install flywheel housing with housing cover and pitching stopper bracket.

Tightening torque:
34 – 40 N·m (3.5 – 4.1 kg-m, 25 – 30 ft-lb)

5) Install flywheel to crankshaft using FLYWHEEL STOPPER (498277000) for locking crankshaft. [Manual transmission model]

Tightening torque:
69 – 75 N·m (7.0 – 7.6 kg-m, 51 – 55 ft-lb)

6) Install drive plate and reinforcement using DRIVE PLATE STOPPER (498497000) for locking crankshaft. [Automatic transmission model]

Tightening torque:
69 – 75 N·m (7.0 – 7.6 kg-m, 51 – 55 ft-lb)

7) Position the clutch cover so that the "●" marks on the flywheel and clutch cover are spaced 120° or more.
Install clutch disc and clutch cover with bolts and spring washers, aligning clutch disc with flywheel by inserting CLUTCH DISC GUIDE (499747000) into needle bearing fitted in flywheel. [Manual transmission model]

Tightening torque:
16 N·m (1.6 kg-m, 12 ft-lb)

8) Install seal to water pump, then install the water pump and timing plate to cylinder block with gasket placed between.

9) Install oil pump ASSY, proceeding as follows:
(1) Thoroughly remove excess fluid packing from rotor housing of cylinder block.
(2) Apply a small amount of fluid packing (Three-bond 1215, or equivalent) to the portion indicated by arrow in figure in cylinder block.
(3) Apply ample engine oil to rotor housing, then insert outer rotor into rotor housing by setting it as shown.
(4) Set oil pump pulley as shown, and install oil pump ASSY to cylinder block with gasket placed between. After installing, make sure pulley can be rotated smoothly.

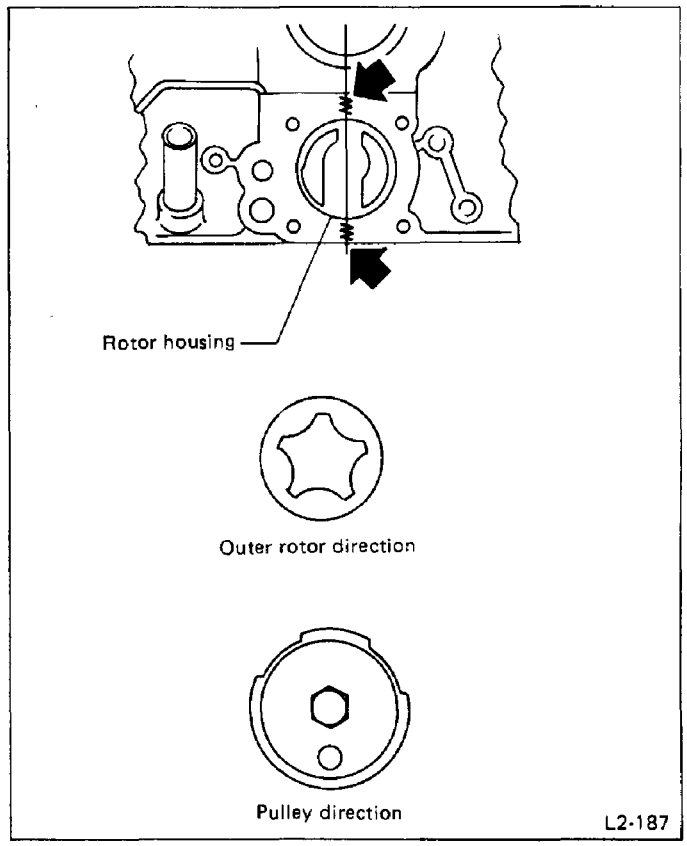

Fig. 87

(5) Install oil pressure switch or oil pressure gauge to oil pump ASSY. Loosen oil pressure gauge lead clamping screw and route the lead on the side of #1 and #3 cylinders.

Tightening torque:
22 – 27 N·m (2.7 – 2.8 kg-m, 16 – 20 ft-lb)

10) Insert valve lash adjusters into cylinder head.

Be sure to insert each valve lash adjuster to its original position.

11) Apply grease to spherical surface and sliding surface of each valve rocker, then secure valve rockers to the respective valve adjusters and valves.

Be sure to apply grease; otherwise, valve rocker will drop off.

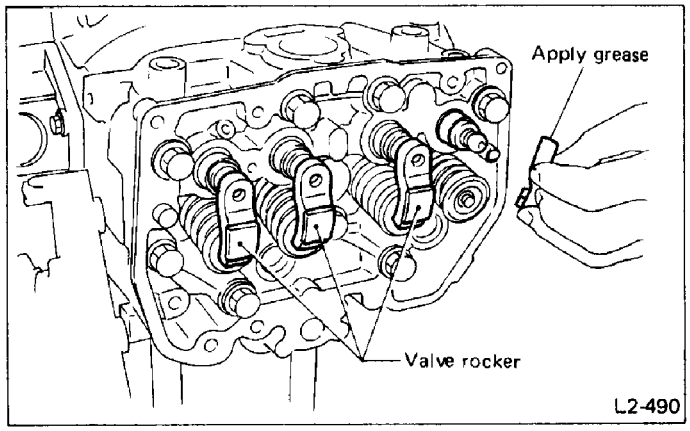

Fig. 88

12) Install O-ring to camshaft case by setting camshaft so that camshaft straight pin is oriented as shown.

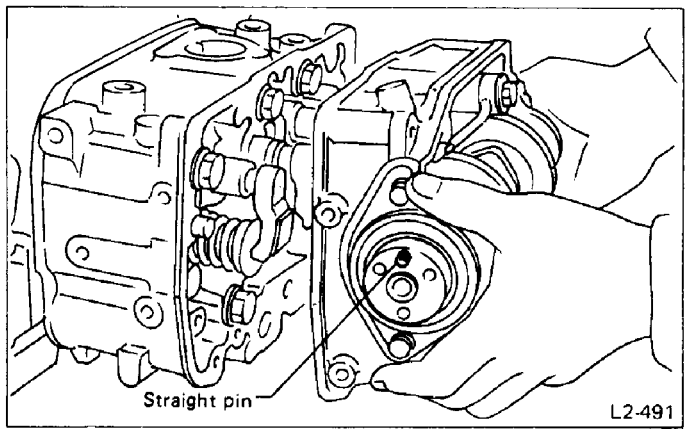

Fig. 89

13) Apply fluid packing (Three-bond 1215, or equivalent) to groove of each camshaft case, then install to cylinder head.

After installing, abundantly apply engine oil to sliding surfaces of cam and valve rocker.

Tightening torque:
17.2 – 20.1 N·m (1.75 – 2.05 kg-m, 12.7 – 14.8 ft-lb)

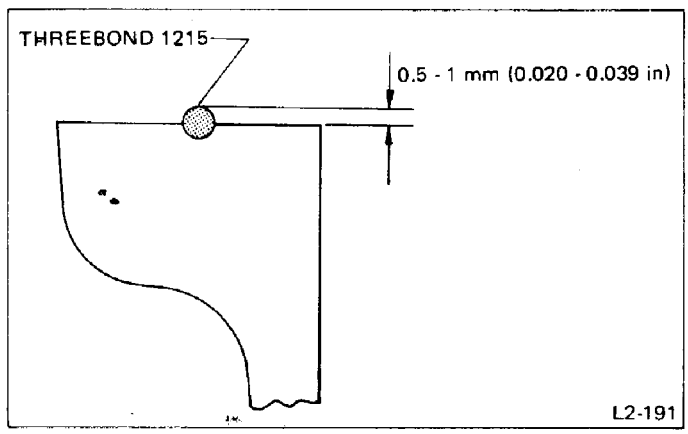

Fig. 90

14) Attach gaskets to valve rocker covers, and install the covers to camshaft cases with rocker cover washers and bolts.

Be extremely careful not to cause oil to leak from mating faces of valve rocker cover and camshaft case.

Tightening torque:
4.4 – 5.4 N·m (0.45 – 0.55 kg-m, 3.3 – 4.0 ft-lb)

15) Install timing belt, belt cover and related parts. (Refer to "Timing Belt and Belt Cover".)
16) Install crank pulley to crankshaft using FLYWHEEL STOPPER (498277000) [manual transmission model] or DRIVE PLATE STOPPER (498497000) [automatic transmission model] to lock crankshaft.

Tightening torque:
89 – 107 N·m (9.1 – 10.9 kg-m, 66 – 79 ft-lb)

17) Install water pump pulley and pulley cover to water pump ASSY, and tighten bolts temporarily.
18) Install oil level gauge and gauge guide. Apply engine oil to O-ring beforehand.
19) Install oil filler duct and bracket.
20) Install water by-pass pipe, hose, and water pipe. Apply coolant to O-rings beforehand.
21) Install air bleed hose.
22) Install alternator bracket, proceeding as follows. [All except air conditioner model]
(1) Assemble bracket Ⓐ and bracket Ⓑ temporarily with bolt Ⓒ so that these two parts contact each other.
(2) Install assembled brackets Ⓐ and Ⓑ to engine, and hand-tighten bolts Ⓔ and Ⓓ.
(3) Tighten bolt Ⓓ to the specified torque, then tighten bolt Ⓔ to the specified torque.
(4) Tighten bolt Ⓒ to the specified torque.

Tightening torque:
Bolt Ⓒ
16 – 22 N·m (1.6 – 2.2 kg-m, 12 – 16 ft-lb)
Bolts Ⓓ and Ⓔ
36 – 42 N·m (3.7 – 4.3 kg-m, 27 – 31 ft-lb)

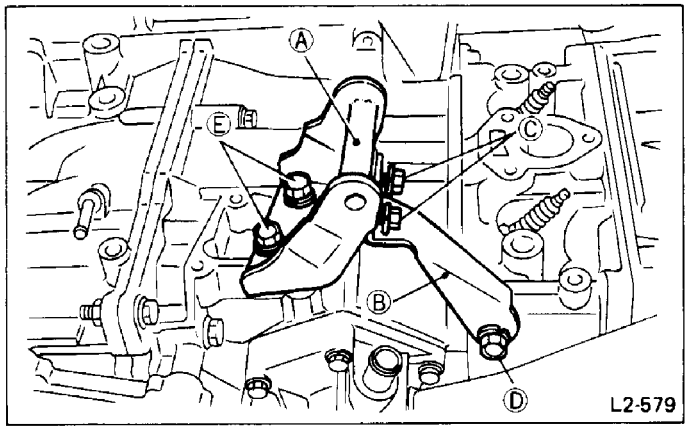

Fig. 91

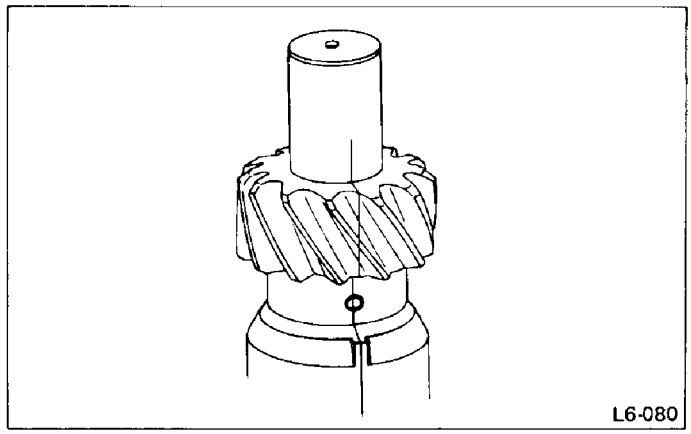

Fig. 93

23) Install power steering oil pump bracket to cylinder block. [Power steering model]
24) Install harnesses.
25) Install hoses and tubes.
26) Install alternator to bracket, and tighten bolts temporarily. [Except air conditioner model]
27) Install distributor, proceeding as follows:
(1) Bring #1 cylinder piston to its top dead center on compression stroke. Set camshaft sprocket to the position shown in Figure.

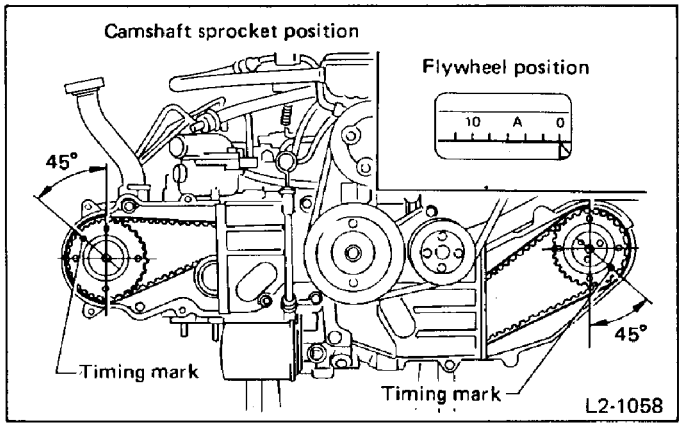

Fig. 92

(2) Align distributor housing match mark with pinion gear match mark to set #1 cylinder at igniting position.
(3) Install distributor to camshaft case.
(4) Connect lead wires.
(5) Install plug cord and high-tension cord.
28) Install right and left belt covers.
29) Remove ENGINE STAND (499817100).
30) Install air duct and boots.

After completing engine ASSY and mounting engine on car, be sure to retighten cylinder head bolts.
(Refer to "2-2 ON-CAR SERVICES".)

Crankshaft and Piston

DISASSEMBLY

PISTON

1) Remove the piston rings using the piston ring expander.

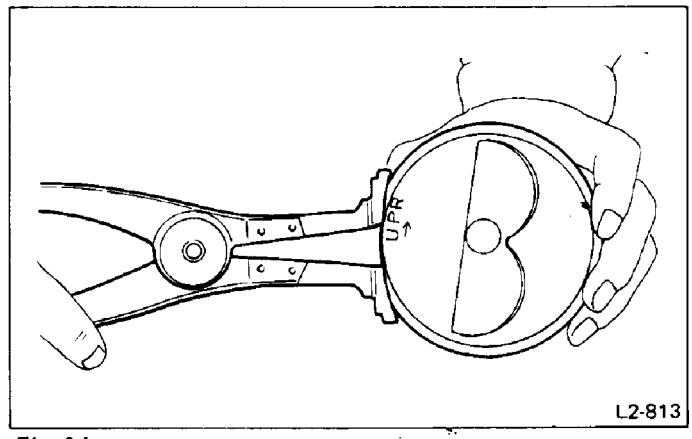

Fig. 94

2) Remove the oil ring by hand.

Arrange the removed piston rings in good order to prevent confusion.

CONNECTING ROD

Remove connecting rod cap mounting nuts, and take out connecting rod from crankshaft.

Arrange removed connecting rod and connecting rod cap in good order to prevent confusion.

INSPECTION

PISTON AND PISTON PIN

1) Check pistons and piston pins for damage, cracks, and wear and the piston ring grooves for wear and damage. Replace if defective.
2) Measure the piston-to-cylinder clearance at each cylinder as instructed in CYLINDER AND PISTON. If any of the clearances is not to specification, replace the piston or bore the cylinder to use an oversize piston.
3) Make sure that piston pin can be inserted into the piston pin hole with a thumb at 20°C (68°F). Replace if defective.

Specifications for piston and piston pin:
Standard outer diameter of piston pin
20.994 – 21.000 mm (0.8265 – 0.8268 in)
Standard inner diameter of piston pin hole
20.999 – 21.009 mm (0.8267 – 0.8271 in)
Standard clearance between piston pin and hole in piston
0.001 – 0.015 mm (0.00004 – 0.00059 in)
Standard clearance between piston pin and hole in connecting rod
0 – 0.022 mm (0 – 0.0009 in)

PISTON RING

1) If piston ring is broken, damaged, or worn, or if its tension is insufficient, or when the piston is replaced, replace piston ring with a new one of the same size as the piston.

"R" or "N" is marked on the end of the top and second rings. When installing the rings to the piston, face this mark upward.

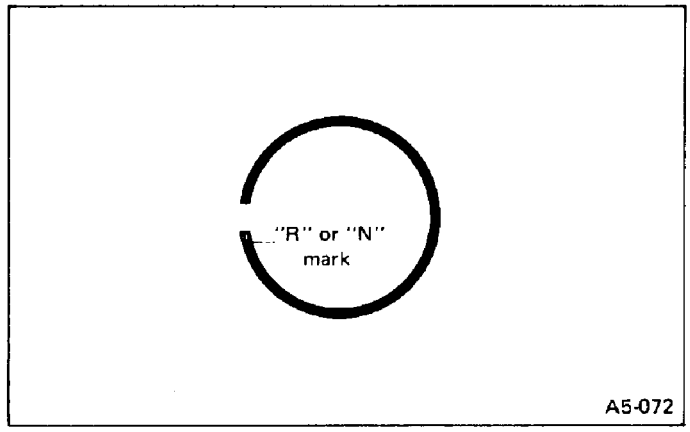

Fig. 95

The oil ring is a combined ring consisting of two rails and a spacer in between. When installing, be careful not to make misassembly.

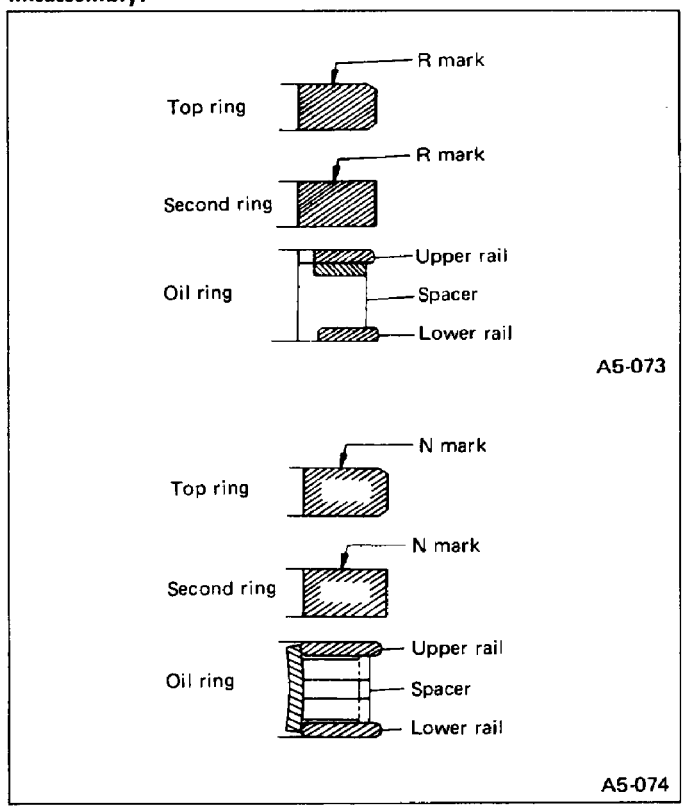

Fig. 96

2) Squarely place piston ring in cylinder and measure the piston ring gap with a thickness gauge.

		Standard	Limit
Piston ring gap	Top ring	0.20 – 0.35 mm (0.0079 – 0.0138 in)	1.5 mm (0.059 in)
	Second ring	0.20 – 0.35 mm (0.0079 – 0.0138 in)	1.5 mm (0.059 in)
	Oil ring rail	0.3 – 0.90 mm (0.012 – 0.0354 in)	2.0 mm (0.079 in)

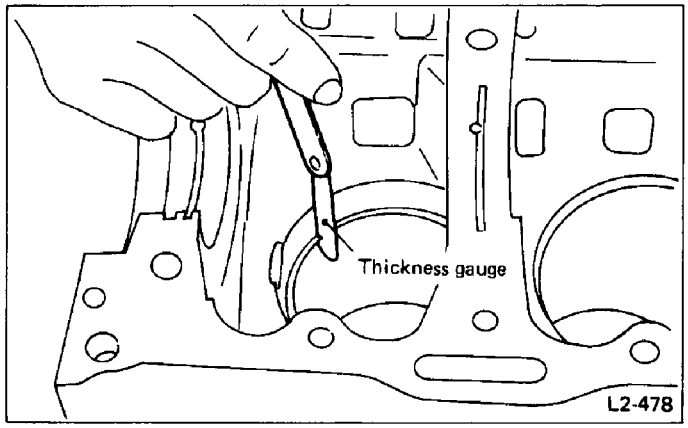

Fig. 97

3) Measure the clearance between piston ring and piston ring groove with a thickness gauge.

Before measuring the clearance, clean the piston ring groove and piston ring.

		Standard	Limit
Clearance between piston ring and piston ring groove	Top ring	0.04 – 0.08 mm (0.0016 – 0.0031 in)	0.15 mm (0.0059 in)
	Second ring	0.03 – 0.07 mm (0.0012 – 0.0028 in)	0.15 mm (0.0059 in)
	Oil ring	0	0

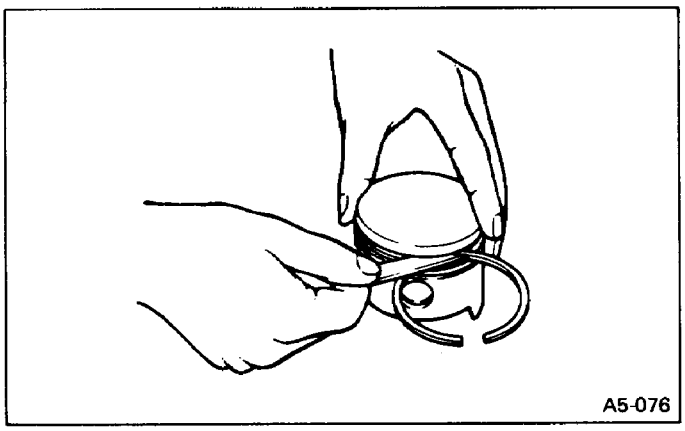

Fig. 98

CONNECTING ROD

1) Replace connecting rod, if the large or small end thrust surface is damaged.
2) Check for bend or twist using a connecting rod aligner. Replace connecting rod if the bend or twist exceeds the limit.

Limit of bend or twist per 100 mm (3.94 in) in length:
0.10 mm (0.0039 in)

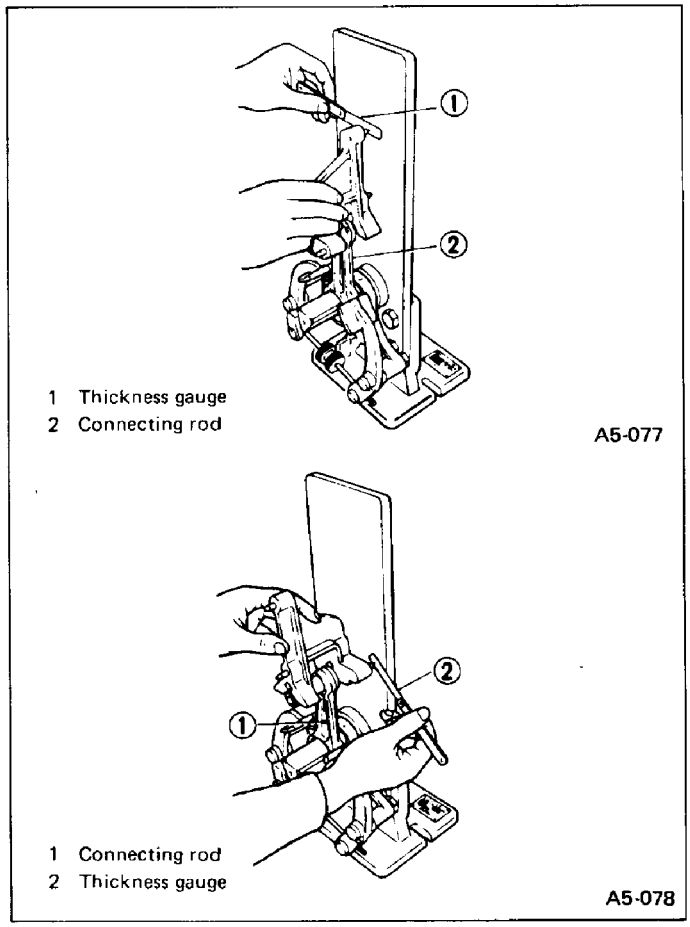

Fig. 99

3) Install connecting rod fitted with bearing to crankshaft and measure the side clearance (thrust clearance). Replace connecting rod if the side clearance exceeds the specified limit.

Connecting rod side clearance:
Standard
0.070 – 0.330 mm (0.0028 – 0.0130 in)
Limit
0.4 mm (0.016 in)

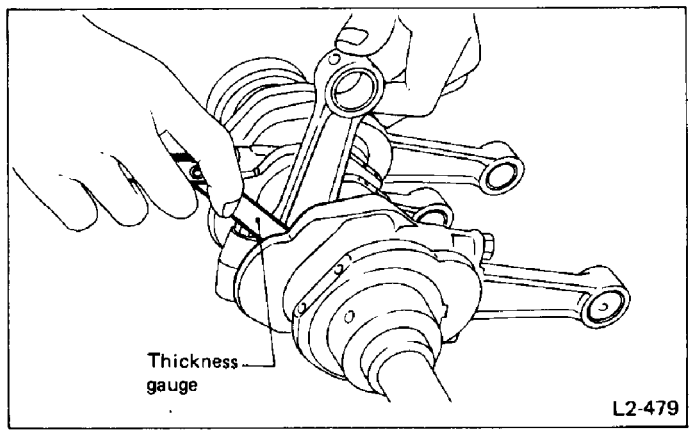

Fig. 100

4) Inspect connecting rod bearing for scar, peeling, seizure, melting, wear, etc.
5) Measure the oil clearance on individual connecting rod bearings by means of plastigauge according to the following procedure.
(1) Wipe off oil, dust, etc. on the surfaces to be measured.
(2) Cut the plastigauge to the width of the bearing, place it on the crankpin parallel with the crankshaft axis, and install connecting rod. Tighten connecting rod nuts to 41 N·m (4.2 kg-m, 30 ft-lb).

During this measurement, do not allow relative movement between the crankpin and connecting rod.

(3) Remove connecting rod and measure the width of the plastigauge with the scale printed on the plastigauge case.
If any oil clearance is not within specification, replace the defective bearing with a new one of standard size or undersize as necessary, and replace or recondition the crankshaft as necessary. (See the table below.)

Connecting rod oil clearance:
Standard
0.010 – 0.054 mm (0.0004 – 0.0021 in)
Limit
0.10 mm (0.0039 in)

Connecting rod bearing	
Bearing size	Thickness at center of bearing
Standard	1.485 – 1.490 mm (0.0585 – 0.0587 in)
0.03 mm (0.0012 in) undersize	1.500 – 1.505 mm (0.0591 – 0.0593 in)
0.05 mm (0.0020 in) undersize	1.510 – 1.515 mm (0.0594 – 0.0596 in)
0.25 mm (0.0098 in) undersize	1.610 – 1.615 mm (0.0634 – 0.0636 in)

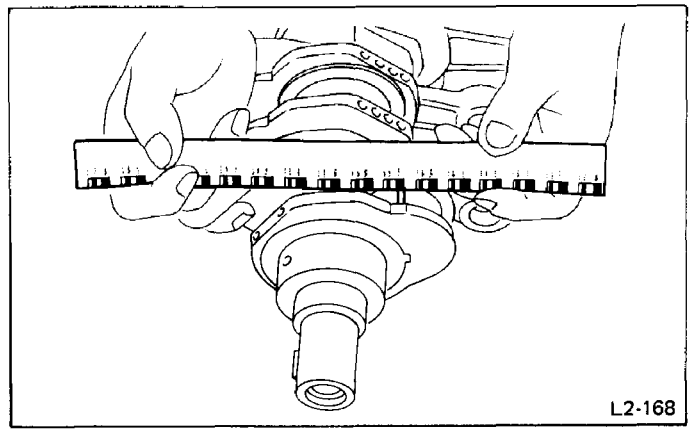

Fig. 101

6) Inspect bushing at connecting rod small end, and replace if worn or damaged. Also measure the piston pin clearance at the connecting rod small end.

Standard clearance between piston pin and bushing in connecting rod:
0 – 0.022 mm (0 – 0.0009 in)

Replacement procedure is as follows.
(1) Remove bushing from connecting rod with REMOVER & REPLACER (499037000) and press.
(2) Press bushing with REMOVER & REPLACER (499037000) after applying oil on the periphery of bushing.
(3) Make two 3 mm (0.12 in) holes in bushing.
Ream the inside of bushing.

Bushing bore:
21.000 – 21.016 mm (0.8268 – 0.8274 in)

(4) After completion of reaming, clean bushing to remove chips.

CRANKSHAFT AND CRANKSHAFT BEARING

1) Clean crankshaft completely and check for cracks by means of red check etc., and replace if defective.
2) Measure the crankshaft bend, and correct or replace if it exceeds the limit.

When measuring, place both the front and rear journals on blocks located on a surface plate, and apply a dial gauge to the center journal.

Crankshaft bend limit:
0.035 mm (0.0014 in)

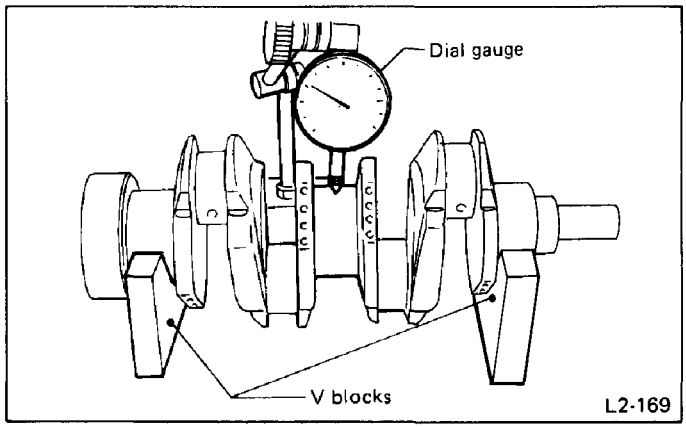

Fig. 102

3) Inspect the crank journal and crankpin for wear. If not to specifications, replace bearing with an undersize one, and replace or recondition crankshaft as necessary. When grinding crank journal or crankpin, finish them to the specified dimensions according to the undersize bearing to be used.

Crankpin and crank journal:
Out-of-roundness
0.03 mm (0.0012 in) or less
Taper limit
0.07 mm (0.0028 in)
Grinding limit
0.25 mm (0.0098 in)

	Crankpin O.D.	Crank journal O.D.		
		Front	Center	Rear
Standard	44.995 – 45.010 mm (1.7715 – 1.7720 in)	54.957 – 54.972 mm (2.1637 – 2.1642 in)	54.954 – 54.970 mm (2.1635 – 2.1642 in)	54.955 – 54.970 mm (2.1636 – 2.1642 in)
0.03 mm (0.0012 in) undersize	44.965 – 44.980 mm (1.7703 – 1.7709 in)	54.927 – 54.942 mm (2.1625 – 2.1631 in)	54.924 – 54.940 mm (2.1624 – 2.1630 in)	54.925 – 54.940 mm (2.1624 – 2.1630 in)
0.05 mm (0.0020 in) undersize	44.945 – 44.960 mm (1.7695 – 1.7701 in)	54.907 – 54.922 mm (2.1617 – 2.1623 in)	54.904 – 54.920 mm (2.1616 – 2.1622 in)	54.905 – 54.920 mm (2.1616 – 2.1622 in)
0.25 mm (0.0098 in) undersize	44.745 – 44.760 mm (1.7616 – 1.7622 in)	54.707 – 54.722 mm (2.1538 – 2.1544 in)	54.704 – 54.720 mm (2.1537 – 2.1543 in)	54.705 – 54.720 mm (2.1537 – 2.1543 in)

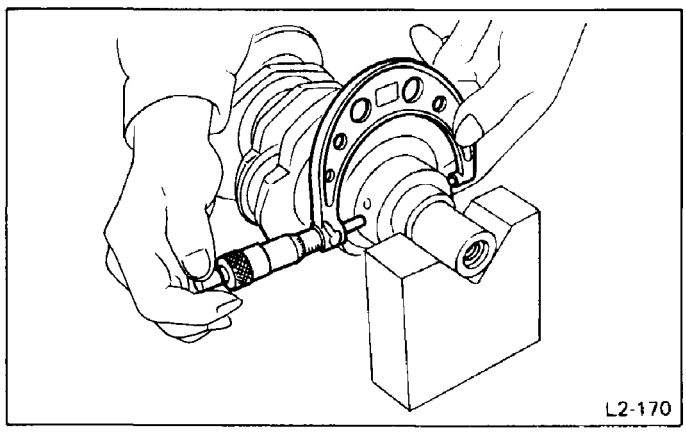

Fig. 103

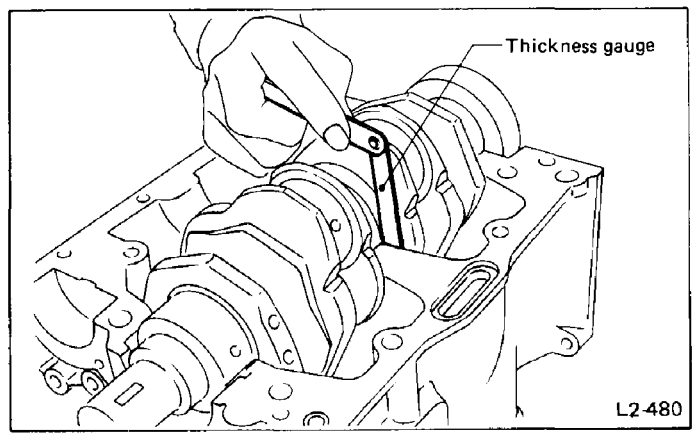

Fig. 104

4) Measure the thrust clearance of crankshaft at center bearing. If the clearance exceeds the limit, replace bearing.

Crankshaft thrust clearance
Standard
0.010 – 0.095 mm (0.0004 – 0.0037 in)
Limit
0.3 mm (0.0118 in)

5) Inspect individual crankshaft bearings for signs of flaking, seizure, melting, and wear.

6) Measure the oil clearance on each crankshaft bearing by means of plastigauge as follows:

(1) Wipe off oil, dust, etc. on the surfaces to be measured.

(2) Install bearings in crankcase and set crankshaft in position.

(3) Cut the plastigauge to the bearing width and place it on journal parallel with the crankshaft axis. Be careful not to put it on the oil hole or groove. Bring together the crankcase halves and tighten bolts to the specified torque.

During the work, the crankshaft must not be turned nor the crankcase inverted.

Torque:
39 – 47 N·m (4.0 – 4.8 kg-m, 29 – 35 ft-lb)

(4) Remove all bolts and separate crankcase. Measure the plastigauge width with the scale printed on the plastigauge case.

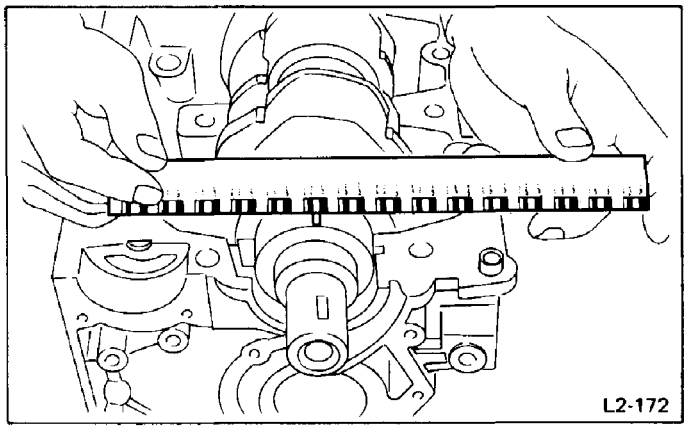

Fig. 105

(5) If the measurement is not within the specification, replace defective bearing with an undersize one, and replace or recondition crankshaft as necessary.

Crankshaft oil clearance		
Standard	Center	0.008 – 0.027 mm (0.0003 – 0.0011 in)
	Front & Rear	0.003 – 0.036 mm (0.0001 – 0.0014 in)
Limit	Center	0.045 mm (0.0018 in)
	Front & Rear	0.055 mm (0.0022 in)

Dimensions of bearing		
Crankshaft bearing size	Thickness of bearing at center	
	Front & Rear	Center
Standard	2.015 – 2.019 mm (0.0793 – 0.0795 in)	2.019 – 2.022 mm (0.0795 – 0.0796 in)
0.03 mm (0.0012 in) undersize	2.030 – 2.034 mm (0.0799 – 0.0801 in)	2.034 – 2.037 mm (0.0801 – 0.0802 in)
0.05 mm (0.0020 in) undersize	2.040 – 2.044 mm (0.0803 – 0.0805 in)	2.044 – 2.047 mm (0.0805 – 0.0806 in)
0.25 mm (0.0098 in) undersize	2.140 – 2.144 mm (0.0843 – 0.0844 in)	2.144 – 2.147 mm (0.0844 – 0.0845 in)

ASSEMBLY

CRANKSHAFT

1) Install connecting rod bearings on connecting rods and connecting rod caps.

Apply oil to the surfaces of the connecting rod bearings.

2) Install connecting rods and connecting rod caps on crankshaft with connecting rod bolts and nuts.

Torque (Connecting rod nut):
39 – 42 N·m (4.0 – 4.3 kg-m, 29 – 31 ft-lb)
with oil on threads

a. Position each connecting rod with the side marked ❼ facing forward.
b. Each connecting rod has its own mating cap. Make sure that they are assembled correctly by checking their matching number.
c. When tightening the connecting rod nuts, apply oil on the threads.

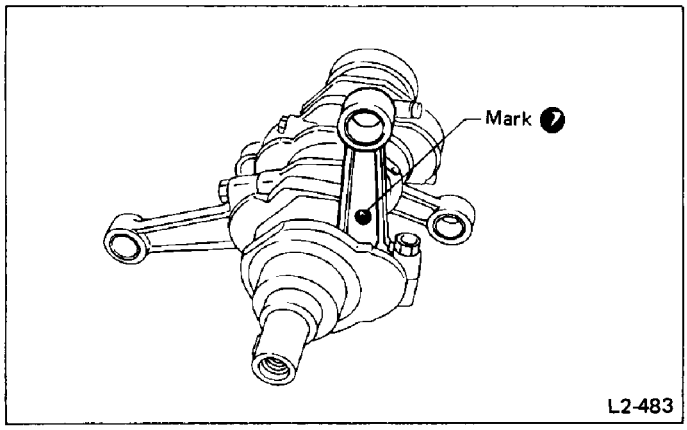

Fig. 106

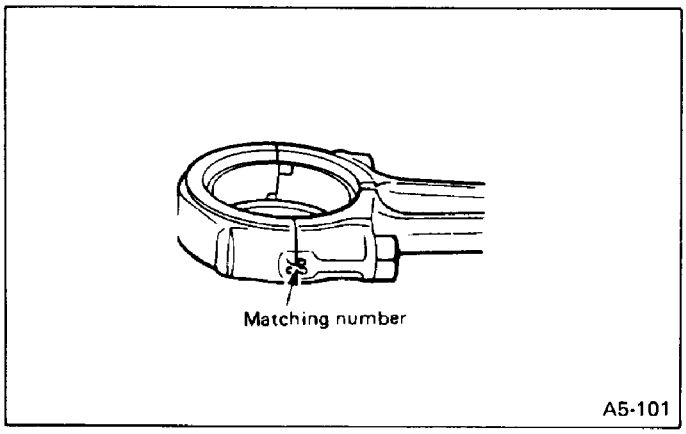

Fig. 107

PISTON

1) Install piston rings on pistons as follows.
Install oil ring spacer, upper rail and lower rail in this order by hand. Then install second ring and top ring with a piston ring expander.

2) Position the gaps of the piston rings and oil ring as shown in the figure.

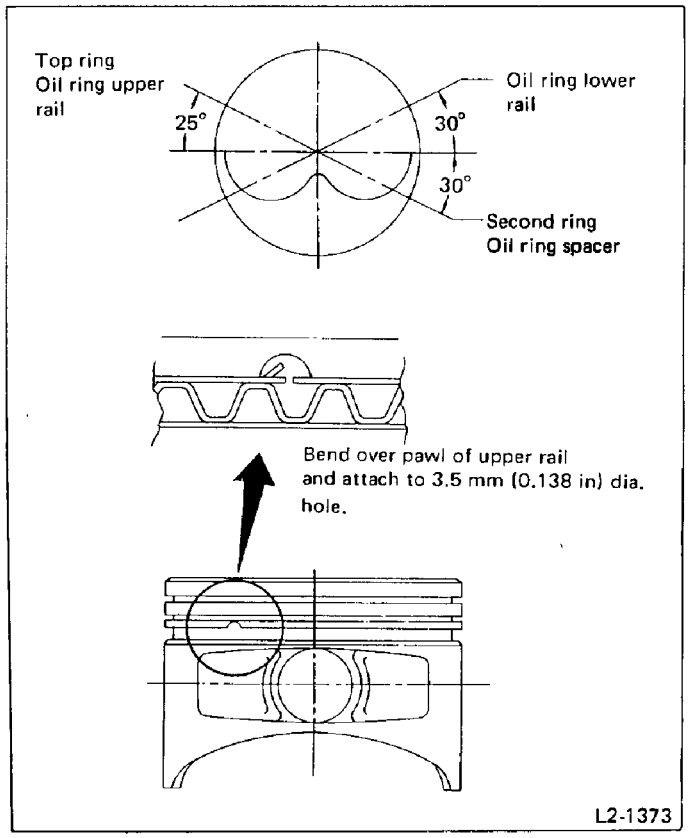

Fig. 108

3) Install circlip to piston.
The circlip must be fitted to the end that faces inside of crankcase when piston is inserted.

Circlip must be installed in correct direction with its end facing out.

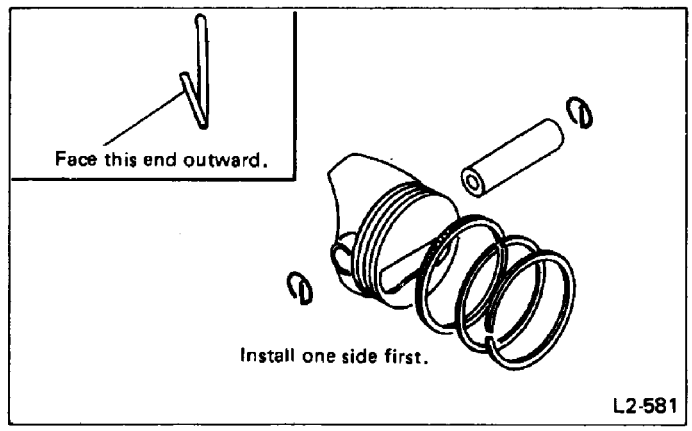

Fig. 109

TROUBLESHOOTING

Engine Trouble in General

Symbols shown in the chart refer to the possibility of reason for the trouble in order ("Very often" to "Rarely")
◎ – Very often
○ – Sometimes
△ – Rarely

No.	TROUBLE	
1	Engine will not start.	Starter does not turn.
2		Initial combustion does not occur.
3		Initial combustion occurs.
4		Engine stalls after initial combustion.
5	Rough idle and engine stall.	
6	Low output, hesitation and poor acceleration.	
7	Surging.	
8	Engine does not return to idle.	
9	Dieseling (Run-on).	
10	Afterburning in exhaust system.	
11	Knocking.	
12	Excessive engine oil consumption.	
13	Excessive fuel consumption.	

TROUBLE No.													POSSIBLE CAUSE
1	2	3	4	5	6	7	8	9	10	11	12	13	
○ △ △ ○	△												STARTER • Defective battery-to-starter harness. • Defective starter switch. • Defective inhibitor switch. • Defective starter.
◎ ◎ ○													BATTERY • Poor terminal connection. • Run-down battery. • Defective charging system.
	◎	◎	◎	◎	◎	◎	◎	◎	◎	◎		◎	MPFI SYSTEM (See Chap. 2-7.)
	○ ○ ○ ○ ○ ○ ○ ○	○ ◎ ○ ○ ○	○	◎ ○ △ △ △ △ ○ ○	◎ ○ ◎ ○ △ ○ ○ ○	◎ ○ ○ ○ △ △ ○ ◎	◎ ○ △	◎	◎ △ ◎ ○ ○	◎ ○ ○		◎ △	IGNITION SYSTEM • Incorrect ignition timing. • Disconnection of spark plug cord. • Defective distributor. • Defective ignition coil. • Defective cord or wiring. • Leakage of spark plug cord. • Defective spark plug. • Incorrect cam timing.
1	2	3	4	5	6	7	8	9	10	11	12	13	

TROUBLE No.													POSSIBLE CAUSE
1	2	3	4	5	6	7	8	9	10	11	12	13	
													INTAKE SYSTEM
		○	○	◎	○	○	◎	○	○			◎	• Improper idle adjustment.
			○	◎	◎	◎			△	◎			• Loosened or cracked intake boot.
			○	◎	◎	◎			△	◎			• Loosened or cracked intake duct.
			△	◎	◎	◎			△	◎	◎		• Loosened or cracked blow-by hose.
			△	◎	○	◎	◎		○	◎			• Loosened or cracked vacuum hose.
		○	○	○	○	○				◎			• Defective intake manifold gasket.
		○	○	○	○	○				◎			• Defective throttle body gasket.
				△	○	○			○	○	○		• Defective PCV valve.
				○	○	○			△	○	△		• Loosened oil filler cap.
			△	△	◎	○				○		◎	• Dirty air cleaner element.
													FUEL LINE
	◎	△		△	○	○							• Defective fuel pump.
		△	△	△	○	○							• Clogged fuel line.
	○	○	○	○	△	△							• Lack of or insufficient fuel.
													BELT
	○	○	○										• Defective.
	○	○	○	△	○	○			○	○		○	• Defective timing.
													FRICTION
△													• Seizure of crankshaft and connecting-rod bearing.
△													• Seized camshaft.
△													• Seized or stuck piston and cylinder.
													COMPRESSION
	△	△	△	○	○	○			○	△		○	• Incorrect valve clearance.
	△	△	△	○	○	△			△			△	• Loosened spark plugs or defective gasket.
	△	△	△	○	○	△			△			△	• Loosened cylinder head nuts or defective gasket.
	△	△	△	○	○	△			○			○	• Improper valve seating.
	△	△	△	△	△	△			△		◎	△	• Defective valve stem.
	○	○	○	○	○	△			△			△	• Worn or broken valve spring.
	△	△	△	○	△	△			△		◎	○	• Worn or stuck piston rings, cylinder and piston.
	○	○	○	◎	◎	◎			◎	○		○	• Incorrect valve timing.
	○	○	○	○	○	○							• Improper engine oil (low viscosity).
													LUBRICATION SYSTEM
				○	○				△			△	• Incorrect oil pressure.
											○		• Loosened oil pump attaching bolts and defective gasket.
											○		• Defective oil filter seal.
											○		• Defective crankshaft oil seal.
				△							○		• Defective rocker cover gasket.
											○		• Loosened oil drain plug or defective gasket.
											○		• Loosened oil pan fitting bolts or defective oil pan.
1	2	3	4	5	6	7	8	9	10	11	12	13	

TROUBLE No.													POSSIBLE CAUSE
1	2	3	4	5	6	7	8	9	10	11	12	13	
													COOLING SYSTEM
				△	△	○		○		◎			• Overheating.
					△				△			△	• Over cooling.
													OTHERS
				◎	◎	△			△				• Malfunction of Evaporative Emission Control System. (See Chap. 2-1)
				○			◎						• Stuck or damaged throttle valve.
				△			○					○	• Dashpot out of adjustment.
				△			○	○				○	• Accelerator cable out of adjustment.
				○			○	○				○	• FICD out of adjustment.
				○			○						• Malfunction of FICD.
1	2	3	4	5	6	7	8	9	10	11	12	13	

Engine Noise

In case of 1800 cc OHC engine, valve lash adjuster may make clicking noise once engine starts. It is normal if clicking noise ceases after a few seconds.
If clicking noise continues after several seconds, check engine oil level and add oil if necessary. Then allow engine to idle for 10 to 20 minutes while maintaining engine speed at 1,500 to 2,000 rpm.

Type of sound	Condition	Possible cause
Regular clicking sound.	Sound increases as engine speed increases.	Valve mechanism is defective • Broken lash adjuster. • Worn valve rocker. • Worn camshaft. • Broken valve spring. • Worn valve lifter hole.
Heavy and dull metallic knock.	Oil pressure is low.	• Worn crankshaft main bearing. • Worn connecting rod bearing (big end).
	Oil pressure is normal.	• Loose flywheel mounting bolts. • Damaged engine mounting.
High-pitched metallic knock. (Engine knocking)	Sound is noticeable when accelerating with an overload.	• Ignition timing advanced. • Accumulation of carbon inside combustion chamber. • Wrong spark plug. • Improper gasoline.
Metallic knock when engine speed is medium (1,000 to 2,000 rpm).	Sound is reduced when spark plug in noisy cylinder is shortened out.	• Worn crankshaft main bearing. • Worn bearing at crankshaft end of connecting rod.
Knocking sound when engine is operating under idling speed and engine is warm.	Sound is reduced when spark plug in noisy cylinder is shortened out.	• Worn cylinder liner and piston ring. • Broken or stuck piston ring. • Worn piston pin and hole at piston end of connecting rod.
	Sound is not reduced if each spark plug is shortened out in turn.	• Unusually worn valve lifter. • Worn cam gear. • Worn camshaft journal bore in crankcase.
Squeaky sound.		• Insufficient alternator lubrication.
Rubbing sound.		• Defective alternator brush and rotor contact.

Type of sound	Condition	Possible cause
Gear scream when starting engine.		• Defective ignition starter switch. • Worn ring gear and starter pinion.
Sound like polishing glass with a dry cloth.		• Loose drive belt. • Defective water pump shaft.
Hissing sound.		• Loss of compression. • Air leakage in air intake system, hoses, connections or manifolds.
Timing belt noise.		• Loose timing belt. • Belt contacting case/adjacent part.
Distributor gear noise.		• Worn gear.

2700 cc Engine

MECHANISM AND FUNCTION

General

The SUBARU XT6 houses a horizontally-opposed 6-cylinder, 4-stroke cycle, liquid cooled OHC gasoline engine. This well-balanced engine, adopting a horizontally opposed piston arrangement, is made of an aluminium alloy, and is lightweight. This engine also adopts the OHC (Over-Head Camshaft) system, hydraulic lash adjuster, and multi point fuel injection system, attaining reliability as well as low fuel consumption, low vibration and powerful performance.

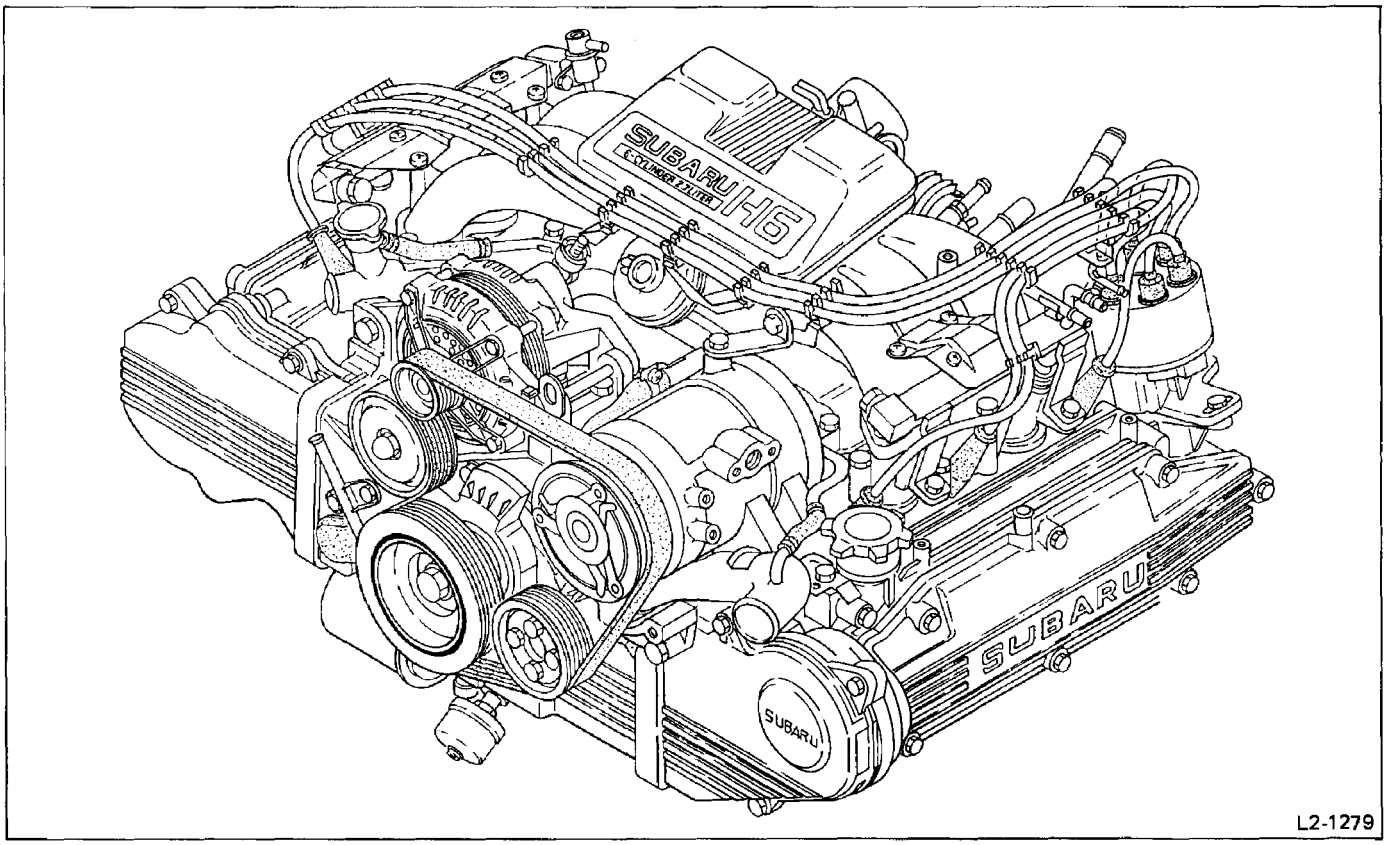

Fig. 110

CYLINDER BLOCK

1) The cylinder block, made of an aluminium alloy, is lightweight and provides good heat conduction, and is divided into two portions, left-side half and right-side half, due to the adoption of a horizontally opposed piston arrangement.

2) Four main journals are provided because of the 6-cylinder engine. These journals are lubricated through oil passages located in the right bank of the engine. The oil passage is enlarged to reduce oil resistance.

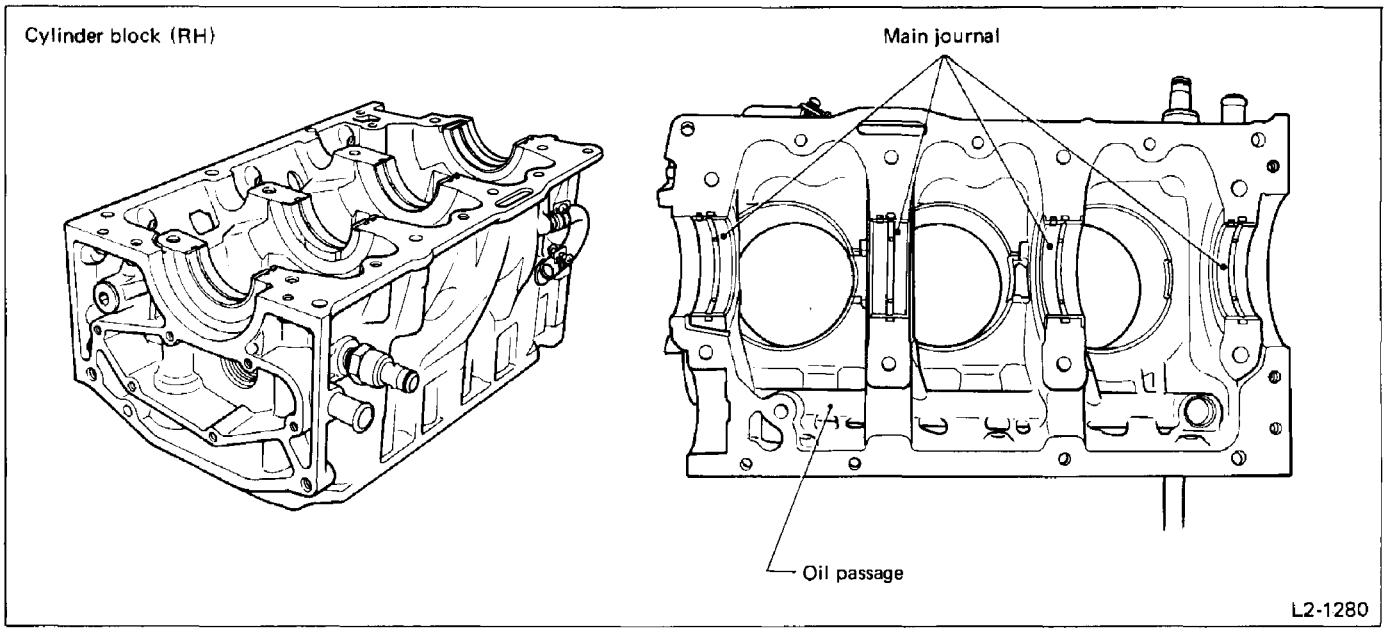

Fig. 111

CYLINDER HEAD

1) The cylinder head, made of an aluminium alloy, forms a part of the bath-tub type combustion chamber which features higher combustion efficiency.

2) The intake ports are independent types. The #1 and #3, and #2 and #4 exhaust ports are assembled types and the #5 and #6 exhaust ports are independent types.

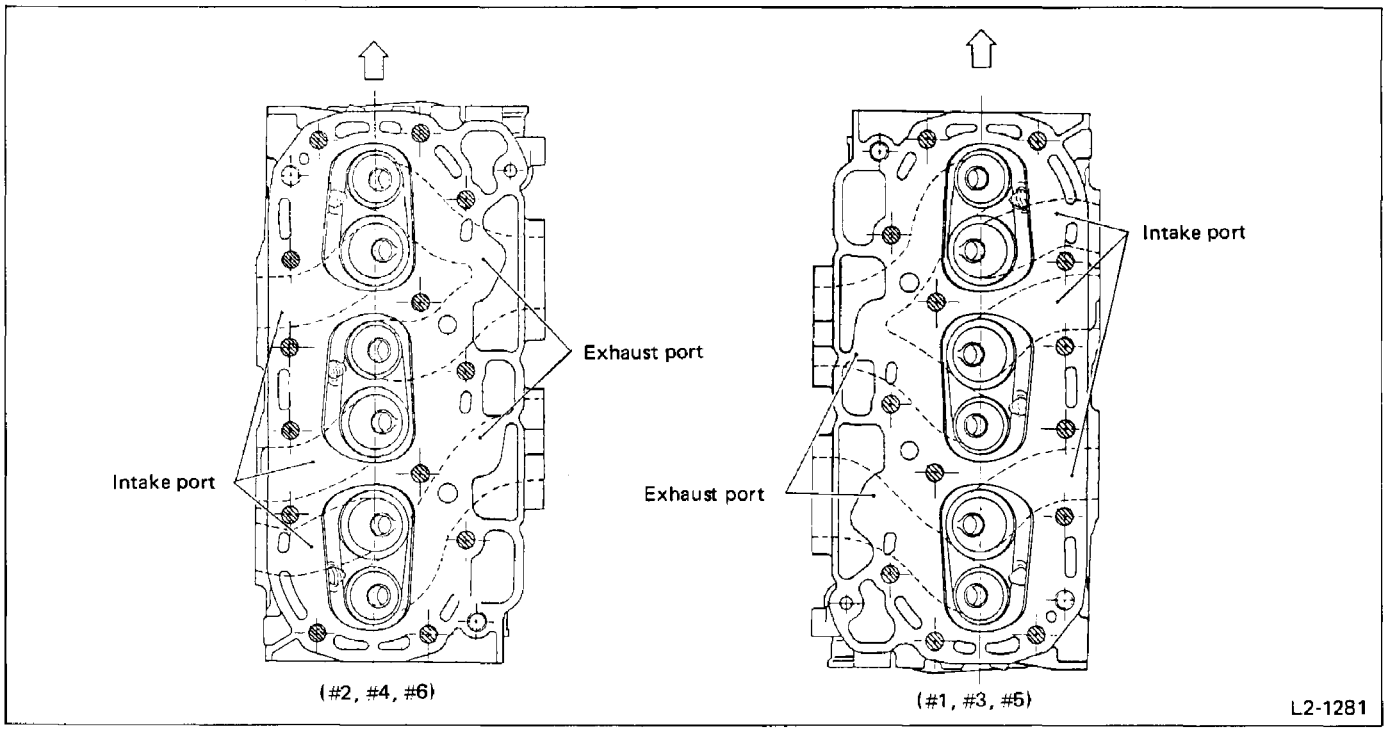

Fig. 112

HEAD GASKET

The head gasket is finished with a silicon-based, cotton-like treatment at the oil coolant passages to improve sealing.

CAMSHAFT CASE

1) The camshaft case holds the camshaft, and is an aluminium die-casting.
2) A rib connects the front journal and the mounting portion of the cam support to strengthen the camshaft case.
3) An oil filler duct and distributor are built into the left camshaft case.
4) An oil passage is provided in the camshaft case at the mounting portion of the cam support.
5) The camshaft case has a floating design which uses O-rings together with mounting bolts.

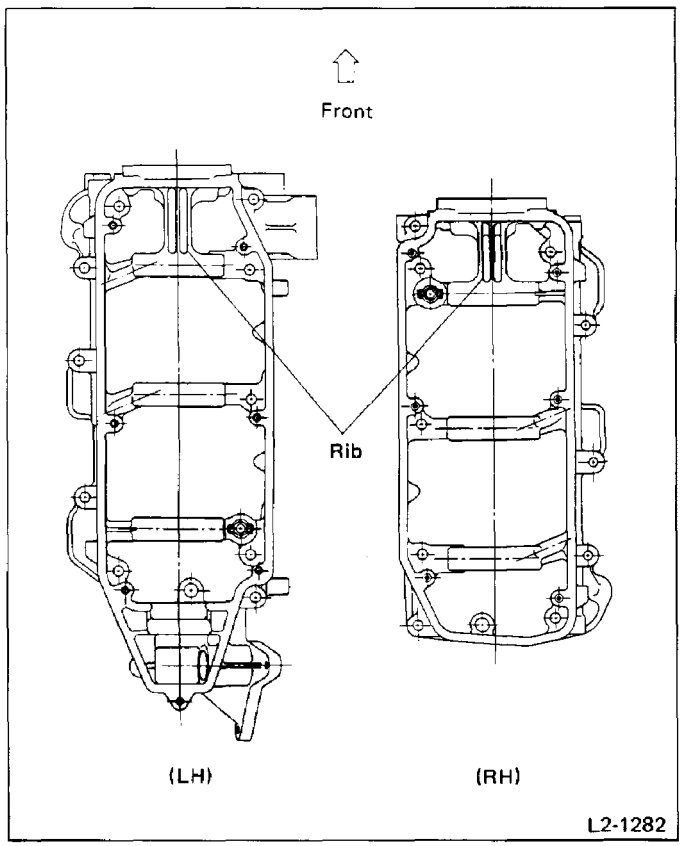

Fig. 113

ROCKER COVER

1) The rocker cover is made from thin, die-cast aluminium and is equipped with an oil separator.
2) This rocker cover adopts a float-supporting system with a rubber ring type gasket and an oil seal washer to reduce the noise level.

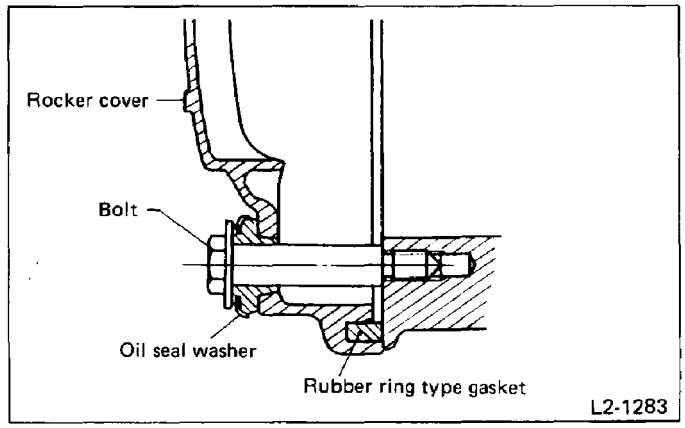

Fig. 114

CRANKSHAFT

The crankshaft is supported by four bearings. Two crank pins are used between adjacent crank journals.
These crank pins are located equally at an angle of 60° and are numbered #1, #6, #3, #2, #5 and #4 in the clockwise direction.

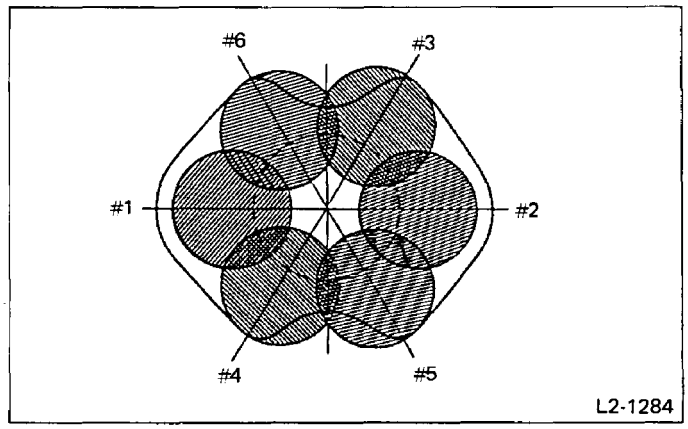

Fig. 115

CRANKSHAFT PULLEY

1) The crankshaft pulley is a damper type into which a bushing is pressed. This results in reduced torsional vibration which occurs in a long crankshaft.
2) The pulley is a one-stage type which is used with a six-crested, ribbed V-belt to improve serviceability. Belt tension is adjusted by moving the screw on the belt-tension pulley.

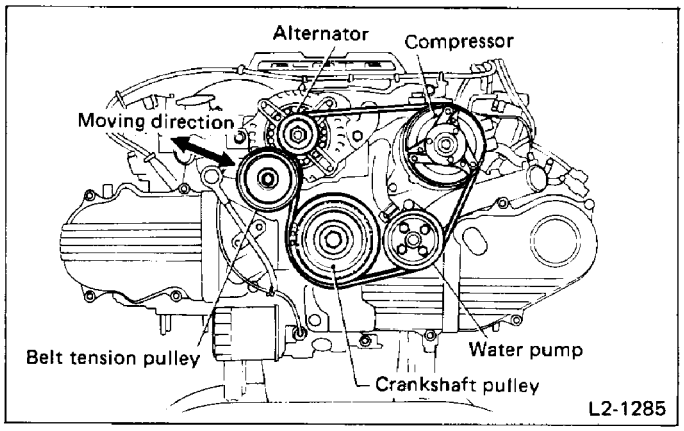

Fig. 116

Valve Mechanism

1) The valve mechanism adopts a timing belt driven overhead camshaft (OHC) type.
2) The valve mechanism is provided with the hydraulic lash adjusters for maintenance-free, noiseless valve operation.
3) The width of the left and right timing belts is designed to accommodate loads.
The left timing belt is equipped with a belt-tension adjuster to maintain constant tension.

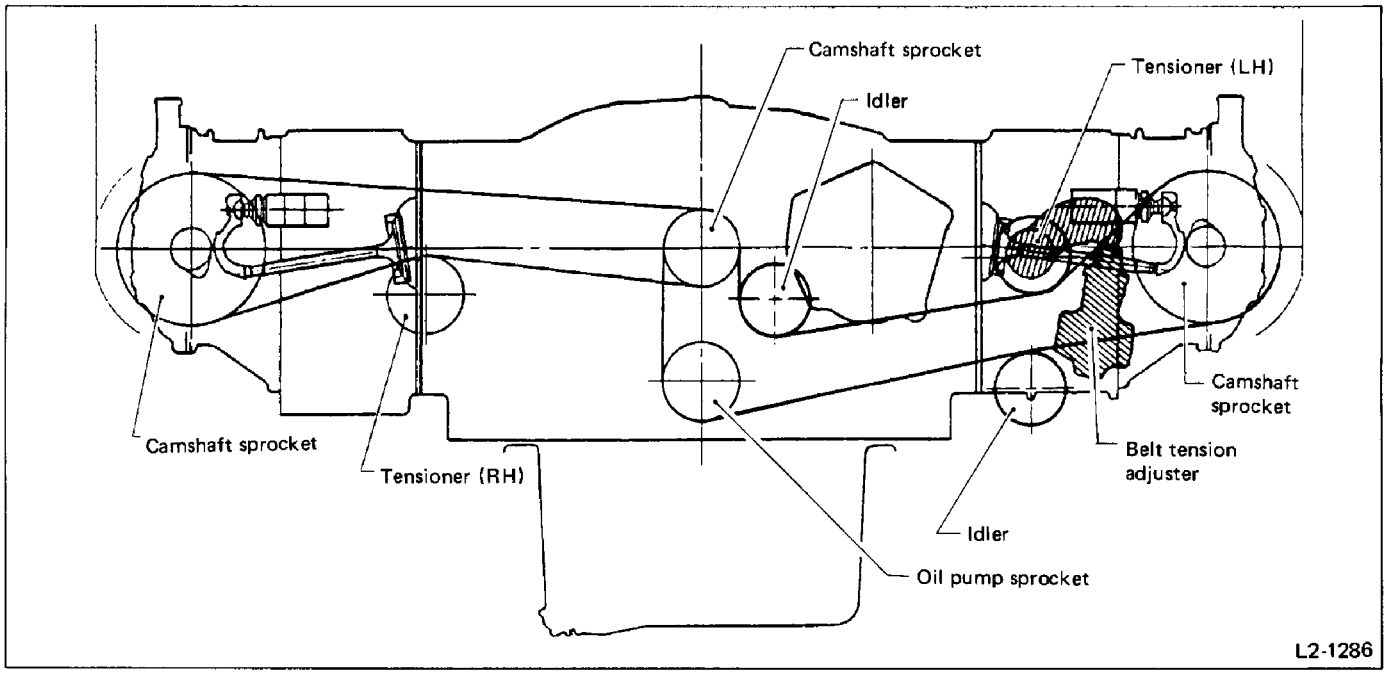

Fig. 117

CAMSHAFT

1) The camshafts are made of special cast iron, and are completely treated with Lubrite except for the bearing portions to improve initial fitting to the rocker arms. The cam rubbed surface is chilled to increase wear-resistance.
2) The cam profile is specially designed for this OHC type, and features higher output and less fuel consumption.
3) The cam base circle has an oil hole for lubricating the rocker arm. The distributor drive gear is mounted on the left-hand camshaft.

VALVE ROCKER AND VALVE LASH ADJUSTER

1) The rocker arms are special steel forgings having great strength and rigidity. Each arm is fitted with a sintered metal tip to improve wear resistance.
2) The hydraulic valve lash adjuster eliminates the need for valve clearance adjustment.
3) The rocker arms and valve lash adjusters are common between intake and exhaust valves.

VALVE AND VALVE SPRING

1) The valve has a small valve stem diameter [7 mm (0.28 in) dia.] to reduce the valve weight.
2) Both the intake and exhaust valve springs are non-linear-pitch, double types.
3) The variable pitch valve spring is adopted to improve valve follow-up performance at high engine speeds.

BELT TENSION ADJUSTER, TENSIONER

1) The belt tension adjuster is oil-filled and consists of a spring and a special screw.
2) The adjuster used with the left timing belt automatically adjusts and maintains belt tension.
3) The left belt tensioner is supported by a self-lubricating, resin bearing.

Operation

The belt tension adjuster applies a constant load to the contact portions and the arm and operates as follows:

- Operation in the direction of belt elongation
  (1) If the left timing belt becomes loose, the adjuster shaft turns counterclockwise by spring tension when viewed from the bottom.
  (2) The rod which meshes with the end of the adjuster shaft is then lifted.
  The rod is not turned by the bearing but moves only up and down.
  (3) The cap, which is coupled to the rod with a cotter pin, moves to push the tensioner arm up.
  (4) When the force lowering the arm by belt tension and the force to raising the cap by spring tension are balanced, the shaft stops. This maintains constant belt tension.
- Operation in the direction of belt contraction
  (Absorbs a change in belt length with a change in temperature)
  Basically, the belt-tension adjuster operates in the reverse manner of belt elongation.

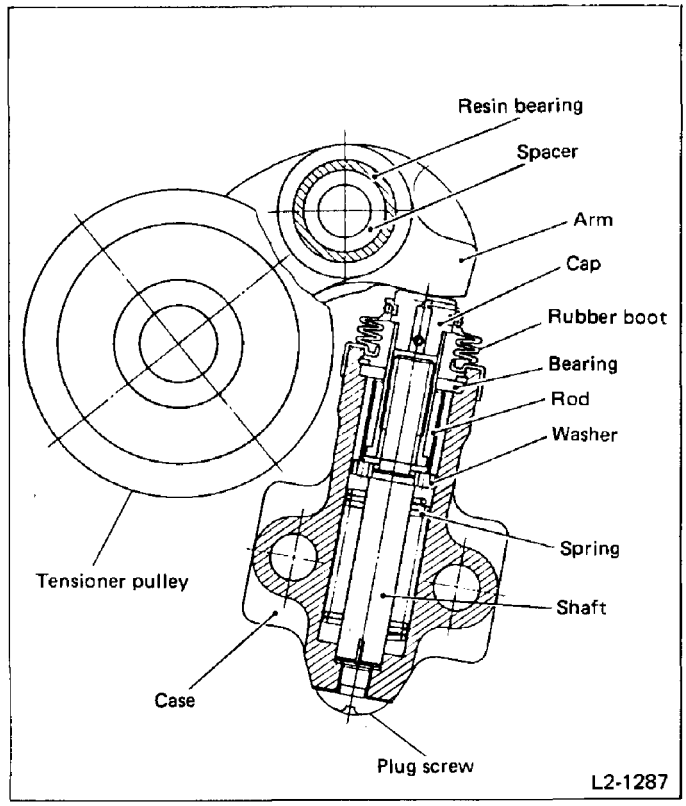

Fig. 118

A screw is used to connect the shaft and rod so that the tensioner arm can be pushed up easily and not pushed down.

CAMSHAFT SPROCKET AND TIMING BELT

1) The camshaft sprocket has special round teeth featuring positive engagement with belt teeth and smooth, low-noise operation.
2) The timing belt is composed of a core featuring great strength and less elongation, and a canvas (tooth face portion) having superior wear resistance and highly heat-resistant rubber.
3) A heavy load is applied to the left timing belt by the oil pump. For this reason, this belt is 6 mm (0.24 in) wider than the right belt.

TIMING BELT COVER

1) The resin-mold timing belt cover, consisting of five pieces, is used to protect the timing belt against dust and water.
2) Right-hand side cover has an access hole for belt tensioner adjustment.

SPECIFICATIONS AND SERVICE DATA

SPECIFICATIONS

ENGINE	Type		Horizontally opposed, liquid cooled, 6-cylinder, 4-stroke gasoline engine with multi-point fuel injection
	Valve arrangement		Over-head camshaft type
	Bore x Stroke mm (in)		92 x 67 (3.62 x 2.64)
	Piston displacement cm^3 (cc, cu in)		2,672 (2,672, 163.05)
	Compression ratio		9.5
	Compression pressure (at 350 rpm) kPa (kg/cm^2, psi)		1,157 (11.8, 168)
	Number of piston rings		Pressure ring: 2, Oil ring: 1
	Intake valve timing	Opening	12° BTDC
		Closing	60° ABDC
	Exhaust valve timing	Opening	60° BBDC
		Closing	16° ATDC
	Idling speed (At neutral (or N) or P position) rpm		750 ± 100
	Firing order		1 → 6 → 3 → 2 → 5 → 4
	Ignition timing BTDC/rpm		20°/750

SERVICE DATA

Cylinder head	Surface warpage limit			0.075 mm	(0.0030 in)
	Surface grinding limit			0.3 mm	(0.012 in)
	Standard height			90.6 mm	(3.567 in)
Valve set	Refacing angle			90°	
	Wear limit			0.5 mm	(0.020 in)
	Contacting width		Intake	1.2 – 1.8 mm	(0.047 – 0.071 in)
			Exhaust	1.5 – 2.0 mm	(0.059 – 0.079 in)
Valve guide	Inner diameter			7.000 – 7.015 mm	(0.2756 – 0.2762 in)
	Protrusion above head			17 – 18 mm	(0.67 – 0.71 in)
Valve stem	Head edge thickness		Intake STD	1.3 mm	(0.051 in)
			Limit	0.8 mm	(0.031 in)
			Exhaust STD	1.3 mm	(0.051 in)
			Limit	0.8 mm	(0.031 in)
	Stem diameter		Intake	6.950 – 6.965 mm	(0.2736 – 0.2742 in)
			Exhaust	6.945 – 6.960 mm	(0.2734 – 0.2740 in)
	Stem oil clearance (between valve guide and valve stem)	STD	Intake	0.035 – 0.065 mm	(0.0014 – 0.0026 in)
			Exhaust	0.040 – 0.070 mm	(0.0016 – 0.0028 in)
		Limit		0.15 mm	(0.0059 in)
	Overall length		Intake & Exhaust	107.58 mm	(4.2354 in)
Valve spring	Free length		Outer spring	51.7 mm	(2.035 in)
			Inner spring	50.3 mm	(1.980 in)
	Squareness		Outer spring	2.3 mm	(0.091 in)
			Inner spring	2.2 mm	(0.087 in)
	Tension/spring height		Outer spring	177.5 – 204.0 N (18.1 – 20.8 kg, 39.9 – 45.9 lb)/ 41.5 mm (1.634 in)	
				447.2 – 513.9 N (45.6 – 52.4 kg, 100.5 – 115.5 lb)/ 31.5 mm (1.240 in)	
			Inner spring	88.3 – 101.0 N (9.0 – 10.3 kg, 19.8 – 22.7 lb)/ 38.5 mm (1.516 in)	
				201.0 – 230.5 N (20.5 – 23.5 kg, 45.2 – 51.8 lb)/ 28.5 mm (1.122 in)	

STD: Standard

Valve lash adjuster	Outer diameter		21.380 – 21.393 mm	(0.8417 – 0.8422 in)
	Cylinder head adjuster hole I.D.		21.400 – 21.441 mm	(0.8425 – 0.8441 in)
	Adjuster-to-hole clearance	STD	0.007 – 0.061 mm	(0.0003 – 0.0024 in)
		Limit	0.1 mm	(0.004 in)
Cylinder block	Surface warpage limit (mating with cylinder head)		0.075 mm	(0.0030 in)
	Surface grinding limit		0.4 mm	(0.016 in)
	Metal housing I.D.		59.000 – 59.018 mm	(2.3228 – 2.3235 in)
	Oil seal hole I.D.	Front and center	59.000 – 59.010 mm	(2.3228 – 2.3232 in)
		Rear	93.000 – 93.035 mm	(3.6614 – 3.6628 in)
	Cylinder bore	STD	91.985 – 92.015 mm	(3.6214 – 3.6226 in)
		Taper limit	0.050 mm	(0.0020 in)
		Out-of roundness limit	0.050 mm	(0.0020 in)
		Piston clearance STD	0.015 – 0.035 mm	(0.0006 – 0.0014 in)
		Limit	0.060 mm	(0.0024 in)
		Enlarging (boring) limit	0.5 mm	(0.020 in)
Piston	Outer diameter	STD	91.970 – 91.980 mm	(3.6209 – 3.6213 in)
		0.25 mm (0.0098 in) OS	92.220 – 92.230 mm	(3.6307 – 3.6311 in)
		0.50 mm (0.0197 in) OS	92.470 – 92.480 mm	(3.6405 – 3.6409 in)
	Standard inner diameter of piston pin hole		20.999 – 21.009 mm	(0.8267 – 0.8271 in)
Piston pin	Outer diameter		20.994 – 21.000 mm	(0.8265 – 0.8268 in)
	Standard clearance between piston pin and hole in piston		0.001 – 0.015 mm	(0.00004 – 0.00059 in)
	Degree of fit		Piston pin must be fitted into position with thumb at 20°C (68°F).	
	Standard clearance between piston pin and hole in connecting rod		0 – 0.022 mm	(0 – 0.0009 in)
Piston ring	Width	Top ring	1.17 – 1.19 mm	(0.0461 – 0.0469 in)
		Second ring	1.47 – 1.49 mm	(0.0579 – 0.0587 in)
		Oil ring	Combination ring	
	Radial wall thickness	Top ring	3.0 – 3.2 mm	(0.118 – 0.126 in)
		Second ring	3.6 – 3.8 mm	(0.142 – 0.150 in)
		Oil ring	Combination ring	
	Piston ring gap	Top & Second ring STD	0.2 – 0.35 mm	(0.0079 – 0.0138 in)
		Limit	1.5 mm	(0.059 in)
		Oil ring STD	0.3 – 0.9 mm	(0.012 – 0.035 in)
		Limit	2.0 mm	(0.079 in)
	Clearance between piston ring and piston ring groove	Top ring STD	0.040 – 0.080 mm	(0.0016 – 0.0031 in)
		Limit	0.15 mm	(0.0059 in)
		Second ring STD	0.030 – 0.070 mm	(0.0012 – 0.0028 in)
		Limit	0.15 mm	(0.0059 in)
		Oil ring STD	0 mm	(0 in)
		Limit	0 mm	(0 in)

STD: Standard OS: Oversize

Connecting rod	Distance between big end and small end hole		116.95 – 117.05 mm	(4.6043 – 4.6083 in)
	Crank pin bore diameter		48.000 – 48.019 mm	(1.8898 – 1.8905 in)
	Piston pin bore diameter		21.000 – 21.016 mm	(0.8268 – 0.8274 in)
	Width at big end		19.35 – 19.43 mm	(0.7618 – 0.7650 in)
	Side clearance	STD	0.070 – 0.330 mm	(0.0028 – 0.0130 in)
		Limit	0.4 mm	(0.016 in)
	Bend twist per 100 mm (3.94 in) in length	Limit	0.10 mm	(0.0039 in)
Connecting rod bearing	Thickness at center portion	STD	1.485 – 1.490 mm	(0.0585 – 0.0587 in)
		0.03 mm (0.0012 in) US	1.500 – 1.505 mm	(0.0591 – 0.0593 in)
		0.05 mm (0.0020 in) US	1.510 – 1.515 mm	(0.0594 – 0.0596 in)
		0.25 mm (0.0098 in) US	1.610 – 1.615 mm	(0.0634 – 0.0636 in)
	Oil clearance	STD	0.010 – 0.070 mm	(0.0004 – 0.0028 in)
		Limit	0.10 mm	(0.0039 in)
Crankshaft	Bend limit		0.035 mm	(0.0014 in)
	Thrust clearance	STD	0.010 – 0.095 mm	(0.0004 – 0.0037 in)
		Limit	0.30 mm	(0.0118 in)
	Crank journal outer diameter	Front STD	54.957 – 54.972 mm	(2.1637 – 2.1642 in)
		0.03 mm (0.0012 in) US	54.927 – 54.942 mm	(2.1625 – 2.1631 in)
		0.05 mm (0.0020 in) US	54.907 – 54.922 mm	(2.1617 – 2.1623 in)
		0.25 mm (0.0098 in) US	54.707 – 54.722 mm	(2.1538 – 2.1544 in)
		Center & Center II STD	54.954 – 54.970 mm	(2.1635 – 2.1642 in)
		0.03 mm (0.0012 in) US	54.924 – 54.940 mm	(2.1624 – 2.1630 in)
		0.05 mm (0.0020 in) US	54.904 – 54.920 mm	(2.1616 – 2.1622 in)
		0.25 mm (0.0098 in) US	54.704 – 54.720 mm	(2.1537 – 2.1543 in)
		Rear STD	54.955 – 54.970 mm	(2.1636 – 2.1642 in)
		0.03 mm (0.0012 in) US	54.925 – 54.940 mm	(2.1624 – 2.1630 in)
		0.05 mm (0.0020 in) US	54.905 – 54.920 mm	(2.1616 – 2.1622 in)
		0.25 mm (0.0098 in) US	54.705 – 54.720 mm	(2.1537 – 2.1543 in)
	Width at center portion		25.970 – 26.015 mm	(1.0224 – 1.0242 in)
	Oil clearance	Front & Rear STD	0.003 – 0.036 mm	(0.0001 – 0.0014 in)
		Limit	0.055 mm	(0.0022 in)
		Center & Center II STD	0.008 – 0.027 mm	(0.0003 – 0.0011 in)
		Limit	0.045 mm	(0.0018 in)
	Out-of roundness		0.030 mm (0.0012 in) or less	
	Grinding limit		0.250 mm	(0.0098 in)
	Crankpin outer diameter	STD	44.995 – 45.010 mm	(1.7715 – 1.7720 in)
		0.03 mm (0.0012 in) US	44.965 – 44.980 mm	(1.7703 – 1.7709 in)
		0.05 mm (0.0020 in) US	44.945 – 44.960 mm	(1.7695 – 1.7701 in)
		0.25 mm (0.0098 in) US	44.745 – 44.760 mm	(1.7616 – 1.7622 in)
	Width		19.50 – 19.68 mm	(0.7677 – 0.7748 in)
	Oil clearance	STD	0.010 – 0.054 mm	(0.0004 – 0.0021 in)
		Limit	0.10 mm	(0.0039 in)
	Out-of roundness		0.030 mm (0.0012 in) or less	
	Grinding limit		0.250 mm	(0.0098 in)

STD: Standard **OS: Oversize** **US: Undersize**

Crankshaft bearing	Thickness	Front & Rear STD	2.015 – 2.019 mm	(0.0793 – 0.0795 in)
		0.03 mm (0.0012 in) US	2.030 – 2.034 mm	(0.0799 – 0.0801 in)
		0.05 mm (0.0020 in) US	2.040 – 2.044 mm	(0.0803 – 0.0805 in)
		0.25 mm (0.0098 in) US	2.140 – 2.144 mm	(0.0843 – 0.0844 in)
		Center & Center II STD	2.019 – 2.022 mm	(0.0795 – 0.0796 in)
		0.03 mm (0.0012 in) US	2.034 – 2.037 mm	(0.0801 – 0.0802 in)
		0.05 mm (0.0020 in) US	2.044 – 2.047 mm	(0.0805 – 0.0806 in)
		0.25 mm (0.0098 in) US	2.144 – 2.147 mm	(0.0844 – 0.0845 in)
	Width	Center STD	25.920 – 25.960 mm	(1.0205 – 1.0220 in)
Camshaft	Bend limit		0.025 mm	(0.0010 in)
	Thrust clearance	STD	0.030 – 0.260 mm	(0.0012 – 0.0102 in)
		Limit	0.35 mm	(0.0138 in)
	Cam lobe height	STD	39.64 – 39.74 mm	(1.5606 – 1.5646 in)
		Wear limit	39.49 mm	(1.5547 in)
	Cam journal outer diameter	Front	37.964 – 37.980 mm	(1.4946 – 1.4953 in)
		Center	48.464 – 48.480 mm	(1.9080 – 1.9087 in)
		Center II	47.964 – 47.980 mm	(1.8883 – 1.8890 in)
		Rear	49.464 – 47.480 mm	(1.9474 – 1.8693 in)
		LH distributor	38.964 – 38.980 mm	(1.5340 – 1.5346 in)
	Oil clearance	STD	0.020 – 0.054 mm	(0.0008 – 0.0021 in)
		Limit	0.070 mm	(0.0028 in)
Camshaft case	Camshaft journal inner diameter	Front (camshaft support inner diameter)	*1 38.000 – 38.018 mm	(1.4961 – 1.4968 in)
		Center	48.500 – 48.525 mm	(1.9094 – 1.9104 in)
		Center II	48.000 – 48.025 mm	(1.8898 – 1.8907 in)
		Rear	47.500 – 47.525 mm	(1.8701 – 1.8711 in)
		Distributor	39.000 – 39.013 mm	(1.5354 – 1.5359 in)
	Camshaft support depth of spigot		19.00 – 19.08 mm	(0.7480 – 0.7512 in)
Camshaft support	I.D.		38.000 – 38.018 mm	(1.4961 – 1.4968 in)
	O.D.		57.971 – 59.990 mm	(2.2823 – 2.3618 in)
	Height of spigot		14.95 – 15.00 mm	(0.5886 – 0.5906 in)

STD: Standard **US: Undersize** ***1 Camshaft support I.D.**

COMPONENT PARTS

Cylinder Block and Oil Pan

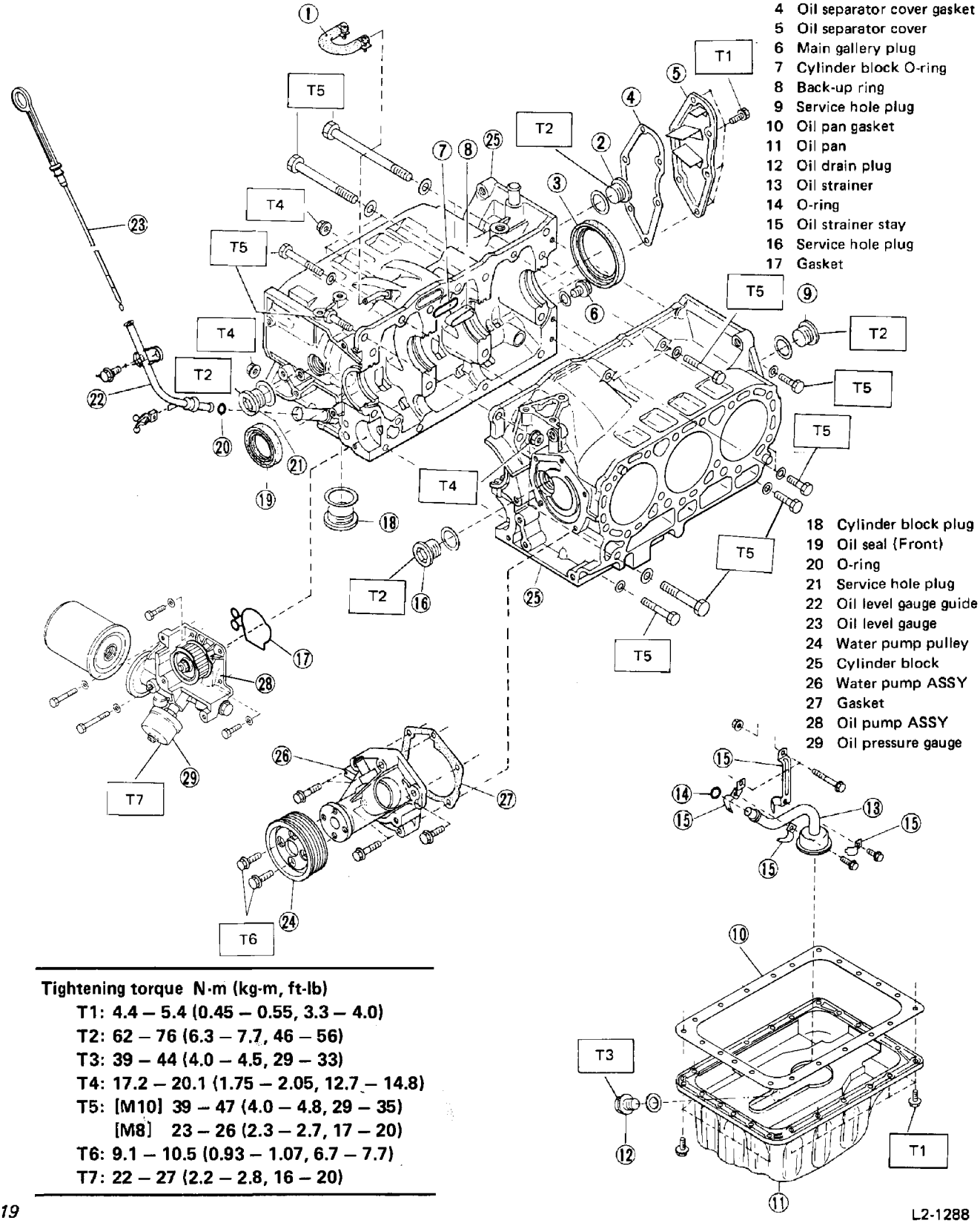

1 Water by-pass hose
2 Service hole plug
3 Oil seal (Rear)
4 Oil separator cover gasket
5 Oil separator cover
6 Main gallery plug
7 Cylinder block O-ring
8 Back-up ring
9 Service hole plug
10 Oil pan gasket
11 Oil pan
12 Oil drain plug
13 Oil strainer
14 O-ring
15 Oil strainer stay
16 Service hole plug
17 Gasket
18 Cylinder block plug
19 Oil seal (Front)
20 O-ring
21 Service hole plug
22 Oil level gauge guide
23 Oil level gauge
24 Water pump pulley
25 Cylinder block
26 Water pump ASSY
27 Gasket
28 Oil pump ASSY
29 Oil pressure gauge

Tightening torque N·m (kg-m, ft-lb)

T1: 4.4 – 5.4 (0.45 – 0.55, 3.3 – 4.0)
T2: 62 – 76 (6.3 – 7.7, 46 – 56)
T3: 39 – 44 (4.0 – 4.5, 29 – 33)
T4: 17.2 – 20.1 (1.75 – 2.05, 12.7 – 14.8)
T5: [M10] 39 – 47 (4.0 – 4.8, 29 – 35)
[M8] 23 – 26 (2.3 – 2.7, 17 – 20)
T6: 9.1 – 10.5 (0.93 – 1.07, 6.7 – 7.7)
T7: 22 – 27 (2.2 – 2.8, 16 – 20)

Fig. 119

L2-1288

Crankshaft and Piston

1 Reinforcement
2 Drive plate
3 Flywheel
4 Ball bearing
5 Circlip
6 Piston pin
7 Connecting rod
8 Connecting rod bearing
9 Piston
10 Top ring
11 Second ring
12 Oil ring
13 Crankshaft bearing
14 Crankshaft
15 Crankshaft pulley
16 V-belt
17 Crankshaft sprocket CP
18 Crankshaft sprocket No. 2
19 Woodruff key
20 Connecting rod cap
21 Connecting rod cap bolt
22 Connecting rod bearing

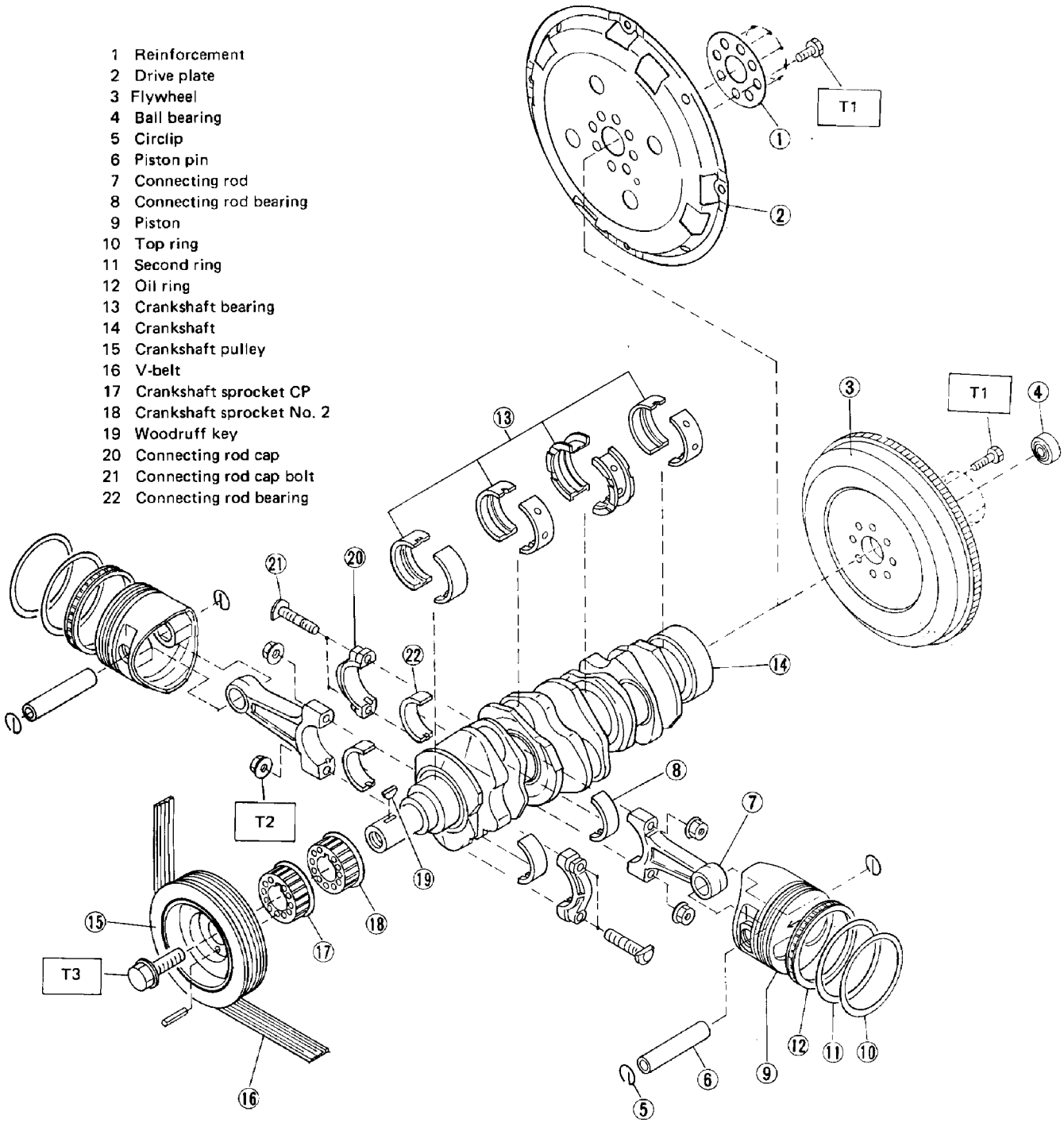

Tightening torque N·m (kg-m, ft-lb)
T1: 69 – 75 (7.0 – 7.6, 51 – 55)
T2: 39 – 42 (4.0 – 4.3, 29 – 31)
T3: 89 – 107 (9.1 – 10.9, 66 – 79)

Fig. 120

L2-1289

Cylinder Head and Flywheel Housing

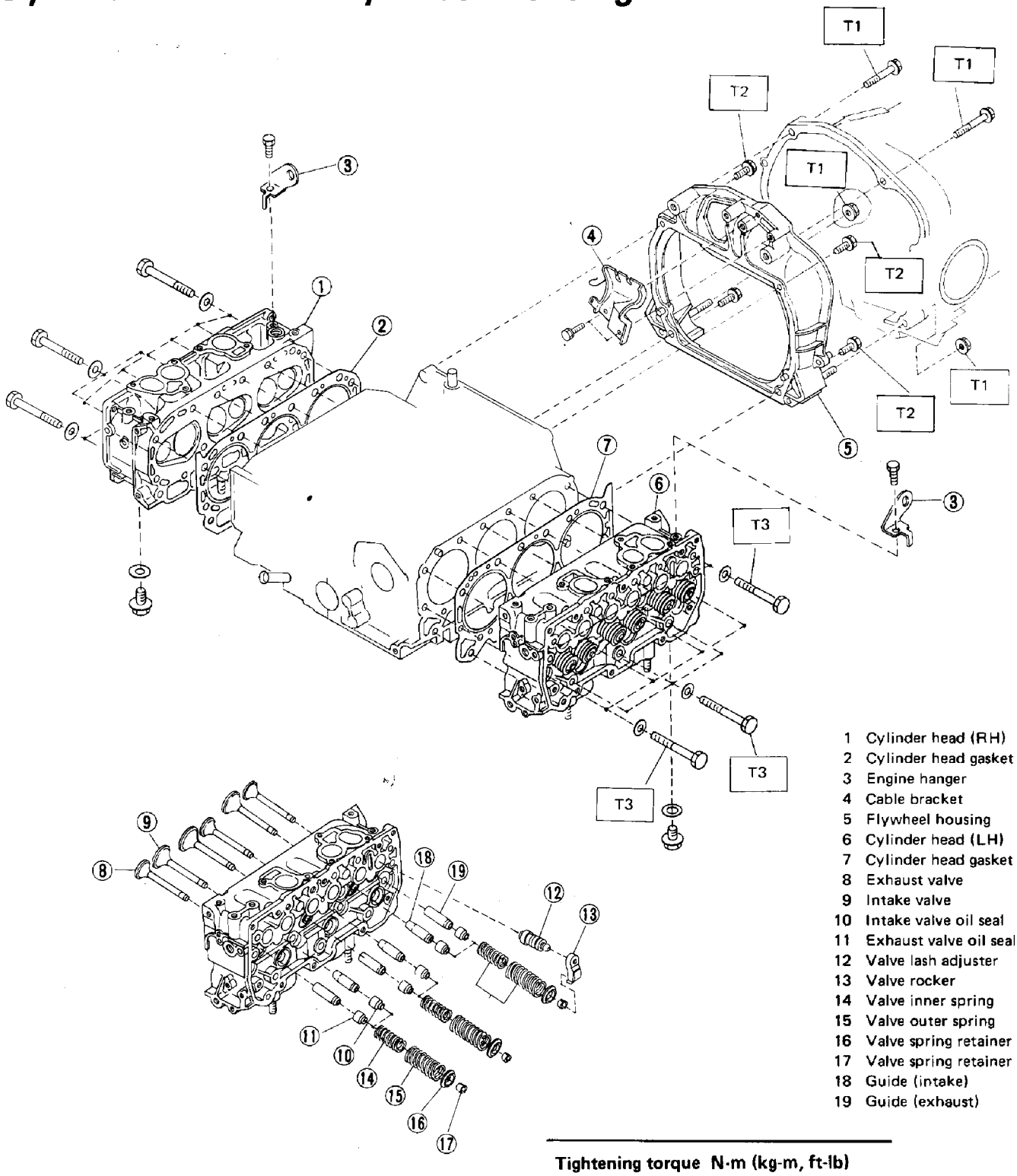

1 Cylinder head (RH)
2 Cylinder head gasket
3 Engine hanger
4 Cable bracket
5 Flywheel housing
6 Cylinder head (LH)
7 Cylinder head gasket
8 Exhaust valve
9 Intake valve
10 Intake valve oil seal
11 Exhaust valve oil seal
12 Valve lash adjuster
13 Valve rocker
14 Valve inner spring
15 Valve outer spring
16 Valve spring retainer
17 Valve spring retainer key
18 Guide (intake)
19 Guide (exhaust)

Tightening torque N·m (kg-m, ft-lb)
T1: 46 – 54 (4.7 – 5.5, 34 – 40)
T2: 34 – 40 (3.5 – 4.1, 25 – 30)
T3: 60 – 68 (6.1 – 6.9, 44 – 50)

Fig. 121

L2-1290

Camshaft and Timing Belt

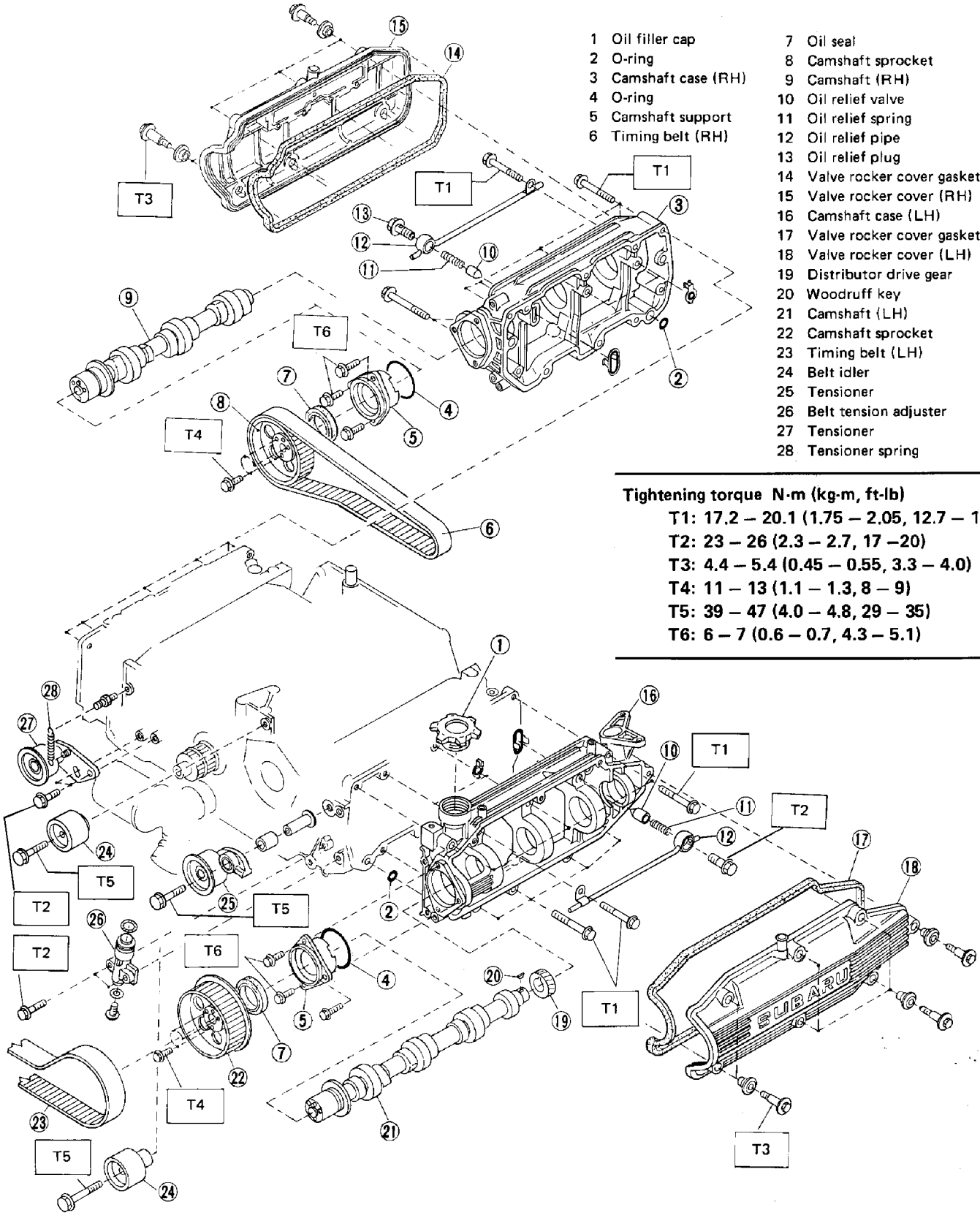

1 Oil filler cap
2 O-ring
3 Camshaft case (RH)
4 O-ring
5 Camshaft support
6 Timing belt (RH)
7 Oil seal
8 Camshaft sprocket
9 Camshaft (RH)
10 Oil relief valve
11 Oil relief spring
12 Oil relief pipe
13 Oil relief plug
14 Valve rocker cover gasket (RH)
15 Valve rocker cover (RH)
16 Camshaft case (LH)
17 Valve rocker cover gasket (LH)
18 Valve rocker cover (LH)
19 Distributor drive gear
20 Woodruff key
21 Camshaft (LH)
22 Camshaft sprocket
23 Timing belt (LH)
24 Belt idler
25 Tensioner
26 Belt tension adjuster
27 Tensioner
28 Tensioner spring

Tightening torque N·m (kg-m, ft-lb)

T1: 17.2 – 20.1 (1.75 – 2.05, 12.7 – 14.8)
T2: 23 – 26 (2.3 – 2.7, 17 –20)
T3: 4.4 – 5.4 (0.45 – 0.55, 3.3 – 4.0)
T4: 11 – 13 (1.1 – 1.3, 8 – 9)
T5: 39 – 47 (4.0 – 4.8, 29 – 35)
T6: 6 – 7 (0.6 – 0.7, 4.3 – 5.1)

Fig. 122

L2-1291

Belt Cover

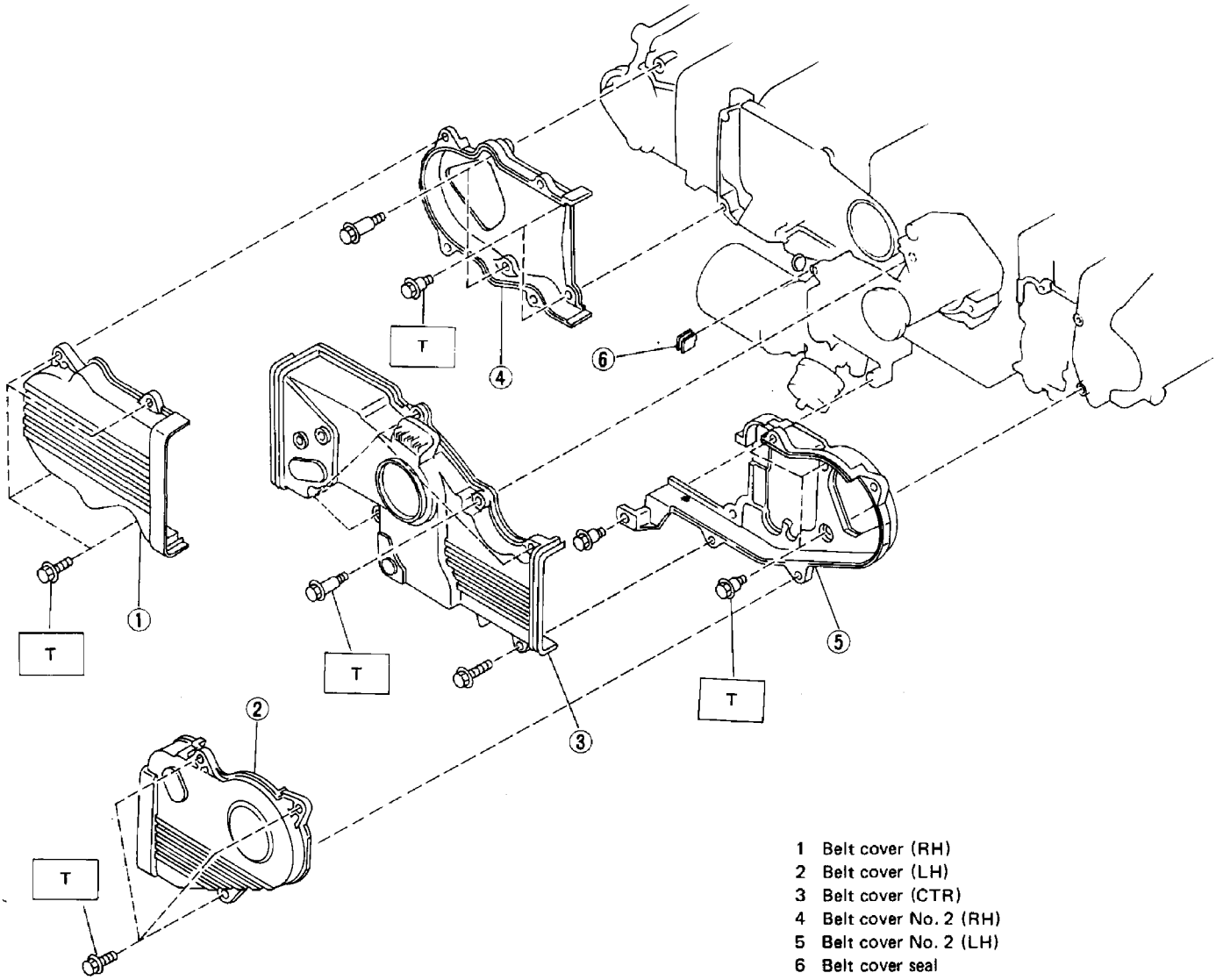

1 Belt cover (RH)
2 Belt cover (LH)
3 Belt cover (CTR)
4 Belt cover No. 2 (RH)
5 Belt cover No. 2 (LH)
6 Belt cover seal

Tightening torque N·m (kg-m, ft-lb)
T: 4.4 – 5.4 (0.45 – 0.55, 3.3 – 4.0)

Fig. 123

L2-1292

Electrical Equipment

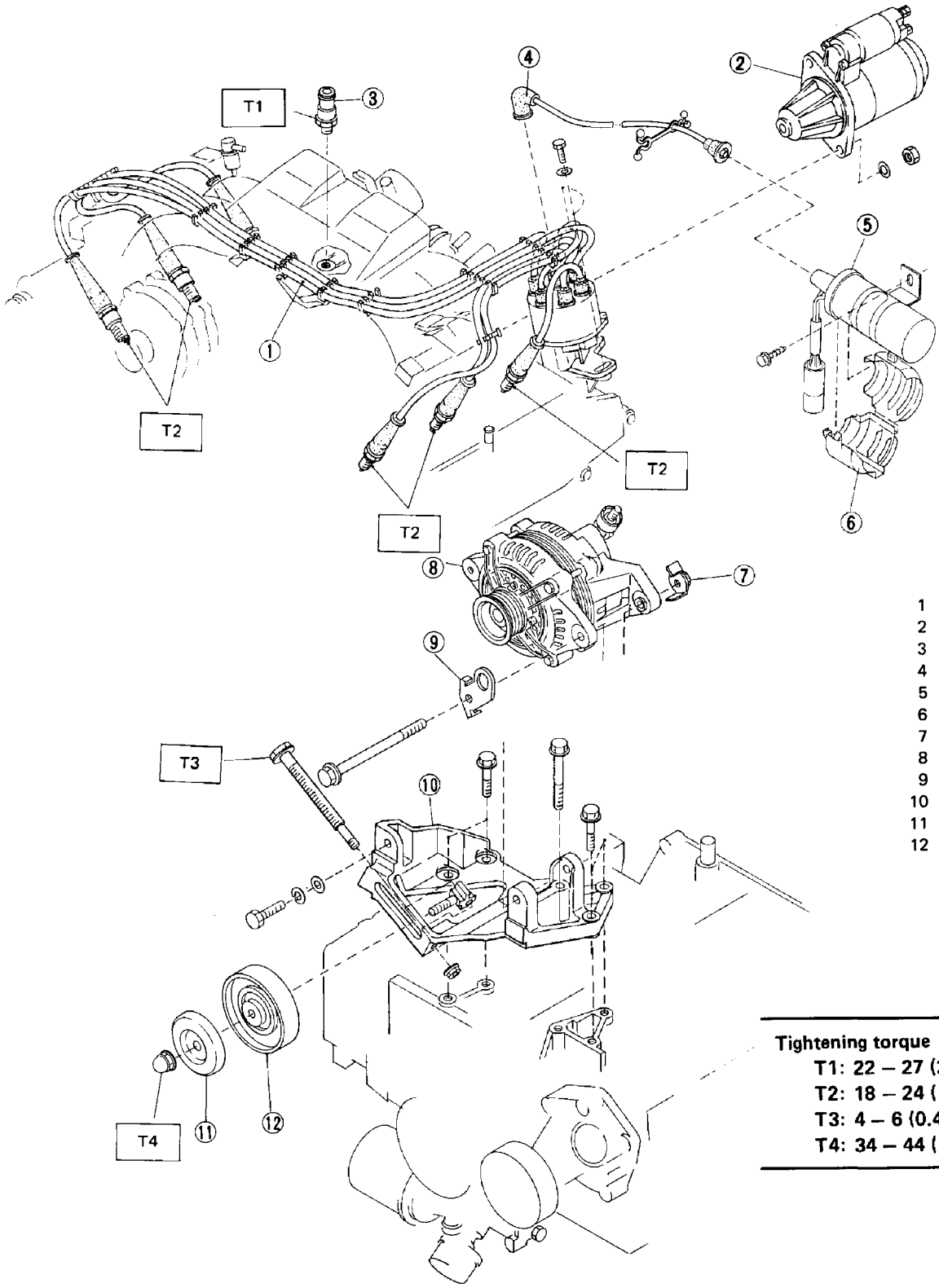

1 Spark plug cord
2 Starter
3 Knock sensor
4 Distributor
5 Ignition coil
6 Cover
7 Nut plate
8 Alternator
9 Engine hanger
10 Alternator bracket
11 Cover
12 Tensioner pulley

Tightening torque N·m (kg-m, ft-lb)
T1: 22 – 27 (2.2.– 2.8, 16 – 20)
T2: 18 – 24 (1.8 – 2.4, 13 – 17)
T3: 4 – 6 (0.4 – 0.6, 2.9 – 4.3)
T4: 34 – 44 (3.5 – 4.5, 25 – 33)

Fig. 124

L2-1293

SERVICE PROCEDURE

General Precautions

- Before disassembling engine, install ENGINE STAND (499817100) x 2.

Place a 5 cm (2.0 in) high wooden block under the ENGINE STAND at four places so that the oil pan does not touch the floor.

- Drain coolant and engine oil.
- All parts should be thoroughly cleaned, paying special attention to the engine oil passages, pistons and bearings.
- Rotating parts and sliding parts such as piston, bearing and gear should be coated with oil prior to ASSY.
- Be careful not to let oil, grease or coolant contact the timing belt and clutch disc.
- All removed parts, if to be reused, should be reinstalled in the original positions and directions.
- Gaskets and lock washers must be replaced with new ones. Liquid gasket should be used where specified to prevent leakage.
- Bolts, nuts and washers should be replaced with new ones as required.
- Even if necessary inspections have been made in advance, proceed with ASSY work while making rechecks.

Timing Belt and Belt Cover

REMOVAL

1) Loosen water pump pulley mounting bolts.
2) Loosen two alternator mounting bolts.
3) Loosen the tension pulley lock nut to release V-belt tension. When removing V-belt, check that adjuster bolt is turned counterclockwise fully in the direction which loosens the belt.

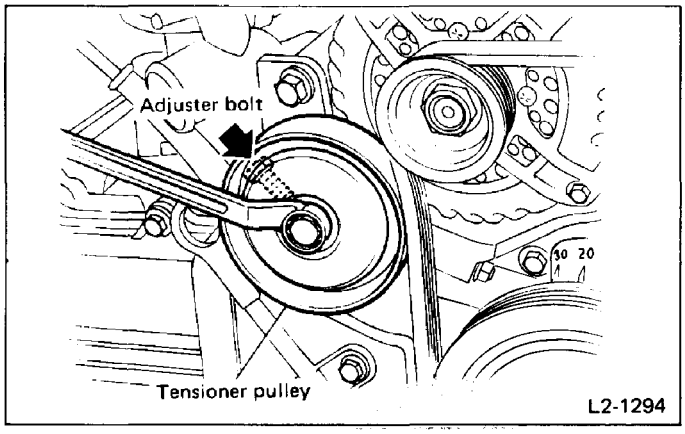

Fig. 125

4) Remove water pump pulley.
5) Remove crankshaft pulley. To lock crankshaft, use FLYWHEEL STOPPER [manual transmission model] or DRIVE PLATE STOPPER [automatic transmission model].

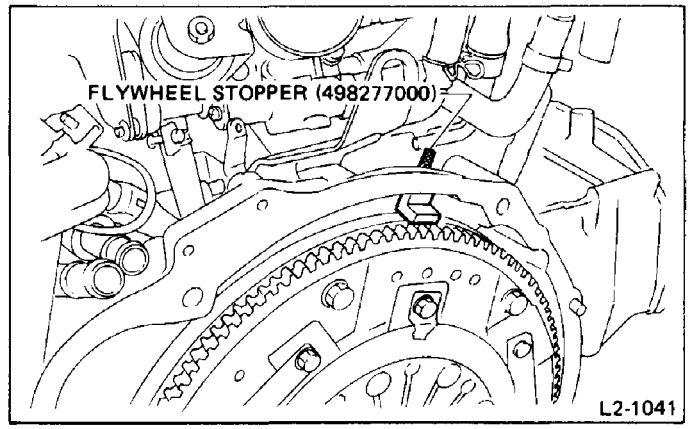

Fig. 126

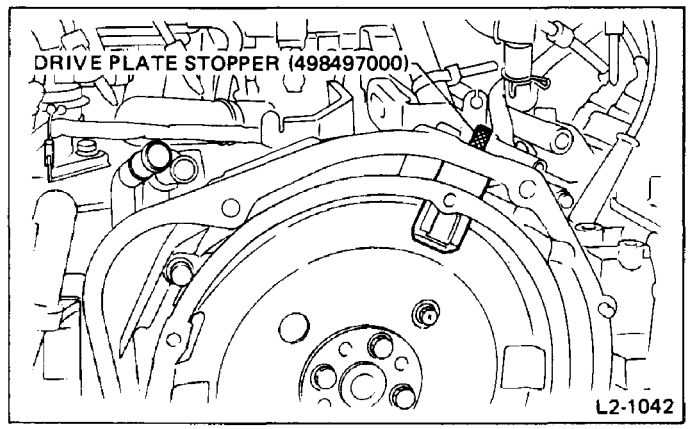

Fig. 127

6) Disconnect lead from oil pressure switch.
7) Remove oil level gauge guide together with gauge.

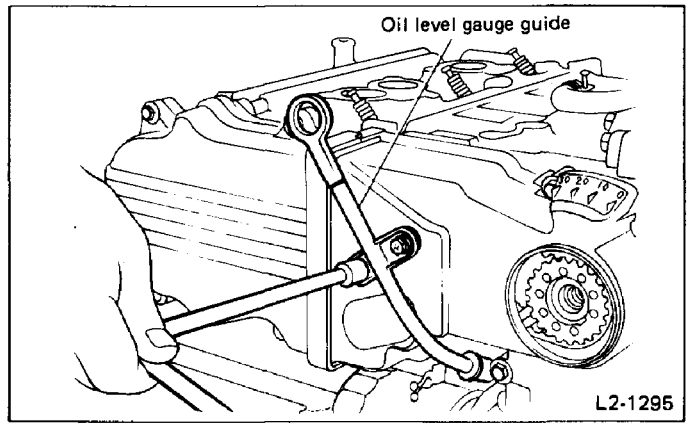

Fig. 128

8) Remove belt covers RH, LH and CTR.

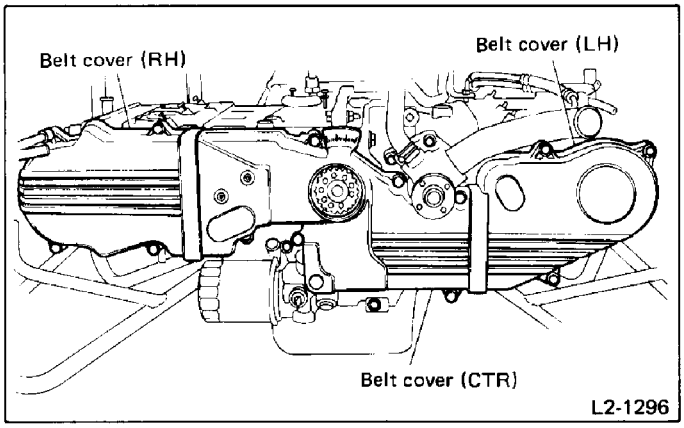

Fig. 129

9) Removing timing belt RH.
(1) Loosen tensioner mounting bolts on #1 cylinder by 1/2 turn.
(2) With tensioner fully turned to slacken belt, tighten mounting bolts.

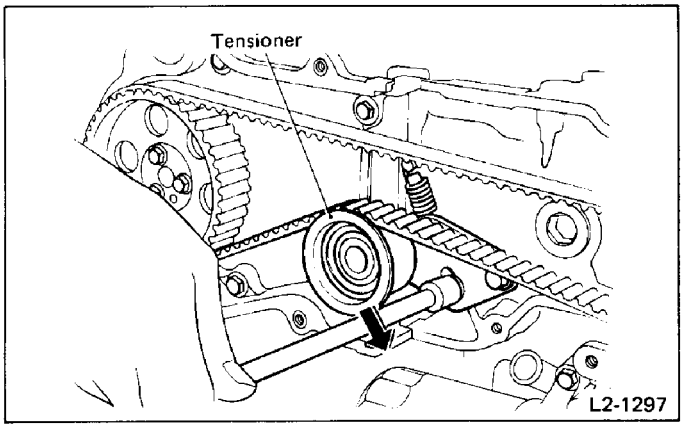

Fig. 130

(3) Mark rotating direction of timing belt, then remove belt.

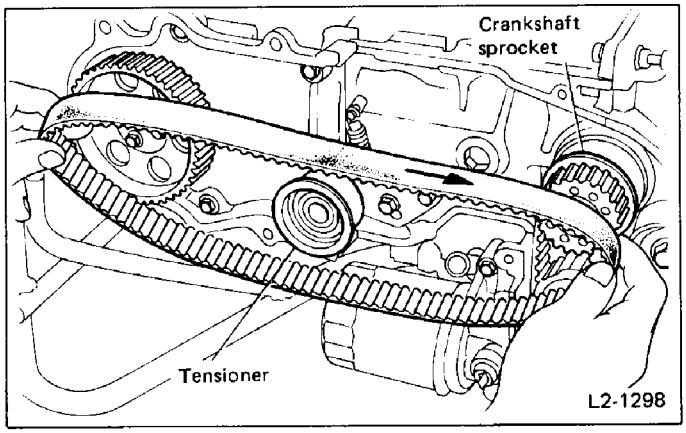

Fig. 131

10) Remove tensioner RH.
11) Remove crankshaft sprocket.
12) Removing timing belt LH.
(1) Remove idler pulley.

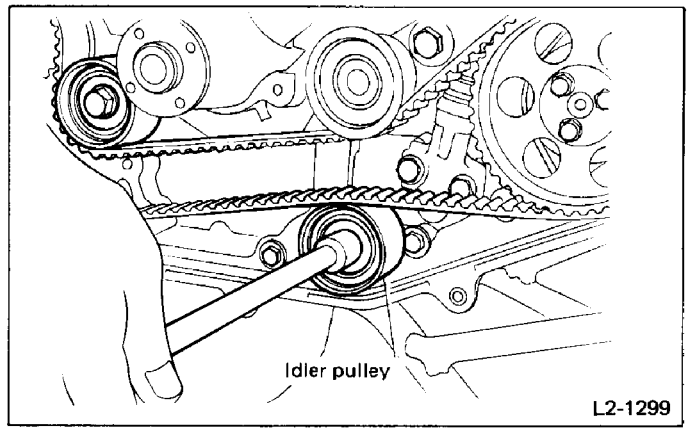

Fig. 132

(2) Remove plug rubber.

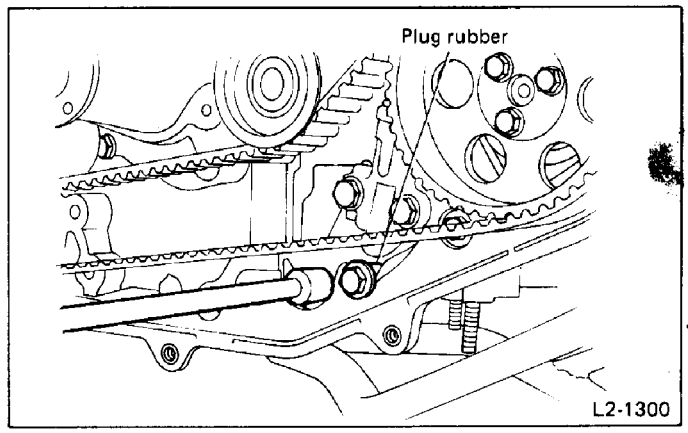

Fig. 133

(3) Remove plug screw from belt tension adjuster lower side.

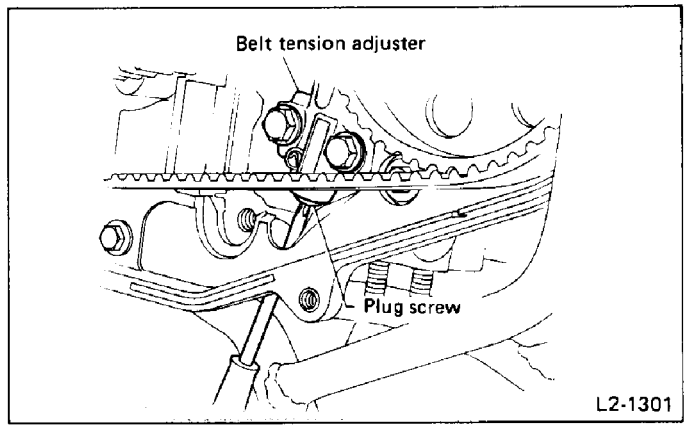

Fig. 134

(4) Insert a standard screwdriver into the hole in the bottom of belt tension adjuster. Turn the screw clockwise to loosen belt tension and install BELT ADJUSTER STOPPER (13082AA000). Remove the left belt tensioner.

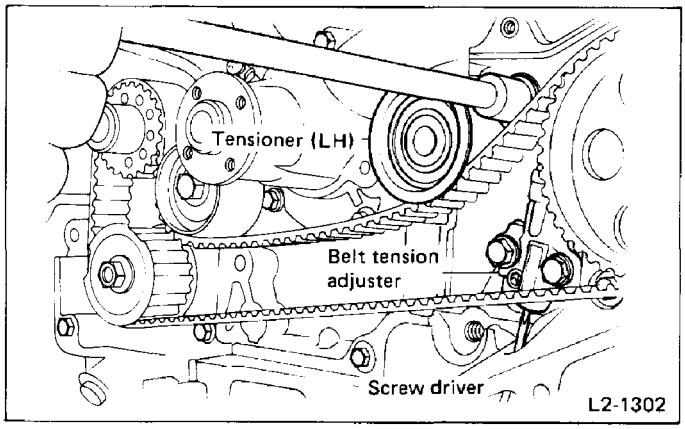

Fig. 135

(5) Remove timing belt after marking rotating direction of belt.

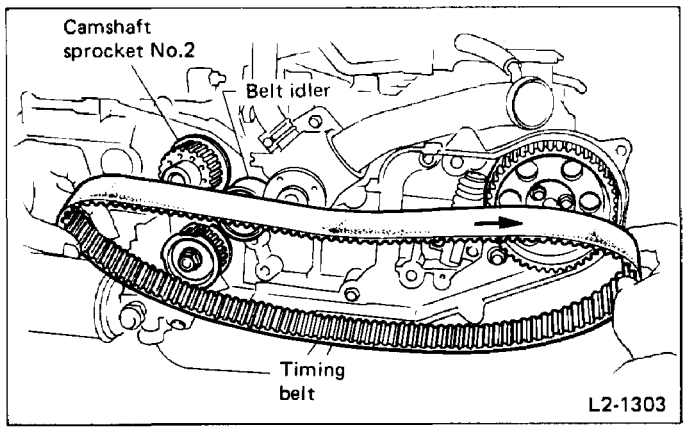

Fig. 136

13) Remove crankshaft sprocket No. 2 and idler pulley.
14) Remove belt tension adjuster.

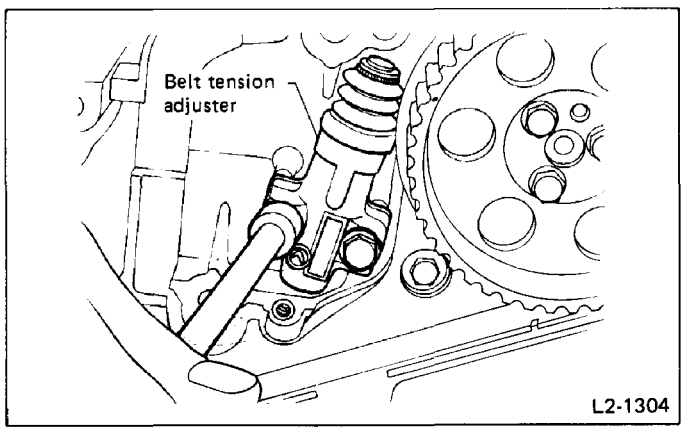

Fig. 137

After removing belt tension adjuster, reinstall plug screw in the bottom.

15) Remove camshaft sprocket RH and LH.

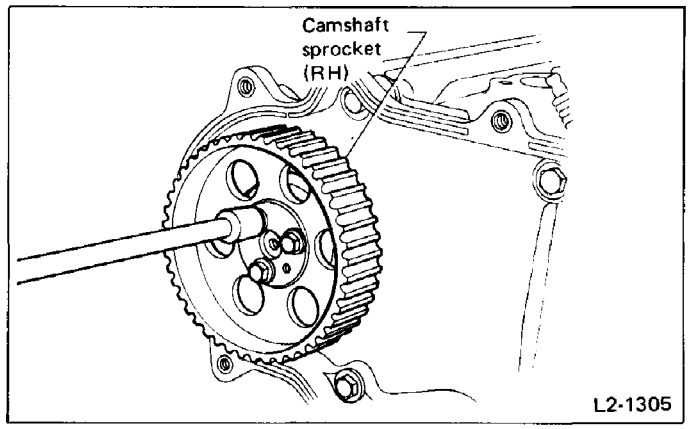

Fig. 138

16) Remove belt cover No. 2 RH and LH.

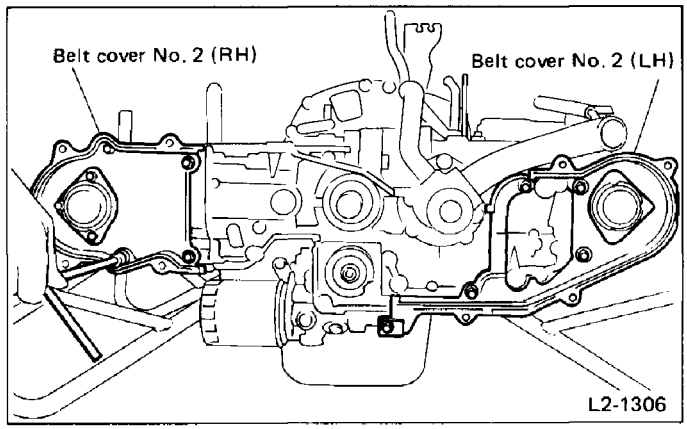

Fig. 139

INSPECTION

TIMING BELT

1) Check timing belt teeth for breaks, cracks, and wear. If any fault is found, replace belt.
2) Check the condition of back side of belt; if any crack is found, replace belt.

a. Be careful not to let oil, grease or coolant contact the belt. Remove quickly and thoroughly if this happens.
b. Do not bend the belt sharply.

TIMING BELT TENSIONER

1) Check tensioner roller for smooth rotation. Replace roller if noise or excessive play is noted.
2) Measure the out-of-squareness of tensioner roller H. If it exceeds 0.5 mm (0.020 in), replace roller.

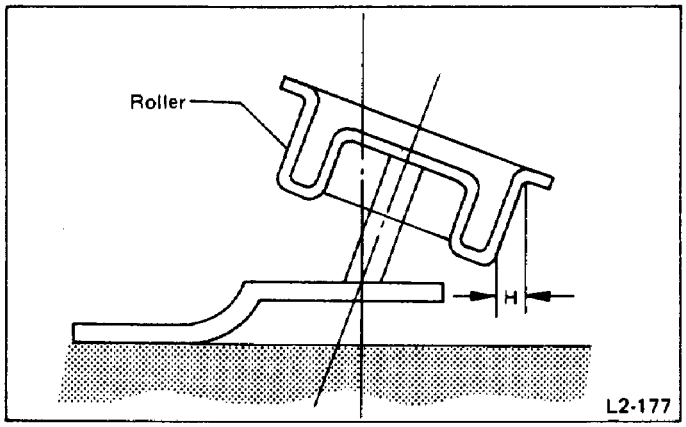

Fig. 141

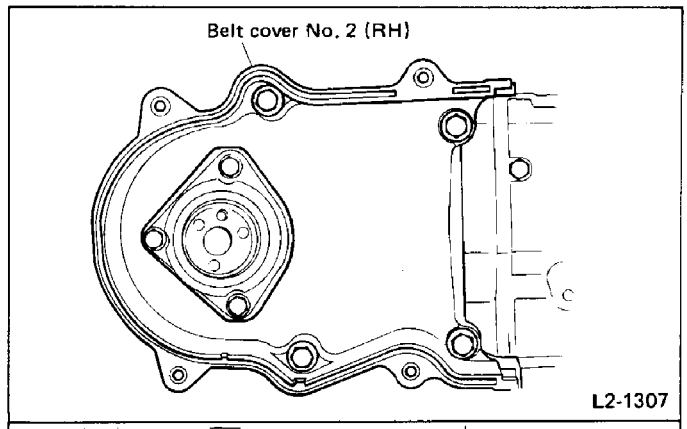

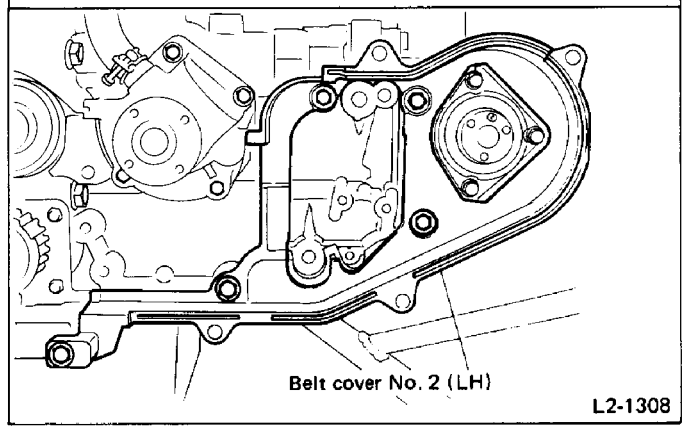

Fig. 142

BELT IDLER

Check idler for smooth rotation. Replace if noise or excessive play is noted.

INSTALLATION

1) Install belt cover No. 2 RH and LH.

Tightening torque:
4.4 – 5.4 N·m (0.45 – 0.55 kg-m, 3.3 – 4.0 ft-lb)

2) Install camshaft sprockets to right and left camshafts.

Tightening torque:
11 – 13 N·m (1.1 – 1.3 kg-m, 8 – 9 ft-lb)

3) Install belt tension adjuster.
(1) Remove plug screw from belt tension adjuster lower side.

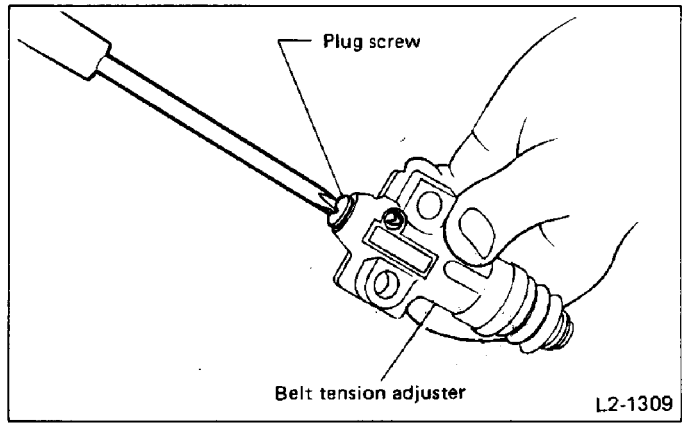

Fig. 143

(2) Insert a standard screwdriver into the hole in the bottom of belt tension adjuster. Turn the screw clockwise to compress rubber boot. Then install BELT ADJUSTER STOPPER (13082AA0000).

The clip furnished as a spare part can be used in place of BELT ADJUSTER STOPPER.

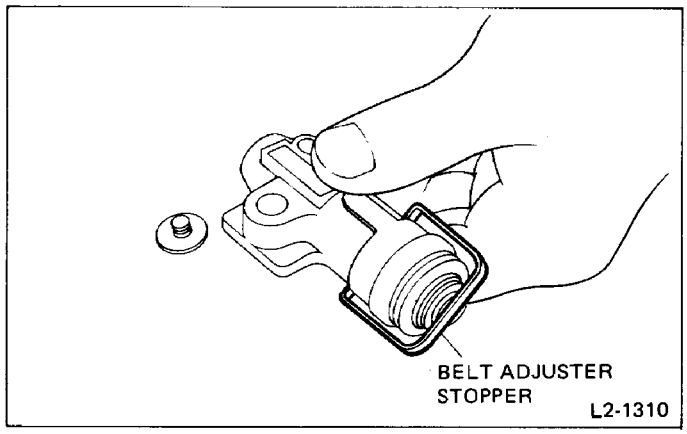

Fig. 144

(3) Using a syringe, add engine oil through air vent hole on top of rubber boot until it overflows.

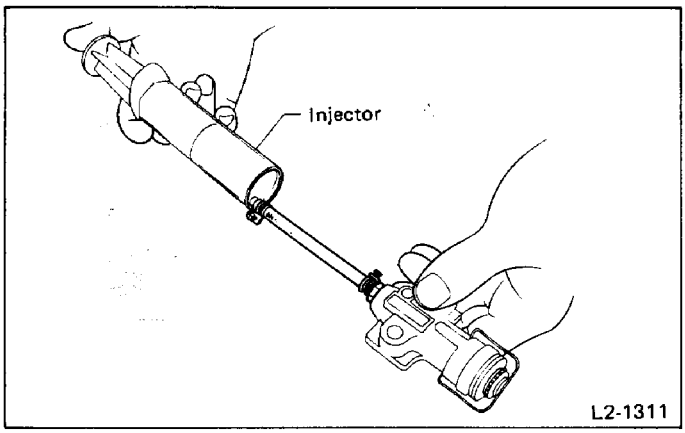

Fig. 145

(4) Install plug screw.

Be sure to use a new plug screw gasket.

(5) Install belt tension adjuster.

Tightening torque:
23 – 26 N·m (2.3 – 2.7 kg-m, 17 – 20 ft-lb)

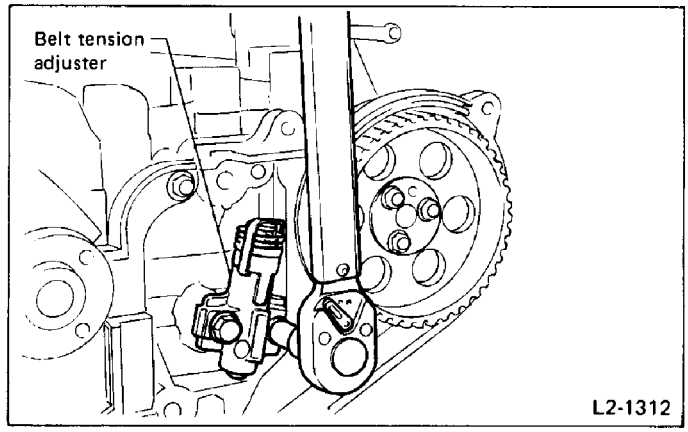

Fig. 146

4) Install plug rubber.

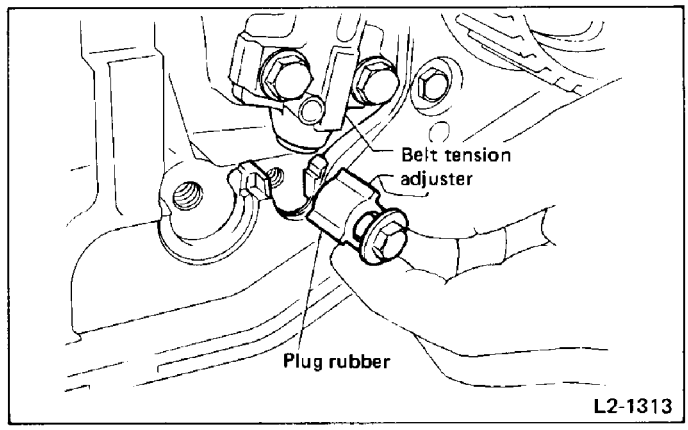

Fig. 147

5) Install idler pulley.

Tightening torque:
39 – 47 N·m (4.0 – 4.8 kg-m, 29 – 35 ft-lb)

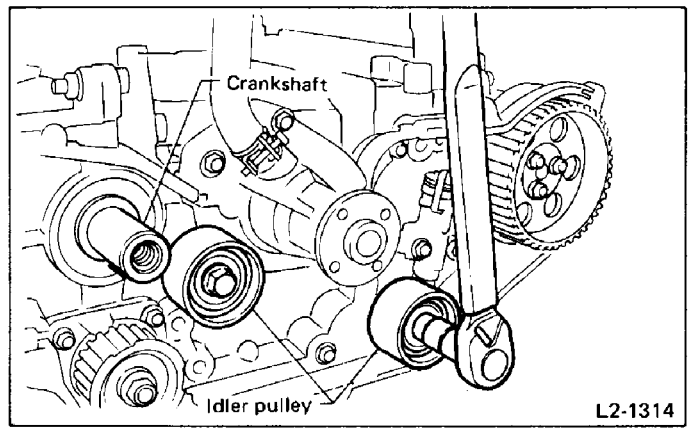

Fig. 148

6) Install crankshaft sprocket No. 2 to crankshaft.

Sprocket No. 2 can be identified by the absence of dowel pin.

7) Install timing belt LH.
(1) Align the center of three lines scribed on flywheel with timing mark on flywheel housing.

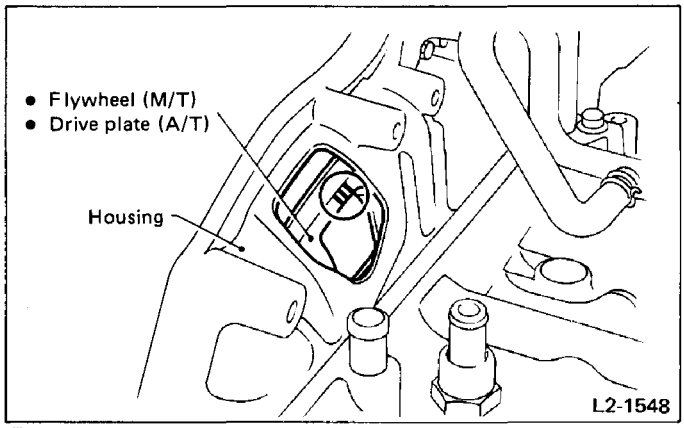

Fig. 149

(2) Align timing mark on camshaft sprocket LH with notch in belt cover.

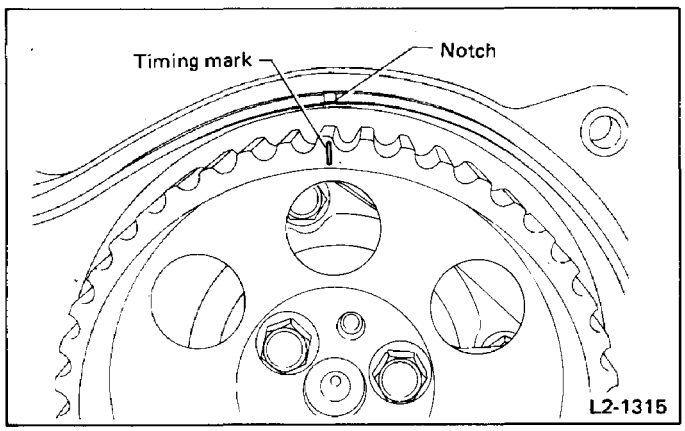

Fig. 150

(3) Install timing belt from the crankshaft side. Be careful not to loosen it.

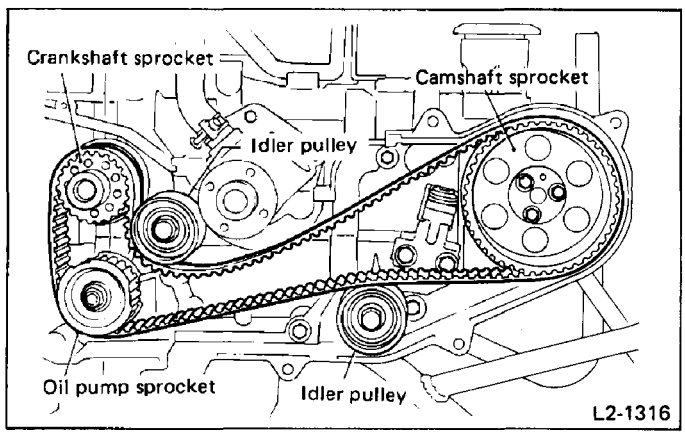

Fig. 151

(4) Install left tensioner. Check that it moves smoothly after installation.

Tightening torque:
39 – 47 N·m (4.0 – 4.8 kg-m, 29 – 35 ft-lb)

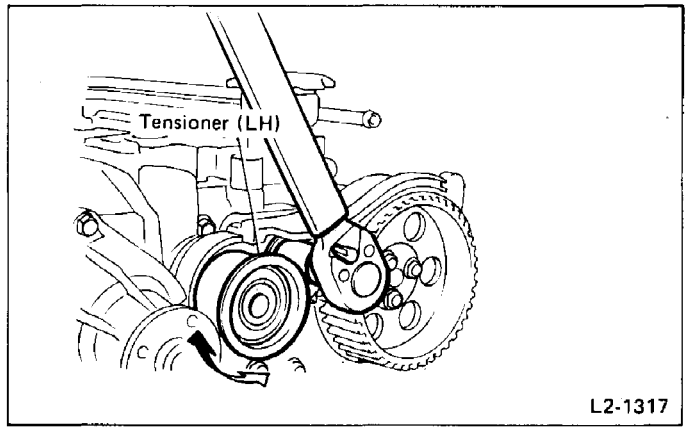

Fig. 152

(5) Remove BELT ADJUSTER STOPPER from belt tension adjuster.

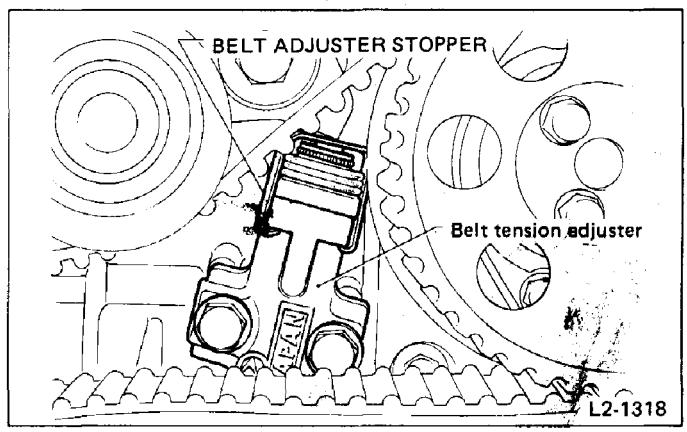

Fig. 153

a. Check that the end of left tensioner arm contacts top of belt tension adjuster.
b. Make sure that flywheel timing mark and camshaft sprocket LH timing mark are in their normal positions.

8) Install timing belt RH.
(1) Turn crankshaft one turn clockwise from the position where timing belt LH was installed and align the center of three lines scribed on the flywheel with timing mark on flywheel housing.
(2) Align timing mark on camshaft sprocket RH with the notch in belt cover.

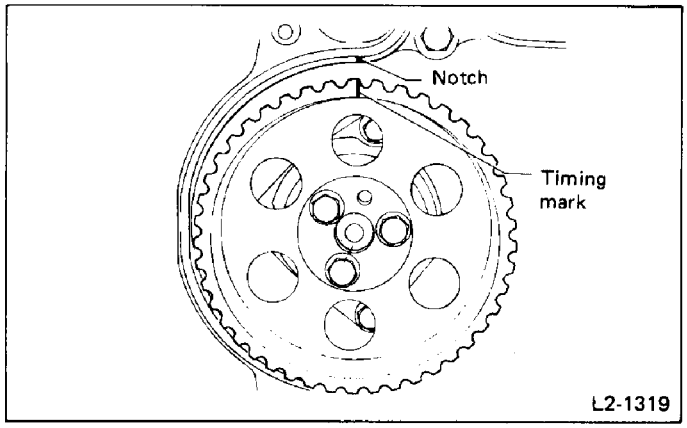

Fig. 154

(3) Temporarily tighten bolts ⓐ and ⓑ while moving the right tensioner down in the direction of the arrow. Loosen bolt ⓐ 180°.

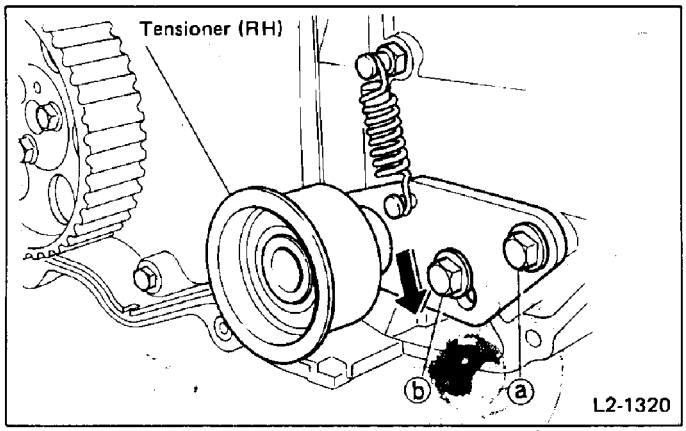

Fig. 155

(4) Install crankshaft sprocket to crankshaft.

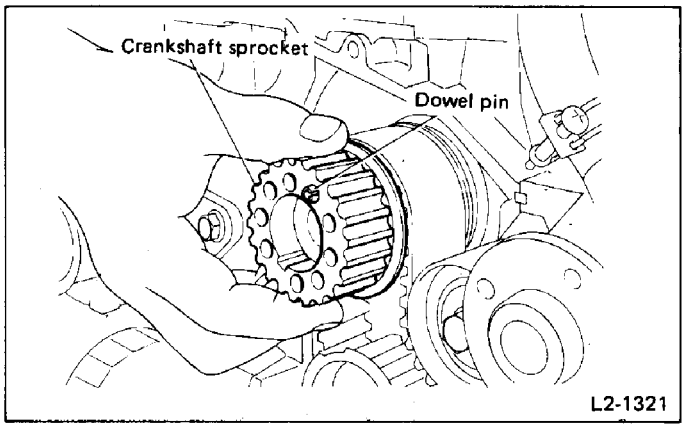

Fig. 156

(5) Install timing belt from the crankshaft side. Be careful not to loosen it.

(6) Loosen tensioner RH tightening bolt ⓑ by 1/2 turn to apply tension to belt.

(7) Apply the specified torque to camshaft sprocket RH in counterclockwise direction using BELT TENSION WRENCH (499437100). While applying torque, tighten tensioner RH tightening bolt ⓑ temporarily, then tighten bolt ⓐ temporarily.

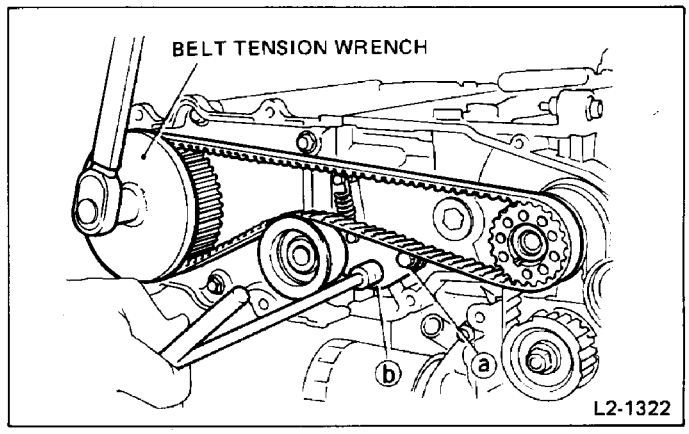

Fig. 157

When torquing sprocket, be extremely careful not to apply excessive force to it. Excessive belt tension will greatly reduce belt life.

Belt tension	Torque to cam sprocket
147 – 245 N (15 – 25 kg, 33 – 55 lb)	24 – 25 N·m (2.4 – 2.6 kg-m, 17 – 19 ft-lb)

(8) Tighten bolt ⓑ and bolt ⓐ, in that order, to the specified torque.

Tightening torque:
23 – 26 N·m (2.3 – 2.7 kg-m, 17 – 20 ft-lb)

Make sure that flywheel timing mark and camshaft sprocket RH timing mark are in their normal positions.

9) Install belt cover CTR.

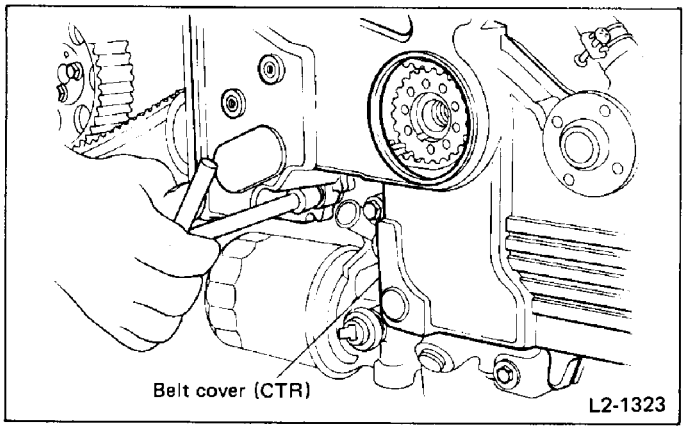

Fig. 158

10) Install crankshaft pulley to crankshaft using FLYWHEEL STOPPER (498277000) [manual transmission model] or DRIVE PLATE STOPPER (498497000) [automatic transmission model] to lock crankshaft.

When tightening bolt, apply engine oil to the threads, then tighten.

Tightening torque:
89 – 107 N·m (9.1 – 10.9 kg-m, 66 – 79 ft-lb)

11) Install oil level gauge guide.

Tightening torque:
4.4 – 5.4 N·m (0.45 – 0.55 kg-m, 3.3 – 4.0 ft-lb)

12) Install water pipe. Apply coolant to O-ring beforehand.
13) Install water pump pulley to water pump ASSY, and tighten nuts temporarily.
14) Install belt covers RH and LH.
15) Install compressor (A/C).
16) Install alternator.

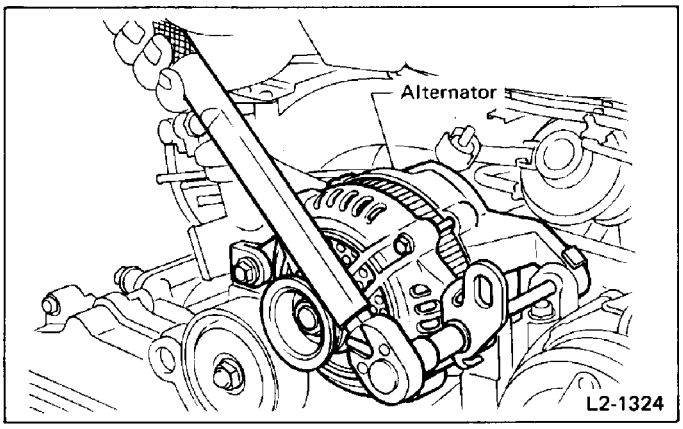

Fig. 159

17) Install V-belt and apply proper tension to the belt.
(1) Loosen belt tension pulley lock nut.
(2) Turn adjusting bolt to adjust belt tension.
The belt tightens when the bolt is turned clockwise and vice versa.

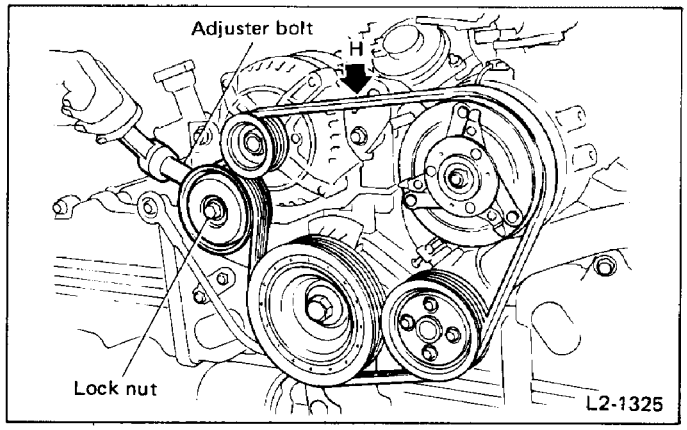

Fig. 160

	H: mm (in) / 98 N (10 kg, 22 lb)	Tension: N (kg, lb)
New belt	5.5 – 6.5 (0.217 – 0.256)	637 – 736 (65 – 75, 143 – 165)
Existing belt	6.5 – 7.5 (0.256 – 0.295)	441 – 637 (45 – 65, 99 – 143)

(3) Tighten lock nut.

Tightening torque:
34 – 44 N·m (3.5 – 4.5 kg-m, 25 – 33 ft-lb)

(4) After adjusting belt tension, turn adjusting bolt counterclockwise to lock.

Tightening torque:
4 – 6 N·m (0.4 – 0.6 kg-m, 2.9 – 4.3 ft-lb)

When replacing belt with a new one, adjust its tension to the specification, then readjust it to the same specification after running engine for 5 minutes in consideration of its initial expansion.

18) Tighten water pump pulley mounting bolts.

Camshaft and Valve Rocker

REMOVAL

1) Removing distributor
   (1) Disconnect high-tension cords from spark plug.
   (2) Remove distributor by removing mounting bolts.
2) Remove timing belt, belt cover and related parts. (Refer to "Timing Belt and Belt Cover".)
3) Remove water pipe.
4) Remove PCV hoses from rocker cover.
5) Remove valve rocker covers.
6) Remove camshaft cases, camshaft support, and camshaft as a unit.

When removing camshaft case, valve rockers may come off. To prevent them from being damaged, be sure to place waste cloth or rubber mat under cylinder head.

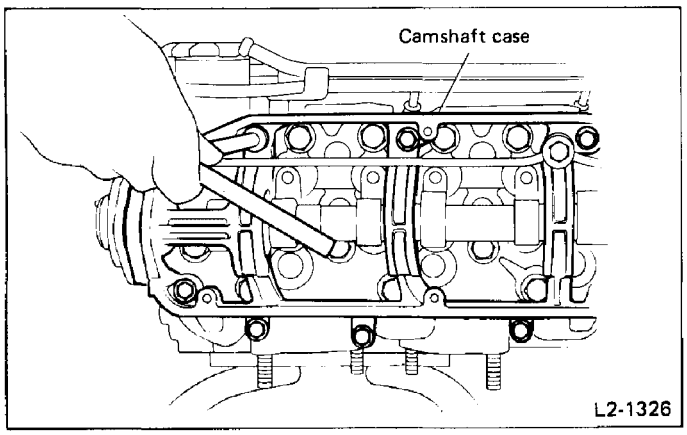

Fig. 161

7) Remove valve lash adjusters from cylinder head.

a. Do not lay down removed adjusters; keep them erect.
b. Retain removed valve rockers and adjusters in the order of their removal so that they can be reinstalled correctly.

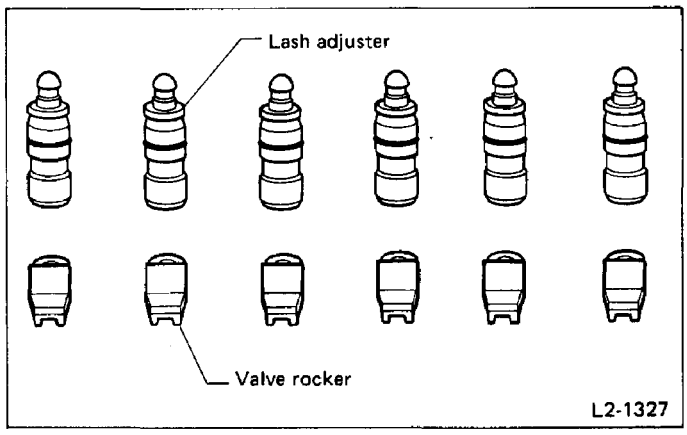

Fig. 162

DISASSEMBLY

1) Remove camshaft support.
2) Remove camshaft.

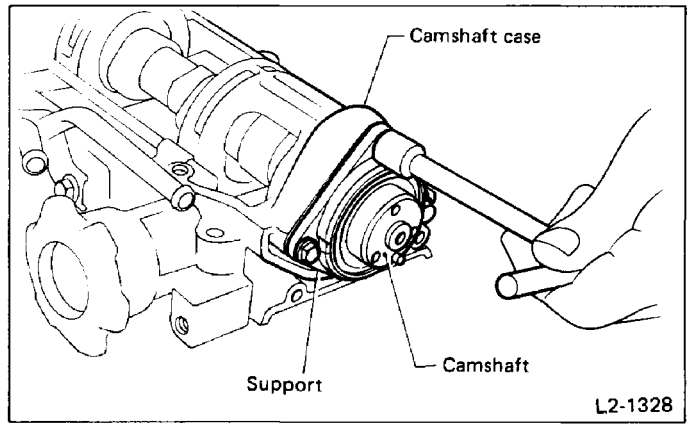

Fig. 163

3) Remove oil relief plug, then remove oil relief pipe, relief valve spring, and relief valve.

INSPECTION

CAMSHAFT

1) Measure the bend, and repair or replace if necessary.

Limit:
0.025 mm (0.0010 in)

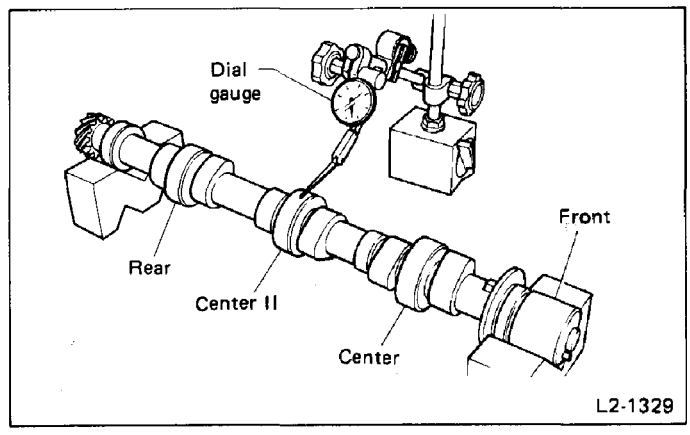

Fig. 164

2) Check journal for damage and wear. Replace if faulty.

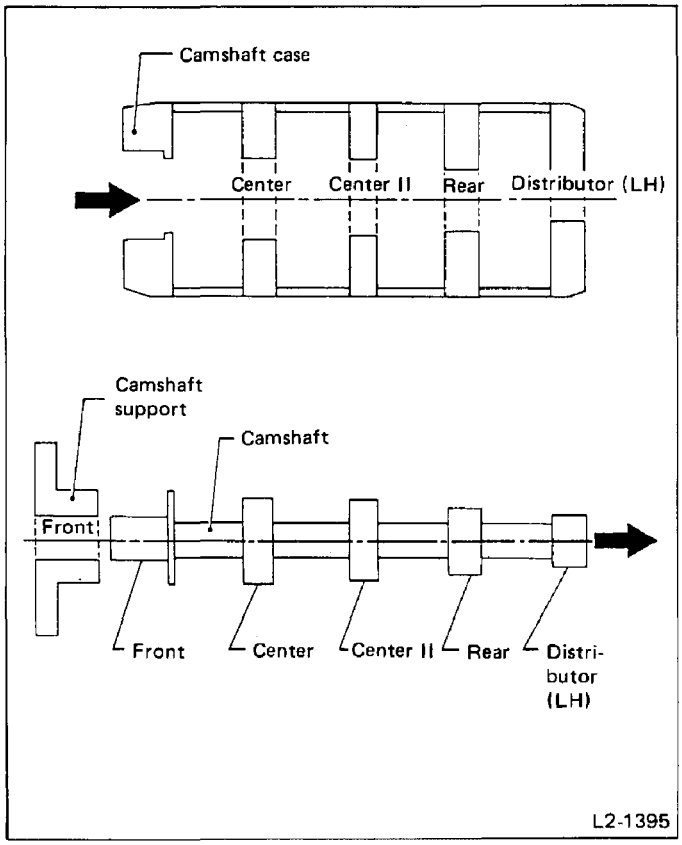

Fig. 165

Item		Front	Center	Center II	Rear	Distributor LH
Cam case journal hole I.D.		38.000 – 38.018 mm*1 (1.4961 – 1.4968 in)	48.500 – 48.525 mm (1.9094 – 1.9104 in)	48.000 – 48.025 mm (1.8898 – 1.8907 in)	47.500 – 47.525 mm (1.8701 – 1.8711 in)	39.000 – 39.013 mm (1.5354 – 1.5359 in)
Camshaft journal O.D.		37.964 – 37.980 mm (1.4946 – 1.4953 in)	48.464 – 48.480 mm (1.9080 – 1.9087 in)	47.964 – 47.980 mm (1.8883 – 1.8890 in)	47.464 – 47.480 mm (1.8687 – 1.8693 in)	38.964 – 38.980 mm (1.5340 – 1.5346 in)
Clearance at journal	Standard	0.020 – 0.054 mm (0.0008 – 0.0021 in)				
	Limit	0.070 mm (0.0028 in)				

*1: Camshaft support I.D.

3) Measure thrust clearance between camshaft and camshaft support. If the limit is exceeded, replace camshaft support.

Thrust clearance:
Standard
0.03 – 0.26 mm (0.0012 – 0.0102 in)
Limit
0.35 mm (0.0138 in)

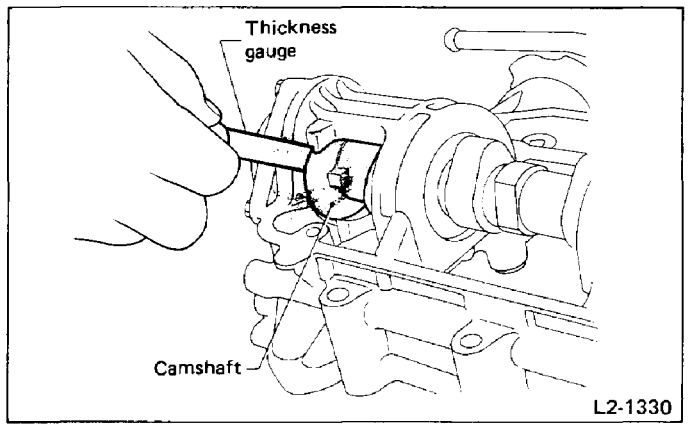

Fig. 166

4) Check cam face condition; remove minor faults by grinding with oil stone. Measure the cam height H; replace if the limit has been exceeded.

Height H mm (in)	Wear limit mm (in)
39.69 ± 0.05 (1.5626 ± 0.0020)	39.49 (1.5547)

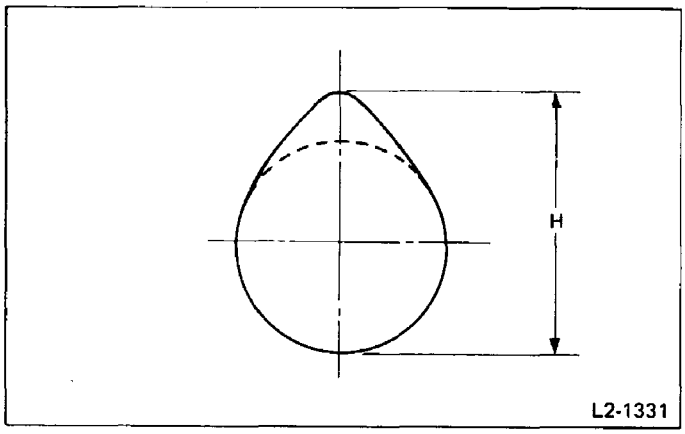

Fig. 167

5) Measure backlash between distributor drive gear and distributor driven gear. If the limit is exceeded, replace distributor drive gear.

a. Measure backlash after assembling the engine because camshaft must be prevented from turning.
b. Attach a dial gauge to distributor driven gear rotate rotor to measure backlash.

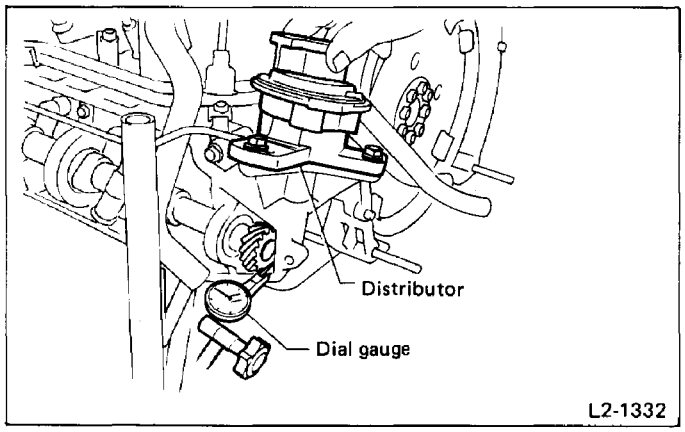

Fig. 168

Backlash:
Standard
0.015 – 0.126 mm (0.0006 – 0.0050 in)
Limit
0.180 mm (0.0071 in)

6) Replace gear using a press and CAMSHAFT HOLDER (498027000).

VALVE ROCKER

If cam or valve contact surface of valve rocker is worn or dented, repair by removing the minimum necessary amount. If worn heavily, replace valve rocker.

VALVE LASH ADJUSTER

Stand adjuster vertically. Push pivot portion forcefully to check that no air is in the adjuster.

The new adjuster is provided with a pin which must be removed before using.

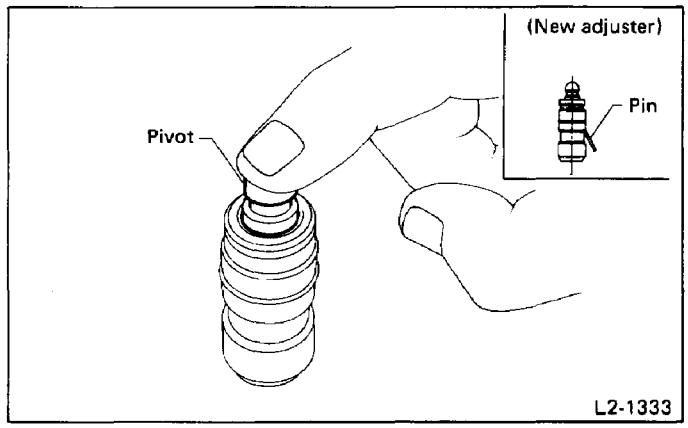

Fig. 169

ASSEMBLY

1) Press-fit oil seal into camshaft support by using INSTALLER (498037000), then attach O-ring.
Apply oil to O-ring beforehand.
2) Install oil relief valve, relief valve spring, oil relief pipe, and oil relief plug to camshaft case.

Tightening torque:
23 – 26 N·m (2.3 – 2.7 kg-m, 17 – 20 ft-lb)

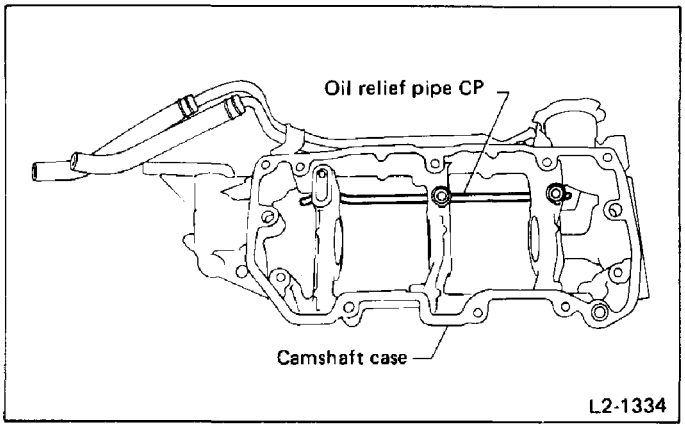

Fig. 170

3) Install woodruff key to camshaft, then press-fit distributor drive gear by using CAMSHAFT HOLDER (498027000) and PRESS (899754112).

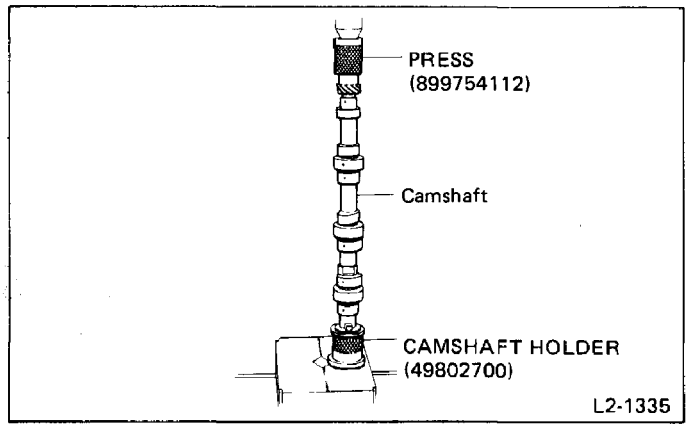

Fig. 171

4) Insert camshaft into camshaft case, and install camshaft support.

Tightening torque:
5.9 – 6.9 N·m (0.60 – 0.70 kg-m, 4.3 – 5.1 ft-lb)

Apply oil to the surfaces of camshaft case journal hole, camshaft journal hole and camshaft support oil seal lip.

INSTALLATION

1) Insert valve lash adjusters into cylinder head.

Be sure to insert each valve lash adjuster to its original position.

2) Apply grease to spherical surface and sliding surface of each valve rocker, then secure valve rockers to the respective valve adjusters and valves.

Be sure to apply grease; otherwise, valve rocker will drop off.

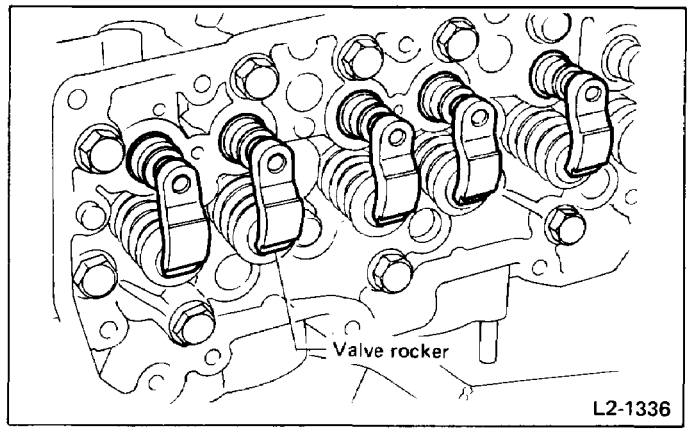

Fig. 172

3) Apply fluid packing (Three-bond 1207B or equivalent) to groove of each camshaft case, then install to cylinder head.

Tightening torque:
23 – 26 N·m (2.3 – 2.7 kg-m, 17 – 20 ft-lb)

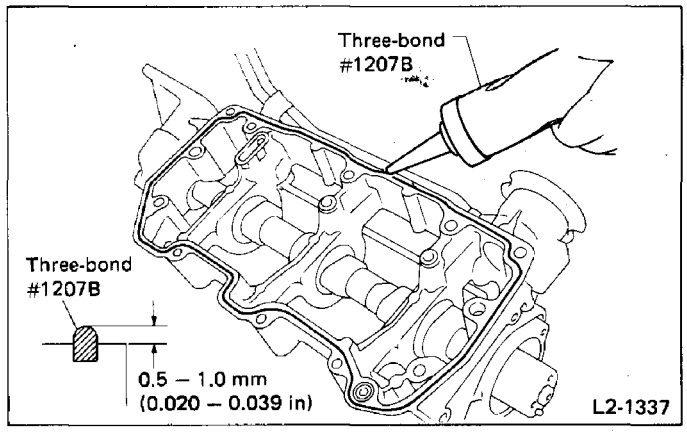

Fig. 173

After installing, abundantly apply engine oil to sliding surfaces of cam and valve rocker.

4) Attach gaskets to valve rocker covers, and install the covers to camshaft cases with rocker cover washers and bolts.
5) Install PCV hoses.
6) Install timing belt, belt cover and related parts.
(Refer to "Timing Belt and Belt Cover".)
7) Install oil filler duct.
8) Install water pipe.
9) Install distributor, proceeding as follows:
(1) Bring #1 cylinder piston to its top dead center on compression stroke. Set camshaft sprocket to the position shown in Figure.

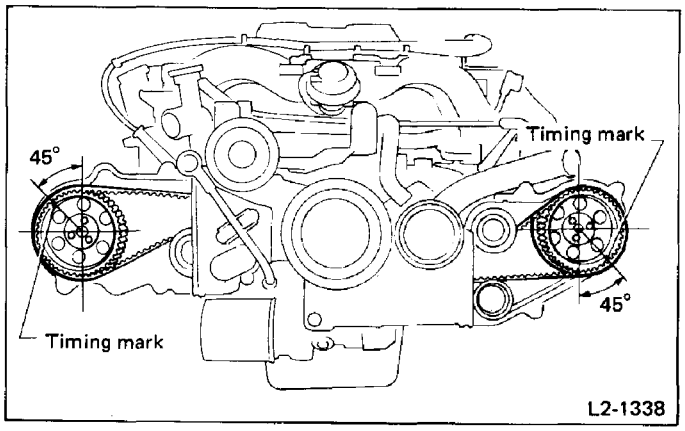

Fig. 174

(2) Align distributor housing match mark with pinion gear match mark to set #1 cylinder at igniting position.

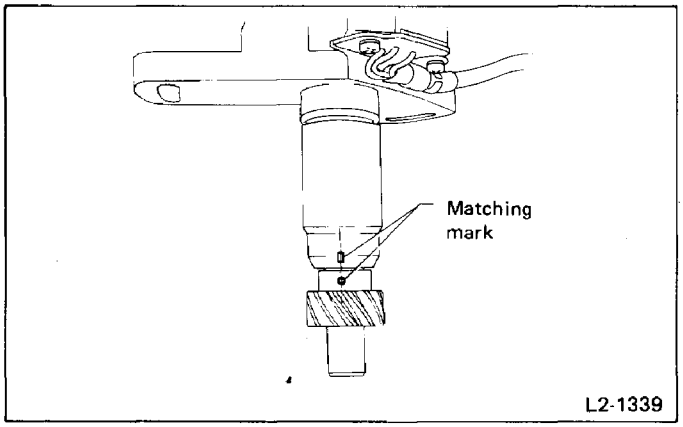

Fig. 175

(3) Install distributor to camshaft case.
(4) Connect lead wires.
(5) Install plug cord and high-tension cord.

11) Install right and left belt covers.

Cylinder Head

REMOVAL

1) Remove timing belt, belt cover and related parts. (Refer to "Timing Belt and Belt Cover".)
2) Remove camshaft cases, lash adjuster and related parts. (Refer to "Camshaft and Valve Rocker".)
3) Remove alternator.
4) Remove compressor (A/C).
5) Remove bolts attaching intake manifold to cylinder head, and then lift intake manifold from cylinder head.

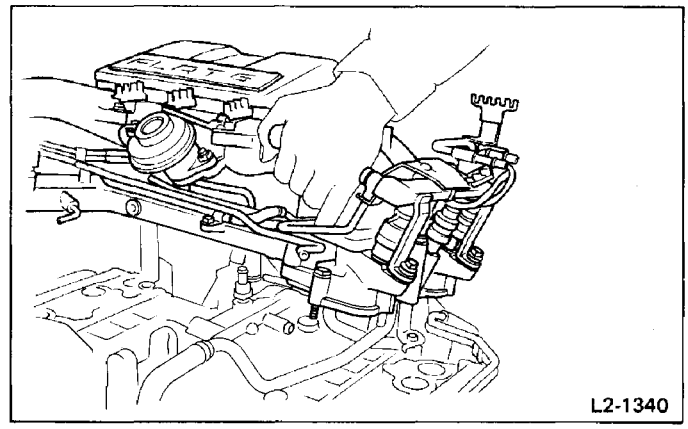

Fig. 176

6) Remove water by-pass pipe to cylinder head.
7) Remove alternator bracket to cylinder head.

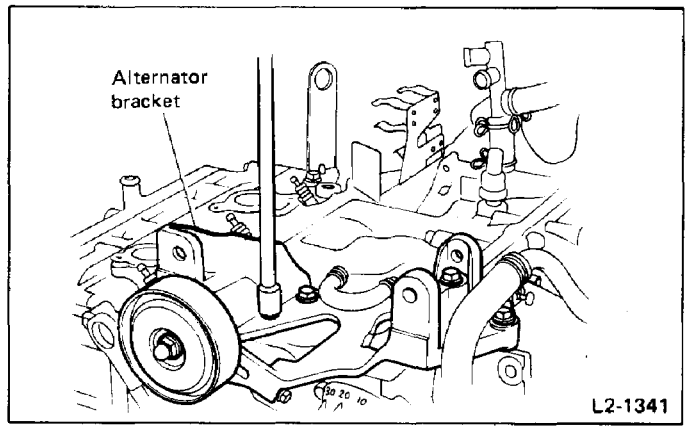

Fig. 177

8) Remove spark plugs.
9) Remove cylinder heads from cylinder block.

Loosen cylinder head bolts in two or three steps, in the order shown in figure below, and remove them.

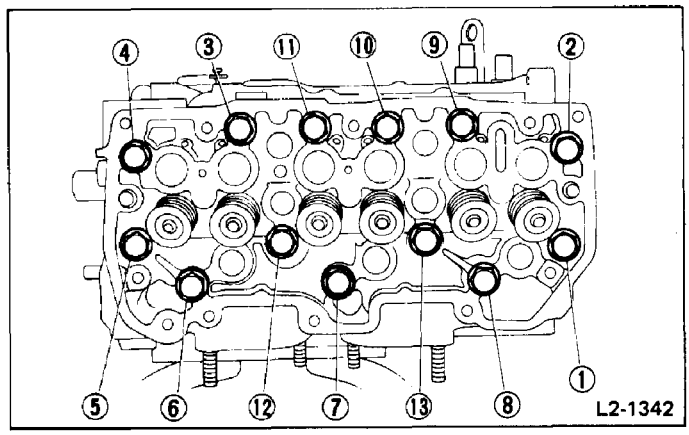

Fig. 178

10) Using VALVE SPRING PRESS ASSY (899724100), compress the valve spring and remove the valve spring retainer key. Remove each valve and valve spring.

Mark each valve to prevent confusion.

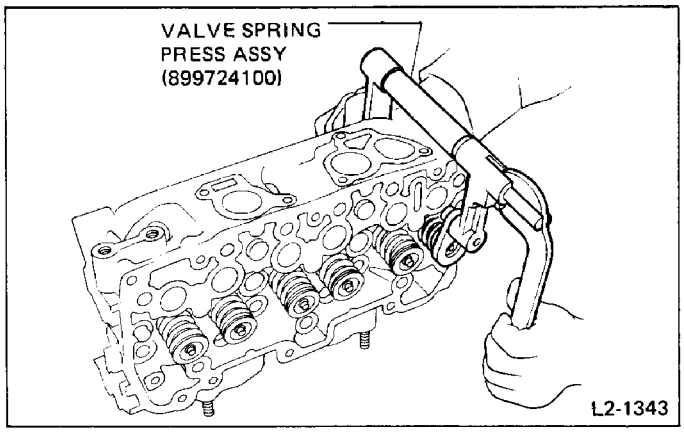

Fig. 179

INSPECTION

CYLINDER HEAD

1) Make sure that no crack or other damage exists. In addition to visual inspection, inspect important areas by means of red check.

2) Measure the warping of the cylinder head surface that mates with cylinder block by using a straight edge and thickness gauge.

If the warping exceeds 0.075 mm (0.0030 in), regrind the surface with a surface grinder.

Warping limit:
0.075 mm (0.0030 in)
Grinding limit:
0.3 mm (0.012 in)

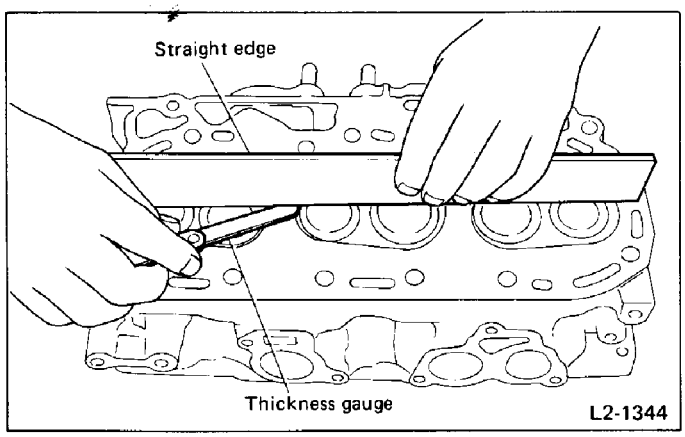

Fig. 180

3) Inspect intake and exhaust valve seats, and correct the contact surfaces with valve seat cutter if they are defective or when valve guides are replaced.

W (contacting width):
Intake
1.2 – 1.8 mm (0.047 – 0.071 in)
Exhaust
1.5 – 2.0 mm (0.059 – 0.079 in)
Wear limit of valve seat (measured in direction of valve axis):
0.5 mm (0.020 in) for both intake and exhaust valves

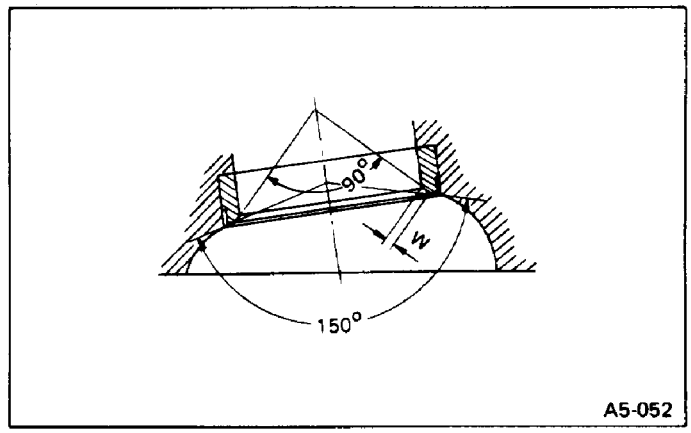

Fig. 181

VALVE GUIDE

1) Check the clearance between valve guide and stem. The clearance can be checked by measuring the outside diameter of valve stem and the inside diameter of valve guide with outside and inside micrometers respectively.

Specifications for valve stem and valve guide		
Standard clearance between valve guide and valve stem	Intake	0.035 – 0.065 mm (0.0014 – 0.0026 in)
	Exhaust	0.040 – 0.070 mm (0.0016 – 0.0028 in)
Limit of clearance between valve guide and valve stem		0.15 mm (0.0059 in)
Standard inside diameter of valve guide		7.000 – 7.015 mm (0.2756 – 0.2762 in)
Standard diameter of valve stem	Intake	6.950 – 6.965 mm (0.2736 – 0.2742 in)
	Exhaust	6.945 – 6.960 mm (0.2734 – 0.2740 in)

2) If the clearance between valve guide and stem exceeds the specification, replace guide as follows:

(1) Place cylinder head on CYLINDER HEAD TABLE with the combustion chamber upward so that valve guides enter the holes in CYLINDER HEAD TABLE.

(2) Insert VALVE GUIDE REMOVER into valve guide and press it down to remove valve guide.

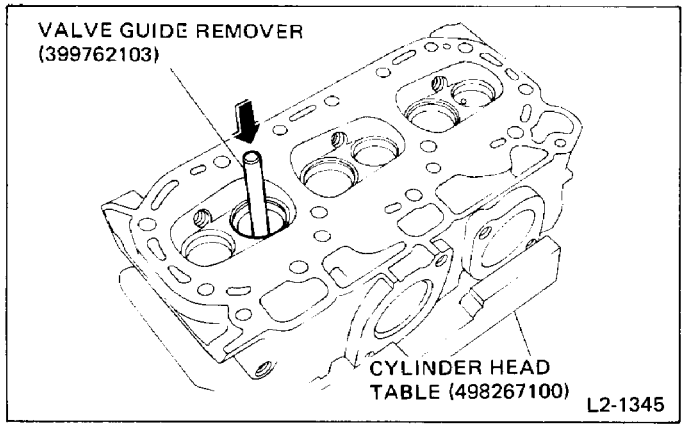

Fig. 182

(3) Turn cylinder head upside down and place VALVE GUIDE ADJUSTER as shown in the figure.

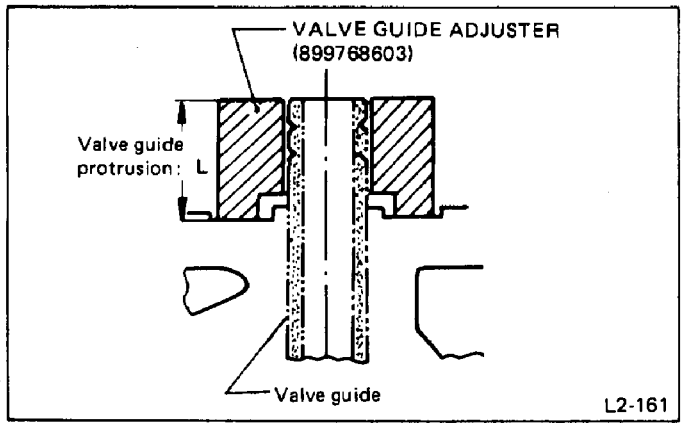

Fig. 183

(4) Before installing new valve guide, make sure that neither scratches nor damages exist on the inside surface of the valve guide holes in cylinder head.

(5) Put new valve guide, coated with sufficient oil, in cylinder, and insert VALVE GUIDE REMOVER into valve guide. Press in until the valve guide upper end is flush with the upper surface of VALVE GUIDE ADJUSTER.

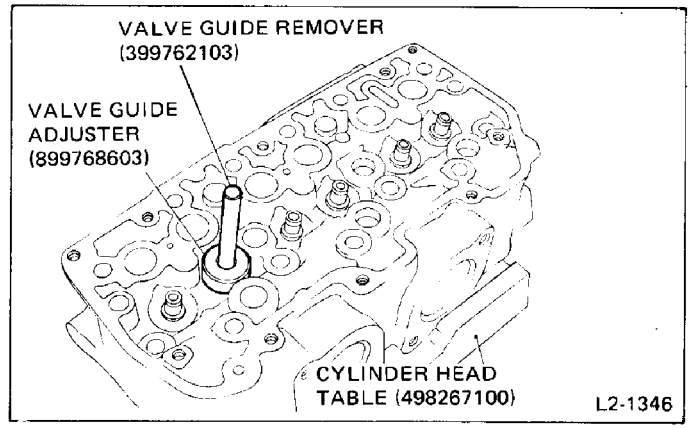

Fig. 184

(6) Check the valve guide protrusion.

Valve guide protrusion: L
17 – 18 mm (0.67 – 0.71 in)

(7) Ream the inside of valve guide with VALVE GUIDE REAMER (399762104). Gently rotate the reamer clockwise while pressing it lightly into valve guide, and return it also rotating clockwise. After reaming, clean valve guide to remove chips.

a. Apply engine oil to the reamer when reaming.
b. If the inner surface of the valve guide is torn, the edge of the reamer should be slightly ground with an oil stone.
c. If the inner surface of the valve guide becomes lustrous and the reamer does not cut chips, use a new reamer or remedy the reamer.

(8) Recheck the contact condition between valve and valve seat after replacing valve guide.

INTAKE AND EXHAUST VALVE OIL SEAL

Replace oil seal with new one, if lip is damaged or spring is out of place, or when the surfaces of intake valve and valve seat are reconditioned or intake valve guide is replaced.

Press in oil seal to the specified dimension indicated in the figure, using OIL SEAL INSTALLER.

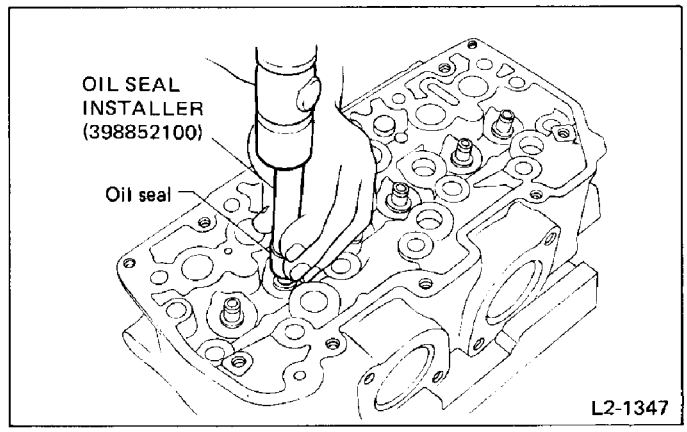

Fig. 185

a. Apply engine oil to oil seal before force-fitting.
b. Differentiate between intake valve oil seal and exhaust valve oil seal by noting their difference in height.

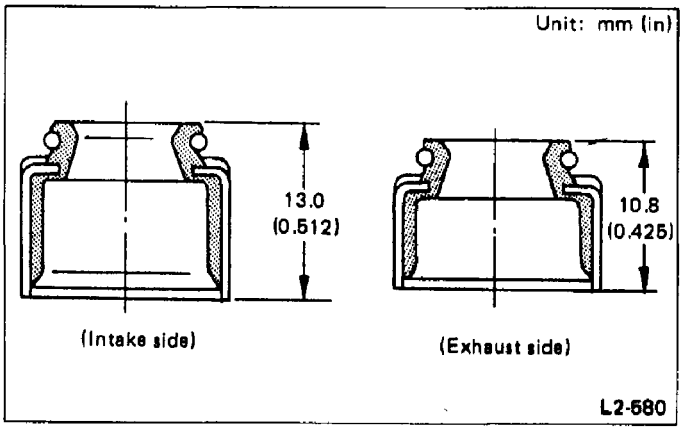

Fig. 186

INSTALLATION

1) Install the oil seals to the valve guides using OIL SEAL INSTALLER (398852100).
2) Coat the stem of each valve with engine oil and insert the valve into the valve guide. Attach the valve springs and retainer. Then compress the valve springs using VALVE SPRING PRESS and fit the valve spring retainer key.

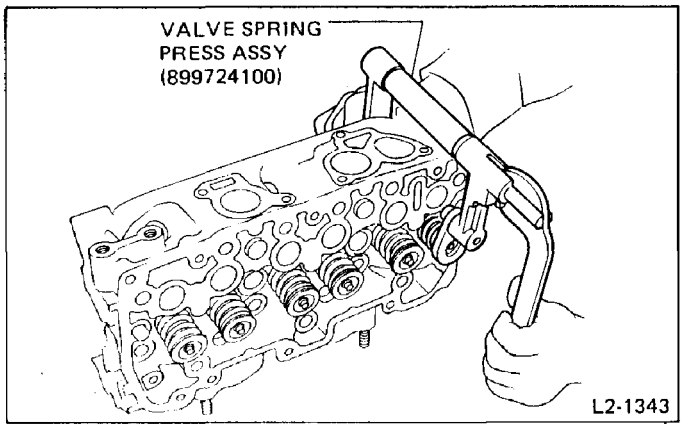

Fig. 187

After installing, tap the valve spring retainers lightly with a wooden hammer for better seating.

3) Install cylinder heads to cylinder block with new gaskets.

a. When tightening bolts, apply oil to the threads.
b. Be sure to install washers with their convex/chamfered sides facing bolt heads.

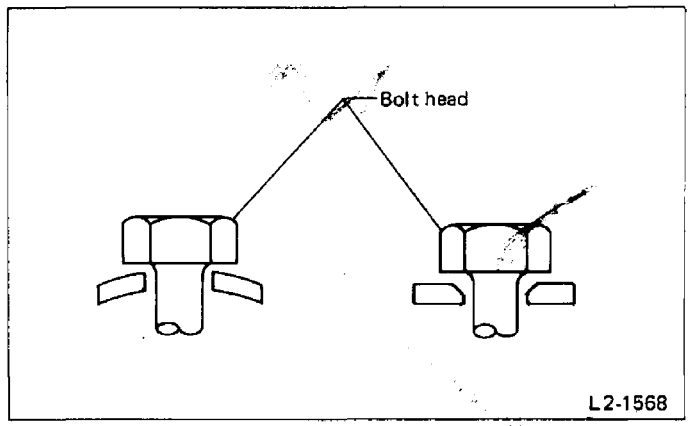

Fig. 188-①

c. Be careful as there are two types of bolts.

Bolt position	Color	Bolt length
①, ②, ⑨, ⑬	Silver	118.5 mm (4.665 in)
Others	Yellow	132.5 mm (5.217 in)

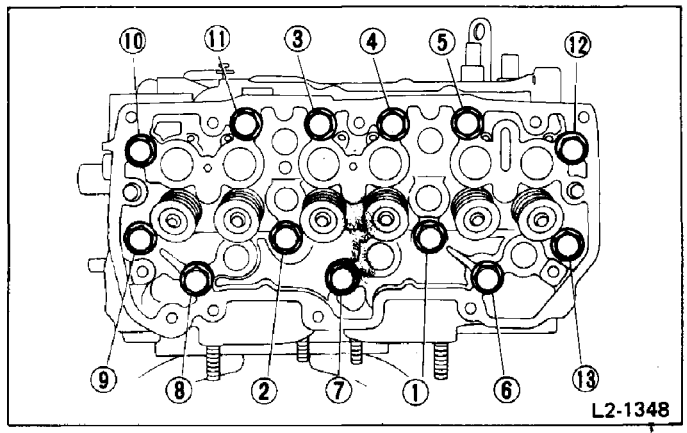

Fig. 188-②

(1) Tighten all bolts in two steps in the order indicated above:

1st step: 39 N·m (4.0 kg-m, 29 ft-lb)
2nd step: 64 N·m (6.5 kg-m, 47 ft-lb)

(2) Loosen all bolts at least 90° in reverse order.
(3) Tighten all bolts to specified torque.

Tightening torque:
60 – 68 N·m (6.1 – 6.9 kg-m, 44 – 50 ft-lb)

4) Install spark plugs.
5) Install bolt attaching water by-pass pipe bracket to cylinder head.
6) Install bolts attaching intake manifold to cylinder head.
7) Install bolts attaching alternator bracket to cylinder head.

8) Install camshaft cases, lash adjustor and related parts. (Refer to "Camshaft and Valve Rocker".)
9) Install timing belt, belt cover and related parts. (Refer to "Timing Belt and Belt Cover".)

After completing engine ASSY and mounting engine on car, be sure to retighten cylinder head bolts. (Refer to "2-2 ON-CAR SERVICES".)

Valve and Valve Springs

REMOVAL

1) Remove cylinder from engine ASSY. (Refer to "Cylinder Head".)
2) Using VALVE SPRING PRESS ASSY, compress the valve spring and remove the valve spring retainer key. Remove each valve and valve spring.

Mark each valve to prevent confusion.

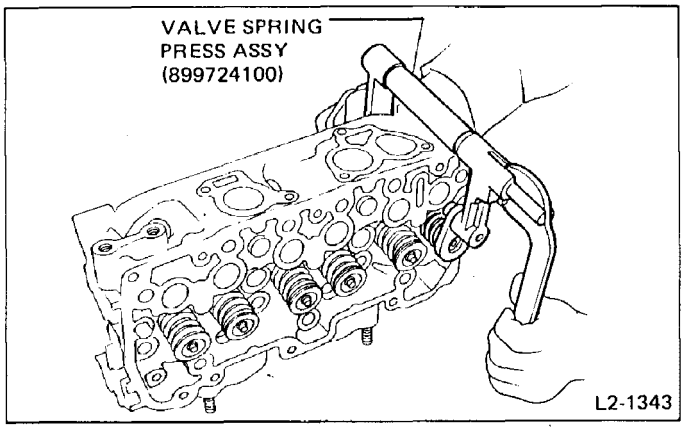

Fig. 189

INSPECTION

INTAKE AND EXHAUST VALVE

1) Inspect the flange and stem of valve, and replace if damaged, worn, or deformed, or if "H" is less than the specified limit.

Valve	H		Overall length
	Standard	Limit	
Intake	1.3 mm (0.051 in)	0.8 mm (0.031 in)	107.58 mm (4.235 in)
Exhaust	1.3 mm (0.051 in)	0.8 mm (0.031 in)	107.58 mm (4.235 in)

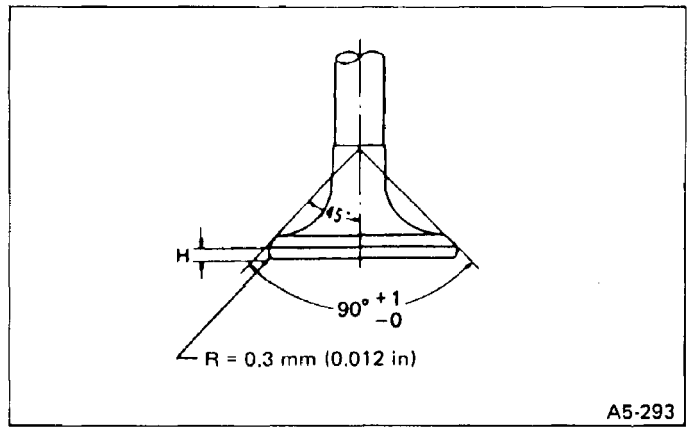

Fig. 190

2) If the contact surface of valve is damaged, or if the stem end is recessed, correct with a valve refacer, grinding as little as possible.

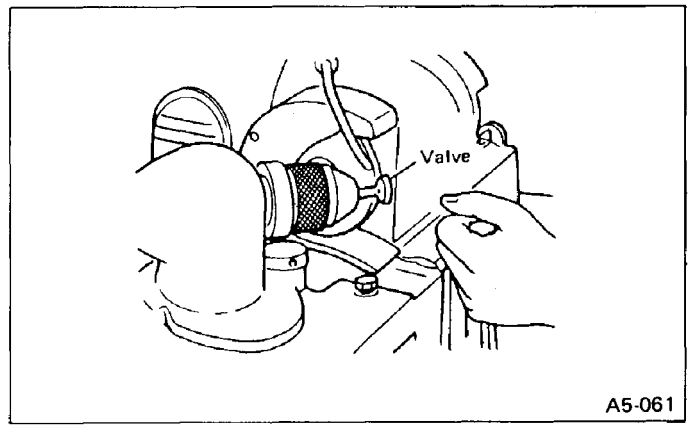

Fig. 191

VALVE SPRINGS

1) Check valve springs for damage, free length, and tension. Replace valve spring if it is not to the specifications presented below.
2) To measure the squareness of the valve spring, stand the spring on a surface plate and measure its deflection at the top using a try square.

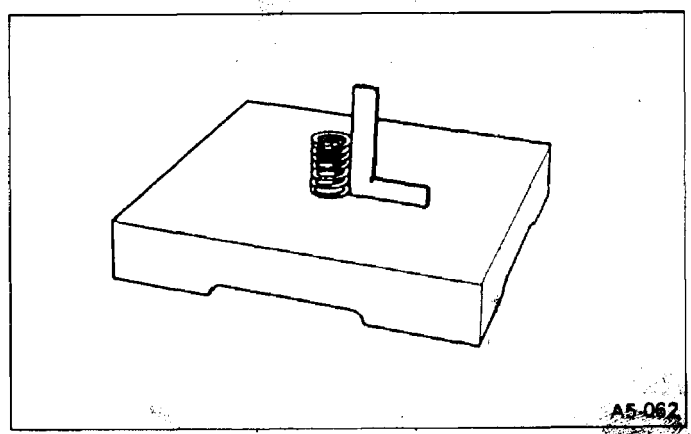

Fig. 192

	Outer spring	Inner spring
Free length	51.7 mm (2.035 in)	50.3 mm (1.980 in)
Tension/ spring height	177.5 – 204.0 N (18.1 – 20.8 kg, 39.9 – 45.9 lb)/ 41.5 mm (1.634 in)	88.3 – 101.0 N (9.0 – 10.3 kg, 19.8 – 22.7 lb)/ 38.5 mm (1.516 in)
	447.2 – 513.9 N (45.6 – 52.4 kg, 100.5 – 115.5 lb)/ 31.5 mm (1.240 in)	201.0 – 230.5 N (20.5 – 23.5 kg, 45.2 – 51.8 lb)/ 28.5 mm (1.122 in)
Squareness	2.3 mm (0.091 in)	2.2 mm (0.087 in)

ASSEMBLY

Coat the stem of each valve with engine oil and insert the valve into the valve guide. Attach the valve springs and retainer. Then compress the valve springs using VALVE SPRING PRESS (899724100) and fit the valve spring retainer key.

After installing, tap the valve spring retainers lightly with a wooden hammer for better seating.

Cylinder Block

REMOVAL

1) Remove distributor and plug cord.

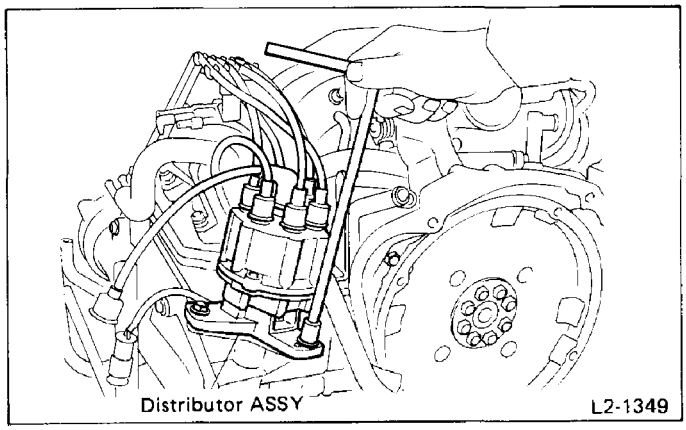

Fig. 193

2) Loosen water pump pulley mounting nuts or bolts.
3) Remove alternator and V-belt.
4) Removal of intake manifold ASSY
   (1) Remove hoses and tubes from cylinder block side.
   (2) Disconnect each harness.
   (3) Disconnect knock sensor harness.
   (4) Remove intake manifold ASSY from engine.

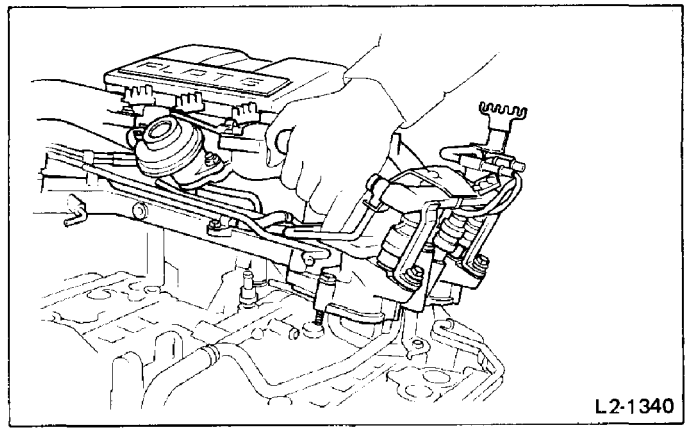

Fig. 194

5) Remove alternator brackets.
6) Remove PCV connector and harness clamp.

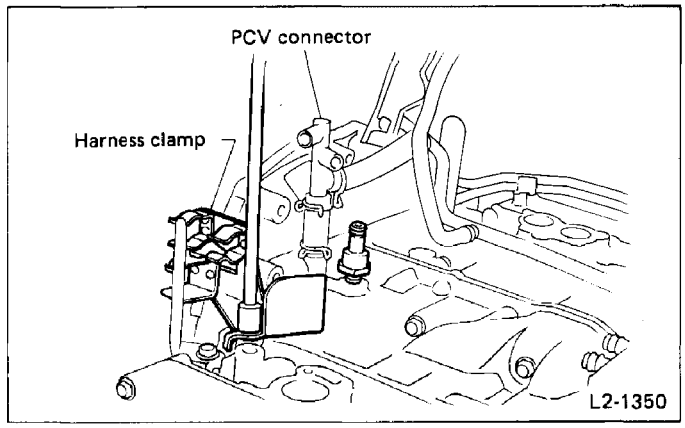

Fig. 195

7) Remove oil filler duct.
8) Remove water pipe.
9) Remove crankshaft pulley. To lock crankshaft, use FLYWHEEL STOPPER (498277000) [manual transmission model] or DRIVE PLATE STOPPER (498497000) [automatic transmission model].
10) Remove water pump pulley and pulley cover.
11) Remove oil level gauge guide together with gauge.
12) Remove timing belt, belt cover and related parts. (Refer to "Timing Belt and Belt Cover".)
13) Remove water pump together with hose.

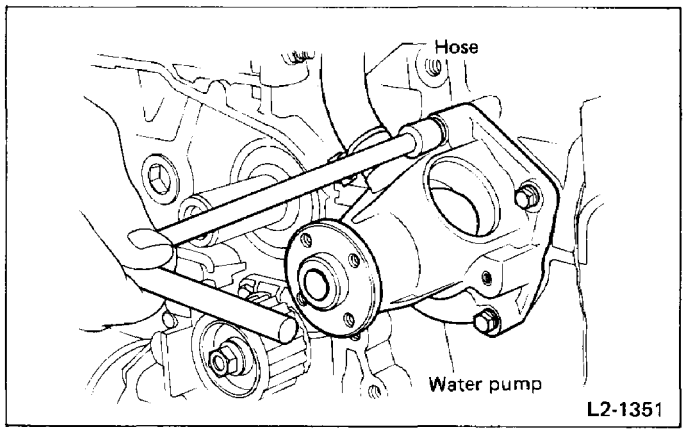

Fig. 196

14) Remove oil pump by aligning notch in oil pump pulley with bolt position, then remove pump outer rotor from cylinder block.

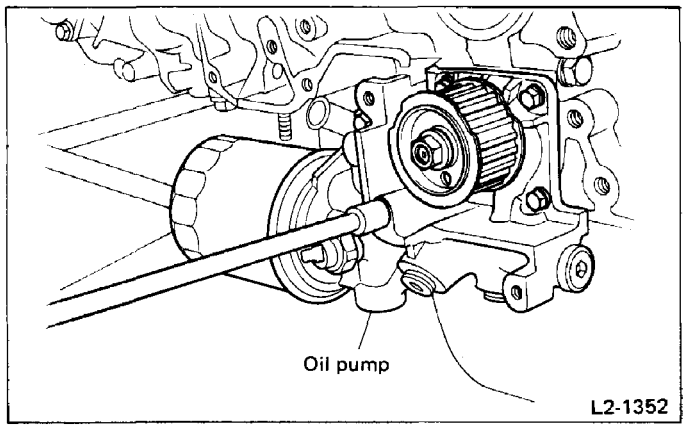

Fig. 197

15) Remove flywheel [manual transmission model] or drive plate [automatic transmission model], and take out flywheel housing with housing cover. To lock crankshaft, use FLYWHEEL STOPPER (498277000) or DRIVE PLATE STOPPER (498497000).

16) Remove flywheel housing.

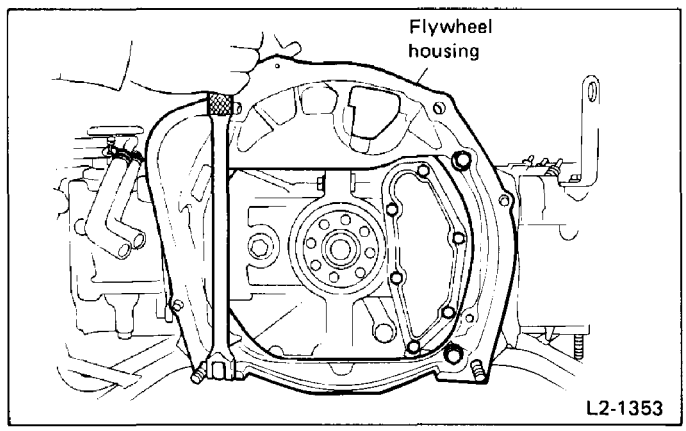

Fig. 198

17) Remove camshaft, valve rocker and related parts. (Refer to "Camshaft and Valve Rocker".)

18) Remove cylinder heads and gaskets.

19) Remove oil pan.

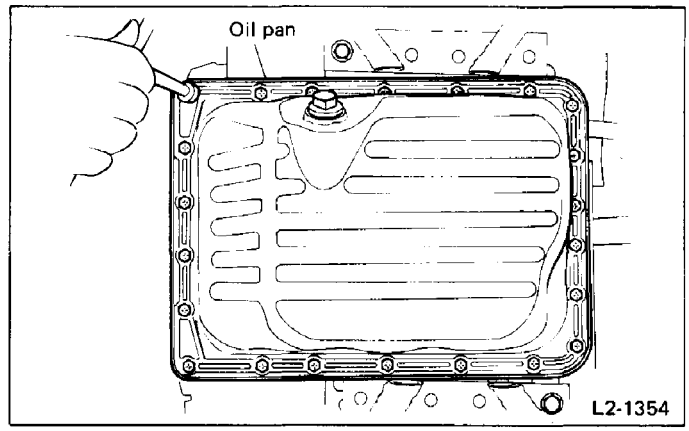

Fig. 199

Do not remove oil strainer from cylinder block.

DISASSEMBLY

1) Remove oil separator cover.

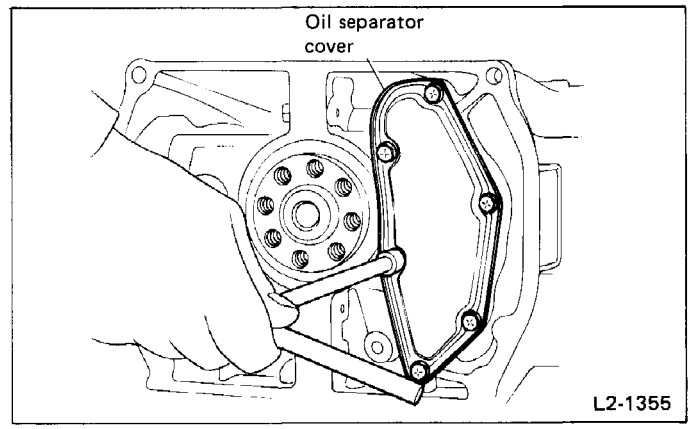

Fig. 200

2) Remove service hole plugs from cylinder block.

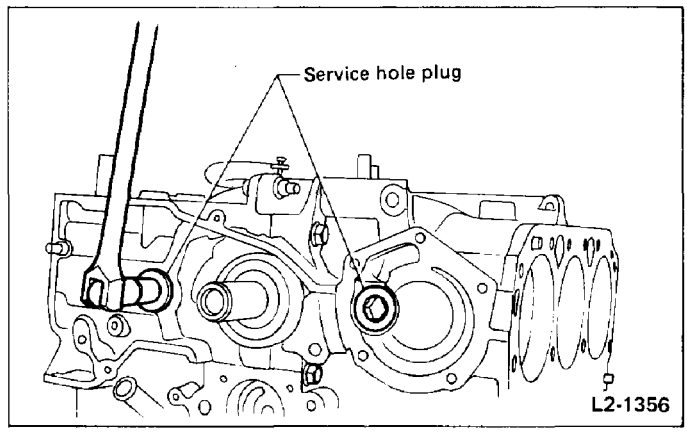

Fig. 201

3) Rotate crankshaft to bring #1 and #2 pistons to BDC position.

To turn crankshaft, turn crankshaft pulley bolt and not the crankshaft pulley.

4) Remove piston circlip through service hole of #1 and #2 cylinders.

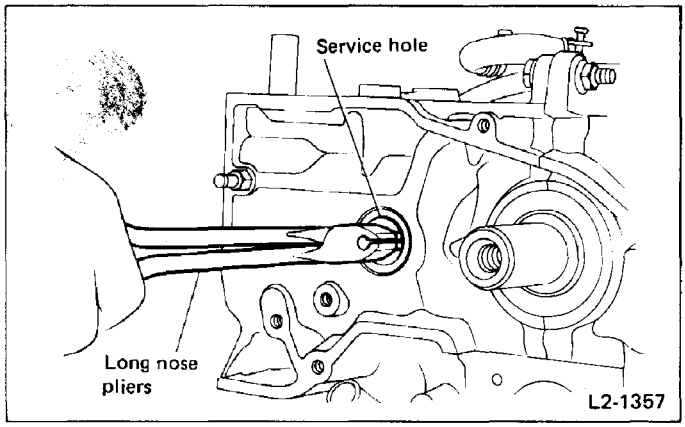

Fig. 202

5) Draw out piston pin from #1 and #2 pistons using PISTON PIN REMOVER.

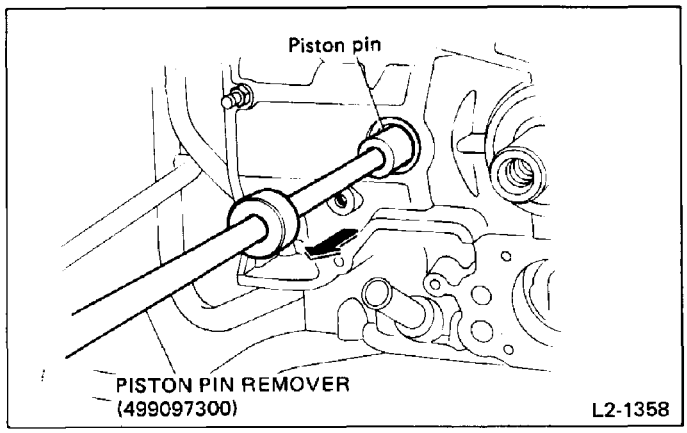

Fig. 203

6) Turn crankshaft and remove #5 & #6 and #3 & #4 in a manner similar to removal of #1 and #2.

7) Remove all cylinder block connecting bolts except one bolt of #3 cylinder.

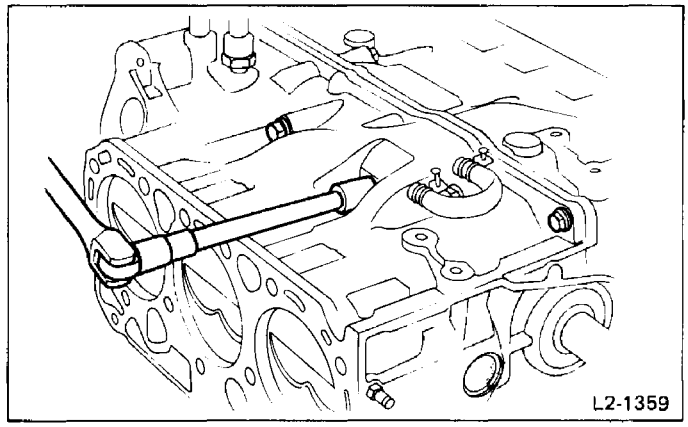

Fig. 204

8) Set up cylinder block so that #1, #3 and #5 cylinders are on the upper side, then separate left-hand and right-hand cylinder blocks.

When separating cylinder block, do not allow the connecting rod to fall and damage the cylinder block.

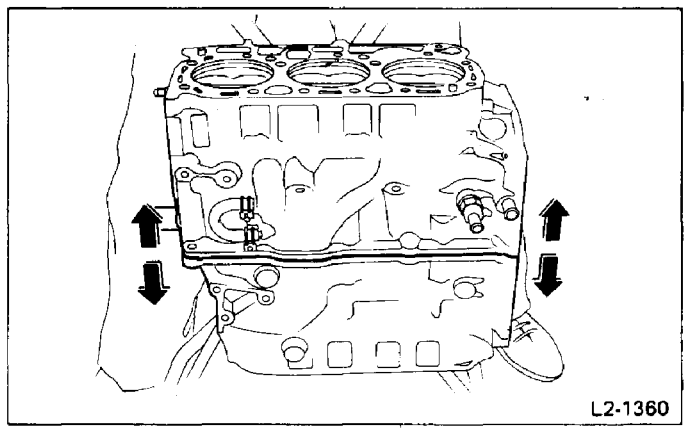

Fig. 205

9) Remove coolant passage O-ring and back-up ring from cylinder block.

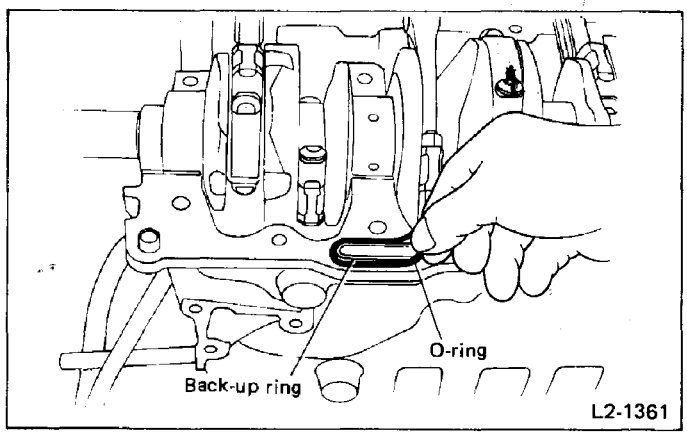

Fig. 206

10) Remove front oil seal and rear oil seal from crankshaft.
11) Remove crankshaft together with connecting rod from cylinder block.

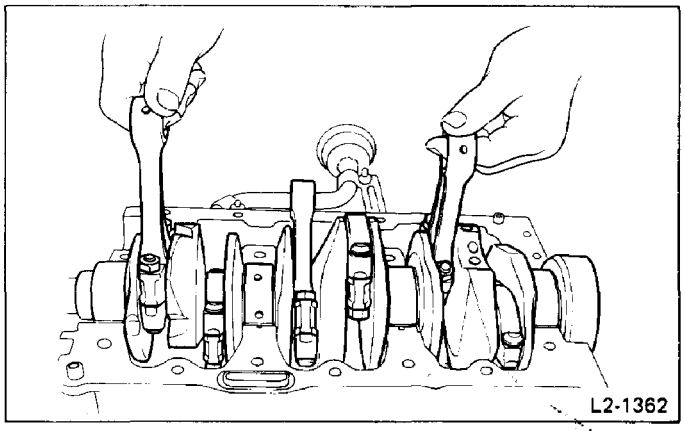

Fig. 207

12) Draw out each piston from cylinder block using wooden bar or hammer handle.

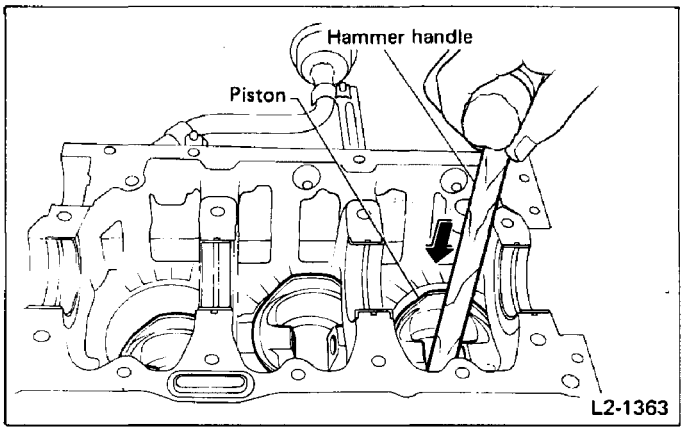

Fig. 208

13) Remove crankshaft bearings from cylinder block using hammer handle.

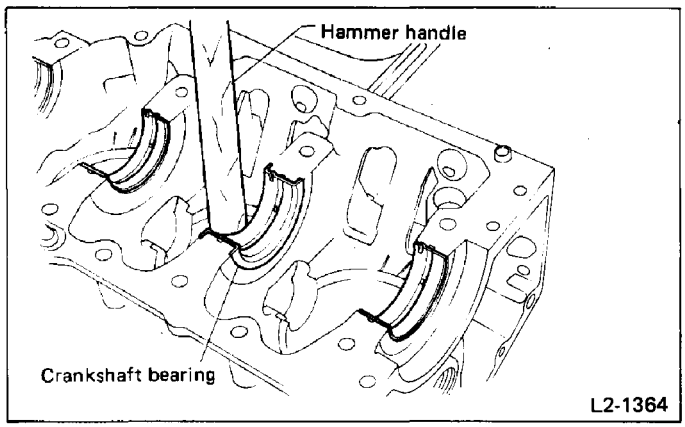

Fig. 209

INSPECTION

CYLINDER BLOCK

Check cylinder block for the following items, and correct or replace if defective.
1) Check for cracks and damage visually. Especially, inspect important parts by means of red check.
2) Check the oil passages for clogging.
3) Inspect the cylinder block surface that mates with cylinder head for warping by using a straight edge, and correct by grinding if necessary.

Warping limit:
0.075 mm (0.0030 in)
Grinding limit:
0.4 mm (0.016 in)

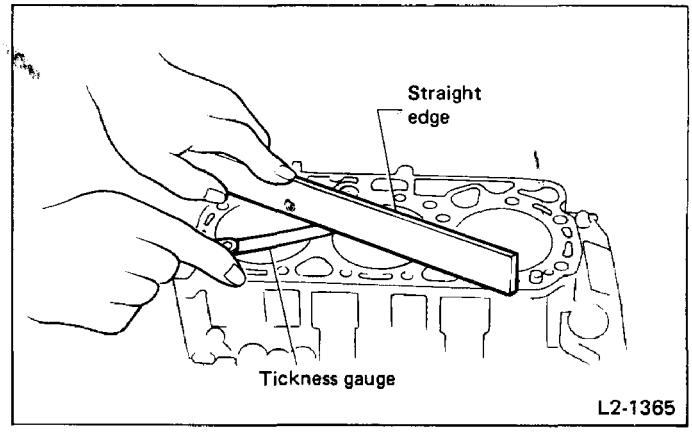

Fig. 210

CYLINDER AND PISTON

1) Measure the inner diameter of each cylinder in both the thrust and piston pin directions at the heights shown in the figure, using a cylinder bore gauge.

Measurement should be performed at a temperature of 20°C (68°F).

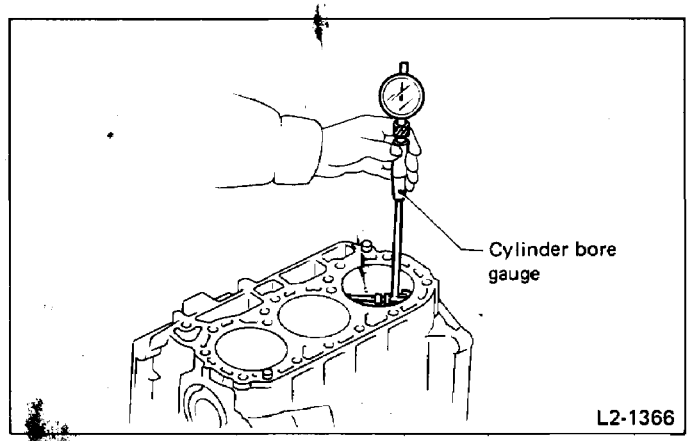

Fig. 211

Cylinder bore		
Standard diameter		91.985 – 92.015 mm (3.6214 – 3.6226 in)
Taper	Limit	0.050 mm (0.0020 in)
Out-of-round	Limit	0.050 mm (0.0020 in)
Cylinder-to-piston clearance at 20°C (68°F)	Standard	0.015 – 0.035 mm (0.0006 – 0.0014 in)
	Limit	0.06 mm (0.0024 in)

2) Boring and honing

(1) If the value of taper, out-of-roundness, or cylinder-to-piston clearance measured exceeds the specified limit or if there is any damage on the cylinder wall, rebore it to use an oversize piston.

When any of the cylinders needs reboring, all other cylinders must be bored at the same time, and use oversize pistons. Do not perform boring on one cylinder only, nor use an oversize piston for one cylinder only.

(2) Get six of the oversize pistons and measure the outer diameter of each piston at the height shown in the figure. (Thrust direction)

Measurement should be performed at a temperature of 20°C (68°F).

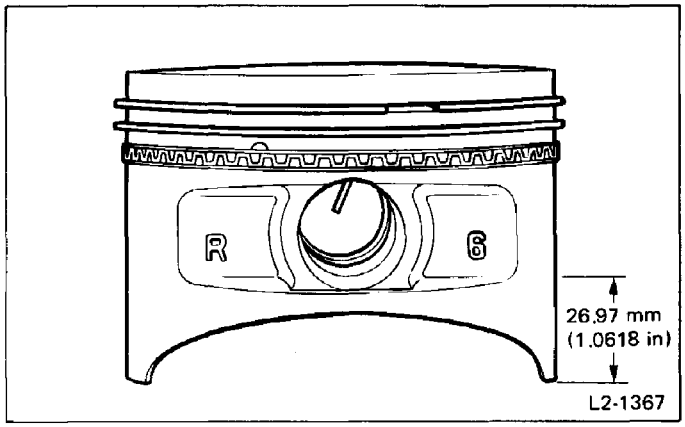

Fig. 212

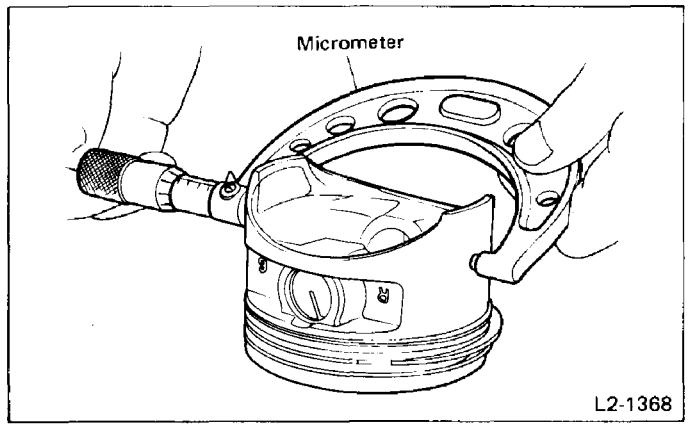

Fig. 213

Piston outer diameter:
Standard
91.970 – 91.980 mm (3.6209 – 3.6213 in)
0.25 mm (0.0098 in) oversize
92.220 – 92.230 mm (3.6307 – 3.6311 in)
0.50 mm (0.0197 in) oversize
92.470 – 92.480 mm (3.6405 – 3.6409 in)

(3) If the cylinder inner diameter exceeds the following enlarging limit after boring and honing, replace the cylinder block.

Immediately after reboring, the cylinder diameter may differ from its real diameter due to temperature rise. Thus, pay attention to this when measuring the cylinder diameter.

Enlarging limit of cylinder inner diameter:
0.5 mm (0.020 in)

ASSEMBLY

1) Install ENGINE STANDS (499817100) to cylinder blocks. When installing ENGINE STANDS, fit bolts to the holes marked with "R" on the #1, #3 and #5 cylinder sides, and to the holes marked with "L" on the #2, #4 and #6 cylinder sides.
2) Install crankshaft bearings to cylinder blocks.
3) Install crankshaft to left-hand cylinder block.

Apply engine oil to sliding surfaces of crankshaft journal and crankshaft bearing.

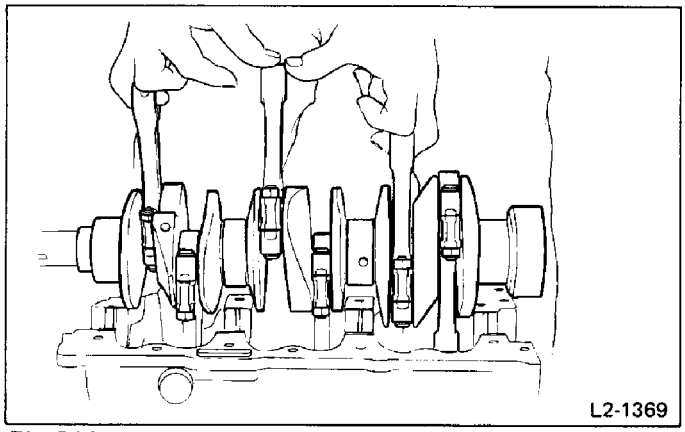

Fig. 214

4) Fit O-ring and back-up ring to coolant passage of left-hand cylinder block.

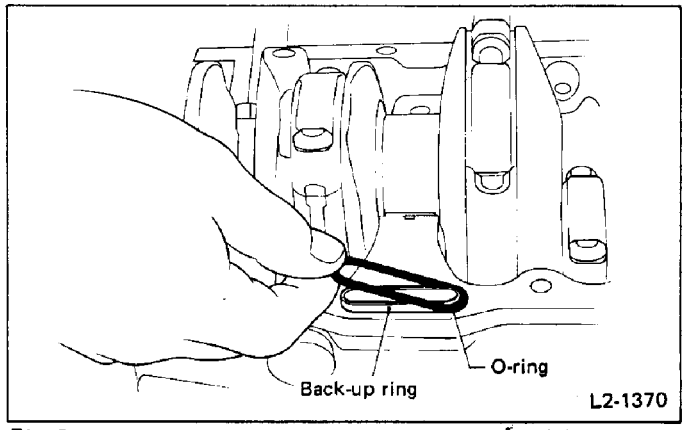

Fig. 215

5) Clean mating surfaces of cylinder block using thinner. Apply liquid packing (Three Bond 1215 or equivalent) to the mating surface (one side only).

Be careful not to extend liquid packing to coolant and oil passages.

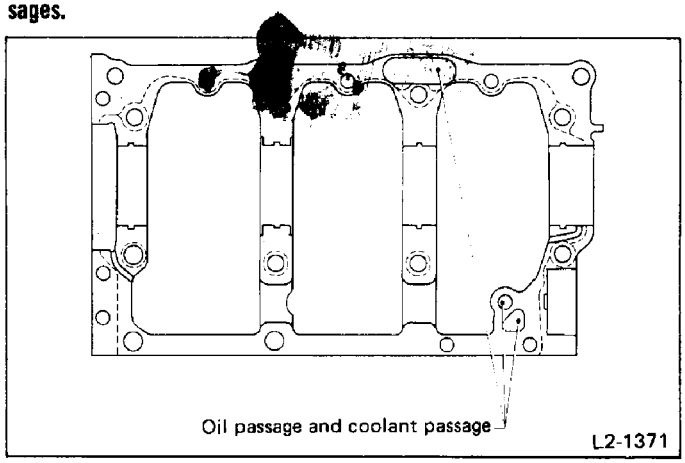

Fig. 216

6) With left-hand cylinder block facing down, install right-hand cylinder block. After tightening bolts temporarily, lay cylinder block down, then tighten bolts to the specified torque.

Make sure O-ring is fitted correctly in groove.

Tightening torque:
10 mm bolt
39 – 47 N·m (4.0 – 4.8 kg-m, 29 – 35 ft-lb)
8 mm bolt
23 – 26 N·m (2.3 – 2.7 kg-m, 17 – 20 ft-lb)

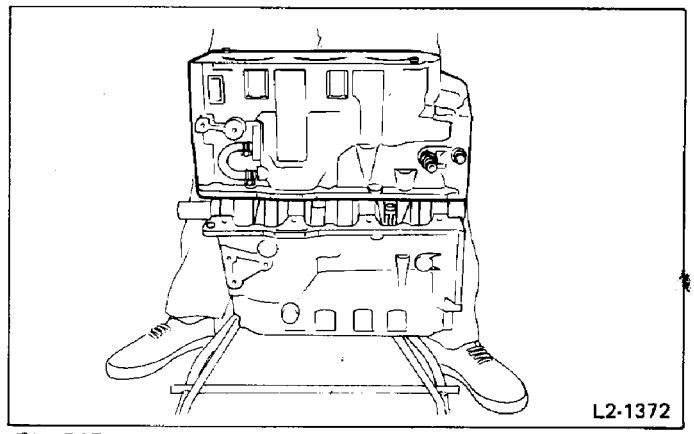

Fig. 217

7) Position the gaps of the piston rings and oil ring as shown in the figure.

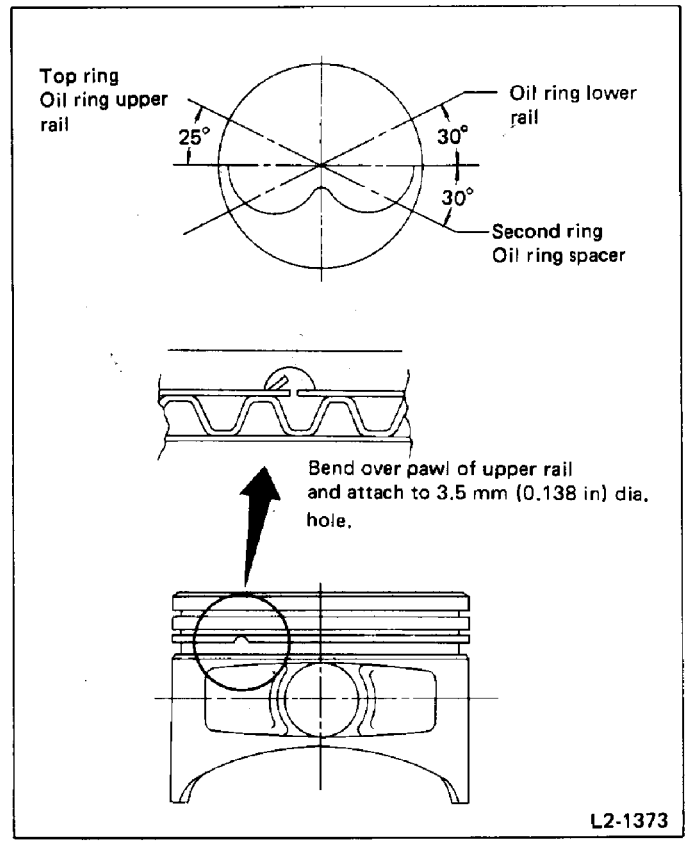

Fig. 218

8) Install pistons in cylinder as follows:
(1) Apply oil to the circumference of piston and the inner surface of cylinder.
(2) With the #5 and #6 cylinders facing downwards, turn crankshaft until the #3 and #4 connecting rod comes to the bottom dead center. Then insert the #4 piston into cylinder by using PISTON GUIDE (398744300).

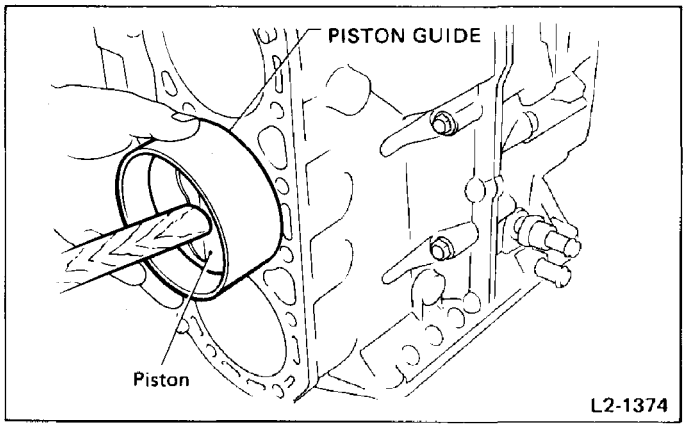

Fig. 219

(3) Install piston pin through the service hole after aligning the service hole, piston pin hole, and connecting rod small end with PISTON PIN GUIDE (499017000).

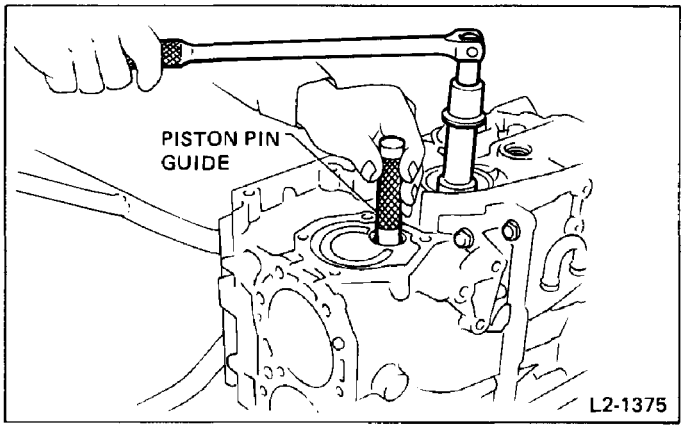

Fig. 220

(4) Install circlips through the service hole, using long-nosed pliers.

Circlip must be installed in correct direction with its end facing out.

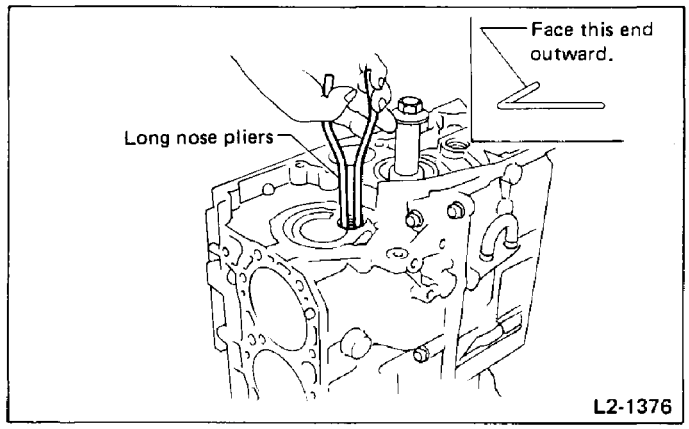

Fig. 221

(5) Circlips must be installed in the order of #3, #1, #2, #5 and #6 pistons.
(6) Turn crankshaft, and check whether piston and circlip are assembled correctly.

9) Apply fluid packing (Three-bond 1205 or equivalent) to plugs, and tighten it with aluminium gasket placed in between.

Tightening torque:
62 – 76 N·m (6.3 – 7.7 kg-m, 46 – 56 ft-lb)

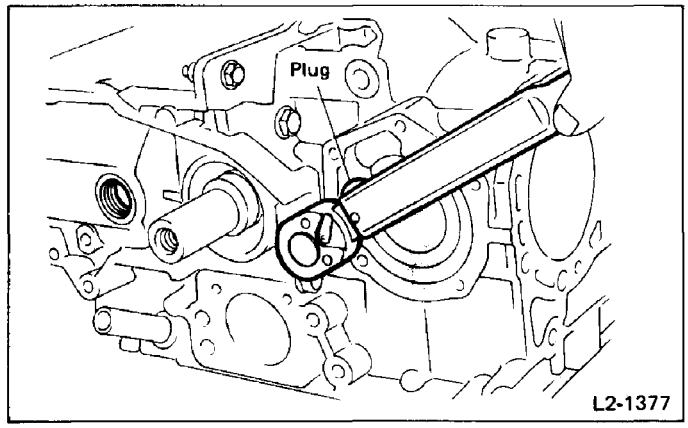

Fig. 222

10) Install front oil seal to cylinder block using INSTALLER (499567100).

Coat the outside surface of oil seal with engine oil and oil seal lip with grease. Force-fit oil seal squarely into position.

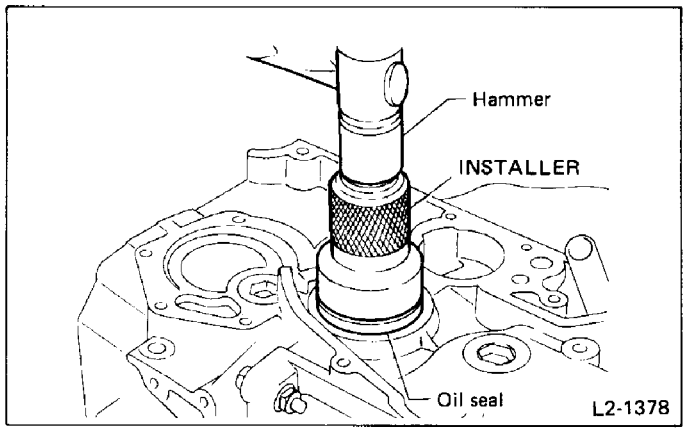

Fig. 223

11) Install rear oil seal to cylinder block using INSTALLER (499587000).

Coat the outside surface of oil seal with engine oil, and oil seal lip with grease. Force-fit oil seal squarely into position.

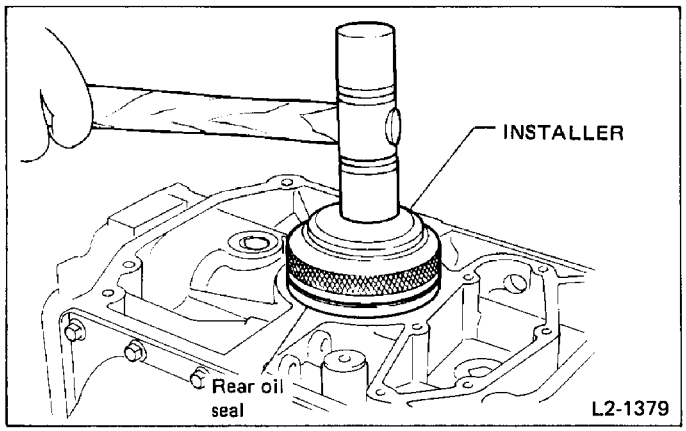

Fig. 224

12) Install oil separator cover with gasket placed in between.

Tightening torque:
4.4 – 5.4 N·m (0.45 – 0.55 kg-m, 3.3 – 4.0 ft-lb)

13) Install flywheel housing.

Tightening torque:
34 – 40 N·m (3.5 – 4.1 kg-m, 25 – 30 ft-lb)

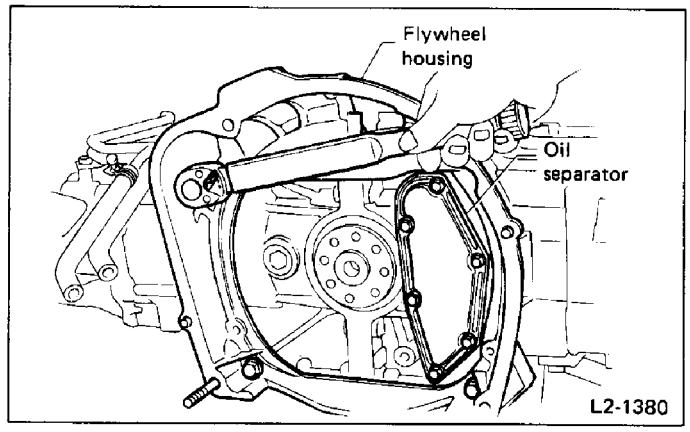

Fig. 225

INSTALLATION

1) Install oil pan.

Tightening torque:
4.4 – 5.4 N·m (0.45 – 0.55 kg-m, 3.3 – 4.0 ft-lb)

2) Install cylinder heads to cylinder blocks with gaskets placed between.
When tightening bolts, apply oil to the threads and tighten them in two successive steps until the final tightening is at the specified torque.
(Refer to "Cylinder Head".)

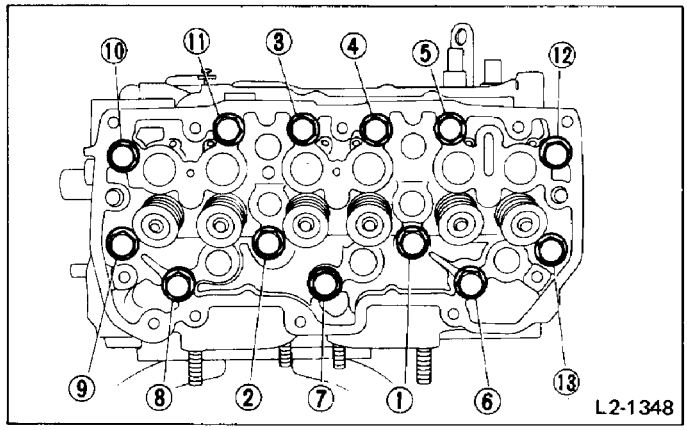

Fig. 226

Tightening torque:
60 – 68 N·m (6.1 – 6.9 kg-m, 44 – 50 ft-lb)

3) Install flywheel to crankshaft using FLYWHEEL STOPPER (498277000) for locking crankshaft. [Manual transmission model]

Tightening torque:
69 – 75 N·m (7.0 – 7.6 kg-m, 51 – 55 ft-lb)

4) Install drive plate and reinforcement using DRIVE PLATE STOPPER (498497000) for locking crankshaft. [Automatic transmission model]

Tightening torque:
69 – 75 N·m (7.0 – 7.6 kg-m, 51 – 55 ft-lb)

5) Position the clutch cover so that the "●" marks on the flywheel and clutch cover are spaced 120° or more.
Install clutch disc and clutch cover with bolts and spring washers, aligning clutch disc with flywheel by inserting CLUTCH DISC GUIDE (499747000) into needle bearing fitted in flywheel. [Manual transmission model]

Tightening torque:
14.2 – 17.2 N·m
(1.45 – 1.75 kg-m, 10.5 – 12.7 ft-lb)

6) Install seal to water pump, then install the water pump to cylinder block with gasket placed between.

7) Install oil pump ASSY, proceeding as follows:
(1) Thoroughly remove excess fluid packing from rotor housing of cylinder block.
(2) Apply a small amount of fluid packing (Three-bond 1207B or equivalent) to the portion indicated by arrow in figure in cylinder block.

Remove any Three Bond 1207B which protrudes into rotor chamber.

(3) Apply ample engine oil to rotor housing, then insert outer rotor into rotor housing by setting it as shown.
(4) Set oil pump pulley as shown, and install oil pump ASSY to cylinder block with gasket placed between. After installing, make sure pulley can be rotated smoothly.

Apply grease to oil pump gasket to prevent dislocation from the groove.

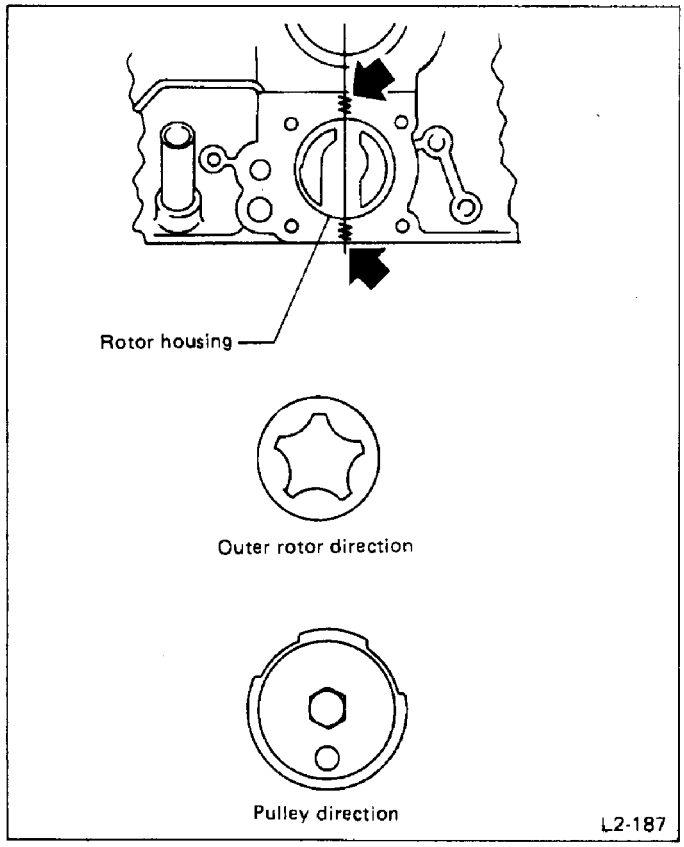

Fig. 227

8) Insert valve lash adjusters into cylinder head.

Be sure to insert each valve lash adjuster to its original position.

9) Apply grease to spherical surface and sliding surface of each valve rocker, then secure valve rockers to the respective valve adjusters and valves.

Be sure to apply grease; otherwise, valve rocker will drop off.

10) Apply fluid packing (Three-bond 1207B or equivalent) to groove of each camshaft case, then install to cylinder head.

Tightening torque:
23 – 26 N·m (2.3 – 2.7 kg-m, 17 – 20 ft-lb)

After installing, abundantly apply engine oil to sliding surfaces of cam and valve rocker.

11) Attach gaskets to valve rocker covers, and install the covers to camshaft cases with rocker cover washers and bolts.

Tightening torque:
4.4 – 5.4 N·m (0.45 – 0.55 kg-m, 3.3 – 4.0 ft-lb)

12) Install timing belt, belt cover and related parts. (Refer to "Timing Belt and Belt Cover".)

13) Install crank pulley to crankshaft using FLYWHEEL STOPPER (498277000) [manual transmission model] or DRIVE PLATE STOPPER (498497000) [automatic transmission model] to lock crankshaft.

Tightening torque:
89 – 107 N·m (9.1 – 10.9 kg-m, 66 – 79 ft-lb)

14) Install water pump pulley and pulley cover to water pump ASSY, and tighten bolts temporarily.
15) Install oil level gauge and gauge guide. Apply engine oil to O-ring beforehand.
16) Install oil filler duct and bracket.
17) Install water by-pass pipe, hose, and water pipe. Apply coolant O-rings beforehand.
18) Install knock sensor.

Tightening torque:
22 – 27 N·m (2.2 – 2.8 kg-m, 16 – 20 ft-lb)

19) Install alternator brackets.

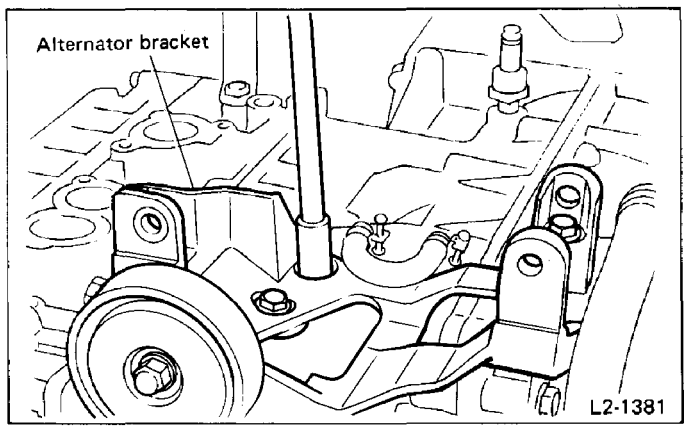

Fig. 228

20) Install PCV connector and harness clamp.

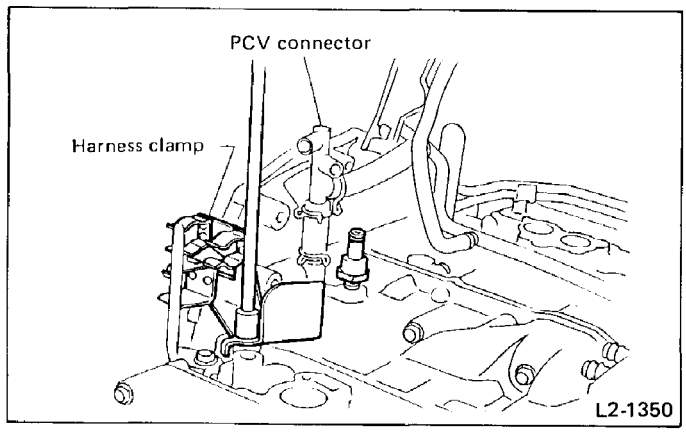

Fig. 229

21) Install intake manifold ASSY.

Tightening torque:
18 – 22 N·m (1.8 – 2.2 kg-m, 13 – 16 ft-lb)

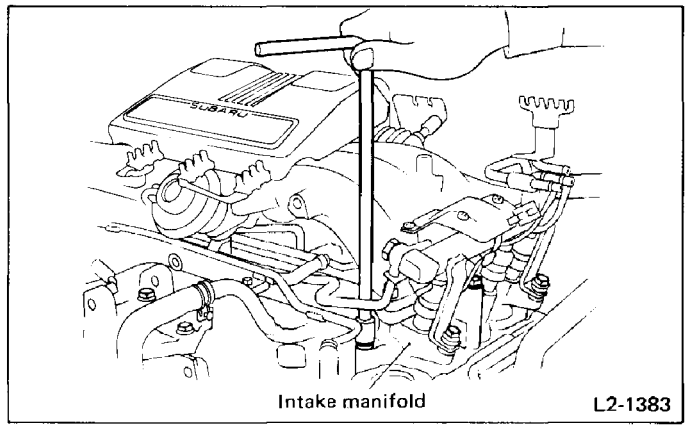

Fig. 230

22) Install harnesses.
23) Install hoses and tubes.
24) Install alternator to bracket, and tighten bolts temporarily.
25) Install distributor, proceeding as follows:
(1) Bring #1 cylinder piston to its top dead center on compression stroke. Set camshaft sprocket to the position shown in Figure.

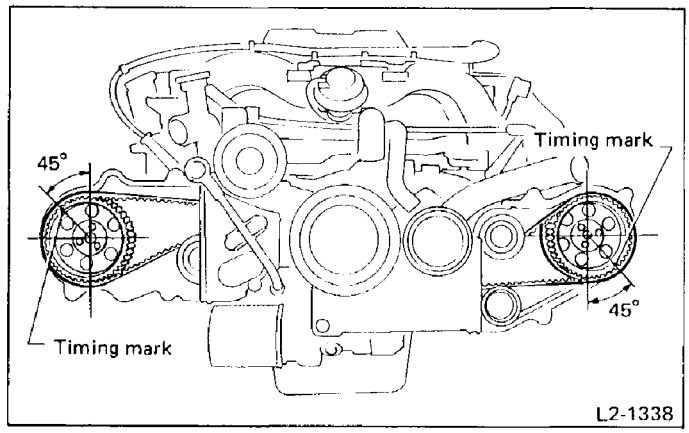

Fig. 231

(2) Align distributor housing match mark with pinion gear match mark to set #1 cylinder at igniting position.

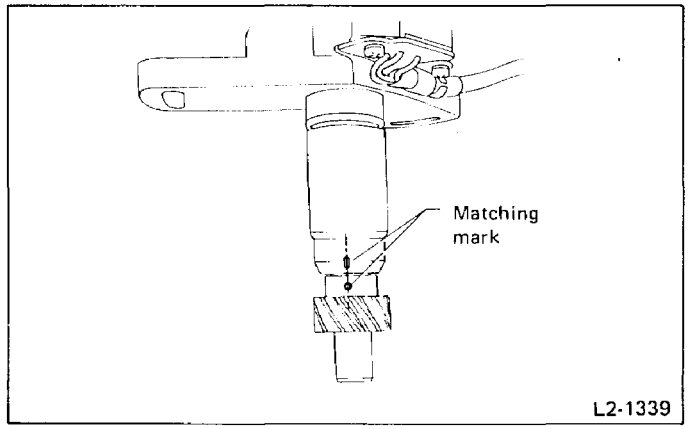

Fig. 232

(3) Install distributor to camshaft case.
(4) Connect lead wires.
(5) Install plug cord and high-tension cord.
26) Install right and left belt covers.
27) Remove ENGINE STAND.

Crankshaft and Piston

DISASSEMBLY

PISTON

1) Remove the piston rings using the piston ring expander.

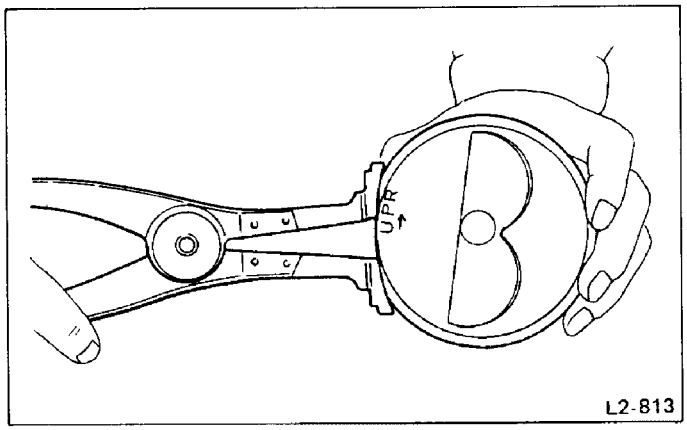

Fig. 233

2) Remove the oil ring by hand.

Arrange the removed piston rings in good order to prevent confusion.

CONNECTING ROD

Remove connecting rod cap mounting nuts, and take out connecting rod from crankshaft.

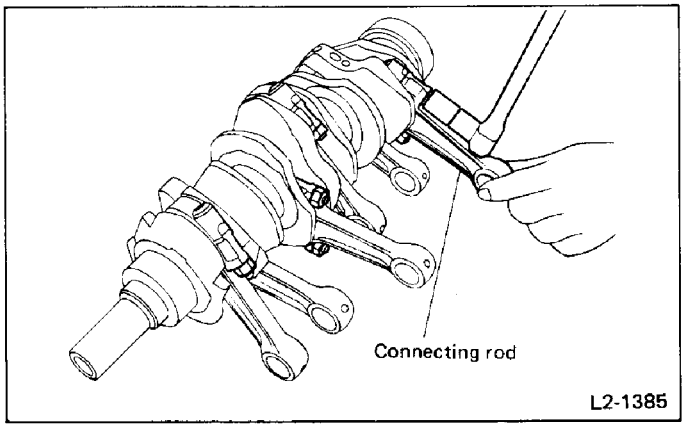

Fig. 234

Arrange removed connecting rod and connecting rod cap in good order to prevent confusion.

INSPECTION

PISTON AND PISTON PIN

1) Check pistons and piston pins for damage, cracks, and wear and the piston ring grooves for wear and damage. Replace if defective.
2) Measure the piston-to-cylinder clearance at each cylinder as instructed in CYLINDER AND PISTON. If any of the clearances is not to specification, replace the piston or bore the cylinder to use an oversize piston.
3) Make sure that piston pin can be inserted into the piston pin hole with a thumb at 20°C (68°F). Replace if defective.

Specifications for piston and piston pin:
Standard outer diameter of piston pin
20.994 – 21.000 mm (0.8265 – 0.8268 in)
Standard inner diameter of piston pin hole
20.999 – 21.009 mm (0.8267 – 0.8271 in)
Standard clearance between piston pin and hole in piston
0.001 – 0.015 mm (0.00004 – 0.00059 in)
Standard clearance between piston pin and hole in connecting rod
0 – 0.022 mm (0 – 0.0009 in)

If burr is created on piston pin hole when removing circlip, carefully remove it so that piston pin can move.

PISTON RING

1) If piston ring is broken, damaged, or worn, or if its tension is insufficient, or when the piston is replaced, replace piston ring with a new one of the same size as the piston.

"R" is marked on the end of the top and second rings. When installing the rings to the piston, face this mark upward.

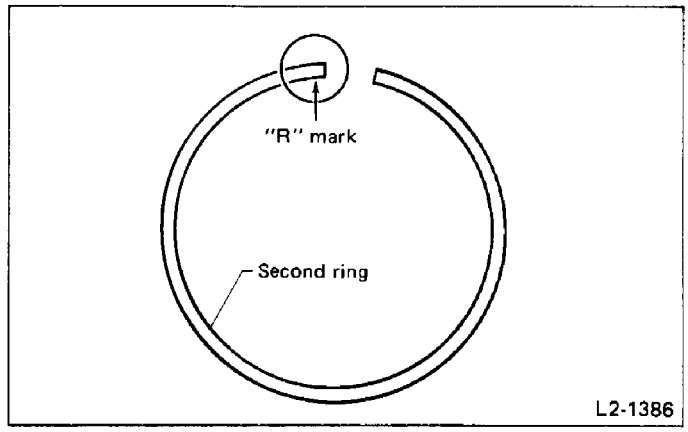

Fig. 235

The oil ring is a combined ring consisting of two rails and a spacer in between. When installing, be careful not to make misassembly.

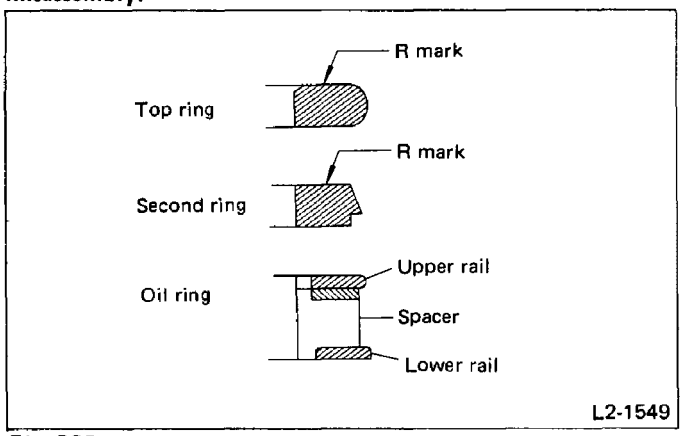

Fig. 236

2) Squarely place piston ring in cylinder and measure the piston ring gap with a thickness gauge.

		Standard	Limit
Piston ring gap	Top ring	0.20 – 0.35 mm (0.0079 – 0.0138 in)	1.5 mm (0.059 in)
	Second ring	0.20 – 0.35 mm (0.0079 – 0.0138 in)	1.5 mm (0.059 in)
	Oil ring rail	0.3 – 0.90 mm (0.012 – 0.0354 in)	2.0 mm (0.079 in)

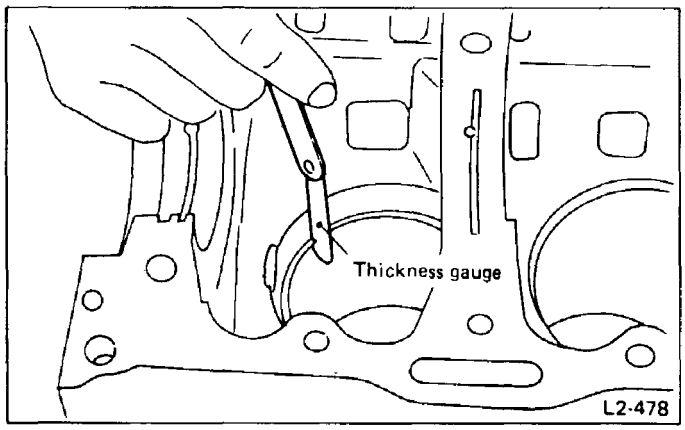

Fig. 237

3) Measure the clearance between piston ring and piston ring groove with a thickness gauge.

Before measuring the clearance, clean the piston ring groove and piston ring.

		Standard	Limit
Clearance between piston ring and piston ring groove	Top ring	0.04 – 0.08 mm (0.0016 – 0.0031 in)	0.15 mm (0.0059 in)
	Second ring	0.03 – 0.07 mm (0.0012 – 0.0028 in)	0.15 mm (0.0059 in)
	Oil ring	0	0

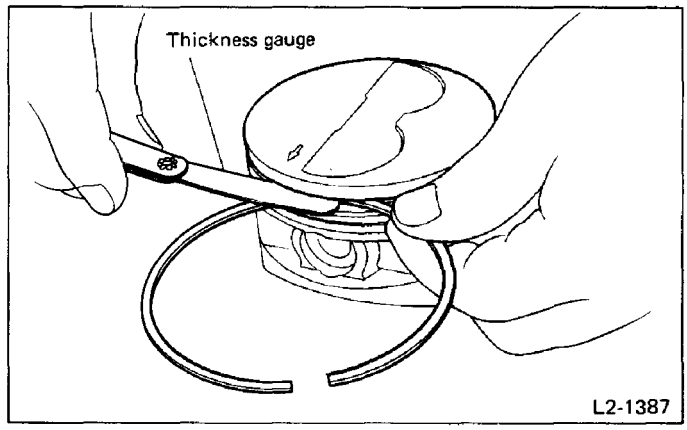

Fig. 238

CONNECTING ROD

1) Replace connecting rod, if the large or small end thrust surface is damaged.

2) Check for bend or twist using a connecting rod aligner. Replace connecting rod if the bend or twist exceeds the limit.

Limit of bend or twist per 100 mm (3.94 in) in length: 0.10 mm (0.0039 in)

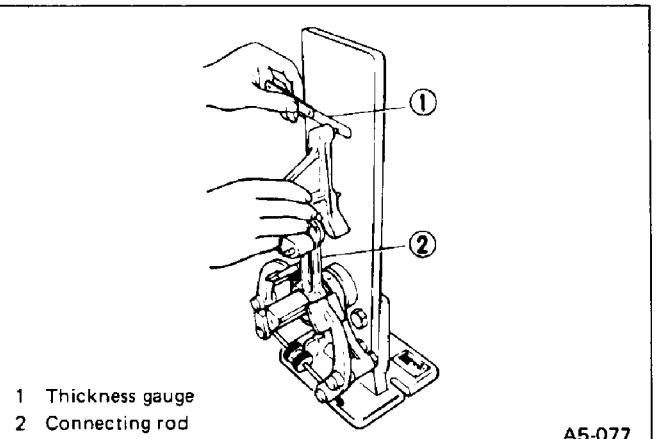

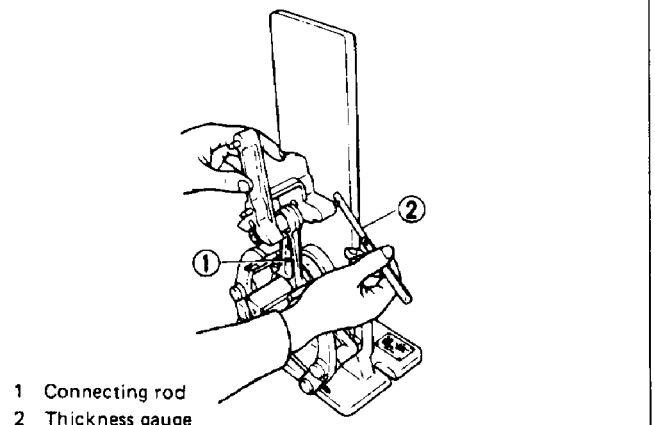

Fig. 239

3) Install connecting rod fitted with bearing to crankshaft and measure the side clearance (thrust clearance). Replace connecting rod if the side clearance exceeds the specified limit.

Connecting rod side clearance:
Standard
0.070 – 0.330 mm (0.0028 – 0.0130 in)
Limit
0.4 mm (0.016 in)

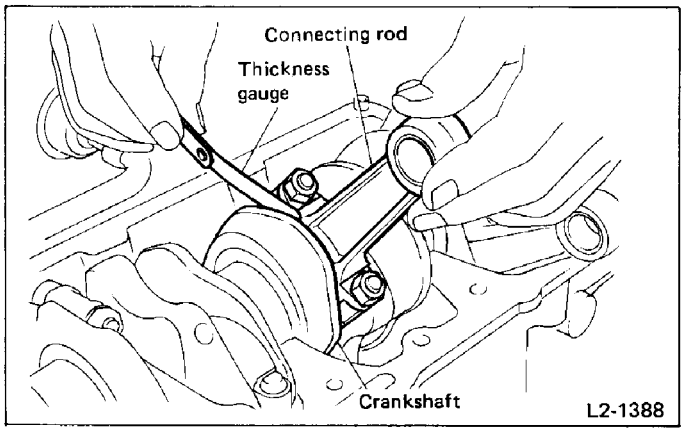

Fig. 240

4) Inspect connecting rod bearing for scar, peeling, seizure, melting, wear, etc.
5) Measure the oil clearance on individual connecting rod bearings by means of plastigauge according to the following procedure.
(1) Wipe off oil, dust, etc. on the surfaces to be measured.
(2) Cut the plastigauge to the width of the bearing, place it on the crankpin parallel with the crankshaft axis, and install connecting rod. Tighten connecting rod nuts to the specified torque.

Tightening torque:
39 – 42 N·m (4.0 – 4.3 kg-m, 29 – 31 ft-lb)

During this measurement, do not allow relative movement between the crankpin and connecting rod.

(3) Remove connecting rod and measure the width of the plastigauge with the scale printed on the plastigauge case. If any oil clearance is not within specification, replace the defective bearing with a new one of standard size or undersize as necessary, and replace or recondition the crankshaft as necessary. (See the table below.)

Connecting rod oil clearance:
Standard
0.010 – 0.070 mm (0.0004 – 0.0028 in)
Limit
0.10 mm (0.0039 in)

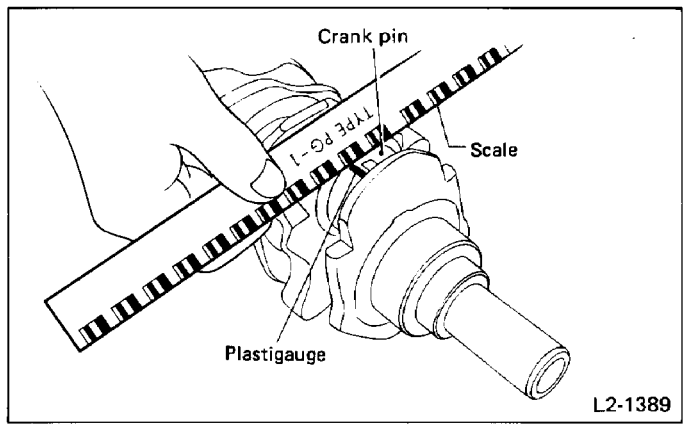

Fig. 241

Connecting rod bearing	
Bearing size	Thickness at center of bearing
Standard	1.485 – 1.490 mm (0.0585 – 0.0587 in)
0.03 mm (0.0012 in) undersize	1.500 – 1.505 mm (0.0591 – 0.0593 in)
0.05 mm (0.0020 in) undersize	1.510 – 1.515 mm (0.0594 – 0.0596 in)
0.25 mm (0.0098 in) undersize	1.610 – 1.615 mm (0.0634 – 0.0636 in)

6) Inspect bushing at connecting rod small end, and replace if worn or damaged. Also measure the piston pin clearance at the connecting rod small end.

Standard clearance between piston pin and bushing in connecting rod:
0 – 0.022 mm (0 – 0.0009 in)

CRANKSHAFT AND CRANKSHAFT BEARING

1) Clean crankshaft completely and check for cracks by means of red check etc., and replace if defective.
2) Measure the crankshaft bend, and correct or replace if it exceeds the limit.

When measuring, place both the front and rear journals on blocks located on a surface plate, and apply a dial gauge to the center journal.

Crankshaft bend limit:
0.035 mm (0.0014 in)

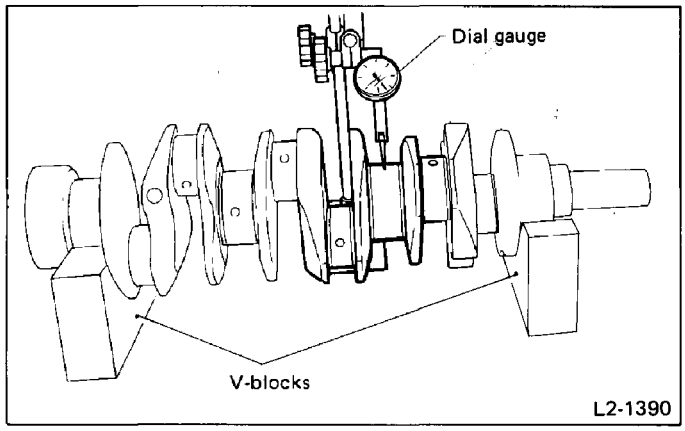

Fig. 242

3) Inspect the crank journal and crankpin for wear. If not to specifications, replace bearing with an undersize one, and replace or recondition crankshaft as necessary. When grinding crank journal or crankpin, finish them to the specified dimensions according to the undersize bearing to be used.

Crankpin and crank journal:
Out-of-roundness
0.03 mm (0.0012 in) or less
Grinding limit
0.25 mm (0.0098 in)

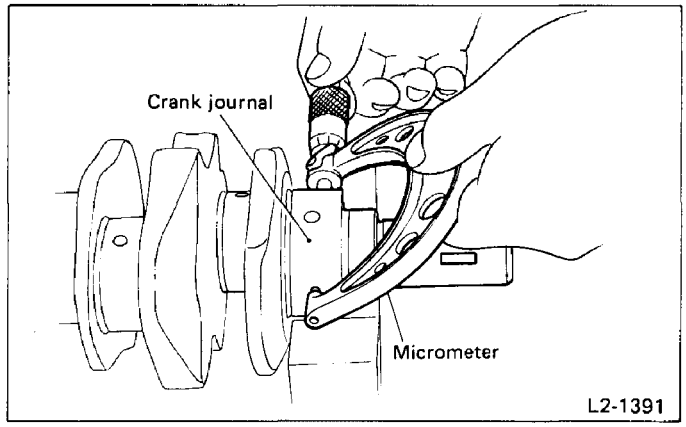

Fig. 243

4) Measure the thrust clearance of crankshaft at center bearing. If the clearance exceeds the limit, replace bearing.

Crankshaft thrust clearance
Standard
0.010 – 0.095 mm (0.0004 – 0.0037 in)
Limit
0.3 mm (0.0118 in)

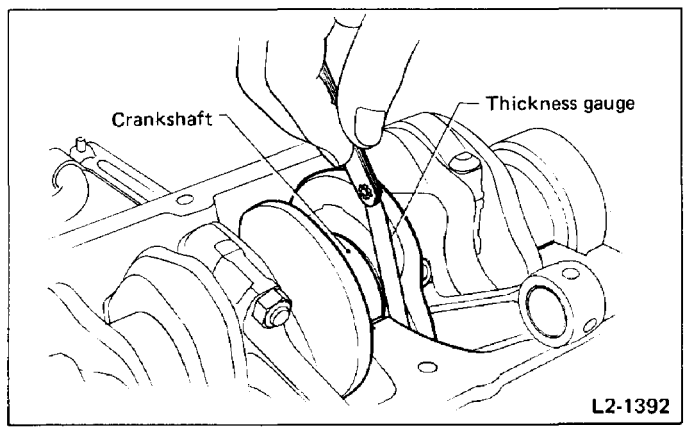

Fig. 244

5) Inspect individual crankshaft bearings for signs of flaking, seizure, melting, and wear.

6) Measure the oil clearance on each crankshaft bearing by means of plastigauge as follows:

(1) Wipe off oil, dust, etc. on the surfaces to be measured.

(2) Install bearings in crankcase and set crankshaft in position.

(3) Cut the plastigauge to the bearing width and place it on journal parallel with the crankshaft axis. Be careful not to put it on the oil hole or groove. Bring together the crankcase halves and tighten bolts to the specified torque.

During the work, the crankshaft must not be turned nor the crankcase inverted.

Torque:
39 – 47 N·m (4.0 – 4.8 kg-m, 29 – 35 ft-lb)

	Crankpin O.D.	Crank journal O.D.		
		Front	Center, Center II	Rear
Standard	44.995 – 45.010 mm (1.7715 – 1.7720 in)	54.957 – 54.972 mm (2.1637 – 2.1642 in)	54.954 – 54.970 mm (2.1635 – 2.1642 in)	54.955 – 54.970 mm (2.1636 – 2.1642 in)
0.03 mm (0.0012 in) undersize	44.965 – 44.980 mm (1.7703 – 1.7709 in)	54.927 – 54.942 mm (2.1625 – 2.1631 in)	54.924 – 54.940 mm (2.1624 – 2.1630 in)	54.925 – 54.940 mm (2.1624 – 2.1630 in)
0.05 mm (0.0020 in) undersize	44.945 – 44.960 mm (1.7695 – 1.7701 in)	54.907 – 54.922 mm (2.1617 – 2.1623 in)	54.904 – 54.920 mm (2.1616 – 2.1622 in)	54.905 – 54.920 mm (2.1616 – 2.1622 in)
0.25 mm (0.0098 in) undersize	44.745 – 44.760 mm (1.7616 – 1.7622 in)	54.707 – 54.722 mm (2.1538 – 2.1544 in)	54.704 – 54.720 mm (2.1537 – 2.1543 in)	54.705 – 54.720 mm (2.1537 – 2.1543 in)

(4) Remove all bolts and separate crankcase. Measure the plastigauge width with the scale printed on the plastigauge case.

(5) If the measurement is not within the specification, replace defective bearing with an undersize one, and replace or recondition crankshaft as necessary.

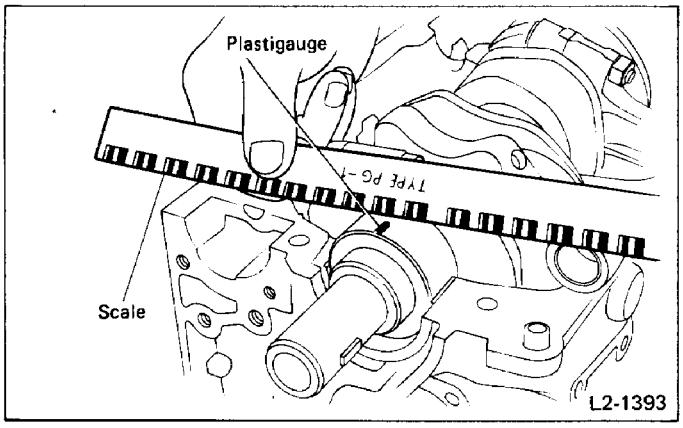

Fig. 245

Crankshaft oil clearance		
Standard	Center & Center II	0.008 – 0.027 mm (0.0003 – 0.0011 in)
	Front & Rear	0.003 – 0.036 mm (0.0001 – 0.0014 in)
Limit	Center & Center II	0.045 mm (0.0018 in)
	Front & Rear	0.055 mm (0.0022 in)

Crankshaft bearing size	Dimensions of bearing	
	Thickness of bearing at center	
	Front & Rear	Center & Center II
Standard	2.015 – 2.019 mm (0.0793 – 0.0795 in)	2.019 – 2.022 mm (0.0795 – 0.0796 in)
0.03 mm (0.0012 in) undersize	2.030 – 2.034 mm (0.0799 – 0.0801 in)	2.034 – 2.037 mm (0.0801 – 0.0802 in)
0.05 mm (0.0020 in) undersize	2.040 – 2.044 mm (0.0803 – 0.0805 in)	2.044 – 2.047 mm (0.0805 – 0.0806 in)
0.25 mm (0.0098 in) undersize	2.140 – 2.144 mm (0.0843 – 0.0844 in)	2.144 – 2.147 mm (0.0844 – 0.0845 in)

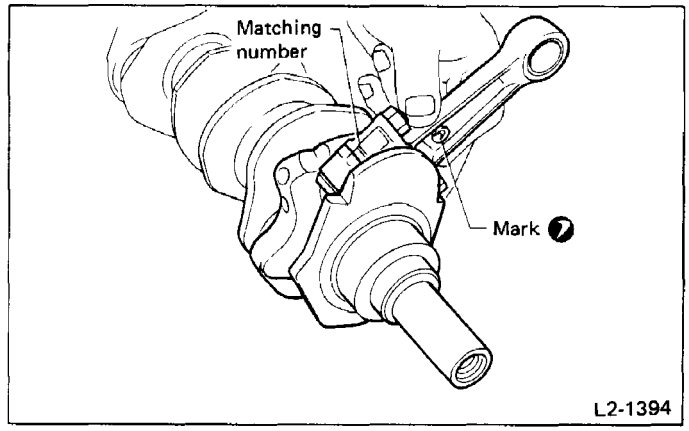

Fig. 246

ASSEMBLY

CRANKSHAFT

1) Install connecting rod bearings on connecting rods and connecting rod caps.

Apply oil to the surfaces of the connecting rod bearings.

2) Install connecting rods and connecting rod caps on crankshaft with connecting rod bolts and nuts.

Torque (Connecting rod nut):
39 – 42 N·m (4.0 – 4.3 kg-m, 29 – 31 ft-lb)
with oil on threads

a. Position each connecting rod with the side marked ❼ facing forward.
b. Each connecting rod has its own mating cap. Make sure that they are assembled correctly by checking their matching number.
c. When tightening the connecting rod nuts, apply oil on the threads.

PISTON

1) Install piston rings on pistons as follows.
Install oil ring spacer, upper rail and lower rail in this order by hand. Then install second ring and top ring with a piston ring expander.

2) Position the gaps of the piston rings and oil ring as shown in the figure.

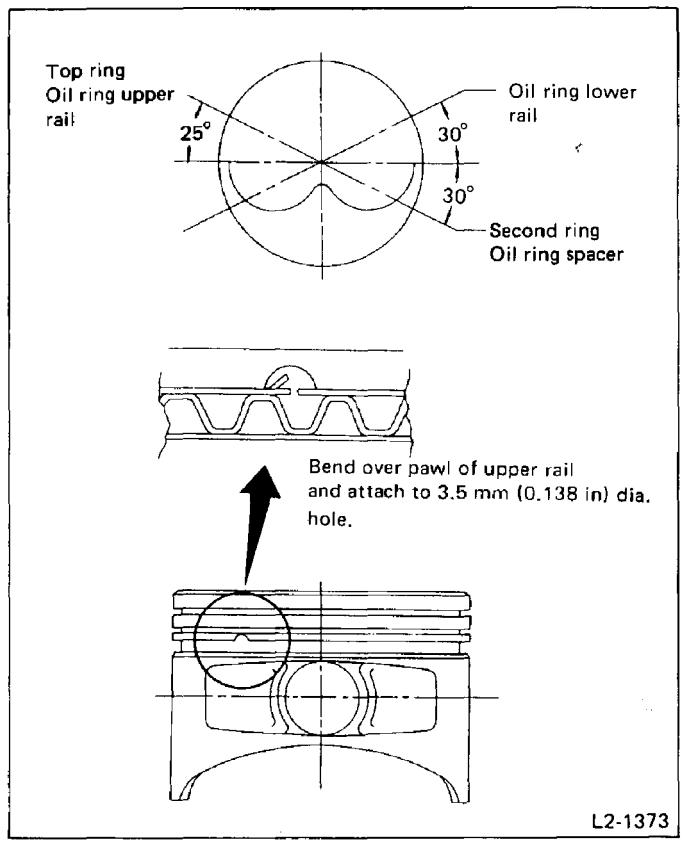

Fig. 247

3) Install circlip to piston.
The circlip must be fitted to the end that faces inside of crankcase when piston is inserted.

Circlip must be installed in correct direction with its end facing out.

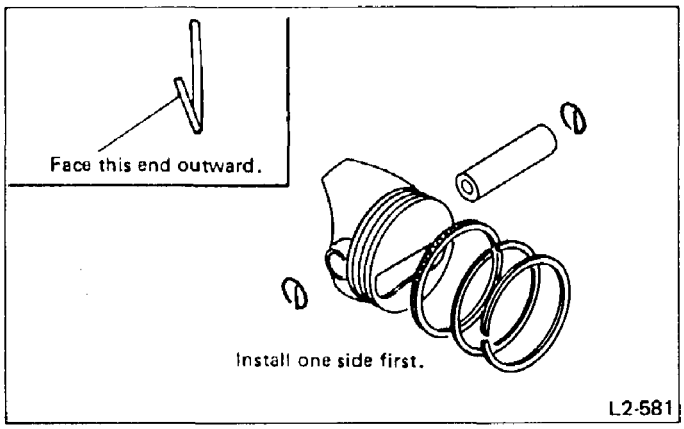

Fig. 248

TROUBLESHOOTING

Refer to "1800 cc Engine TROUBLESHOOTING".

ENGINE LUBRICATION SYSTEM 2-4

SUBARU

1988

	Page
MECHANISM AND FUNCTION	2
General	2
Lubrication Lines	2
Oil Pump	5
Oil Pressure Switch (Oil Pressure Indicator Light Equipped Model Only)	5
Oil Pressure Gauge	5
SPECIFICATIONS AND SERVICE DATA	7
SPECIFICATIONS	7
SERVICE DATA	8
COMPONENT PARTS	9
Oil Pump	9
SERVICE PROCEDURE	10
Oil Pump	10
TROUBLESHOOTING	13

MECHANISM AND FUNCTION

General

The engine lubrication system is a fully-pressurized full-flow filter type. The lubricating oil is pressurized by a trochoid oil pump with a built-in oil relief valve and oil bypass valve*. This oil pump is driven by the crankshaft at a speed ratio of 1:1 through a timing belt.

If the filtering capacity of the oil filter deteriorates, oil is sent directly to the main gallery through the oil bypass valve. If the oil pressure rises in the oil circuit, excess oil is returned to the oil pump through the oil relief valve.

*: The oil bypass valve is non-disassembling type.

Lubrication Lines

1800 cc Engine

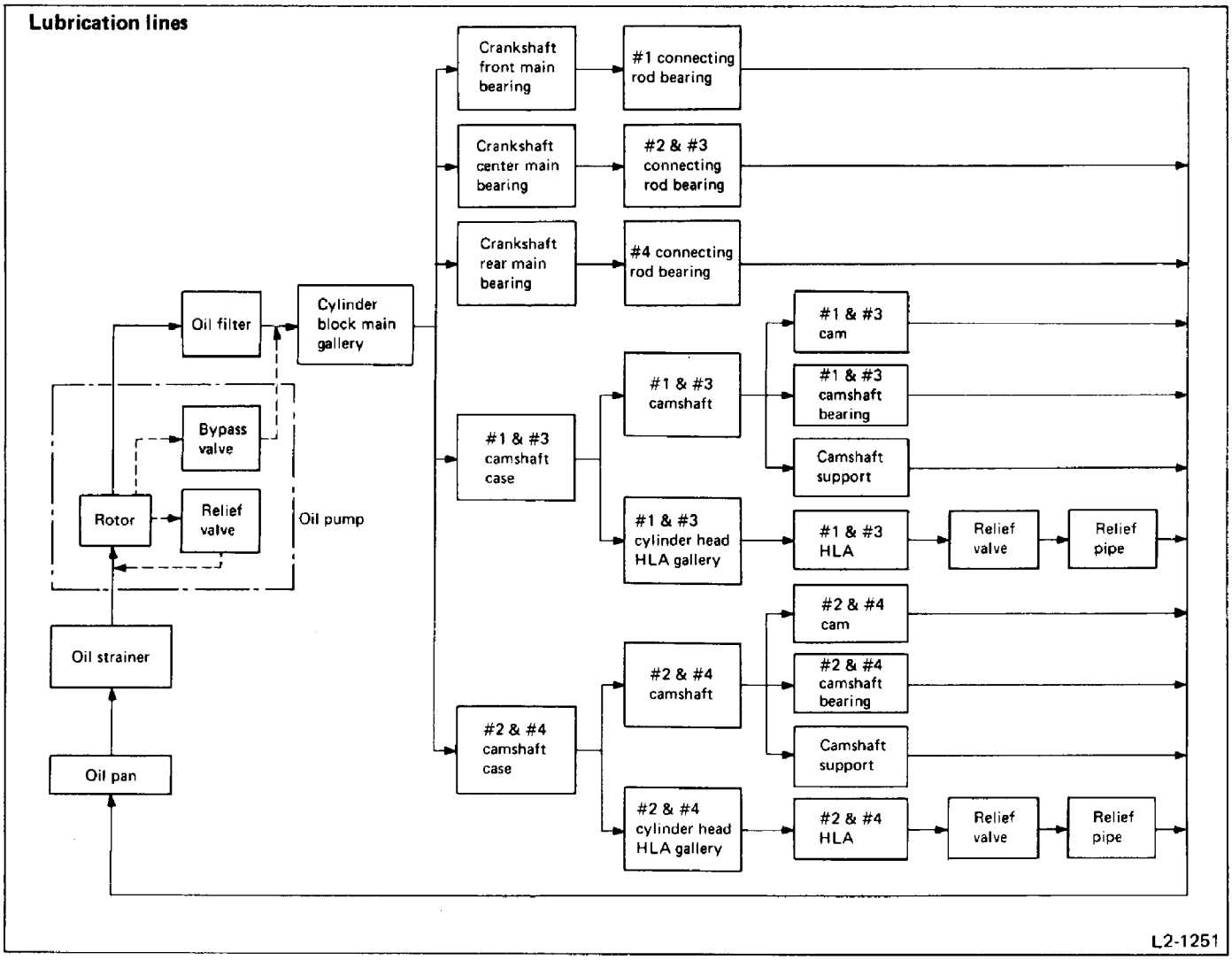

Fig. 1

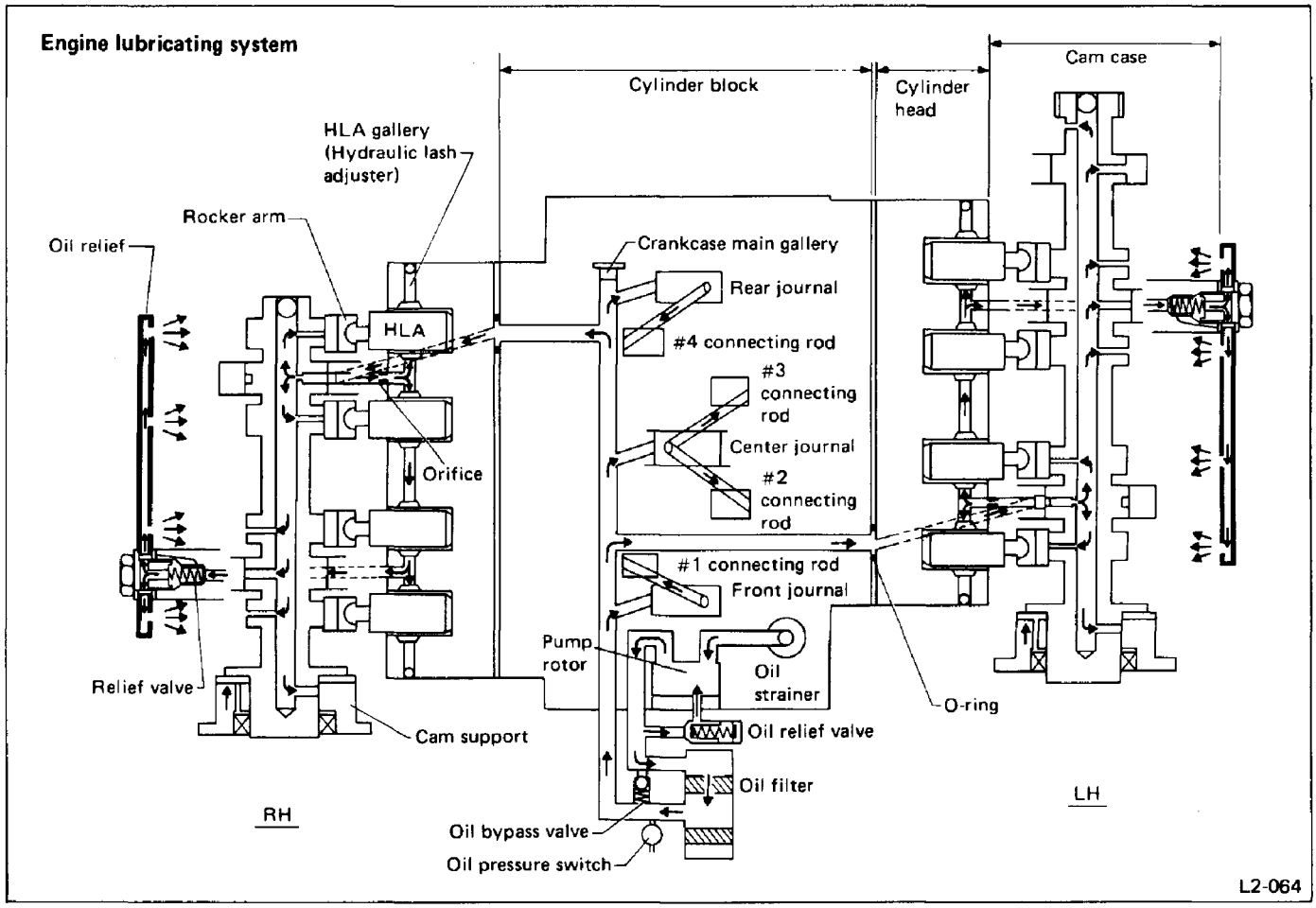
Engine lubricating system
Cylinder block
Cylinder head
Cam case
HLA gallery (Hydraulic lash adjuster)
Rocker arm
Oil relief
Crankcase main gallery
Rear journal
#4 connecting rod
#3 connecting rod
Center journal
#2 connecting rod
HLA
Orifice
#1 connecting rod
Front journal
Pump rotor
Oil strainer
O-ring
Relief valve
Cam support
Oil relief valve
Oil filter
RH
LH
Oil bypass valve
Oil pressure switch
L2-064

Fig. 2

2700 cc Engine

Lubrication lines

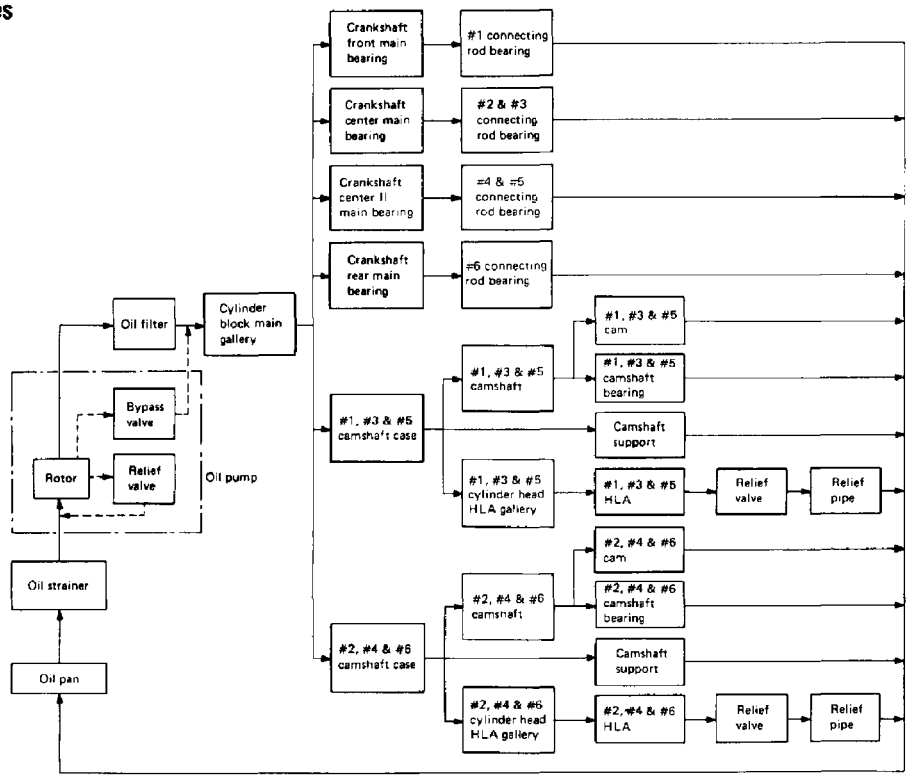

L2-1252

Fig. 3

Engine lubricating system

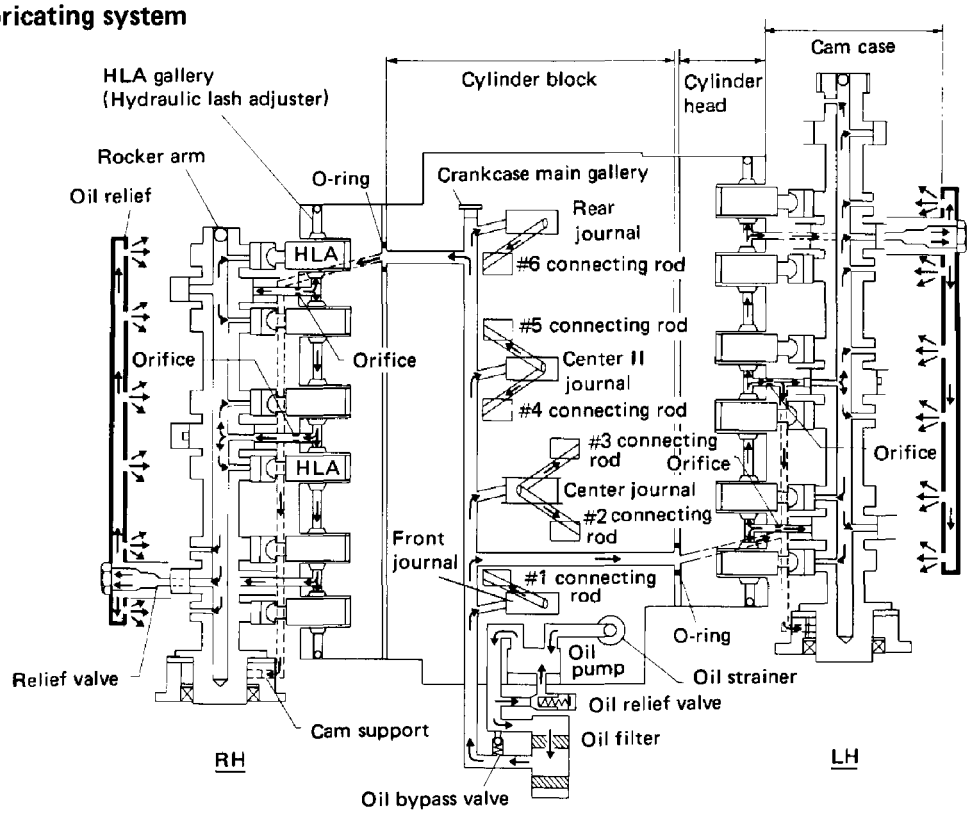

L2-1253

Fig. 4

Oil Pump

The oil pump is a small pump which sucks lubricant from the oil pan, and pressurizes it to send it to each section subjected to friction.
The trochoid pump consists of a pump casing with one lube oil inlet and one outlet, and an inner and outer rotor.

The inner rotor has four projections and the outer rotor has five depressions. As the inner rotor rotates inside the outer rotor, the clearance between the two rotors constantly varies. The oil is pumped in accordance with this clearance change. The trochoid pump is small and features a simple construction which experiences fewer problems.

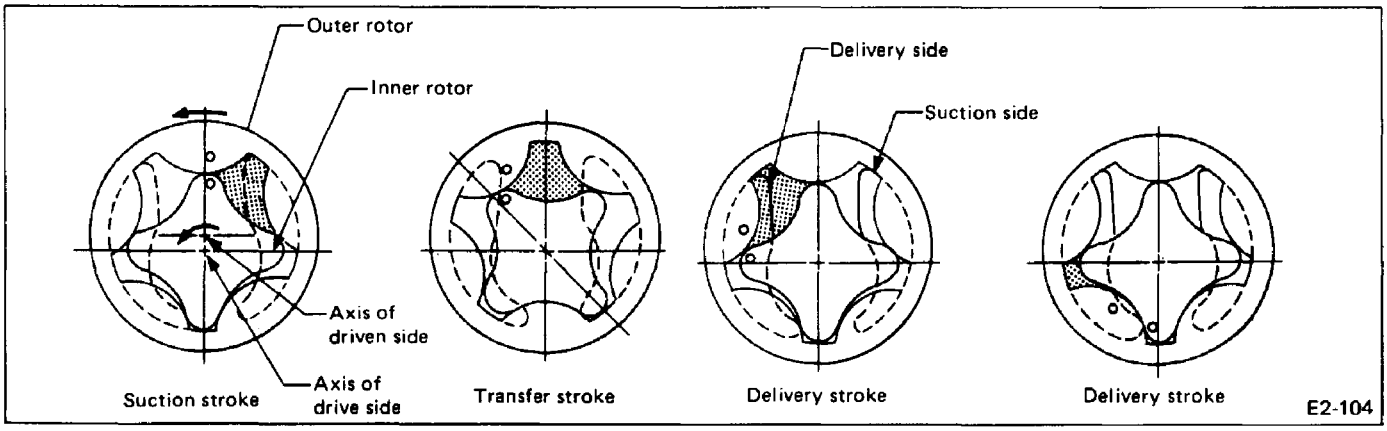

Fig. 5

Oil Pressure Switch

(Oil Pressure Indicator Light Equipped Model Only)

The oil pressure switch is attached to the oil pump case. It monitors the oil pressure and turns on or off the oil pressure indicator light in the combination meter.
The oil pressure switch consists of a diaphragm, which is operated by oil pressure, a set of contacts, which are opened or closed by diaphragm movement, and a spring, which determines when the contacts open depending on the oil pressure. It is enclosed by a housing similar in design to a hexagonal nut molded with phenol resin and a terminal.

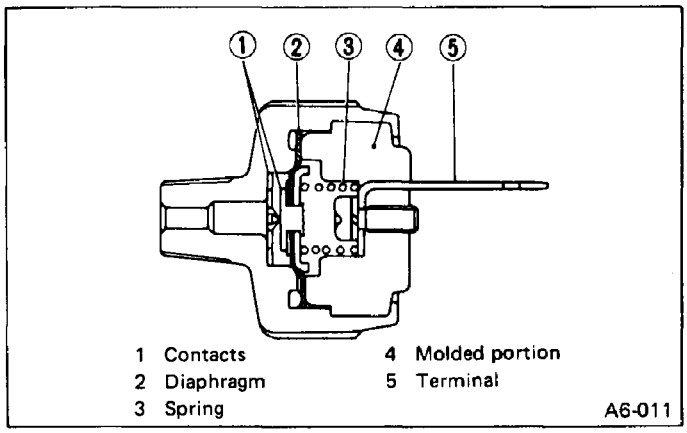

Fig. 6

Oil Pressure Gauge

Construction

GAUGE SECTION

The gauge section consists of a bimetal, pointer and scale plate. The bimetal is wound with heat wire. The pointer moves in response to bending of the bimetal.

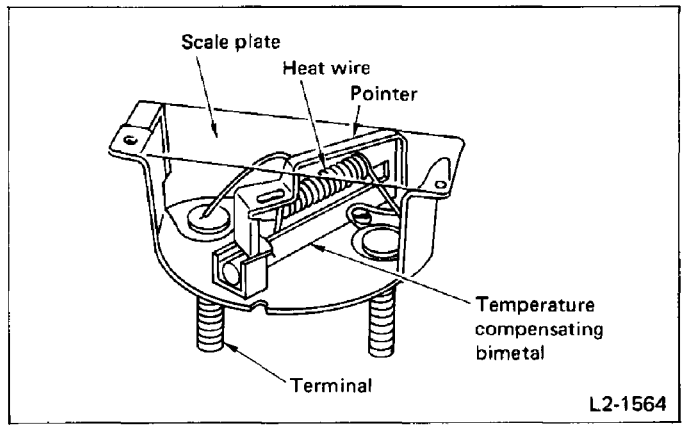

Fig. 7 Construction of the gauge section

SENDER SECTION

This section consists of a diaphragm, point arm, contact points and a heat-wire-wound bimetal. The diaphragm is displaced by oil pressure and the point arm conveys diaphragm displacement to the contacts.
It is completely enclosed by a cover equipped with a positive terminal.

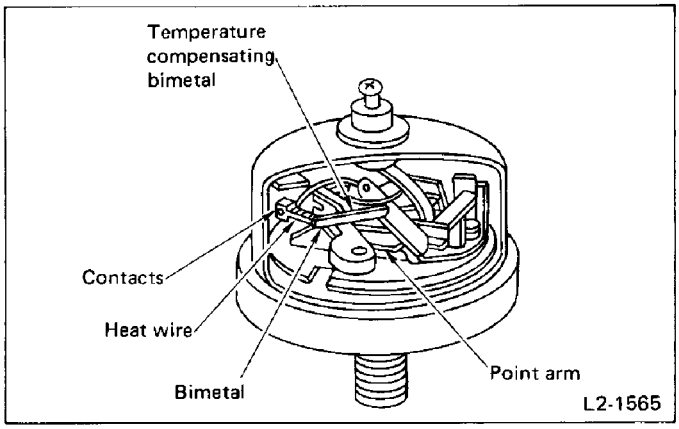

Fig. 8 Construction of the sender section

Operation

1) When no oil pressure is applied, contact points open slightly.

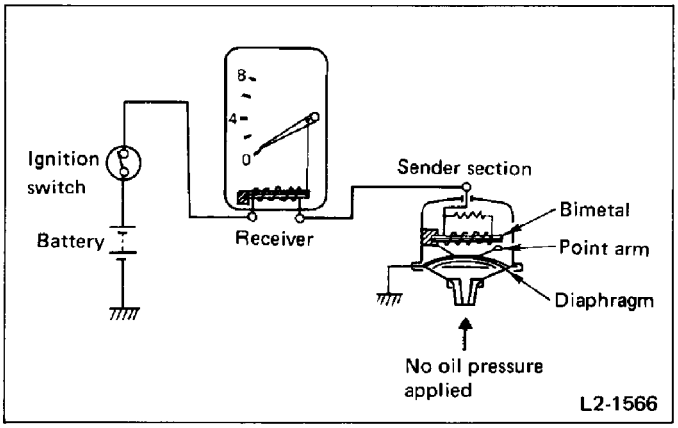

Fig. 9 No oil pressure applied

2) When oil pressure is low:
(1) The point arm is held by the diaphragm and lightly contacts the contact point of the bimetal.
(2) When the ignition switch is turned ON, current flows through the gauge section and heat wire of the sender section. Because of low point contact pressure, heat generated by low current allows the bimetal to bend so that the contact points open.
(3) The contact points (on the sender side) open rapidly. Since the temperature of the bimetal (on the gauge side) does not increase, the bimetal hardly bends and the pointer does not move.

3) When oil pressure is applied:
(1) The diaphragm expands in response to oil pressure so that it pushes up the point arm forcefully. The point arm then contacts the contact point (on the bimetal side).
(2) At this point, when the ignition switch is turned ON to open the contact point, the bimetal bends considerably. In other words, current flows for a long period of time.
(3) However, after current flows through the heat wire for a certain period of time (until the bimetal reaches a certain temperature), the point will open to interrupt the current flow. As the bimetal cools, the contact point closes again.
(4) Thus, the contact point closes and opens in response to the temperature of the bimetal. That is, the temperature in relation to oil pressure. In other words, the bimetal maintains a certain temperature in response to oil pressure.
(5) Similar to the bimetal of the sender section, the bimetal of the gauge section bends as its temperature increases. This causes the gauge pointer to deflect.

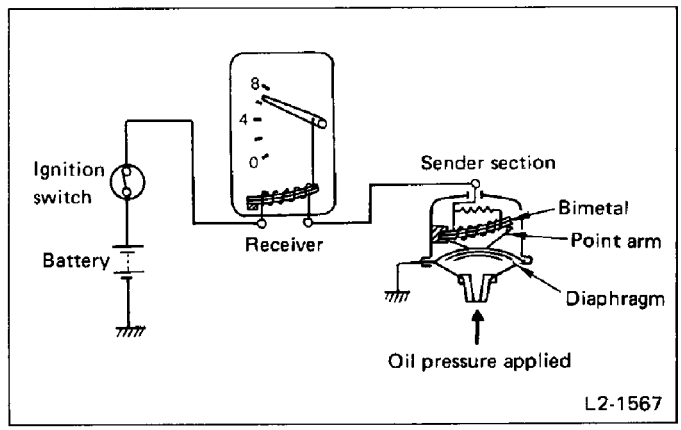

Fig. 10 Oil pressure applied

Operating precautions

1) Do not apply battery voltage directly to the gauge or sender section. Otherwise, the heat wire may burn or the bimetal twist.
2) Connect the terminals firmly.
If an erroneous indication is noted, check wiring for grounding, the terminal for looseness, and the gauge for operation.
3) Do not ground or short the midpoint of the wiring. Otherwise, problems similar to those indicated in 1) above may occur.
4) Do not drop the gauge/sender section and do not allow it to strike adjacent parts.

SPECIFICATIONS AND SERVICE DATA

SPECIFICATIONS

			1800 cc model	2700 cc model
Lubrication method			Forced feed, full flow filtration, splash type	
Oil pump	Pump type		Trochoid type	
	Discharge performance I	Discharge - Pressure	2.0 ℓ/min (2.1 US qt/min, 1.8 Imp qt/min) - 98 kPa (1.0 kg/cm², 14 psi)	5.0 ℓ/min (5.3 US qt/min, 4.4 Imp qt/min) - 98 kPa (1.0 kg/cm², 14 psi)
		Speed	550 rpm	
		Oil temperature	75 – 85°C (167 – 185°F)	
	Discharge performance II	Discharge - Pressure	31.2 ℓ/min (8.24 US gal/min, 6.86 Imp gal/min) - 294 kPa (3.0 kg/cm², 43 psi)	40 ℓ/min (10.6 US gal/min, 8.8 Imp gal/min) - 392 kPa (4.0 kg/cm², 57 psi)
		Speed	5,000 rpm	
		Oil temperature	75 – 85°C (167 – 185°F)	
	Oil relief valve	Pressure at which valve starts to open	392 – 441 kPa (4.0 – 4.5 kg/cm², 57 – 64 psi)	441 – 490 kPa (4.5 – 5.0 kg/cm², 64 – 71 psi)
	Oil bypass valve	Pressure at which valve starts to open	147 kPa (1.5 kg/cm², 21 psi)	
Oil filter		Type	Paper, cartridge type	
		Filtration area	0.137 m² (1.47 sq ft)	
Engine oil capacity		Upper level	4.0 ℓ (4.2 US qt, 3.5 Imp qt)	5.0 ℓ (5.3 US qt, 4.4 Imp qt)
		Lower level	3.0 ℓ (3.2 US qt, 2.6 Imp qt)	4.0 ℓ (4.2 US qt, 3.5 Imp qt)
Oil pressure switch*		Type	Immersed contact point type	–
		Voltage	12V	–
		Warning light	12V - 3.4 W or less	–
		Pressure at which switch closes	14.7 – 24.5 kPa (0.15 – 0.25 kg/cm², 2.1 – 3.6 psi)	–
		Pressure at which switch opens	14.7 – 24.5 kPa (0.15 – 0.25 kg/cm², 2.1 – 3.6 psi)	–
		Proof pressure	981 kPa (10 kg/cm², 142 psi) or more	–
Oil pressure gauge		Type	Bimetal type	
		Voltage	12V	
		Pressure range	0 – 785 kPa (0 – 8 kg/cm², 0 – 114 psi)	

*Oil pressure indicator light equipped model only

SERVICE DATA

				1800 cc model	2700 cc model
Oil pump	Inner rotor outer diameter			35.65 – 35.70 mm (1.4035 – 1.4055 in)	
	Outer rotor outer diameter			49.95 – 50.00 mm (1.9665 – 1.9685 in)	
	Inner and outer rotor height		A	13.89 – 13.91 mm (0.5468 – 0.5476 in)	18.89 – 18.91 mm (0.7437 – 0.7445 in)
			B	13.90 – 13.92 mm (0.5472 – 0.5480 in)	18.90 – 18.92 mm (0.7441 – 0.7449 in)
			C	13.91 – 13.93 mm (0.5476 – 0.5484 in)	18.91 – 18.93 mm (0.7445 – 0.7453 in)
	Oil pump case projection height			7.97 – 8.00 mm (0.3138 – 0.3150 in)	2.97 – 3.00 mm (0.1169 – 0.1181 in)
	Rotor housing depth			21.96 – 22.04 mm (0.8646 – 0.8677 in)	
	Side clearance between inner or outer rotor and crankcase		STD	0.05 – 0.16 mm (0.0020 – 0.0063 in)	
			Limit	0.18 mm (0.0071 in)	
	Case clearance between outer rotor and crankcase		STD	0.10 – 0.18 mm (0.0039 – 0.0071 in)	
			Limit	0.22 mm (0.0087 in)	
	Relief valve spring	Free length		47.1 mm (1.854 in)	52.2 mm (2.055 in)
		Installed length		33.5 mm (1.319 in)	38.9 mm (1.531 in)
		Load when installed		3.88 – 4.28 kg (8.56 – 9.44 lb)	6.15 – 6.75 kg (13.56 – 14.88 lb)

Reference pressure with oil pump equipped on the engine is as follows:

Condition		1800 cc model	2700 cc model
Oil temperature		100°C (212°F)	
Cooling fan		OFF	
Engine oil		10W-30 (SAE)	
Engine speed	2,000 rpm	206 - 304 kPa (2.1 - 3.1 kg/cm^2, 30 - 44 psi)	382 – 490 kPa (3.9 – 5.0 kg/cm^2, 55.– 71 psi)
	4,000 rpm	353 - 441 kPa (3.6 - 4.5 kg/cm^2, 51 - 64 psi)	481 – 569 kPa (4.9 – 5.8 kg/cm^2, 70 – 82 psi)

COMPONENT PARTS

Oil Pump

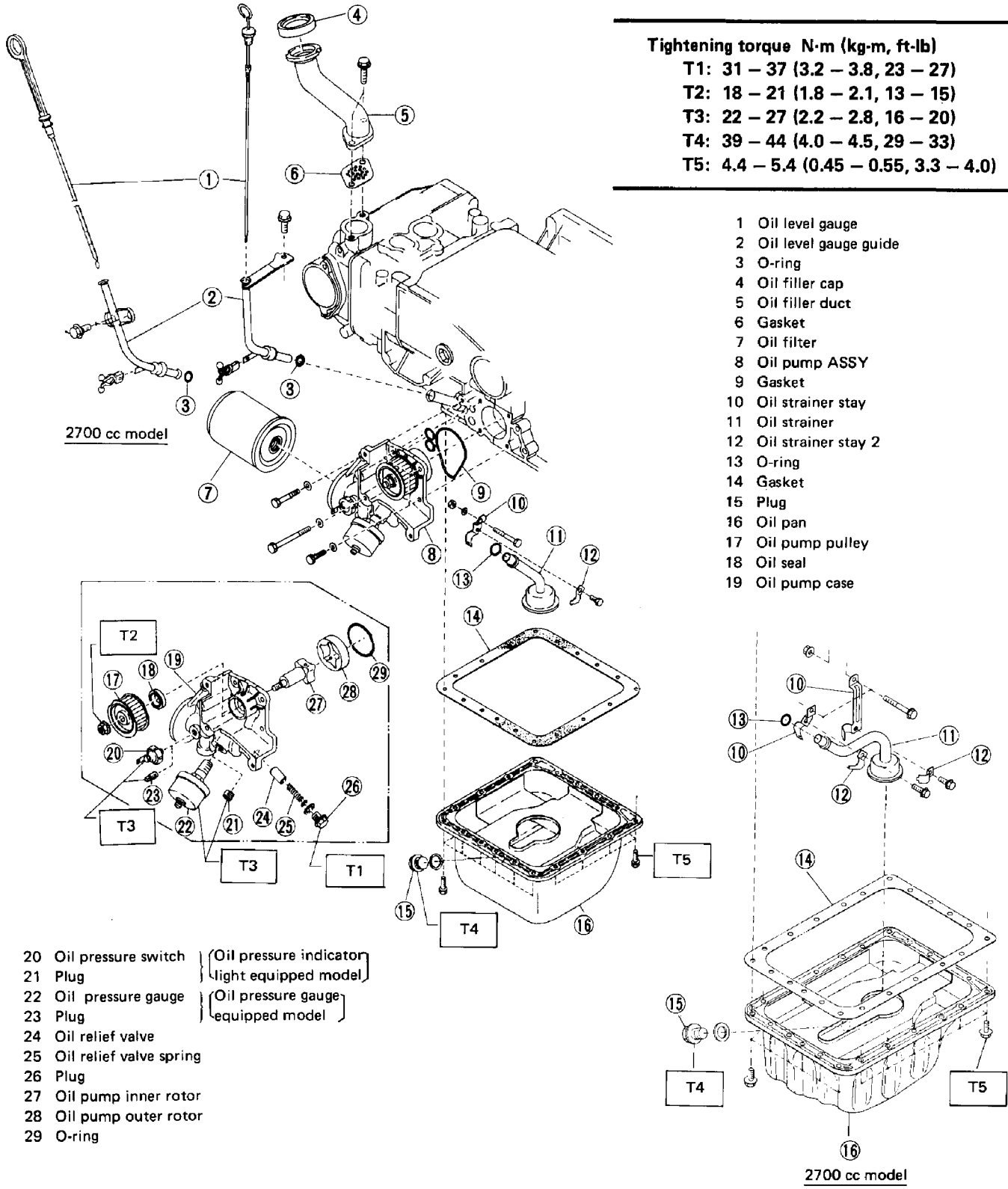

Tightening torque N·m (kg-m, ft-lb)
T1: 31 – 37 (3.2 – 3.8, 23 – 27)
T2: 18 – 21 (1.8 – 2.1, 13 – 15)
T3: 22 – 27 (2.2 – 2.8, 16 – 20)
T4: 39 – 44 (4.0 – 4.5, 29 – 33)
T5: 4.4 – 5.4 (0.45 – 0.55, 3.3 – 4.0)

1 Oil level gauge
2 Oil level gauge guide
3 O-ring
4 Oil filler cap
5 Oil filler duct
6 Gasket
7 Oil filter
8 Oil pump ASSY
9 Gasket
10 Oil strainer stay
11 Oil strainer
12 Oil strainer stay 2
13 O-ring
14 Gasket
15 Plug
16 Oil pan
17 Oil pump pulley
18 Oil seal
19 Oil pump case

20 Oil pressure switch } (Oil pressure indicator light equipped model)
21 Plug
22 Oil pressure gauge } (Oil pressure gauge equipped model)
23 Plug
24 Oil relief valve
25 Oil relief valve spring
26 Plug
27 Oil pump inner rotor
28 Oil pump outer rotor
29 O-ring

Fig. 11

L2-1254

SERVICE PROCEDURE

Oil Pump

REMOVAL

1) Drain engine oil.
2) Remove belt covers and camshaft drive belts. (See Section 2-3 "Engine".)

Before removing camshaft drive belts, be sure to loosen oil pump pulley mounting nut.

3) Remove oil pump mounting bolts, and detach oil pump together with oil filter from cylinder block.

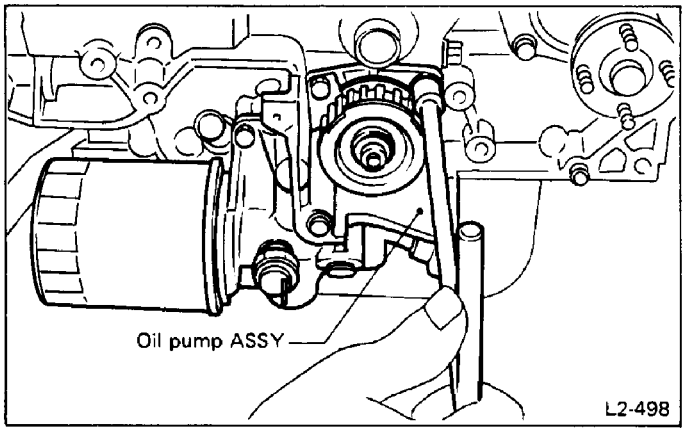

Fig. 12

4) Remove oil pump outer rotor from cylinder block.

DISASSEMBLY

1) Remove oil filter from oil pump.
2) Remove O-ring.
3) Remove oil pressure gauge or oil pressure switch.
4) Remove oil pump pulley, and draw out oil pump inner rotor.
5) Remove oil relief valve plug, and take out spring and ball.

INSPECTION

Wash the disassembled parts, check them for the following items, and repair or replace if defective.

INNER ROTOR

Check the outside diameter of the inner rotor shaft portion, and replace it if worn or damaged.

Outside diameter of inner rotor shaft portion:
35.65 – 35.70 mm (1.4035 – 1.4055 in)

OUTER ROTOR

Check the outer rotor, and replace if worn or damaged.

Outside diameter of outer rotor:
49.95 – 50.00 mm (1.9665 – 1.9685 in)

OIL PUMP CASE CLEARANCE

Measure the clearance between the outer rotor and the cylinder block rotor housing.
If the clearance exceeds the limit, replace the rotor.

Case clearance:
Standard
0.10 – 0.18 mm (0.0039 – 0.0071 in)
Limit
0.22 mm (0.0087 in)

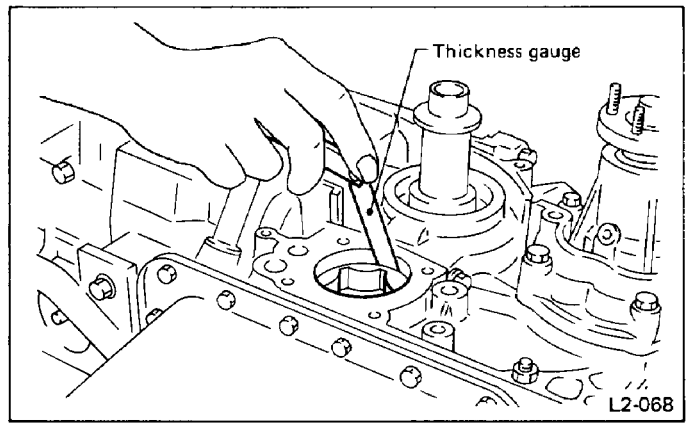

Fig. 13

OIL PUMP SIDE CLEARANCE

1) Measure total height of case projection (H1) plus oil pump inner and outer rotors (H2).

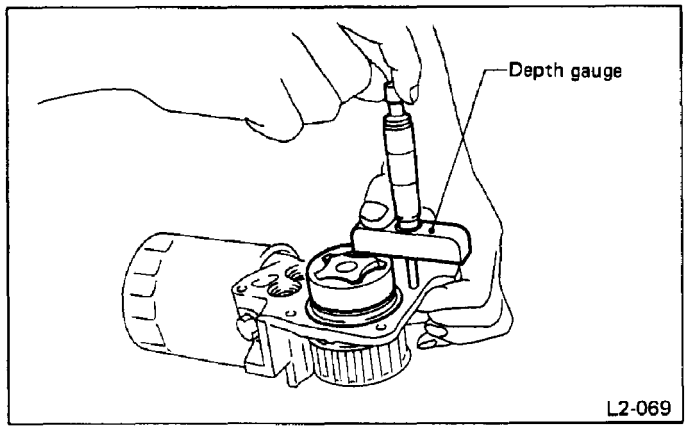

Fig. 14

2) Measure depth (L) of rotor housing bore in cylinder block.

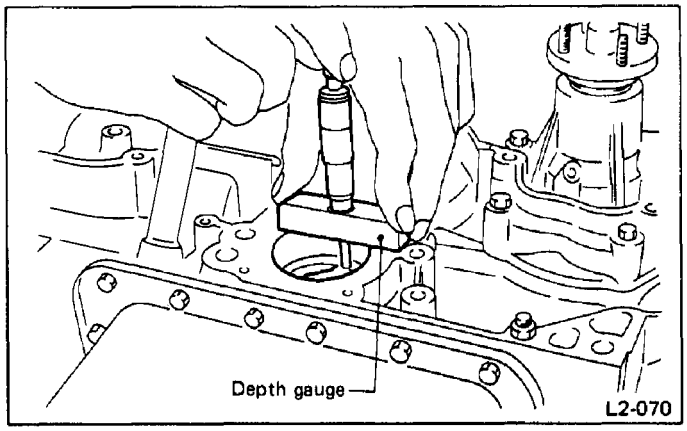

Fig. 15

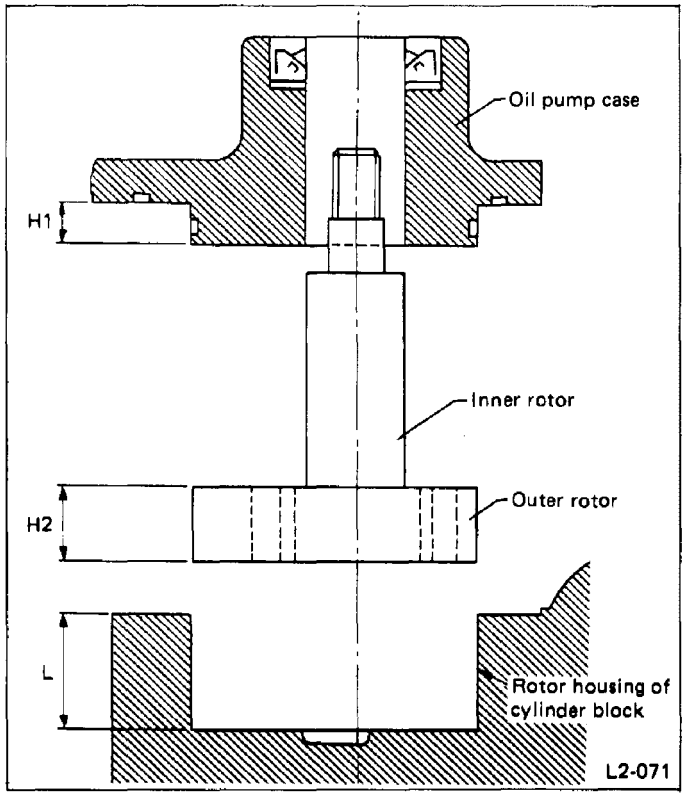

Fig. 16

3) Calculate side clearance (C) using the following equation:

$$C = L - (H1 + H2)$$

Side clearance: C
Standard
0.05 – 0.16 mm (0.0020 – 0.0063 in)
Limit
0.18 mm (0.0071 in)

4) If side clearance value (C) is larger than "Limit" shown below, replace pump inner and outer rotors with the suitable ones selected from following table.

Inner and Outer Rotor Height (H2)		
Marking	1800 cc	2700 cc
A	13.89 – 13.91 mm (0.5468 – 0.5476 in)	18.89 – 18.91 mm (0.7437 – 0.7445 in)
B	13.90 – 13.92 mm (0.5472 – 0.5480 in)	18.90 – 18.92 mm (0.7441 – 0.7449 in)
C	13.91 – 13.93 mm (0.5476 – 0.5484 in)	18.91 – 18.93 mm (0.7445 – 0.7453 in)

Height of case projection: H1
1800 cc model
7.97 – 8.00 mm (0.3138 – 0.3150 in)
2700 cc model
2.97 – 3.00 mm (0.1169 – 0.1181 in)
Depth of rotor housing: L
21.96 – 22.04 mm (0.8646 – 0.8677 in)

OIL RELIEF VALVE

Check the valve for fitting condition and damage, and the relief valve spring for damage and deterioration. Replace the parts if defective.

Relief valve spring
Free length
1800 cc model: 47.1 mm (1.854 in)
2700 cc model: 52.2 mm (2.055 in)
Installed length
1800 cc model: 33.5 mm (1.319 in)
2700 cc model: 38.9 mm (1.531 in)
Load when installed
1800 cc model:
3.88 – 4.28 kg (8.56 – 9.44 lb)
2700 cc model:
6.15 – 6.75 kg (13.56 – 14.88 lb)

OIL PUMP CASE

Check the oil pump case for worn shaft hole, clogged oil passage, worn rotor chamber, cracks, and other faults.

OIL SEAL

Check the oil seal lips for deformation, hardening, wear, etc. and replace if defective.

ASSEMBLY AND INSTALLATION

Assembly and installation is in the reverse order of removal procedure.

Observe the following:

1) Replace the O-ring and gaskets with a new one.
2) Coat rubber seal of oil filter with engine oil before installing the oil filter.
3) Tighten oil filter an extra 2/3 turn after rubber seal contacts pump case. Do not tighten excessively.

TROUBLESHOOTING

Before troubleshooting, make sure that the engine oil level is correct and no oil leakage exists.

	Trouble	Possible cause		Corrective action
Oil pressure indicator light equipped model	1. Warning light remains on.	1) Oil pressure switch failure	Cracked diaphragm	Replace.
			Oil leakage within switch	Replace.
		2) Low oil pressure	Clogged oil filter	Replace.
			Malfunction of oil bypass valve	Clean or replace.
			Malfunction of oil relief valve	Clean or replace.
			Clogged oil passage	Clean.
			Excessive tip clearance and side clearance of oil pump rotor and gear	Replace.
			Clogged oil strainer or broken pipe	Clean or replace.
		3) No oil pressure	Insufficient engine oil	Replenish.
			Broken pipe of oil strainer	Replace.
			Stuck oil pump drive gear and rotor	Replace.
	2. Warning light does not go on.	1) Burnt-out bulb		Replace.
		2) Poor contact of switch contact points		Replace.
		3) Disconnection of wiring		Repair.
	3. Warning light flickers momentarily.	1) Poor contact at terminals		Repair.
		2) Defective wiring harness		Repair.
		3) Low oil pressure		Check for the same possible causes as listed in 1.–2)
Oil pressure gauge equipped model	4. Oil pressure gauge indication is erroneous.	1) Poor contact at terminals		Repair.
		2) Deformed bimetal		Replace.
		3) Binding of needle pointer		Repair.
		4) Contaminated points		Replace.
		5) Low oil pressure		Check for the same possible causes as listed in 1.–2)
	5. Oil pressure gauge does not deflect.	1) Needle pointer out of place		Repair.
		2) Heat wire disconnection		Replace.
		3) Disconnection of wiring		Repair.
		4) Cracked sensor diaphragm		Replace.
		5) Low oil pressure		Check for the same possible causes as listed in 1.–2)

ENGINE COOLING SYSTEM

2-5

SUBARU

1988

	Page
MECHANISM AND FUNCTION	2
General	2
Cooling Lines	2
Thermostat	3
Thermometer	3
SPECIFICATIONS AND SERVICE DATA	4
Specifications	4
Service Data	5
COMPONENT PARTS	6
Water Pump	6
Radiator and Cooling Fan	8
SERVICE PROCEDURE	10
Water Pump	10
Thermostat	12
Thermometer	12
Radiator	13
Cooling Fan and Fan Motor	15
TROUBLESHOOTING	16

MECHANISM AND FUNCTION

General

The engine cooling system consists of a cross-flow radiator, a reserve tank, an electric motor fan, a water pump, a thermostat, and a thermometer.

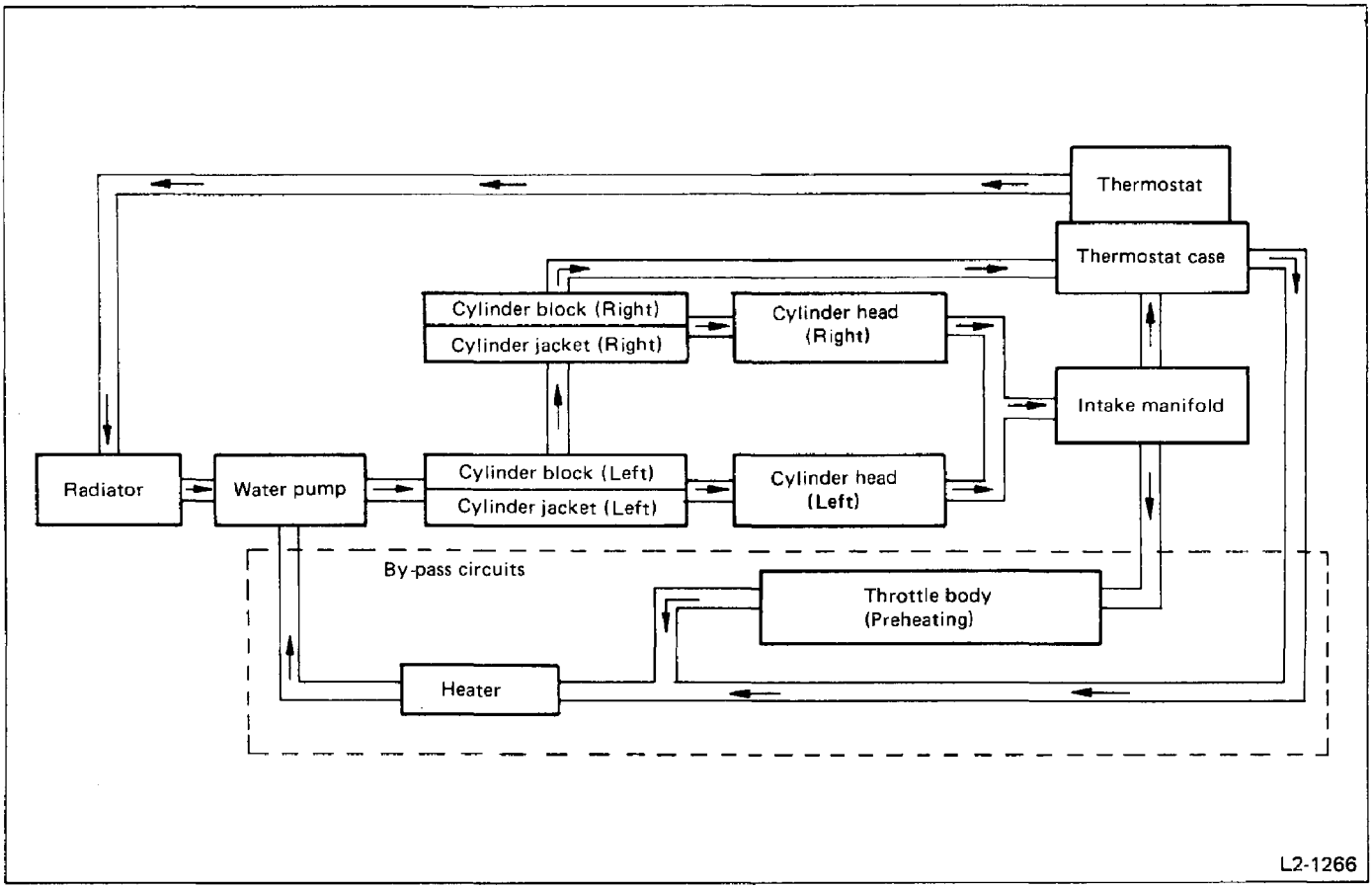

Fig. 1

Cooling Lines

This cooling system operates in three steps depending on the temperature of the coolant flowing through the cooling circuit.

1) 1st step ... With thermostat closed

At coolant temperature of below 88°C (190°F), the thermostat remains closed and the coolant flows through the bypass and heater circuits.

This permits the engine to warm up quickly.

2) 2nd step ... With thermostat opened

When the coolant temperature is above 88°C (190°F), the thermostat opens and the coolant flows through the radiator where it is cooled.

3) 3rd step ... With electric cooling fan operating

When the coolant temperature rises above 95°C (203°F), the thermoswitch is turned on and the electric cooling fan rotates.

Thermostat

1800 cc model

The thermostat is powered to open the valve by a totally-enclosed wax pellet which expands with increased temperature. It provides the sure open-close operation of the valve and features high durability.

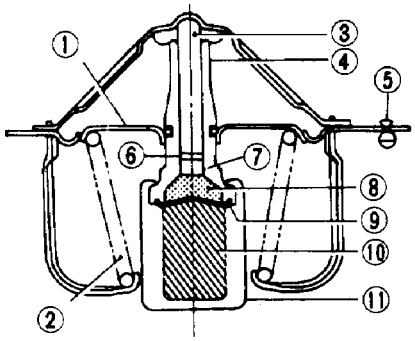

1 Valve
2 Spring
3 Piston
4 Guide
5 Jiggle pin
6 Teflon sheet
7 Rubber piston
8 Semifluid
9 Diaphragm
10 Wax
11 Temperature sensing case

A7-078

Fig. 2

2700 cc model

The thermostat is a wax-pellet type. It is equipped with a main valve and a sub-valve. Before the main valve opens, the sub-valve opens to prevent abrupt pressure variations.

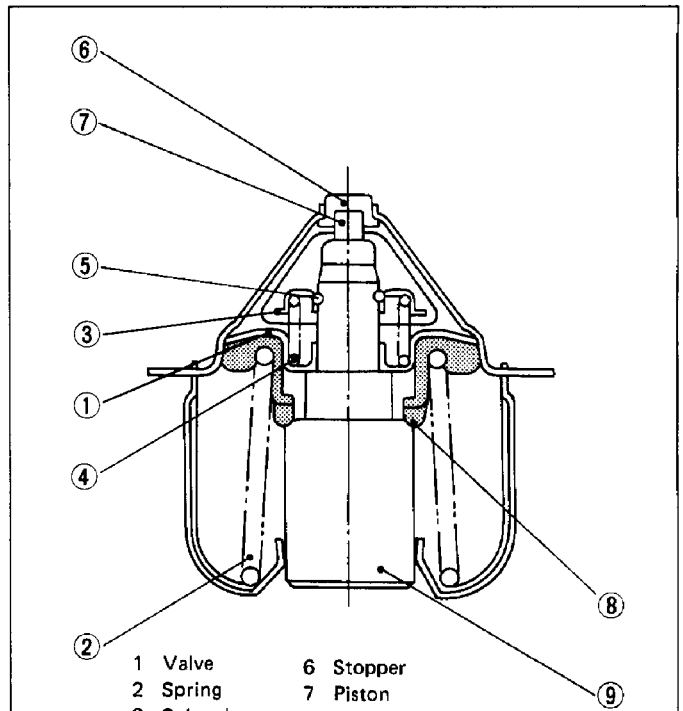

1 Valve
2 Spring
3 Sub valve
4 Sub spring
5 Stop ring
6 Stopper
7 Piston
8 Dust seal valve
9 Wax element

L2-1267

Fig. 3

Thermometer

The thermometer is installed on the intake manifold and monitors the temperature of the coolant in the engine to activate the temperature gauge in the combination meter. The thermometer includes a thermistor, lead wire, spring, terminal plate and resin body, completely sealed by a threaded case which is integral with a hexagon nut.

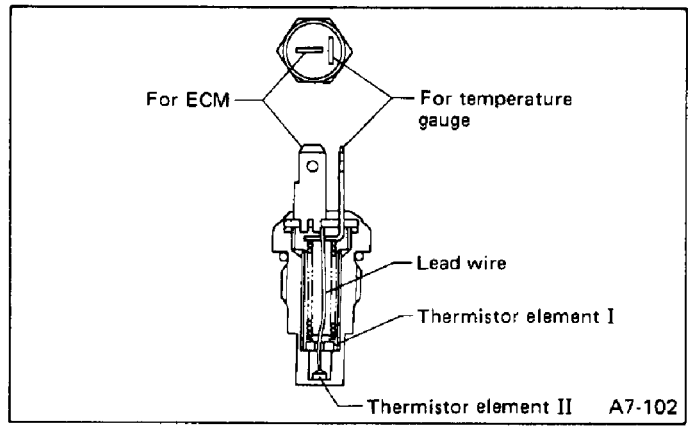

Fig. 4

SPECIFICATIONS AND SERVICE DATA

SPECIFICATIONS

Cooling system			Electric fan + Forced cooling water circulation system	
Model			1800 cc	2700 cc
Total coolant capacity			5.5 ℓ (5.8 US qt, 4.8 Imp qt)	7.0 ℓ (7.4 US qt, 6.2 Imp qt)
Water pump	Type		Centrifugal impeller type	
	Discharge performance I	Discharge	7 ℓ/min (7.4 US qt/min, 6.2 Imp qt/min) or more	20 ℓ/min (21.1 US qt/min, 17.6 Imp qt/min) or more
		Pump speed - total water head	1,000 rpm - 0.29 m Aq (0.95 ft Aq)	3,000 rpm - 2m Aq (7 ft Aq)
		Water temperature	75 – 85°C (167 – 185°F)	
	Discharge performance II	Discharge	50 ℓ (13.2 US gal, 11.0 Imp gal)/min or more	160 ℓ (42.3 US gal, 35.2 Imp gal)/min or more
		Pump speed - total water head	4,000 rpm - 5.0 m Aq (16.4 ft Aq)	8,000 rpm - 16 m Aq (52 ft Aq)
		Water temperature	75 – 85°C (167 – 185°F)	
	Impeller diameter		66 mm (2.60 in)	62 mm (2.44 in)
	Number of impeller vanes		5	
	Pump pulley diameter		90 mm (3.54 in)	88 mm (3.46 in)
Thermostat	Type		Wax pellet type	
	Starts to open		86.5 – 89.5°C (188 – 193°F)	Sub-valve 86 – 90°C (187 – 194°F) Main valve 90 – 94°C (194 – 201°F)
	Fully opens		100°C (212°F)	102°C (216°F)
	Valve lift		8.5 mm (0.335 in)	Sub-valve 1.5 mm (0.059 in) Main valve 6.5 mm (0.256 in)
	Valve bore		31 mm (1.22 in)	Sub-valve 14 mm (0.55 in) Main valve 33 mm (1.30 in)
Thermoswitch	Type		Bimetal type	
	Operation temperature		ON: 92 – 98°C (198 – 208°F) Differential: 5 – 9°C (9 – 16°F)	

Model		1800 cc	2700 cc
Electric fan	Motor	120 W or les	140 W or less
	Fan dia.	280 mm (11.02 in)	340 mm (13.39 in)
Radiator	Type	Cross-flow, pressurized type	
	Radiation capacity	49.893 kW (42,900 kcal/h, 170,227 BTU/h)	56.522 kW (48,600 kcal/h, 192,845 BTU/h)
	Core dimensions	670 x 332 x 16 mm (26.38 x 13.07 x 0.63 in)	645 x 322 x 32 mm (25.39 x 12.68 x 1.26 in)
	Pressure range in which cap valve is open	Above 78 – 98 kPa (0.8 – 1.0 kg/cm^2, 11 –14 psi) Below –4.9 to –9.8 kPa (–0.05 to –0.1 kg/cm^2, –0.7 to –1.4 psi)	
	Fins	Corrugated fin type	
Reserve tank	Capacity	1.3 ℓ (1.4 US qt, 1.1 Imp qt)	2.3 ℓ (2.4 US qt, 2.0 Imp qt)

SERVICE DATA

Model		1800 cc	2700 cc
Water pump	Clearance between impeller and case	0.5 – 0.9 mm (0.020 – 0.035 in)	
	Distance between pulley attaching surface of hub and pump case surface, which mates with gasket	103.6 – 104.2 mm (4.08 – 4.10 in)	113.8 – 114.2 mm (4.48 – 4.50 in)

COMPONENT PARTS

Water Pump

1800 cc model

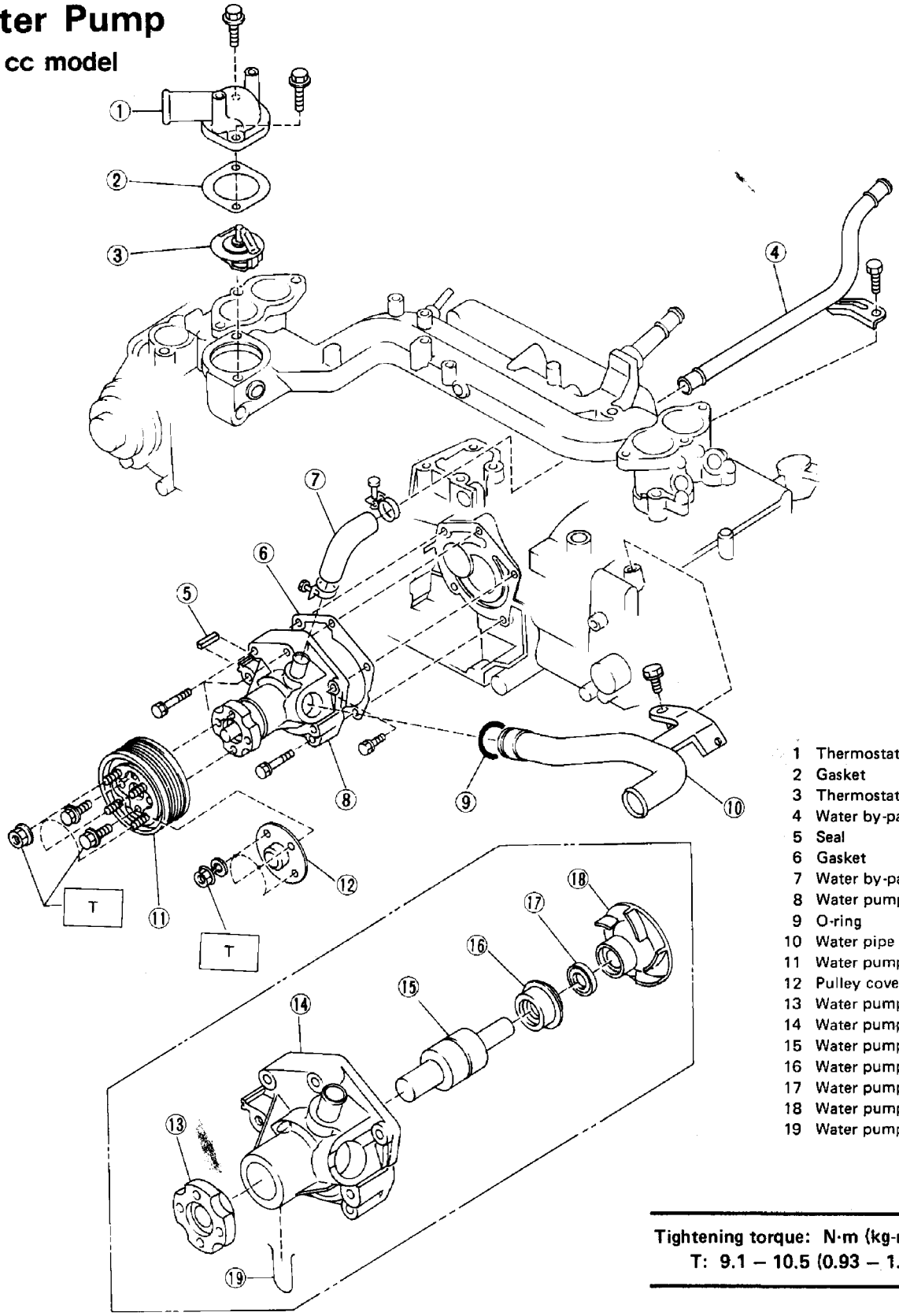

1 Thermostat cover
2 Gasket
3 Thermostat
4 Water by-pass pipe
5 Seal
6 Gasket
7 Water by-pass hose
8 Water pump ASSY
9 O-ring
10 Water pipe
11 Water pump pulley
12 Pulley cover
13 Water pump hub
14 Water pump case
15 Water pump shaft
16 Water pump mechanical seal
17 Water pump plate
18 Water pump impeller
19 Water pump clip

Tightening torque: N·m (kg-m, ft-lb)
T: 9.1 – 10.5 (0.93 – 1.07, 6.7 – 7.7)

Fig. 5

L2-1268

2700 cc model

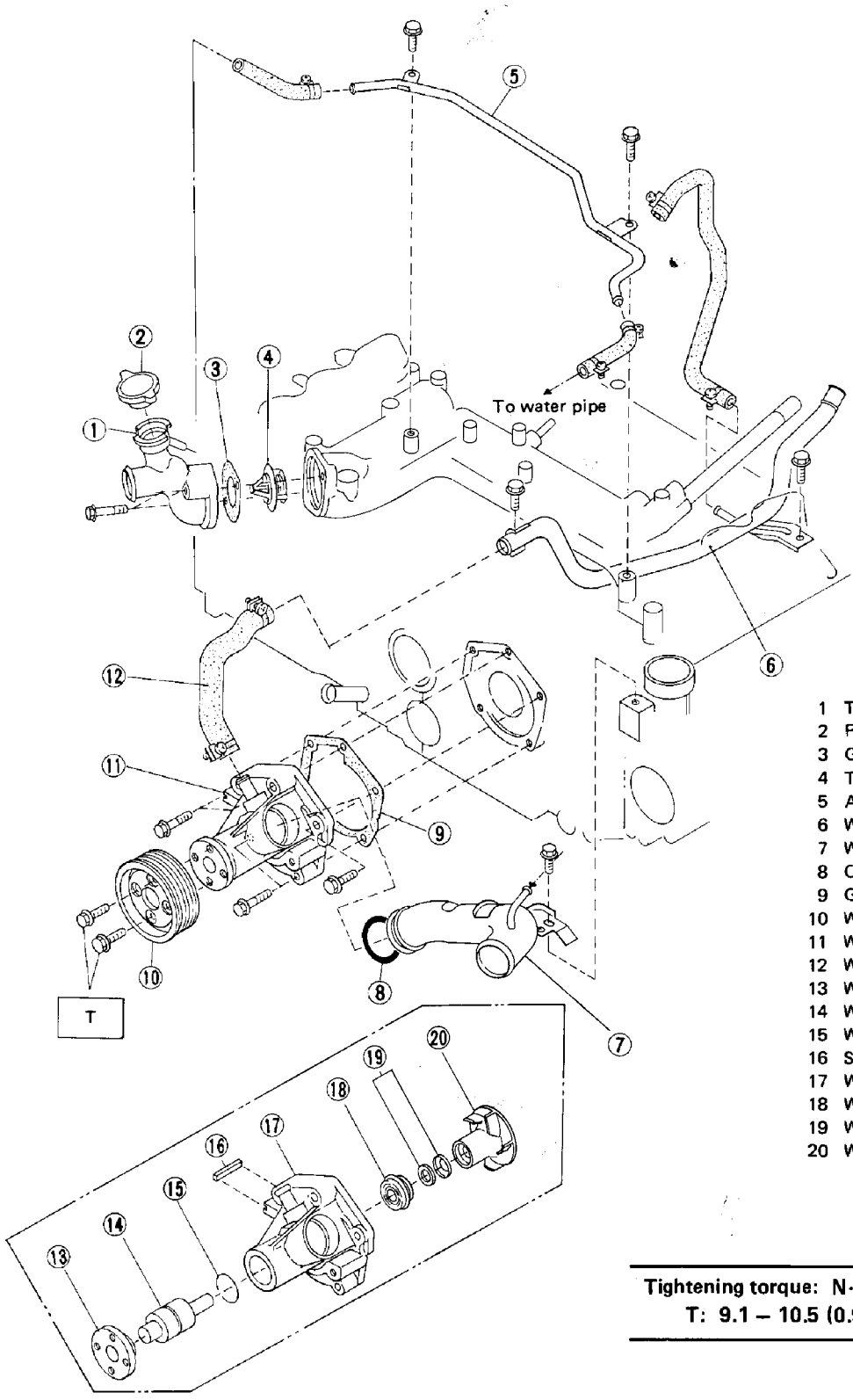

1 Thermostat cover
2 Filler cap
3 Gasket
4 Thermostat
5 Air vent pipe
6 Water by-pass pipe
7 Water pipe
8 O-ring
9 Gasket
10 Water pump pulley
11 Water pump ASSY
12 Water by-pass hose
13 Water pump hub
14 Water pump shaft
15 Water pump clip
16 Seal
17 Water pump case
18 Water pump mechanical seal
19 Water pump plate
20 Water pump impeller

Tightening torque: N·m (kg-m, ft-lb)
T: 9.1 – 10.5 (0.93 – 1.07, 6.7 – 7.7)

Fig. 6

L2-1269

Radiator and Cooling Fan

1800 cc model

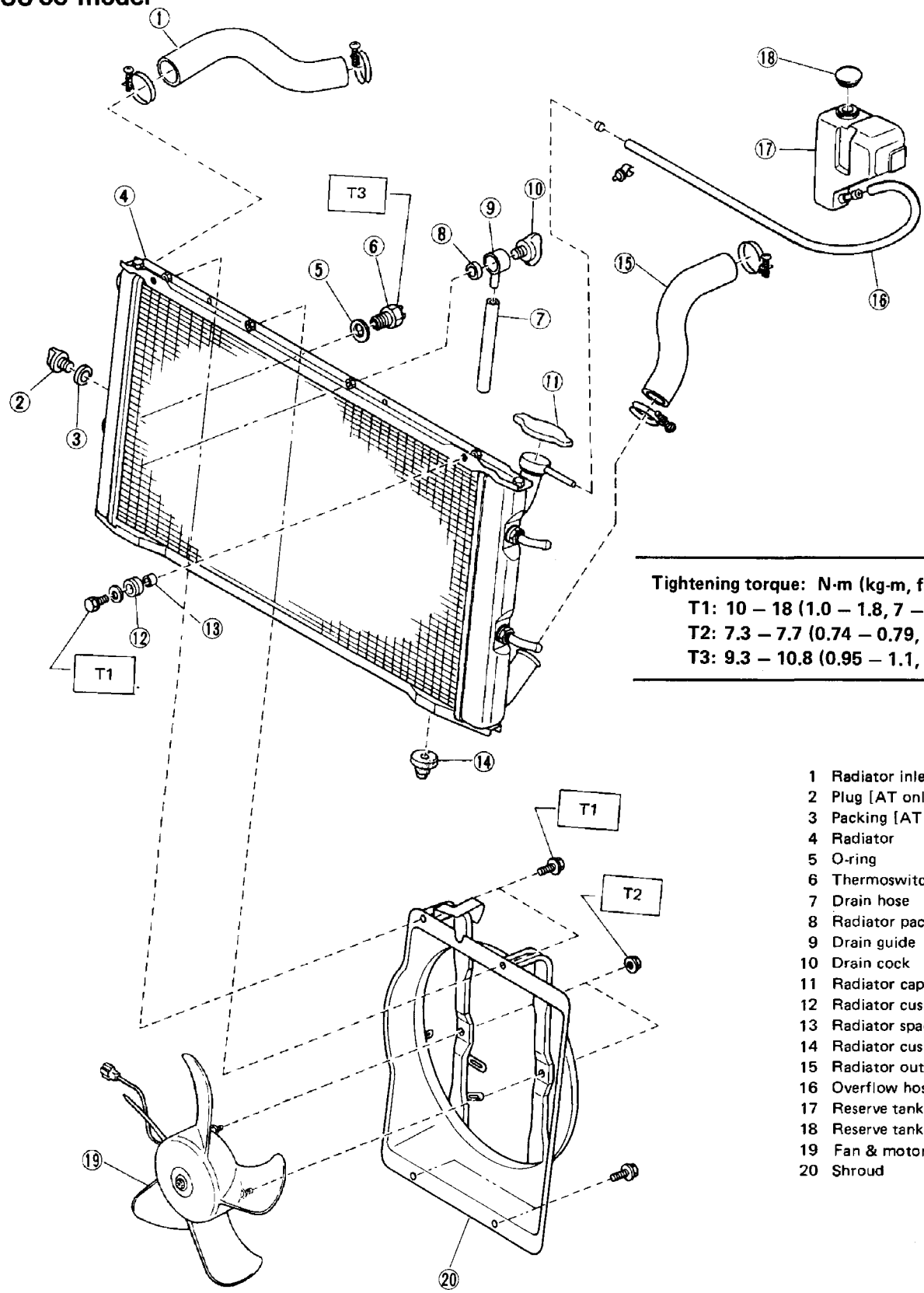

Tightening torque: N·m (kg-m, ft-lb)
T1: 10 – 18 (1.0 – 1.8, 7 – 13)
T2: 7.3 – 7.7 (0.74 – 0.79, 5.4 – 5.7)
T3: 9.3 – 10.8 (0.95 – 1.1, 6.9 – 8.0)

1 Radiator inlet hose
2 Plug [AT only]
3 Packing [AT only]
4 Radiator
5 O-ring
6 Thermoswitch
7 Drain hose
8 Radiator packing
9 Drain guide
10 Drain cock
11 Radiator cap
12 Radiator cushion
13 Radiator spacer
14 Radiator cushion
15 Radiator outlet hose
16 Overflow hose
17 Reserve tank
18 Reserve tank cap
19 Fan & motor
20 Shroud

Fig. 7

L2-1270

2700 cc model

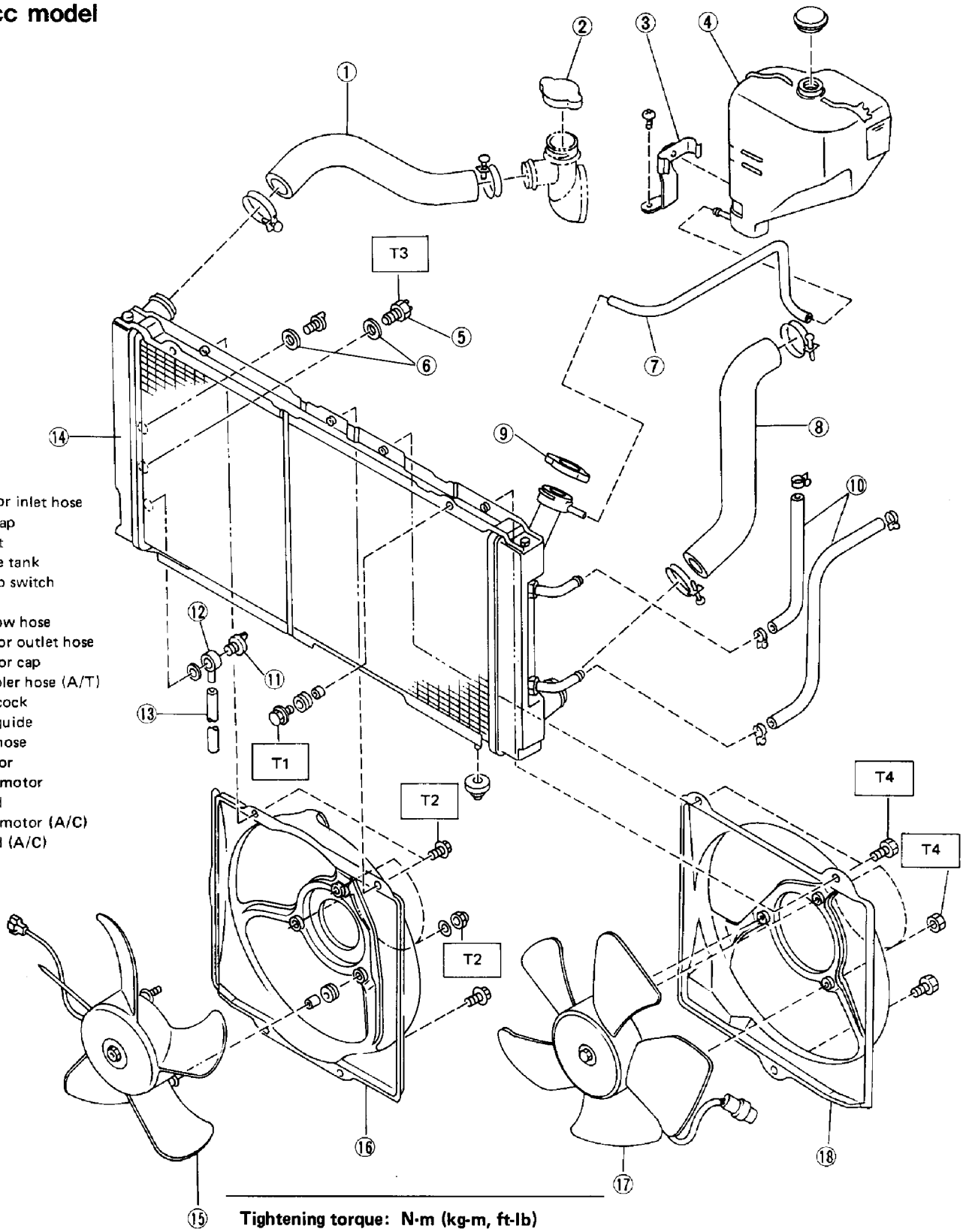

1 Radiator inlet hose
2 Filler cap
3 Bracket
4 Reserve tank
5 Thermo switch
6 O-ring
7 Overflow hose
8 Radiator outlet hose
9 Radiator cap
10 Oil cooler hose (A/T)
11 Drain cock
12 Drain guide
13 Drain hose
14 Radiator
15 Fan & motor
16 Shroud
17 Fan & motor (A/C)
18 Shroud (A/C)

Tightening torque: N·m (kg-m, ft-lb)
T1: 10 – 18 (1.0 – 1.8, 7 – 13)
T2: 7.3 – 7.7 (0.74 – 0.79, 5.4 – 5.7)
T3: 9.3 – 10.8 (0.95 – 1.1, 6.9 – 8.0)
T4: 5 – 10 (0.5 – 1.0, 3.6 – 7.2)

Fig. 8 L2-1271

SERVICE PROCEDURE

Water Pump

REMOVAL

1) Drain coolant and disconnect the radiator outlet hose, water by-pass hose and air vent hose (2700 cc model only) from the water pump.
2) Loosen pulley nuts so that they can be turned by hand.
3) Loosen alternator ASSY mounting bolts (1800 cc model). Loosen belt tensioner pulley locking nut (2700 cc model).
4) Remove drive belt.
5) Remove front belt cover. Refer to 2-3 "Engine Disassembly" for procedures.

Be careful not to spill coolant on drive belt. If spilled, wipe clean immediately.

DISASSEMBLY

a. Do not disassemble water pump unless absolutely necessary. It is advisable to replace water pump ASSY.
b. In case of disassembling water pump, be sure to check "runout" of water pump hub after assembling. If it is outside specifications, replace water pump ASSY.

1) Remove water pump pulley.
2) Insert a screwdriver into the slit in water pump case and lift end of water pump clip.

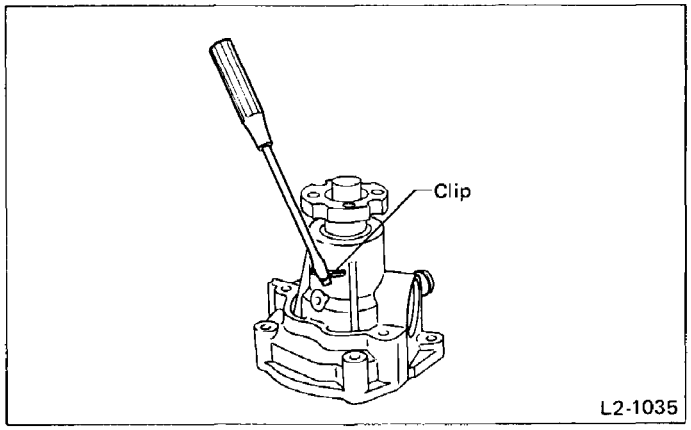

Fig. 9

3) Extract water pump clip with pliers.
4) Using a press, drive hub from water pump ASSY.

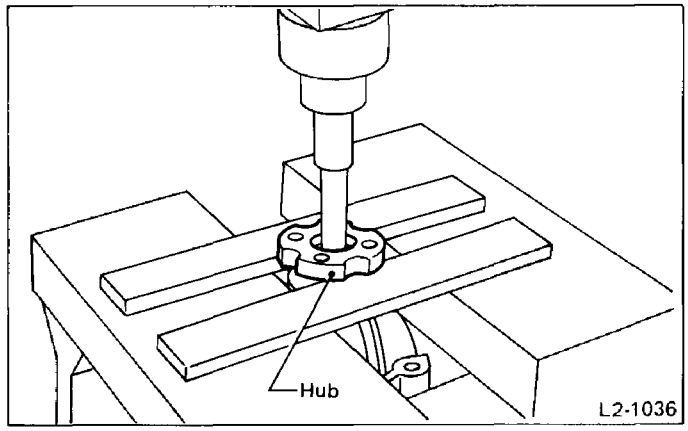

Fig. 10

5) Remove shaft, impeller, and mechanical seal from water pump case as a unit.

Do not press the shaft, or the bearings will be damaged. Press the bearing outer race.

6) Remove impeller from shaft with a press.

INSPECTION

1) Clean all the disassembled parts thoroughly.
2) Inspect the pump shaft for wear, damage, and operation.
3) Inspect the impeller surface that contacts the mechanical seal for wear and damage.
4) Inspect the mechanical seal and plate for wear, crack and damage.
5) Inspect the other parts for crack, wear and damage, and replace if defective.

ASSEMBLY

1) Heat water pump case to a temperature of 80 to 100°C, (176 to 212°F), and press shaft into bore in water pump case. Do not press any section other than outer race.

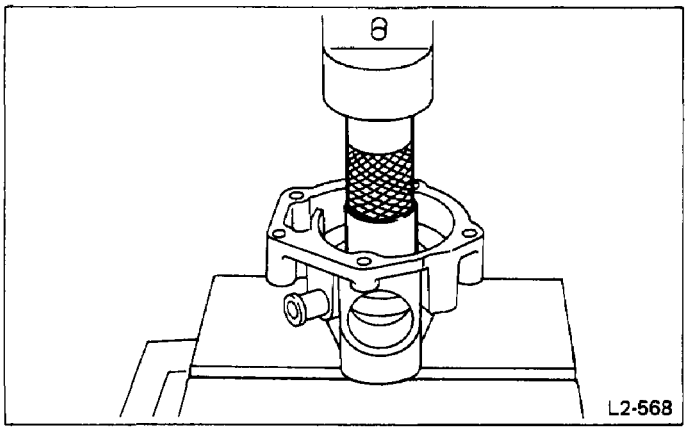

Fig. 11

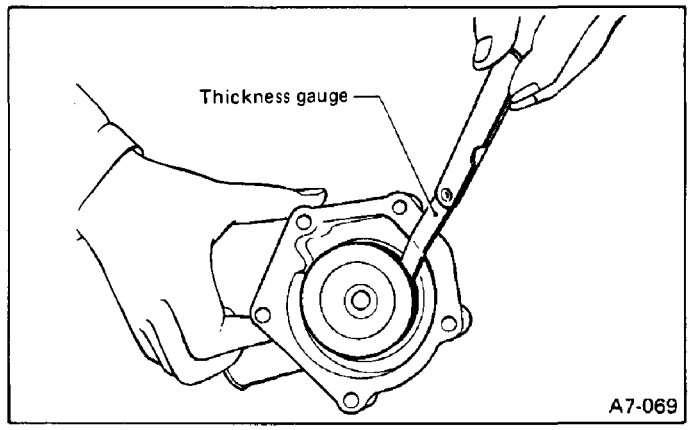

Fig. 13

Be sure to install a new mechanical seal.

2) Press the seal into the pump case with the carbon washer of the seal facing the impeller.

3) Apply coolant on the sliding surface between mechanical seal and impeller.

With a thin coat of oil on the shaft surface, install the impeller onto the pump shaft with a press.

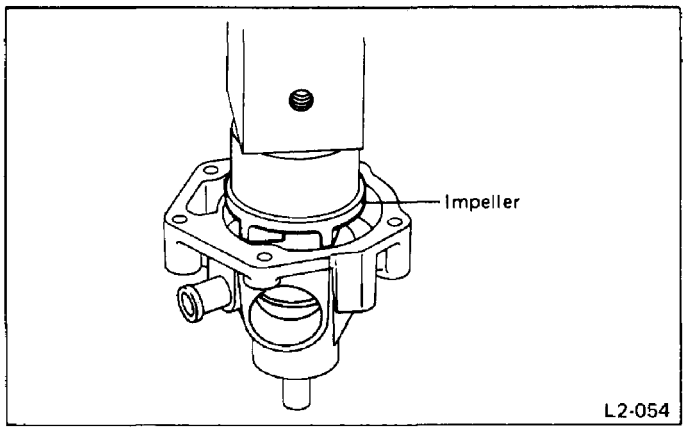

Fig. 12

4) Check for the following clearance after installation and correct if defective.

Clearance between impeller and pump case:
0.5 – 0.9 mm (0.020 – 0.035 in)

5) Before pressing, apply oil on the pump shaft.

Support the impeller side of the pump shaft end and install the hub by using a press until the distance "L" between the pump case surface, which mates with the gasket, and the pulley attaching surface of the hub becomes specified value.

After pressing water pump hub into place, measure "runout". If it exceeds 0.05 mm (0.0020 in), replace water pump ASSY.

"L":

1800 cc model	**103.6 – 104.2 mm (4.08 – 4.10 in)**
2700 cc model	**113.8 – 114.2 mm (4.48 – 4.50 in)**

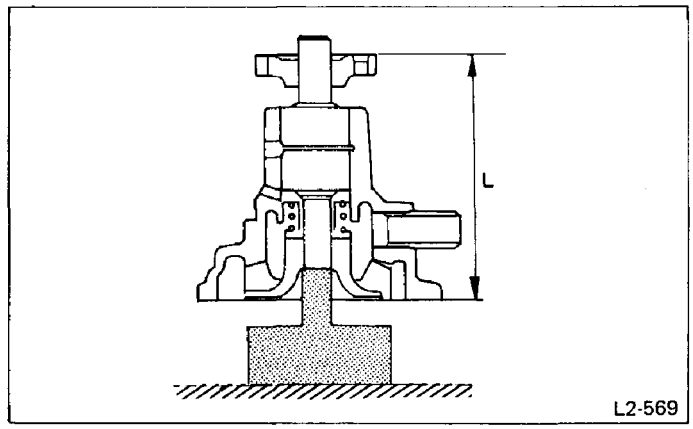

Fig. 14

6) Looking through slit in water pump case, ensure that groove on water pump case is aligned with groove on outer surface of shaft.

Insert water pump clip into grooves and drive it into place with a plastic hammer.

Be careful not to deform the clip.

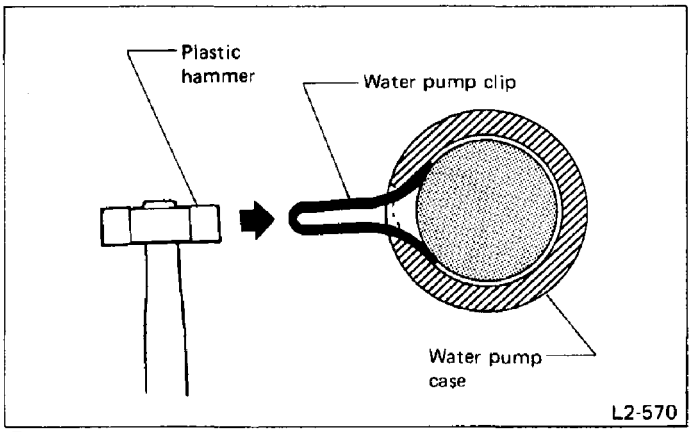

Fig. 15

7) Rotate water pump shaft by hand. It should turn smoothly without emitting noise.

INSTALLATION

Installation is in the reverse order of removal procedures. Observe the following:

1) Replace the gasket with a new one.
2) After reinstalling the water pump, adjust the drive belt tension and run the engine to make sure that neither water leakage nor abnormal noise exists.

Thermostat

REMOVAL AND INSTALLATION

1) Remove the thermostat case cover and gasket, and pull out the thermostat.
2) Install the thermostat in the intake manifold, and install the thermostat cover together with a gasket.

a. When reinstalling the thermostat, use a new gasket.
b. The thermostat must be installed with the jiggle pin upward. (1800 cc model only)

INSPECTION

Replace the thermostat if the valve does not close completely at an ambient temperature or if the following test shows unsatisfactory results.

Immerse the thermostat and a thermometer in water. Raise water temperature gradually, and measure the temperature and valve lift when the valve begins to open and when the valve is fully opened. During the test, agitate the water for even temperature distribution. The measurement should be to the specification.

		Starts to open	Fully opens
1800 cc		86.5 – 89.5°C (188 – 193°F)	100°C (212°F)
2700 cc	Sub-valve	86 – 90°C (187 – 194°F)	102°C (216°F)
	Main valve	90 – 94°C (194 – 201°F)	

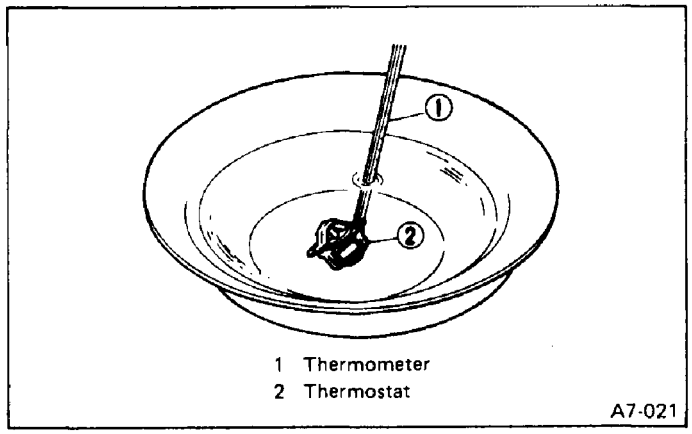

Fig. 16

Thermometer

INSPECTION

1) To test the thermometer, connect the gauge section and the sensor unit in series.
2) The thermometer performance data are shown below.

Temperature	Resistance
[120°C (248°F)]	14.9 – 17.3Ω
100°C (212°F)	26.2 – 29.3Ω
80°C (176°F)	47.5 – 56.8Ω
[50°C (122°F)]	133.9 – 178.9Ω

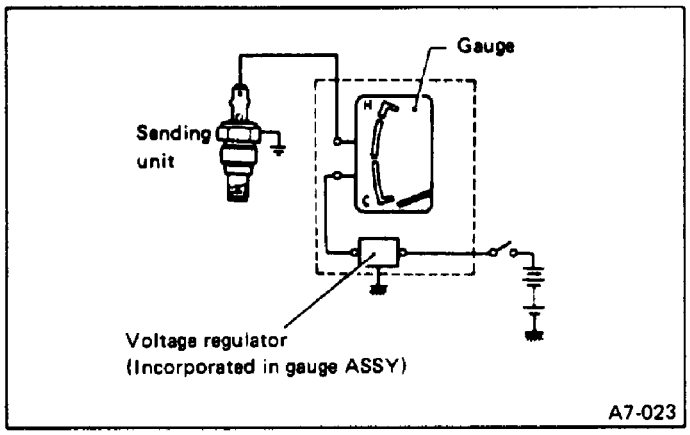

Fig. 17

PRECAUTIONS FOR HANDLING

1) When testing, do not apply battery voltage directly to the temperature gauge or sensor unit, because these two parts are designed to be connected in series.
If the battery voltage is applied to only one of them, the heating wire on gauge or thermistor may be damaged.
2) Connect the wire firmly to the terminals. When the gauge reading is abnormal, inspect not only the gauge but also the grounding wire or the terminal for loose connections.
3) Use care not to short or ground the terminals or wirings, otherwise troubles described in 1) may occur.
4) Use care not to drop or strike either the gauge or unit, since these are precision products.
5) Make sure that the gauge needle indicates C when the ignition switch is not turned on.

Radiator

REMOVAL

1) Disconnect ground cable from battery terminal.
2) Drain coolant.
3) Loosen hose clamps and disconnect both inlet and outlet hoses from radiator.

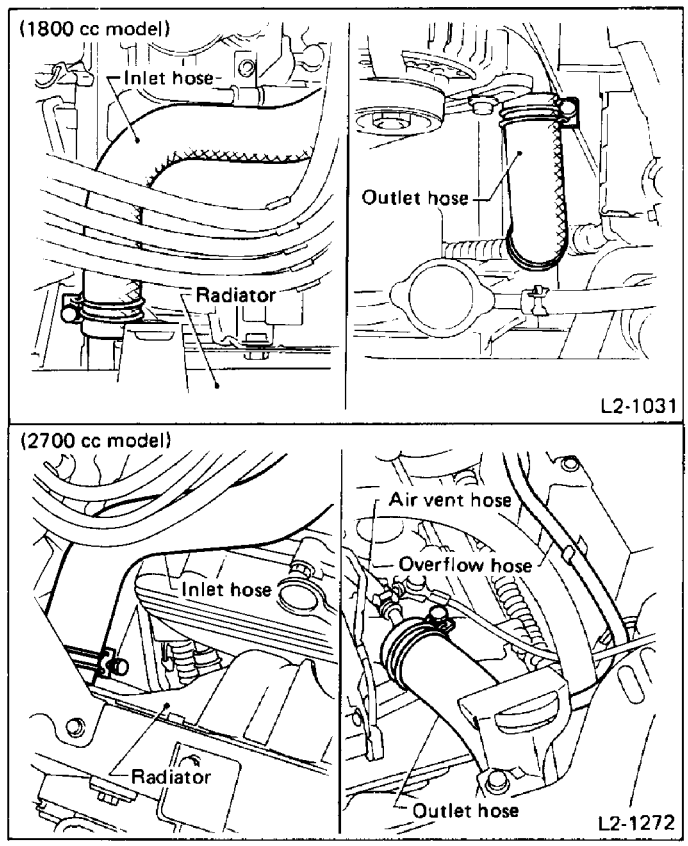

Fig. 18

4) Disconnect oil cooler's inlet and outlet hoses at radiator location (A/T model).

Catch both coolant and oil remained in the hoses into containers.

5) Disconnect main harness connector from thermoswitch.

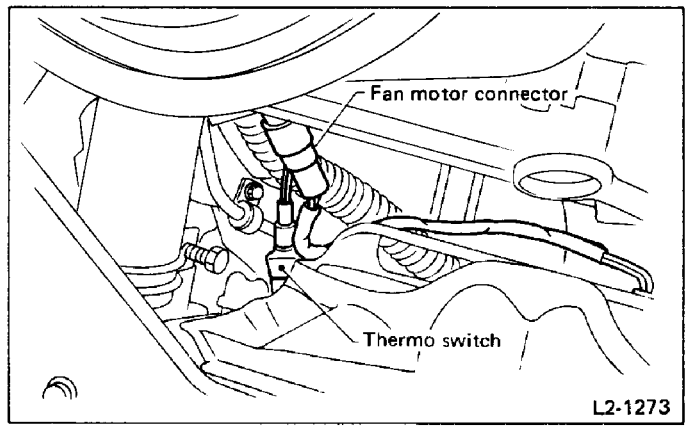

Fig. 19

6) Disconnect lead wire connector from fan motor.

(2700 cc model only)

a. Disconnect lead wire connector from sub (condenser) fan motor.
b. Remove lower and upper bolts holding shrouds (sub and main fan) to radiator.

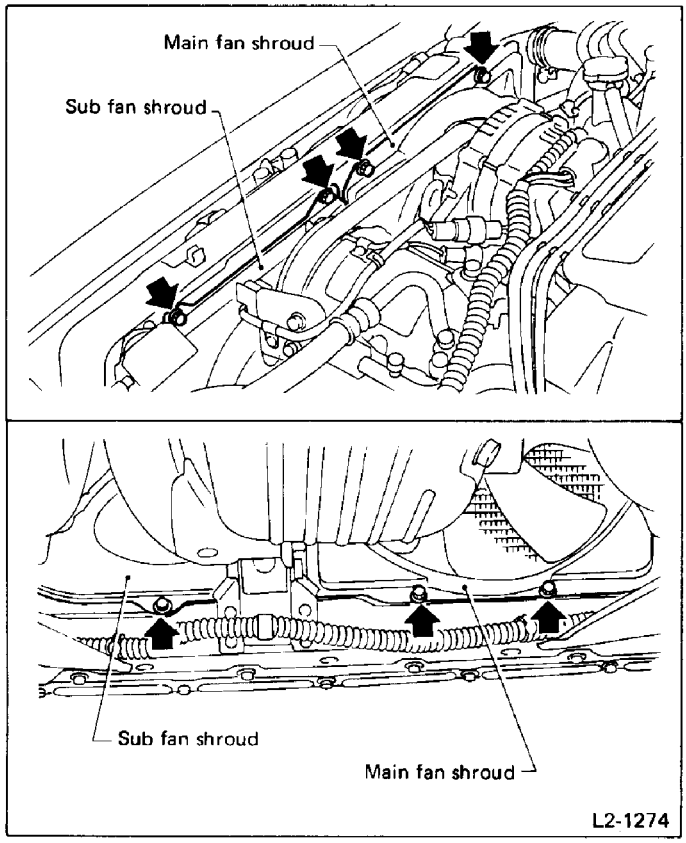

Fig. 20

c. Remove sub and main fan shroud with motor ASSY.

7) Remove two radiator mounting bolts.

8) Lift radiator up and away from vehicle with radiator cap facing up to prevent remaining coolant from spilling.

INSPECTION

Check all removed parts and replace if defective.

1) A clogged radiator should be cleaned.
2) A deteriorated hose should be replaced.
3) Check the valve opening pressure of the pressure cap with a cap tester. If the pressure is out of specification, replace the cap ASSY.

Cap valve opening pressure:
Positive pressure side
78 – 98 kPa
(0.8 – 1.0 kg/cm², 11 – 14 psi)
Negative pressure side
−4.9 to −9.8 kPa
(−0.05 to −0.1 kg/cm², −0.7 to −1.4 psi)

INSTALLATION

1) Attach radiator mounting cushions to pins on the lower side of radiator.

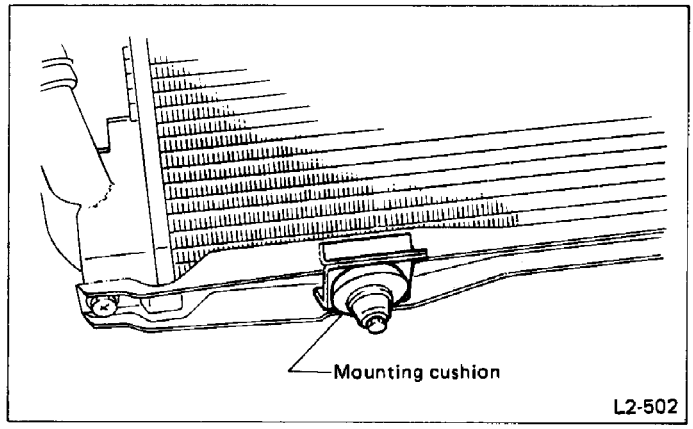

Fig. 21

2) Fit cushions, on lower side of radiator, into holes on body side and install radiator.

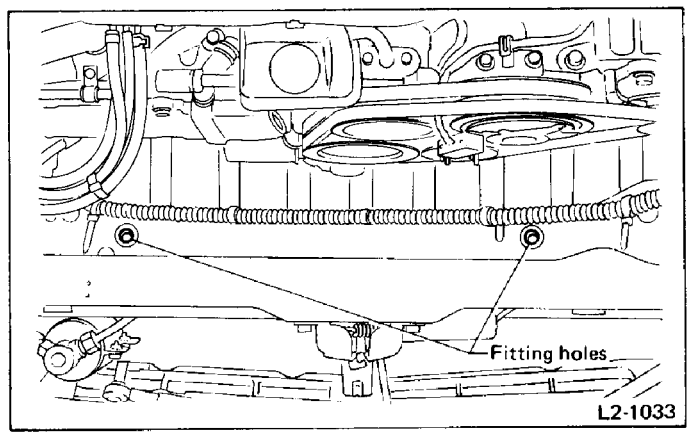

Fig. 22

3) Tighten two radiator mounting bolts.

Tightening torque:
10 – 18 N·m (1.0 – 1.8 kg-m, 7 – 13 ft-lb)

4) Install sub and main fan shroud on radiator (2700 cc model only).

Tightening torque:
Lower and upper bolt
7.3 – 7.7 N·m
(0.74 – 0.79 kg-m, 5.4 – 5.7 ft-lb)

5) Connect main harness connector to thermoswitch.
6) Connect lead wire connector to fan motor.
7) Connect both inlet and outlet hoses to radiator with marked sides facing up and tighten with hose clamps.

Be careful not to twist hoses.

8) Connect both inlet and outlet hoses to radiator's oil cooler and tighten with hose clamps (A/T model).
9) Pour coolant into radiator.
10) Connect ground cable to battery terminal.

Cooling Fan and Fan Motor

REMOVAL

1) Disconnect ground cable from battery terminal.
2) Disconnect lead wire connector.
3) Remove bolts holding shroud to radiator and detach shroud.

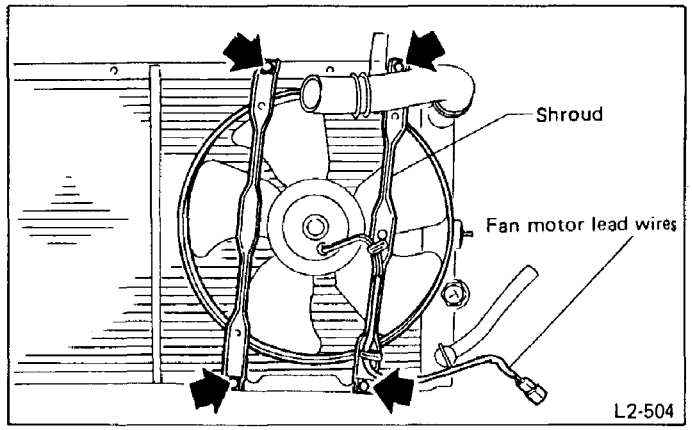

Fig. 23

4) Remove fan motor mounting nuts and detach fan motor from shroud.

Do not separate fan motor and fan as they are balanced properly.

INSTALLATION

Installation is in the reverse order of removal procedures. Observe the following:
1) Before installing cooling fan motor, apply a coat sealant to threads and tighten nuts.

Tightening torque:
Fan motor to shroud
7.3 – 7.7 N·m
(0.74 – 0.79 kg-m, 5.4 – 5.7 ft-lb)

2) Make sure cooling fan does not come into contact with shroud when installed.
3) After installation, make sure there is no unusual noise or vibration when fan is rotated.

TROUBLESHOOTING

Trouble	Possible cause	Corrective action
Over-heating	a. Insufficient coolant.	Replenish coolant, inspect for leakage, and repair.
	b. Loose drive belt.	Adjust drive belt tension.
	c. Oil on drive belt.	Replace.
	d. Malfunction of thermostat.	Replace.
	e. Malfunction of water pump.	Repair or replace.
	f. Clogged coolant passage.	Clean.
	g. Improper ignition timing.	Adjust.
	h. Clogged or leaking radiator.	Clean or repair, or replace.
	i. Improper engine oil.	Replace.
	j. Air-fuel mixture too thin.	Inspect and repair fuel system.
	k. Excessive back pressure in exhaust system.	Clean or replace.
	l. Insufficient clearance between piston and cylinder.	Adjust or replace.
	m. Improper valve clearance.	Adjust.
	n. Slipping clutch.	Repair or replace.
	o. Dragging brake.	Adjust.
	p. Improper transmission oil.	Replace.
	q. Defective thermostat.	Replace.
	r. Malfunction of electric fan.	Replace thermoswitch or motor.
Over-cooling	a. Atmospheric temperature extremely low.	Partly cover radiator front area.
	b. Defective thermostat.	Replace.
Coolant leaks	a. Loosened or damaged connecting units on hoses.	Repair or replace.
	b. Leakage from water pump.	Repair or replace.
	c. Leakage from intake manifold.	Repair or replace.
	d. Leakage around cylinder head gasket.	Retighten cylinder head nuts or replace gasket.
	e. Damaged or cracked cylinder head and crankcase.	Repair or replace.
	f. Damaged or cracked thermostat case.	Repair or replace.
	g. Leakage from radiator.	Repair or replace.
Noise	a. Defective drive belt.	Replace.
	b. Defective electric fan.	Replace.
	c. Defective water pump bearing.	Replace.
	d. Defective water pump mechanical seal.	Replace.

FUEL INJECTION SYSTEM

2-7

SUBARU

1988

	Page
MECHANISM AND FUNCTION	2
General	2
Air Flow Meter	2
Throttle Body	3
By-pass Air Control Valve	5
Auxiliary Air Valve	6
Ignition System	6
Air-Fuel Ratio Learning Control System	8
O_2 Sensor	8
Fuel Injector	9
Dropping Resistor	10
Coolant Thermosensor	10
Pressure Regulator	10
SCHEMATIC DRAWING	11
1800 cc Model	11
2700 cc Model	12
COMPONENT PARTS	13
Throttle Body and EGR Valve	13
Intake Manifold	15
Air Intake System	17
SERVICE PROCEDURE	18
Precautions in Servicing	18
Air Flow Meter	18
Throttle Body	21
By-pass Air Control Valve	23
Auxiliary Air Valve	24
Fuel Injector and Resistor	25
Coolant Thermosensor	29
Pressure Regulator	29
Air Intake System	29
TROUBLESHOOTING	30
General Troubleshooting Table	30
Self-diagnosis System	33
Troubleshooting Chart for Self-diagnosis System	50

MECHANISM AND FUNCTION

General

The Multi Point Fuel Injection (MPFI) system is a system that supplies the optimum air-fuel mixture to the engine for all the various operating conditions through the use of the latest electronic technology.

With this system fuel, which is pressurized at a constant pressure, is injected into the intake air passage of the cylinder head. The injection quantity of fuel is controlled by an intermittent injection system where the electro-magnetic injection valve (fuel injector) opens only for a short period of time, depending on the quantity of air required for one cycle of operation. In actual operation, the injection quantity is determined by the duration of an electric pulse applied to the fuel injector and this permits simple, yet highly precise metering of the fuel.

Further, all the operating conditions of the engine are converted into electric signals, and this results in additional features of the system, such as large improved adaptability, easier addition of compensating element, etc. The MPFI system also has the following features:

1) Reduced emission of harmful exhaust gases.
2) Reduced in fuel consumption.
3) Increased engine output.
4) Superior acceleration and deceleration.
5) Superior startability and warm-up performance in cold weather since compensation is made for coolant and intake air temperature.

Air Flow Meter

The MPFI system employs a hot-wire type air flow meter.

This air flow meter converts the amount of air taken into the engine into an electric signal by utilizing the heat transfer phenomenon between the incoming air and a heating resistor (hot wire) located in the air intake.

The features of this flow meter type are as follows:

1) High-altitude compensation is made automatically.
2) Quick response.
3) There are no moving parts.
4) It is compact.

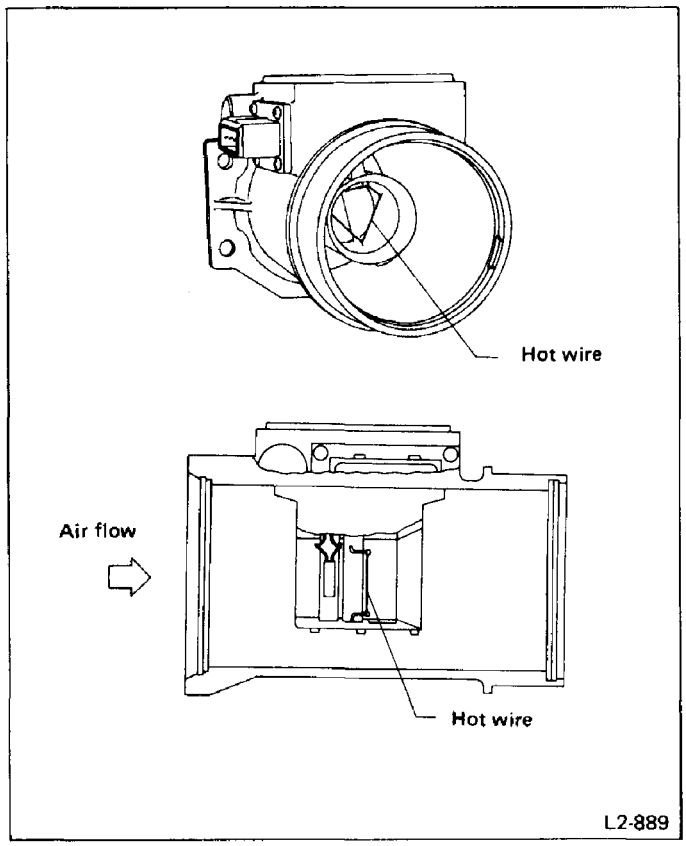

Fig. 1

Throttle Body

In response to the depressing stroke of the throttle pedal, the throttle body opens/closes its valve to regulate the air volume to be taken in the combustion chamber. Negative pressure (positive pressure at supercharging) generated according to the opening of the throttle valve is applied to the pressure port for canister purge. This pressure is used for controlling canister purge.

1800 cc model

During idling, the throttle valve is almost fully closed and the air flow through the throttle body is less than that passing through the carburetor. More than half of the air necessary for idling is supplied to the intake manifold via the idle bypass passage.

Turning the idle adjust screw on the idle bypass passage can change the air flow to adjust the number of revolutions in idling. Further, to prevent the number of revolutions from decreasing while the air conditioner is turned on, the fast idle bypass passage is provided which has the valve operated by the fast idle solenoid.

The fast idle engine rpm can be adjusted by turning the fast idle adjusting screw.

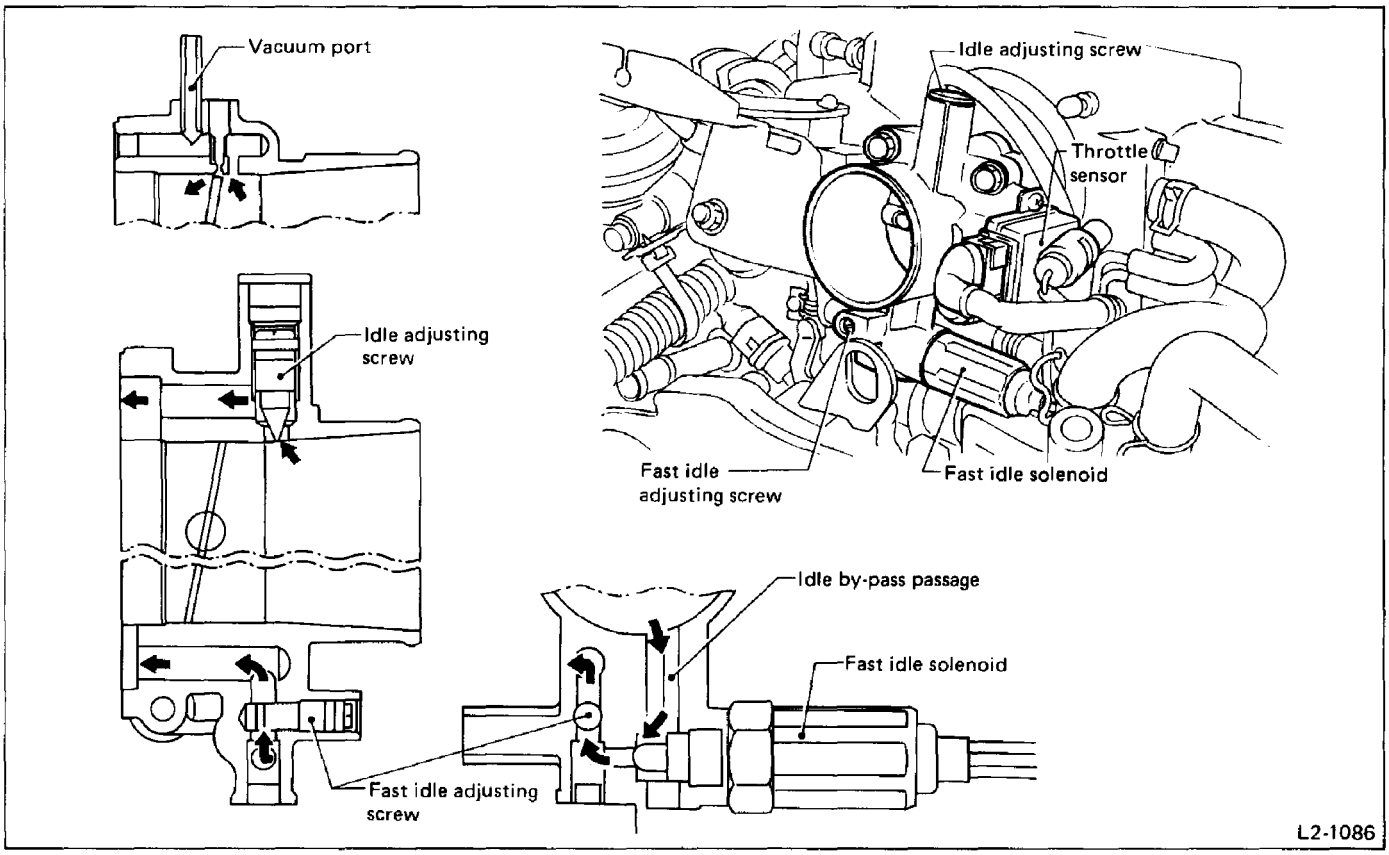

Fig. 2

2700 cc model

During idling, the throttle valve is almost fully closed and the air flow through the throttle body is less than that passing through the carburetor.
More than half of the air necessary for idling is supplied to the intake manifold via the by-pass air control valve.
And the by-pass air control valve properly controls the number of revolutions in idling, so it does not need to be adjusted.

THROTTLE SENSOR SYSTEM

A throttle position sensor is provided with a potentiometer and idle switch interlocked with the throttle valve shaft is utilized.

This throttle position sensor sends the MPFI control unit a potentiometer output signal corresponding to the opening of the throttle valve and an idle switch signal that turns ON only when the throttle is opened nearly to the idle position.

Using these signals, the MPFI control unit precisely controls the air-fuel ratio during acceleration and deceleration as well as idling.

1800 cc model

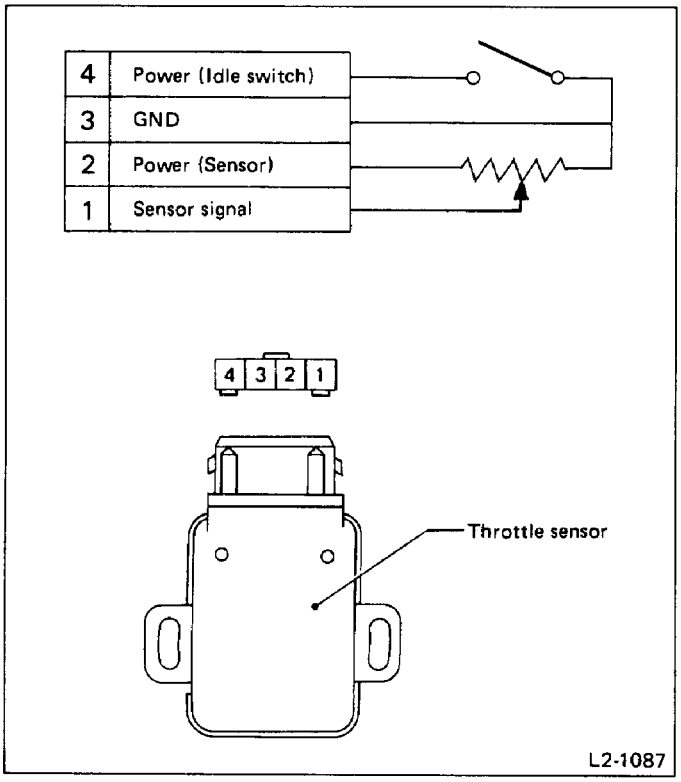

Fig. 3

2700 cc model

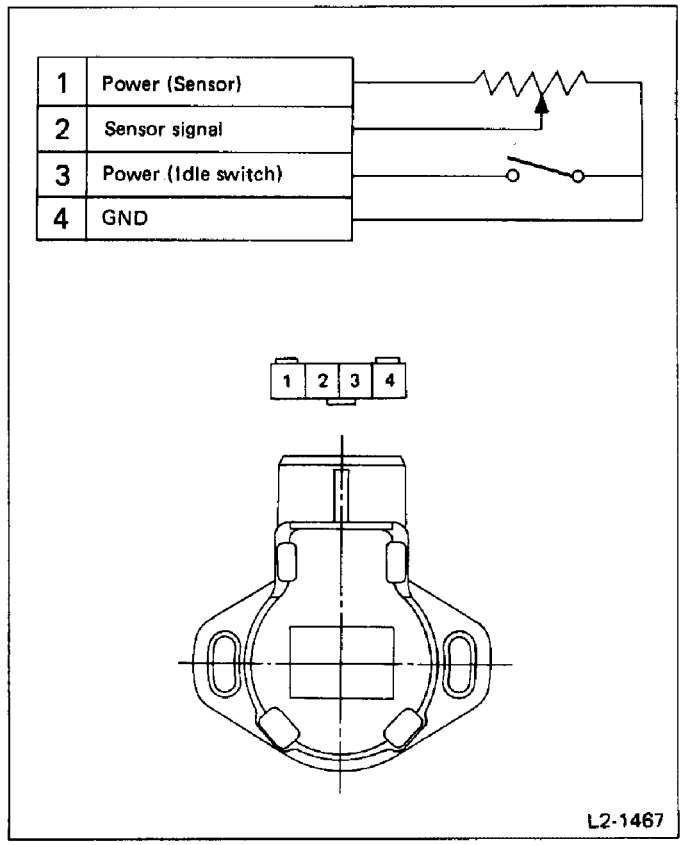

Fig. 4

By-pass Air Control Valve

(2700 cc model only)

The by-pass air control valve is regulated by a signal transmitted from the MPFI control unit. It finely controls the flowrate of air passing through the by-pass passage, allowing the engine to run at optimum speed under various conditions. This in turn results in stabilized exhaust gas emission, improved fuel economy and better performance.

1) The by-pass passage opens partially while the engine idles. When the engine is loaded (the air conditioner is turned ON, for example), the by-pass passage opens wider to let more air pass through. This maintains specified engine idling rpm.
2) When the engine is cold, the by-pass passage opens widely to allow more air to pass through. This speeds engine warm-up.
3) Variations in engine idling rpm over time and/or among products (= engines) are compensated for.
4) When the throttle valve closes (= dashpot function), a sudden drop in engine rpm is prevented to improve driving performance.

a. When battery voltage drops momentarily, the by-pass valve sometimes activates to increase idling speed to 900 rpm. This is not a problem.
b. Before the engine is warmed up [coolant temperature: above 80°C (176°F)], idling speed between the N or P range and the D range sometimes differs. However, this is not a problem because it assists in rapidly warming up the engine.

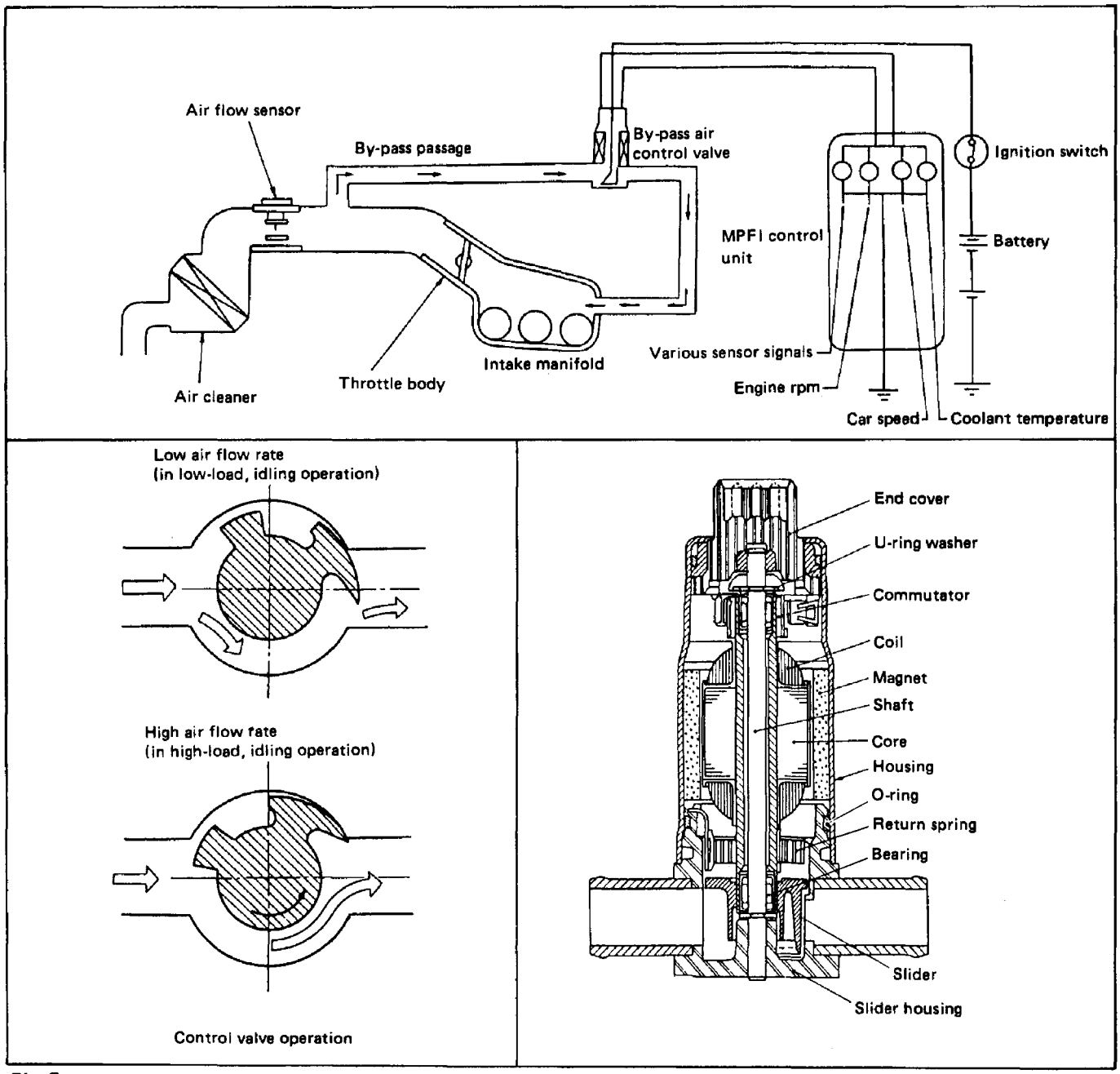

Fig. 5 Idling rpm control system

Auxiliary Air Valve

(1800 cc model only)

The auxiliary air valve is used to increase air flow when the engine is started up at a low temperature and the following warmup is performed. It consists of the coiled bimetal, the bimetal-operated shutter valve, and the electric heater element for bimetal. The passing air flow (at start-up) is increased as the temperature becomes lower. After start-up of the engine, the heating is performed by the heater to which current is supplied from the fuel pump relay circuit. Thereby, the shutter valve turns gradually to decrease the air flow. After a certain elapsed time, the shutter valve is closed.

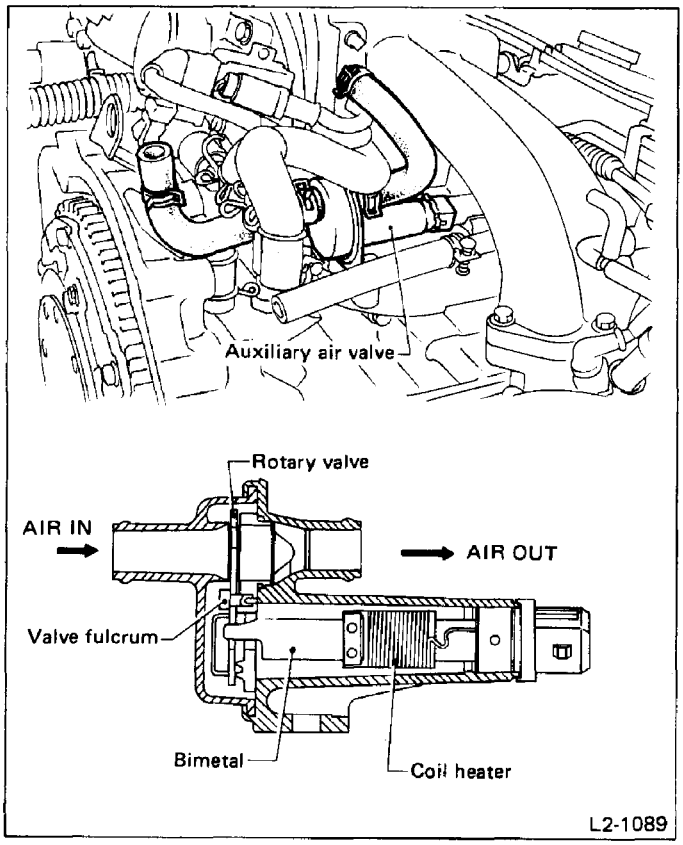

Fig. 6

Ignition System

The ignition system is composed of a battery, an ignition coil, a distributor, spark plugs, knock sensor, MPFI control unit and wires.

The crank angle sensor built-in distributor detects the reference crank angle and the positioned crank angle. Electronic signal of both angles is transmitted to MPFI control unit which is used in common by fuel injection system.

The MPFI control unit calculates the spark advance angle and determines the spark timing.

The electronic signal of spark timing determined by control unit is transmitted to the power transistor where it makes the primary circuit to ignition coil, whereby high voltage current is generated in the secondary circuit.

The high voltage of secondary circuit is distributed to the spark plug of each cylinder and discharged there.

UNDER NORMAL OPERATING CONDITIONS

The spark advance angle is calculated from the following three factors.

1) Engine speed compensation.
2) Advance when starting the engine.
3) Advance in all driving conditions except starting the engine, after engine speed exceeds the present value.

WHEN KNOCKING OCCURS (2700 cc model only)

A signal is transmitted from the knock sensor to the MPFI control unit. The MPFI control unit then retards spark timing to prevent engine knocking.

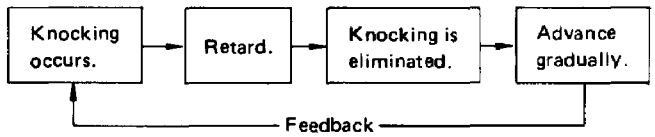

1800 cc model

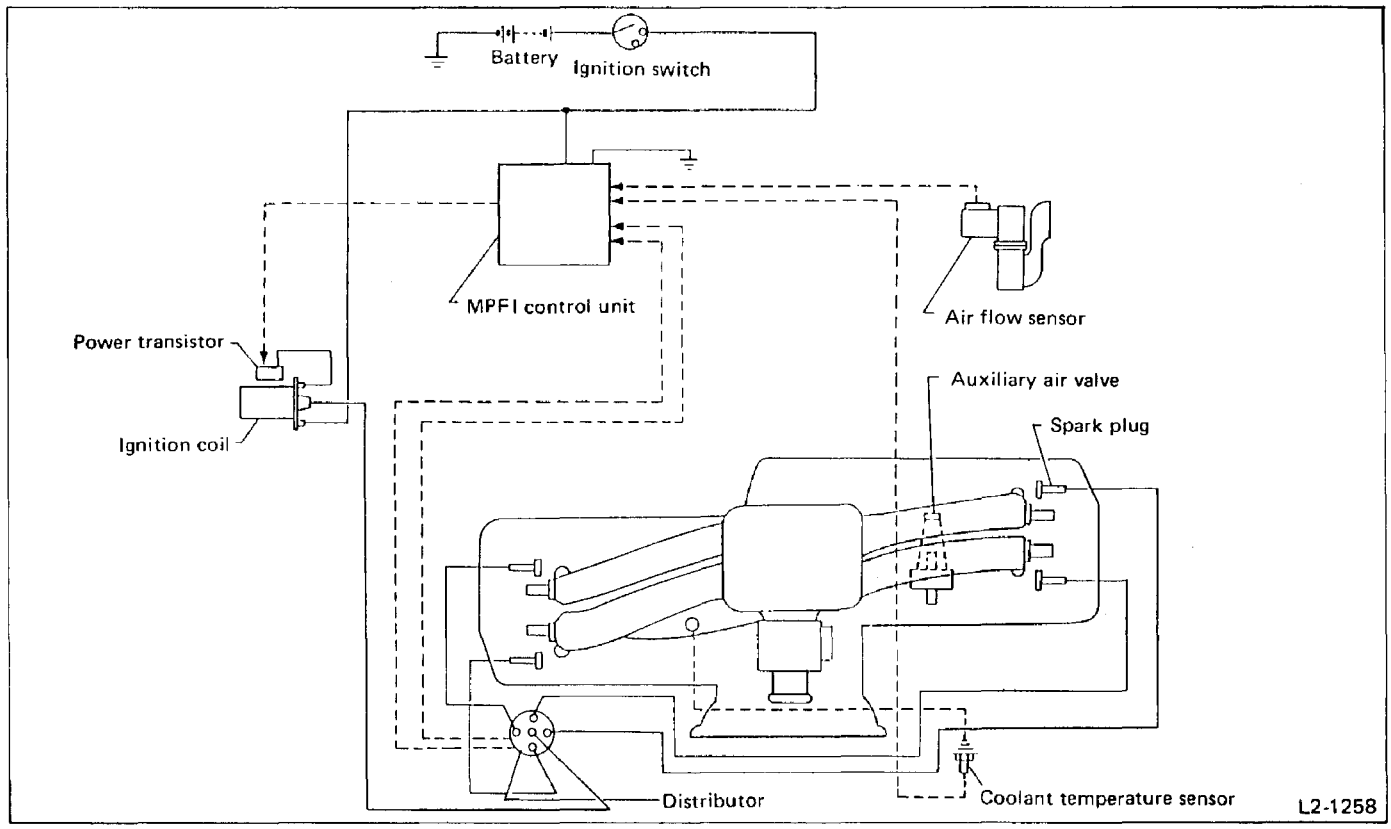

Fig. 7

2700 cc model

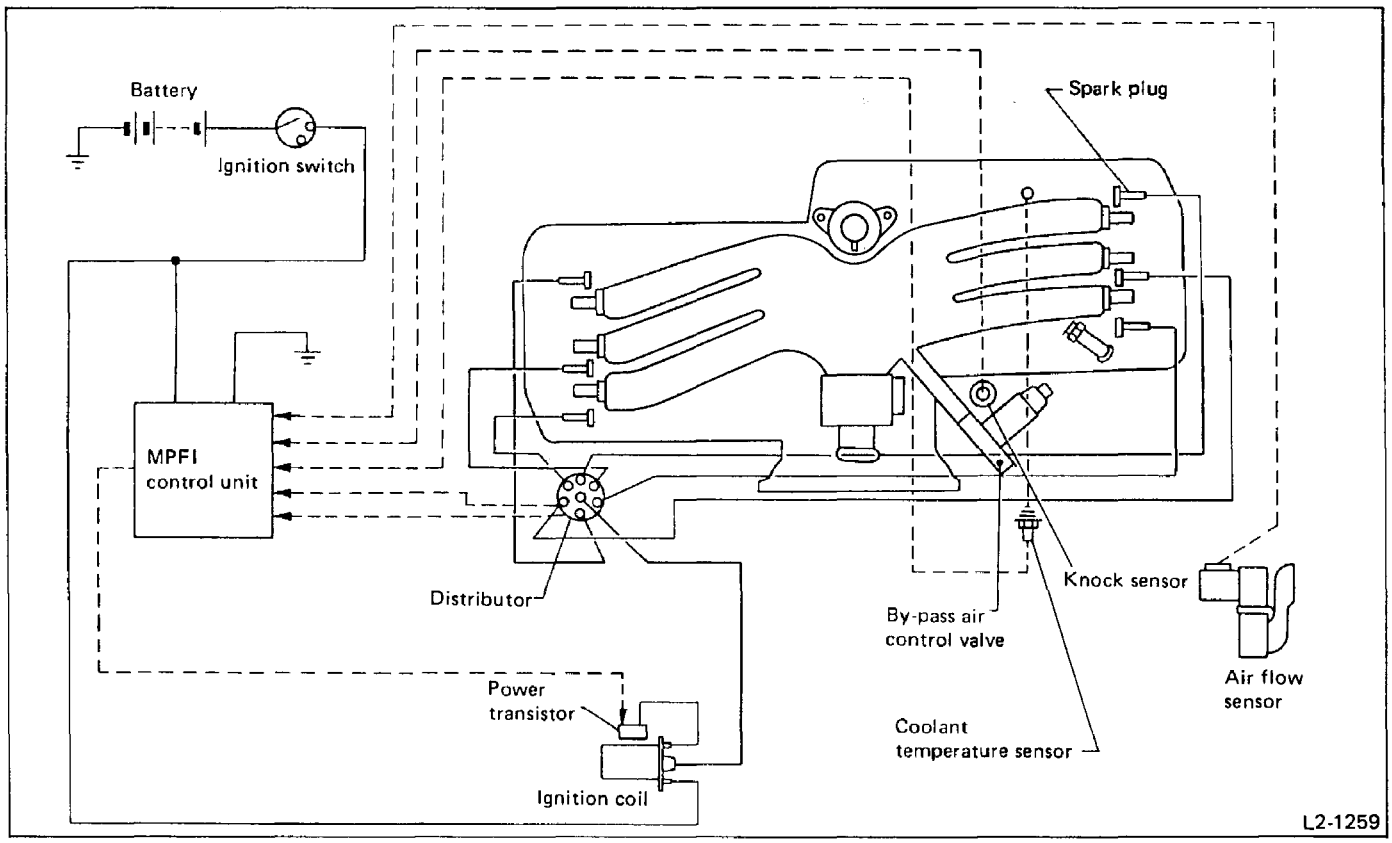

Fig. 8

KNOCK SENSOR (2700 cc model only)

The knock sensor is installed on the cylinder block, and senses knocking signals from each cylinder.
This knock sensor is a piezo-electric type which converts knocking vibrations into electric signals.
It consists of a piezo-electric element, weight, and case.
If knocking occurs in the engine, the weight in the case moves causing the piezo-electric element to generate a voltage.

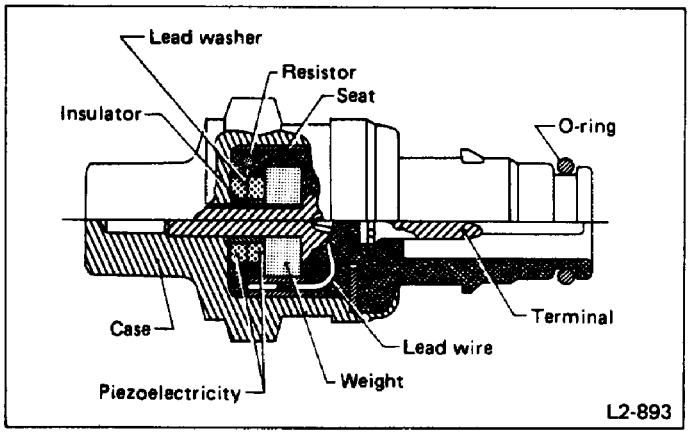

Fig. 9

Air-Fuel Ratio Learning Control System

This system has been developed to stabilize the quality of the hot-wire type air flow meter and fuel injector and to maintain their original performance by correcting their qualitative variation and aging.
By learning the feedback control amount of the O_2 sensor, the system controls the control unit to automatically set a coefficient of correction; thereby, the fuel injector always achieves fuel injection under the optimum condition.

O_2 Sensor

The O_2 sensor is mounted on the center exhaust pipe between the turbocharger and the rear exhaust pipe. It is used to sense oxygen concentration in the exhaust gas. If the fuel ratio is leaner than the stoichiometric ratio in the mixture (i.e. excessive amount of air), the exhaust gas contains more oxygen. To the contrary, if the fuel ratio is richer than the stoichiometric ratio, the exhaust gas hardly contains oxygen.
Therefore, examination of the oxygen concentration in exhaust gas makes it possible to show whether the air/fuel ratio is leaner or richer than the stoichiometric ratio.
The O_2 sensor has a zirconia tube (ceramic) which generates voltage if there is a difference in oxygen concentration between the inside and outside of the tube. Platinum is coated on the inside and outside of the zirconia tube for the purpose of catalysis and electrode provision. The hexagon screw on the outside is grounded to the exhaust pipe, and the inside is connected to the MPFI control unit through the harness.

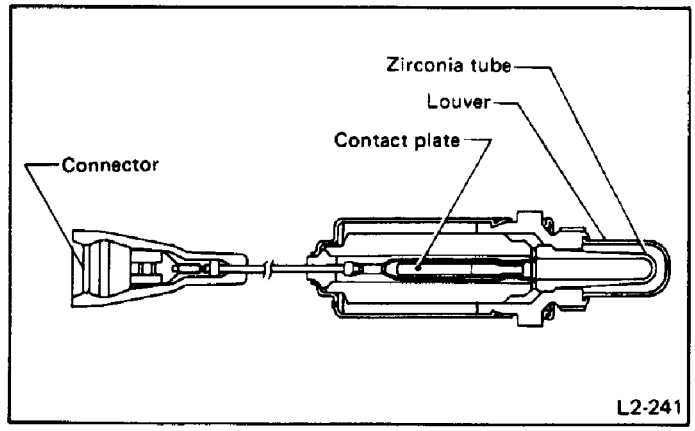

Fig. 10

When rich air-fuel mixture is burnt in the cylinder, the oxygen in the exhaust gases reacts almost completely through the catalytic action of the platinum coating on the surface of the zirconia tube. This results in very large difference in the oxygen concentration between the inside and outside, and the electromotive force generated is large.
When a lean air-fuel mixture is burnt in the cylinder, oxygen remains in the exhaust gases even after the catalytic action, and this results in small difference in the oxygen concentration. The electromotive force is very small.

The difference in oxygen concentration changes greatly in the vicinity of the optimum air-fuel ratio, and hence the change in the electromotive force is also large. By inputting this information into the MPFI control unit, the air-fuel ratio of the supplied mixture can be determined easily. The O_2 sensor does not generate much electromotive force when the temperature is low. The characteristics of the electromotive force stabilize at temperatures of approximately 300 to 400°C (572 to 752°F).

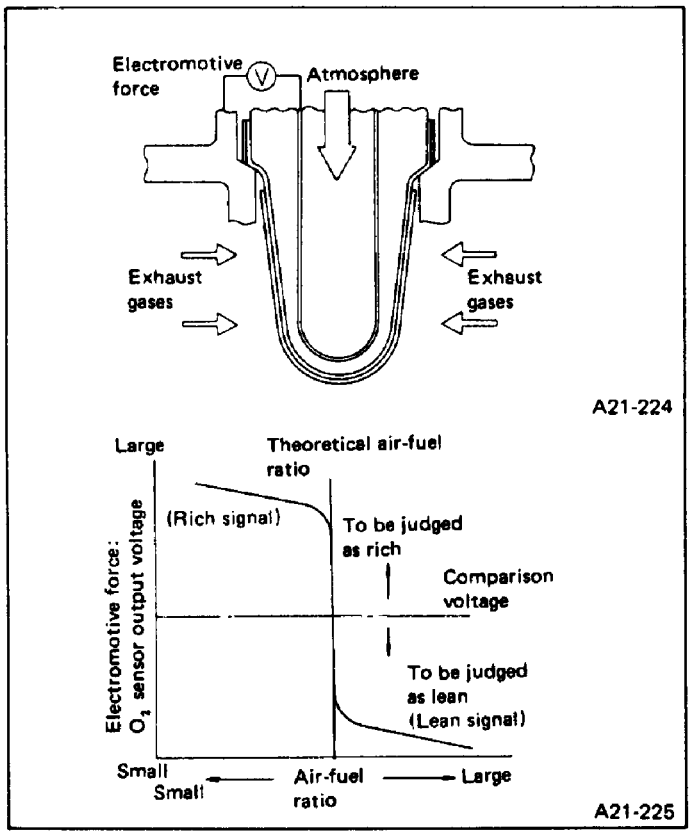

Fig. 11

1800 cc model

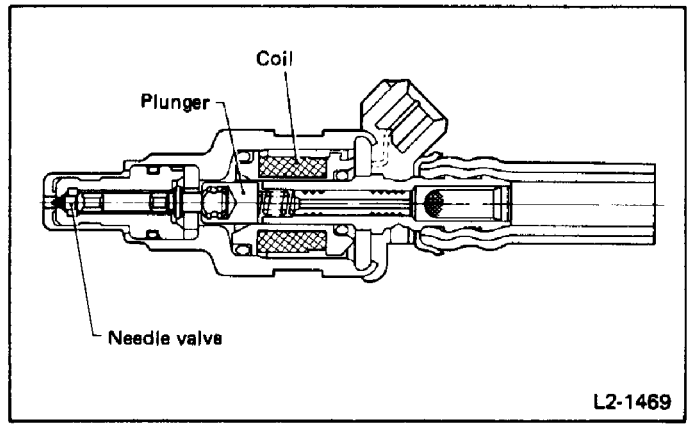

Fig. 12

2700 cc model

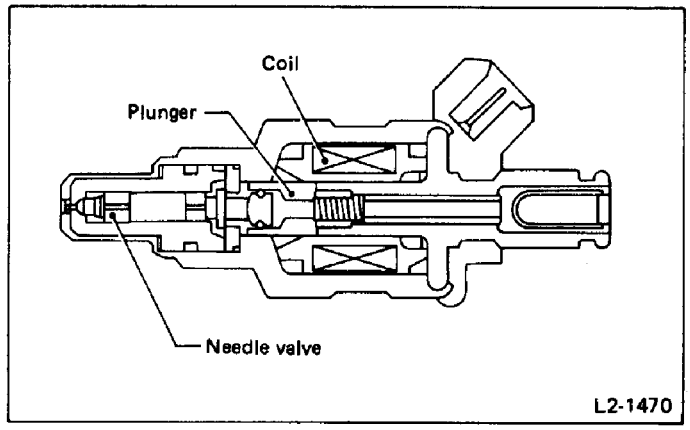

Fig. 13

Fuel Injector

The fuel injector injects fuel according to the valve open signal received from the MPFI control unit.

The nozzle is attached on the top of the fuel injector. The needle valve is lifted by the solenoid coil through the plunger on arrival of the valve open signal.

Since the injection opening, the lifted level of needle valve and the regulator-controlled fuel pressure are kept constant, the amount of fuel to be injected can be controlled only by the valve open signal from the MPFI control unit.

At the fuel inlet of the injector, the filter is mounted to prevent dust from entering.

On the 2700 cc model, a high resistor is built into the fuel injector to eliminate a separate dropping resistor.

Dropping Resistor

(1800 cc model only)

The dropping resistor serves as a voltage control to maintain optimum injector driving current.

Coolant Thermosensor

The coolant thermosensor is equipped on the waterpipe which is made of aluminum alloy. Its thermistor changes resistance with respect to temperature.
To the MPFI control unit, the thermosensor sends the coolant temperature signal which is decisive for the fuel volume to be injected.

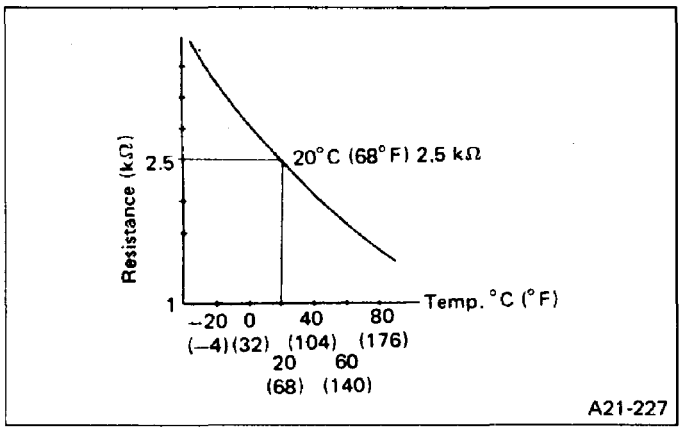

Fig. 14

Pressure Regulator

The pressure regulator is divided into the fuel chamber and the spring chamber by the diaphragm as illustrated below. Fuel is fed to the fuel chamber through the fuel inlet connected with the injector. A difference in pressure between the fuel chamber and the spring chamber connected with the intake manifold causes the diaphragm to be pushed down, and fuel is fed back to the fuel tank through the return line.
By returning fuel so as to balance the above pressure difference and the spring force, the fuel pressure is kept at a constant level 250.1 kPa (2.55 kg/cm^2, 36.3 psi) against the intake manifold pressure.

(1800 cc model)

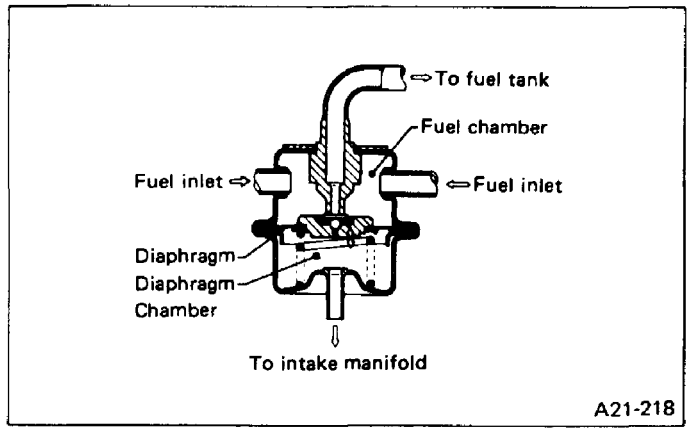

Fig. 15

(2700 cc model)

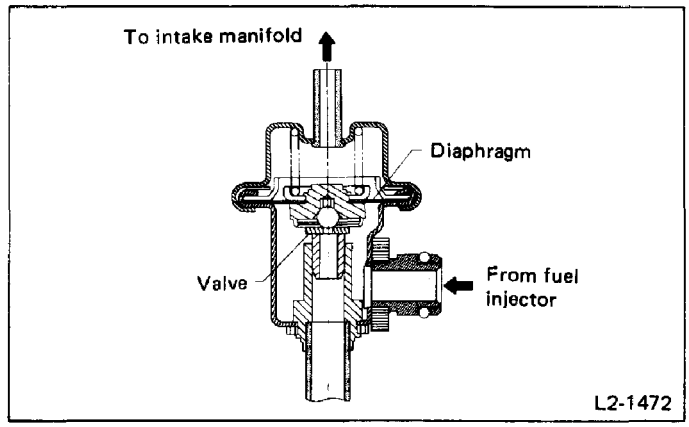

Fig. 16

SCHEMATIC DRAWING

1800cc model

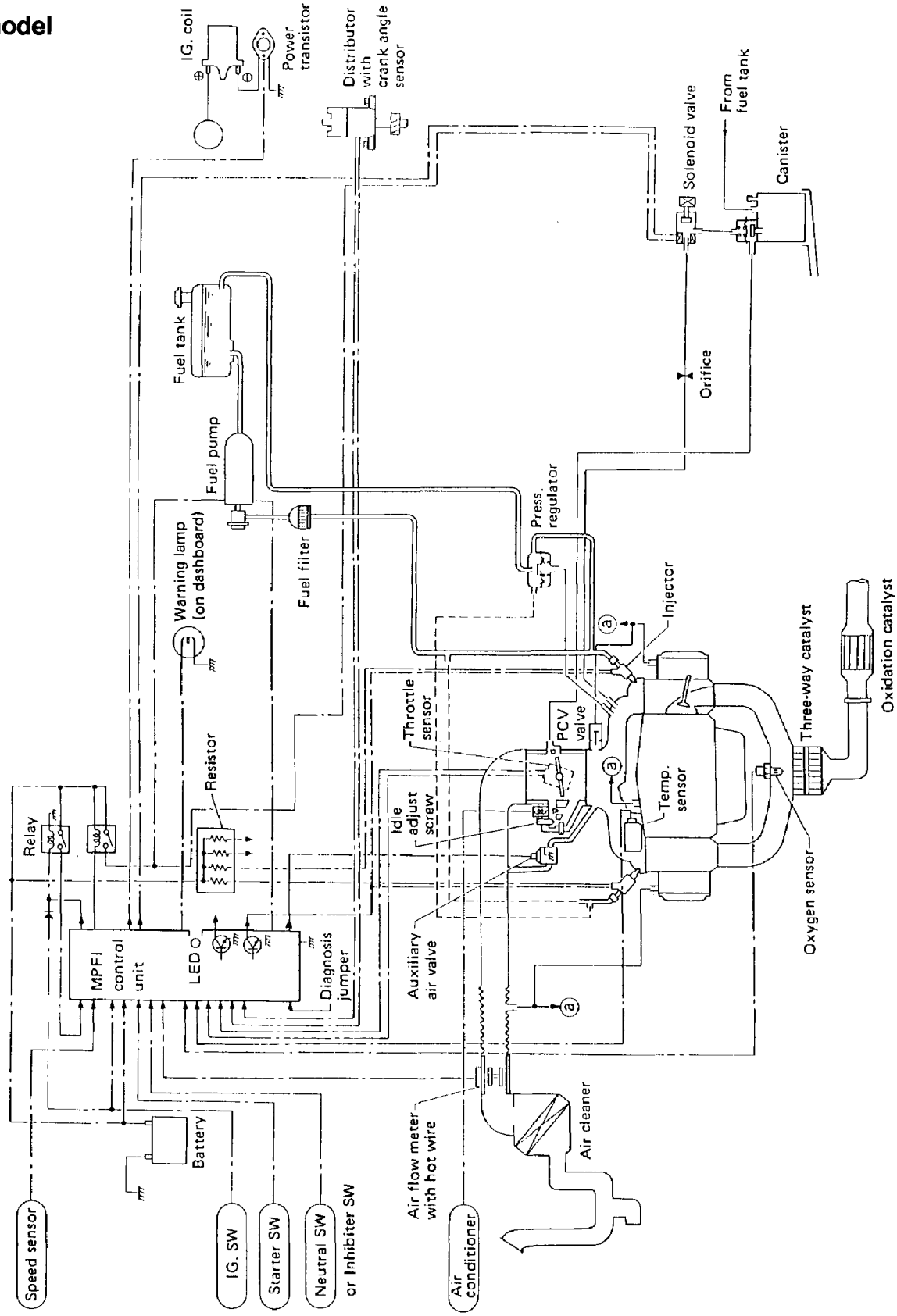

Fig. 17

L2-1255

2700cc model

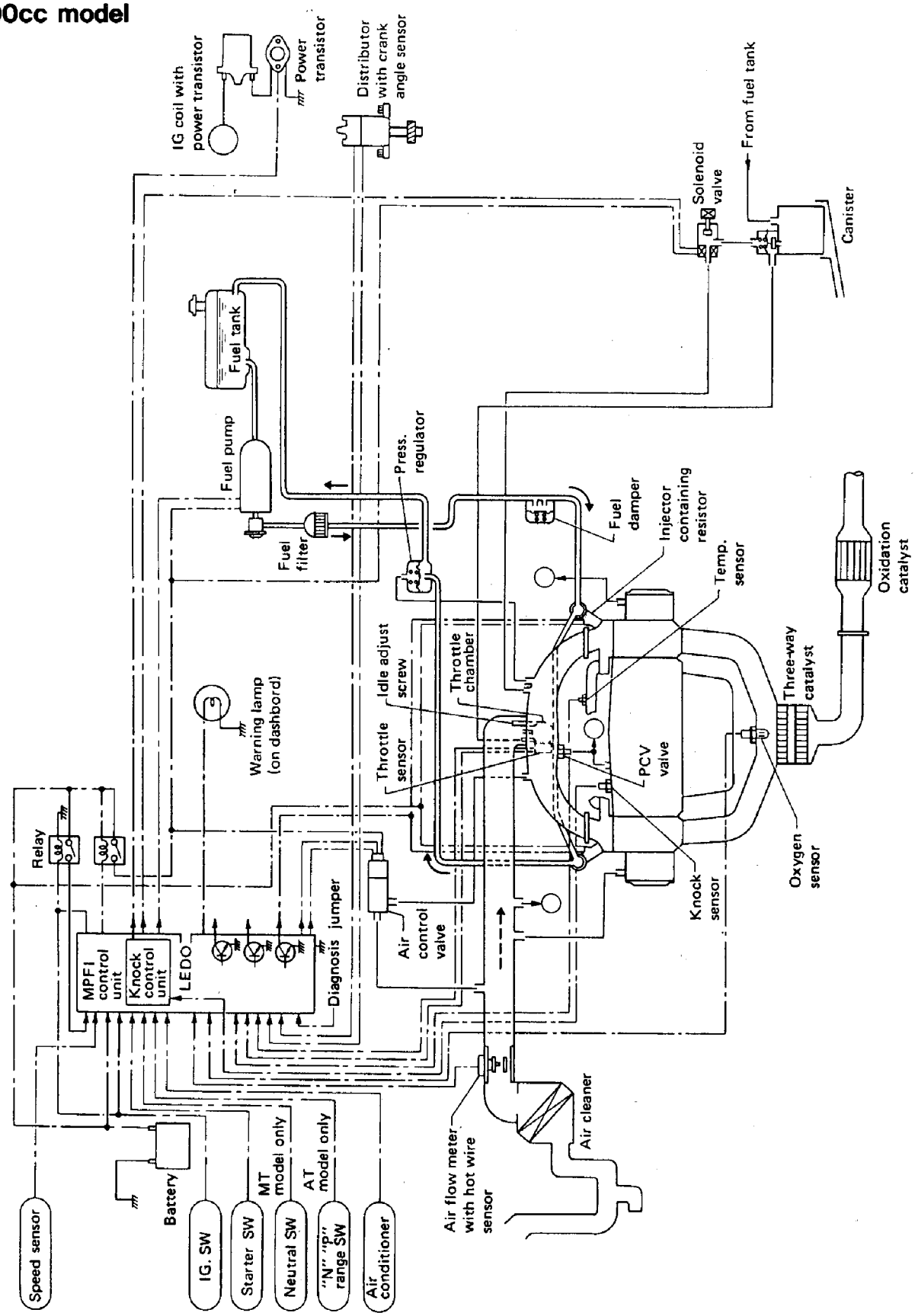

Fig. 18

L2-1256

COMPONENT PARTS

Throttle Body and EGR Valve

1800cc model

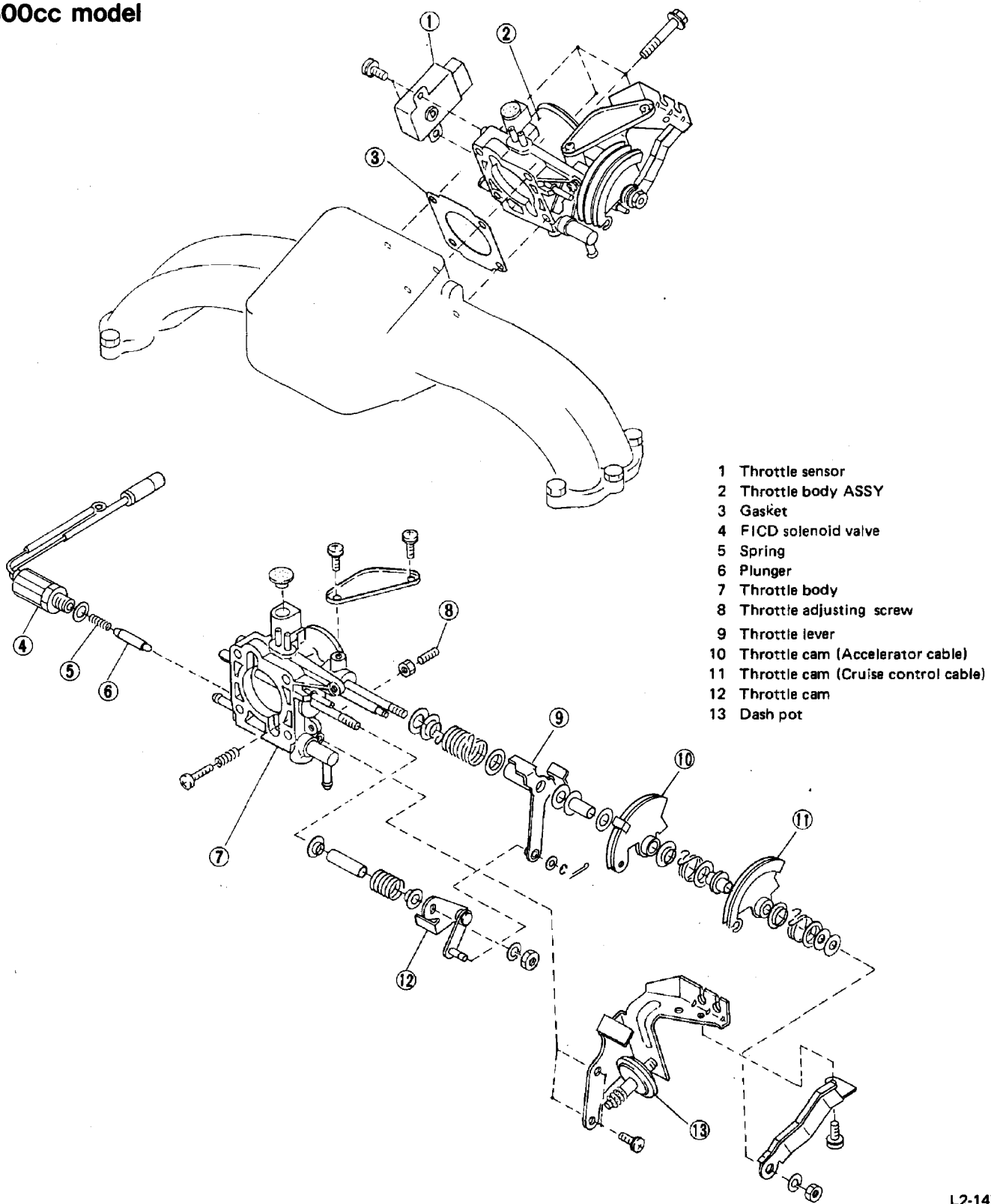

1 Throttle sensor
2 Throttle body ASSY
3 Gasket
4 FICD solenoid valve
5 Spring
6 Plunger
7 Throttle body
8 Throttle adjusting screw
9 Throttle lever
10 Throttle cam (Accelerator cable)
11 Throttle cam (Cruise control cable)
12 Throttle cam
13 Dash pot

Fig. 19

L2-1473

2700cc model

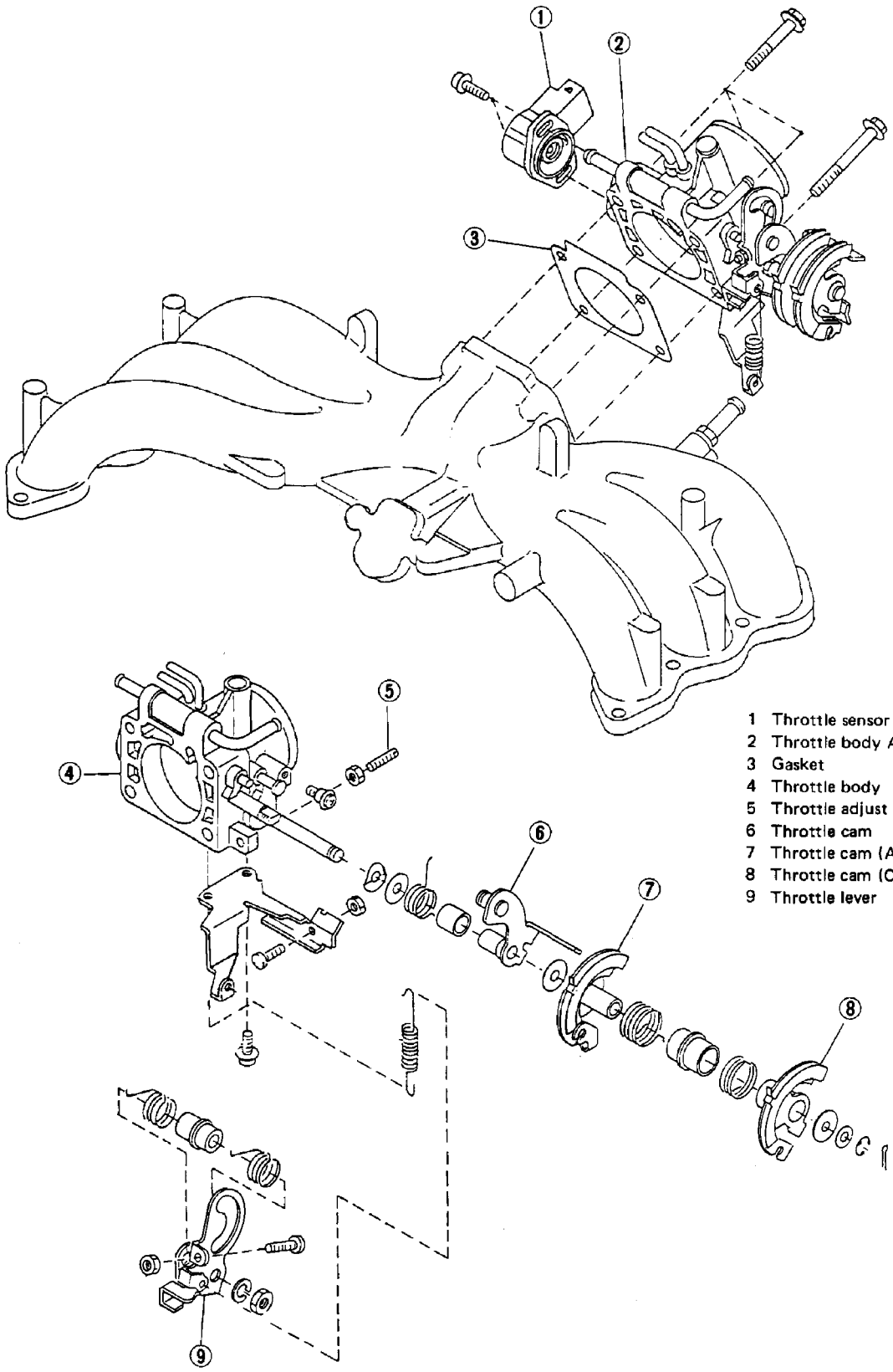

Fig. 20 L2-1474

Intake Manifold

1800cc model

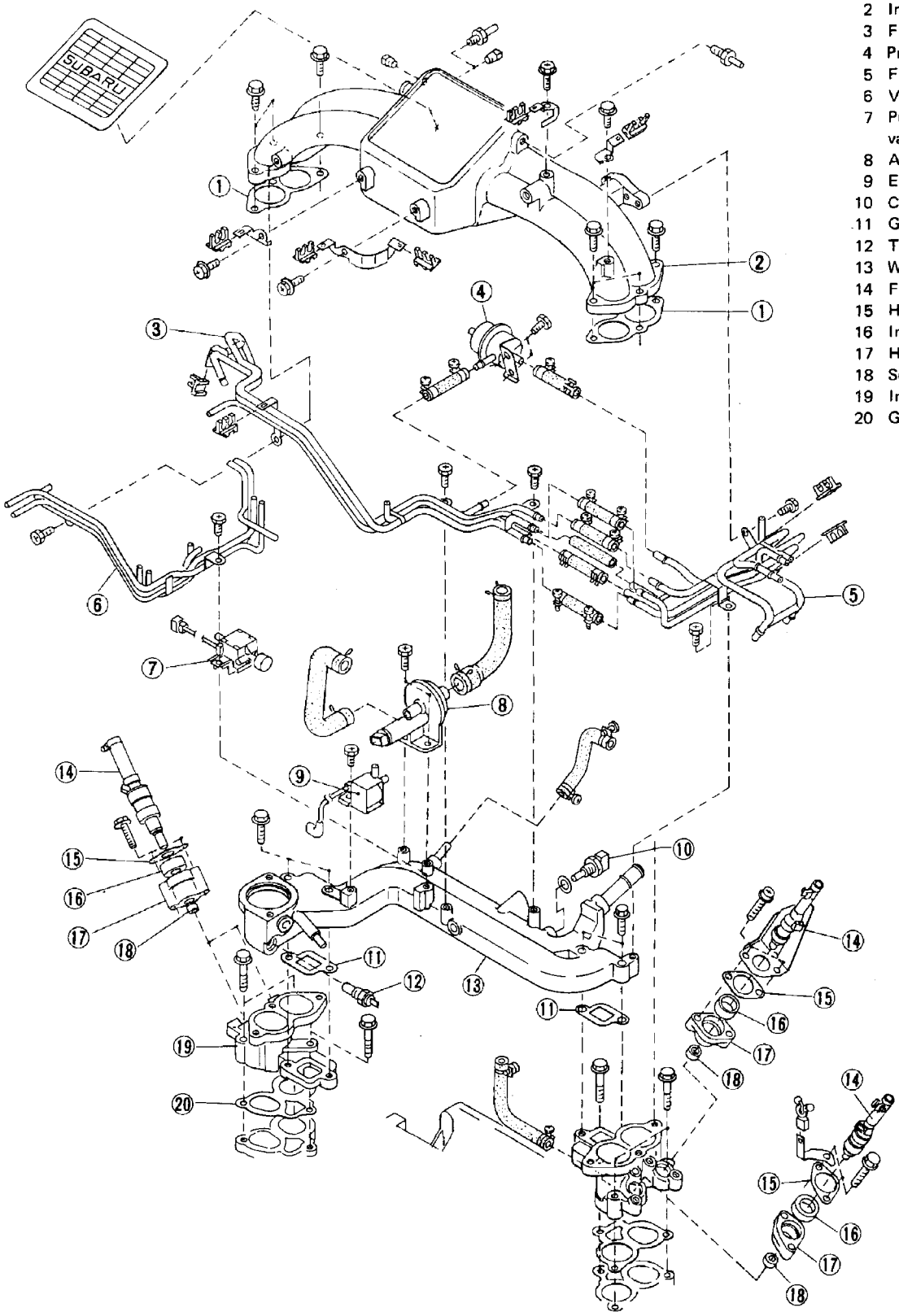

1 Gasket
2 Intake manifold collector
3 Fuel pipe ASSY RH
4 Pressure regulator
5 Fuel pipe ASSY LH
6 Vacuum pipe ASSY
7 Purge control solenoid valve
8 Auxiliary air valve
9 EGR solenoid valve
10 Coolant thermosensor
11 Gasket
12 Thermometer
13 Water pipe
14 Fuel injector
15 Holder plate
16 Insulator
17 Holder
18 Seal
19 Intake manifold
20 Gasket

Fig. 21

L2-1475

2700cc model

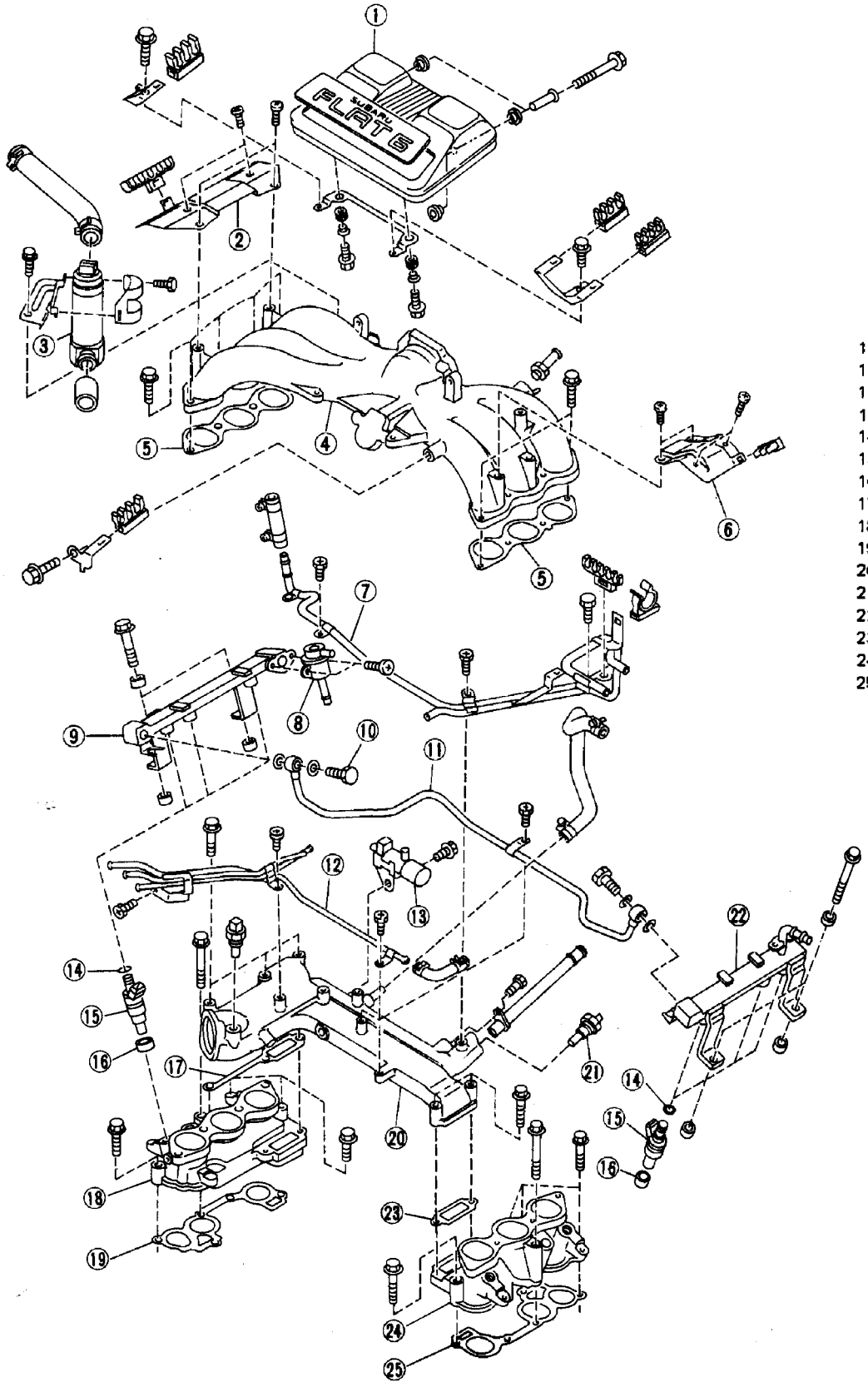

1 Intake manifold cover
2 Fuel pipe cover RH
3 By-pass air control valve
4 Intake manifold collector
5 Gasket
6 Fuel pipe cover LH
7 Fuel pipe ASSY
8 Pressure regulator
9 Fuel pipe RH
10 Union bolt
11 Fuel pipe
12 Fuel pipe ASSY
13 Purge control solenoid valve
14 O-ring
15 Fuel injector
16 Insulator
17 Gasket
18 Intake manifold RH
19 Gasket
20 Water pipe
21 Coolant thermosensor
22 Fuel pipe LH
23 Gasket
24 Intake manifold LH
25 Gasket

Fig. 22 L2-1476

Air Intake System

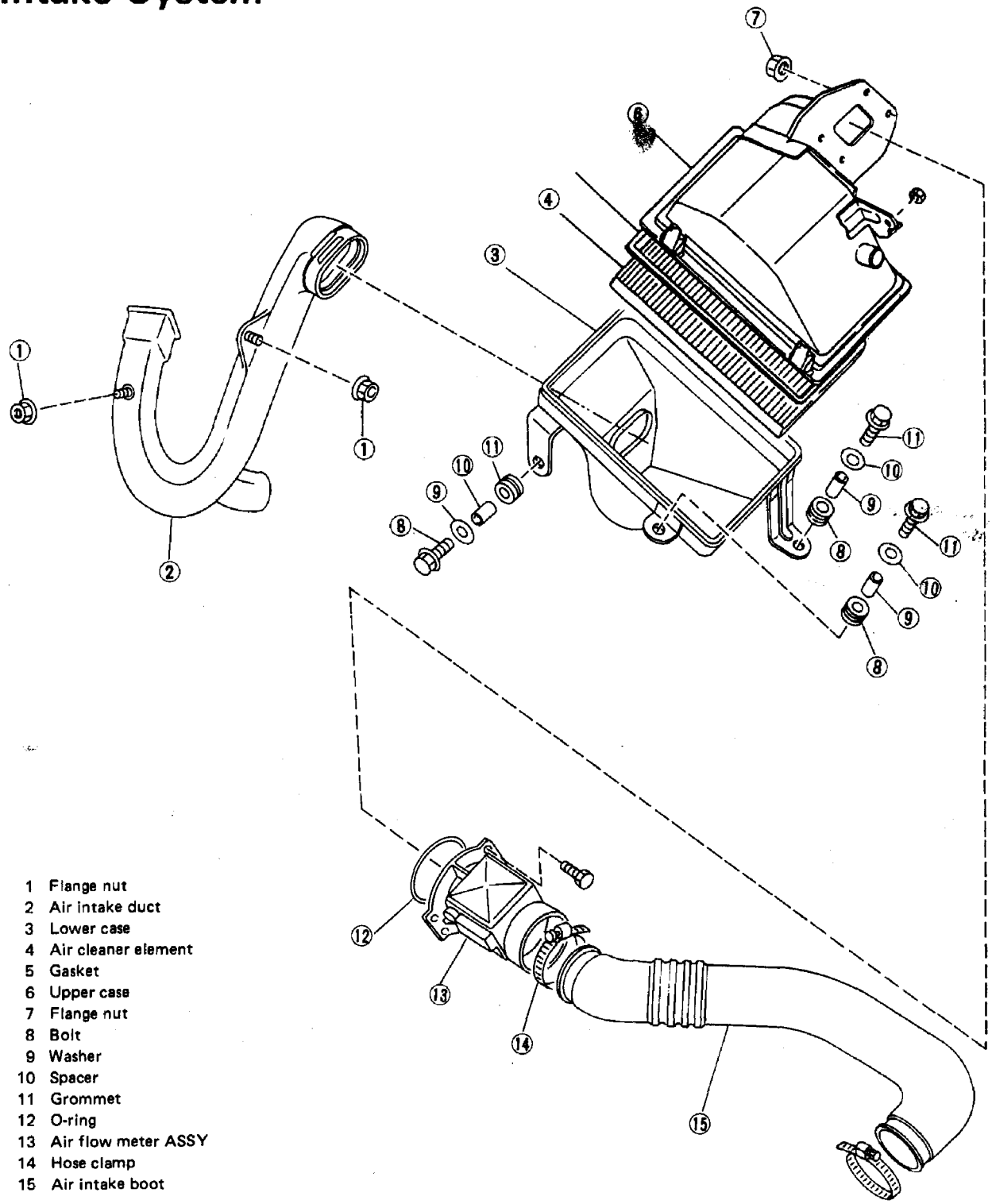

1 Flange nut
2 Air intake duct
3 Lower case
4 Air cleaner element
5 Gasket
6 Upper case
7 Flange nut
8 Bolt
9 Washer
10 Spacer
11 Grommet
12 O-ring
13 Air flow meter ASSY
14 Hose clamp
15 Air intake boot

Fig. 23

L2-1477

SERVICE PROCEDURE

Precautions in Servicing

1) Never connect the battery in reverse polarity.
- The MPFI control unit will be destroyed instantly.
- The fuel injector and other part will be damaged in just a few minutes more.

2) Do not disconnect the battery terminals while the engine is running.
- A large counter electromotive force will be generated in the alternator, and this voltage may damage the electronic parts such as MPFI control unit, etc.

3) Before disconnecting the connectors of each sensor and the MPFI control unit, be sure to turn off the ignition switch.
- Otherwise, the MPFI control unit may be damaged.

4) The connectors to each sensor in the engine compartment and the harness connectors on the engine side and body side are all designed to be waterproof. However, it is still necessary to take care not to allow water to get into the connectors when washing the vehicle, or when servicing the vehicle on a rainy day.

5) Every MPFI-related part is a precision part. Do not drop them.

6) Observe the following cautions when installing a radio in MPFI equipped models.

a. The antenna must be kept as far apart as possible from the control unit.

b. The antenna feeder must be placed as far apart as possible from the MPFI control unit and MPFI harness.

c. Carefully adjust the antenna for correct matching.

d. When mounting a large power type radio, pay special attention to items a. thru c. above.

- Incorrect installation of the radio may affect the operation of the MPFI control unit.

7) Before disconnecting the fuel hose, disconnect the fuel pump connector and crank the engine for more than five seconds to release pressure in the fuel system. If engine starts during this operation, run it until it stops.

Air Flow Meter

INSPECTION

1) Check for leaks or damage in the connection between the air intake boot and air flow meter. Repair any defect noted.

2) Remove the connectors from the air flow meter, the air intake boot, and the air flow meter for the air cleaner case in the order stated.

3) Check the exterior of the air flow meter for damage.

4) Check for foreign matter, water, or oil in the air passages, especially in the by-pass. If any abnormality is noticed, replace the air flow sensor.

5) If no defect is found in the visual checks above, conduct the following inspections.

(1) Turn the ignition switch OFF (engine off).

(2) Attach the air flow meter to the air cleaner.

(3) Disconnect the air flow meter connector, and remove the rubber cover from the connector.

Conduct the following checks by attaching the tester check pins to the connector terminals on the side from which the rubber cover has been removed.

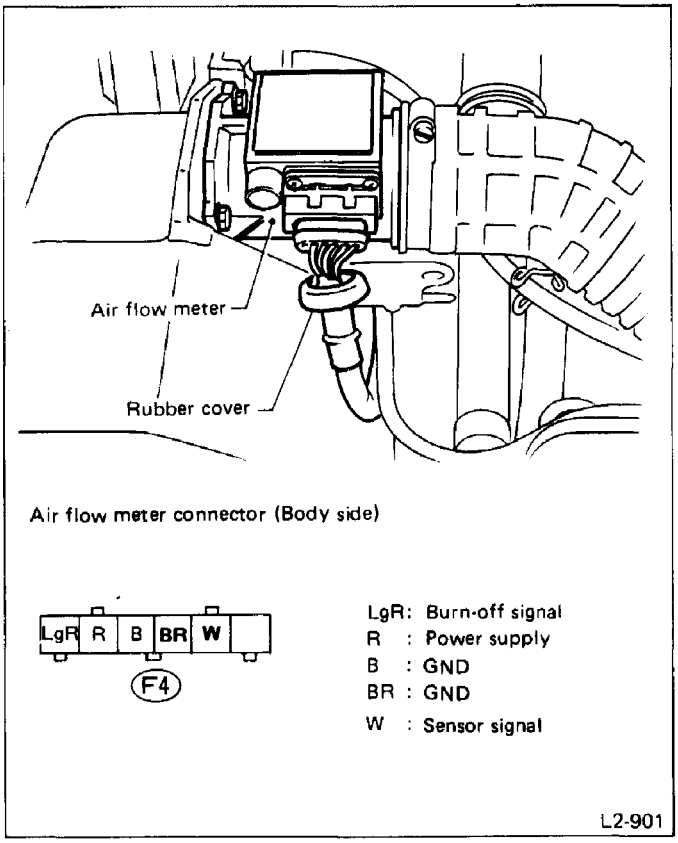

Fig. 24

(4) Measure resistance between the body and ground terminals (B) and (BR).

Specified resistance:
10Ω, max.

If resistance is greater than 10Ω, check the harness and internal circuits of the control unit for discontinuity, and the ground terminal on the intake manifold for poor contact.

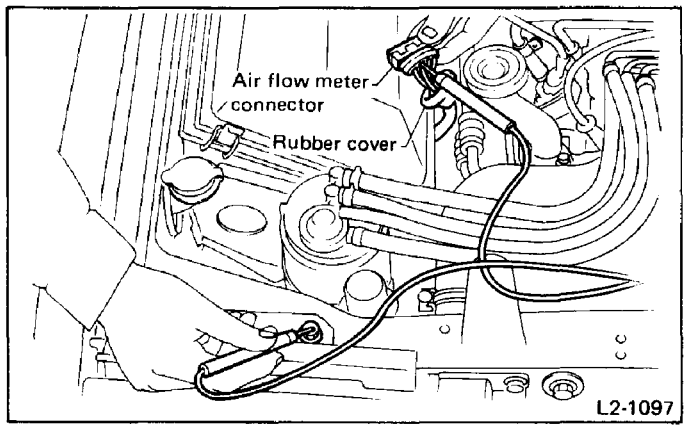

Fig. 25

(5) Turn the ignition switch ON (engine off).
(6) Connect the air flow meter connector.
(7) Measure voltage across power terminal (R) and the body.

Specified voltage:
10V, min.

If voltage is outside specifications, check the condition of the parts (battery, fuse, control unit harness, connector, etc.) in the power line.

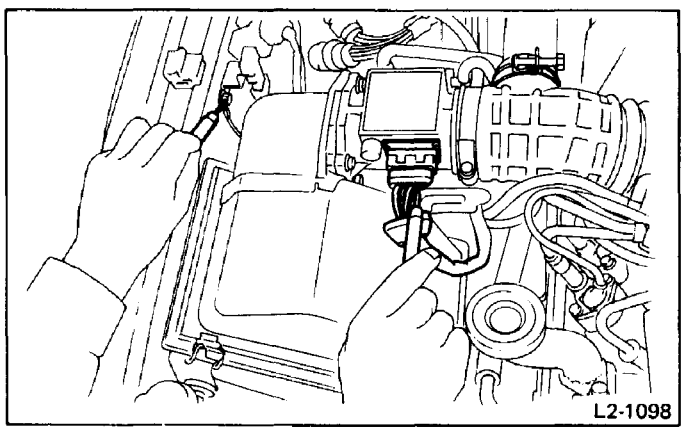

Fig. 26

(8) Attach the positive lead of a tester to signal terminal (W) and the negative lead to the ground terminal (BR). Measure the voltage across the two terminals.

Specified voltage:
1 – 2V

If voltage is outside specifications, replace the air flow meter.

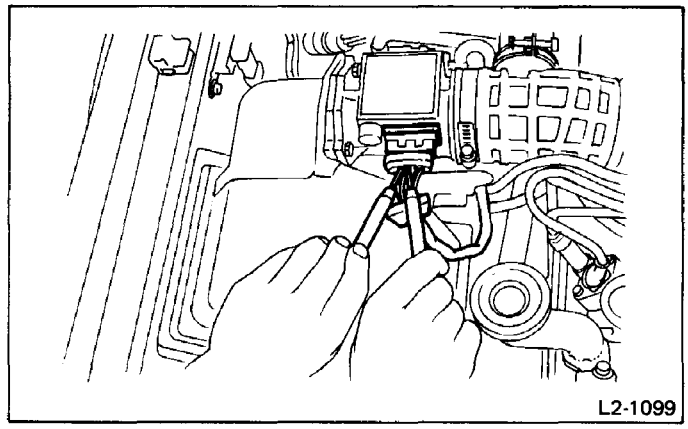

Fig. 27

(9) Remove the air flow meter from the air cleaner. (The air intake boot need not be removed.)
(10) Blow air from the air cleaner side to check if voltage across terminals (W) and (BR) is greater than that measured in step (8) above. If not, replace the air flow meter.

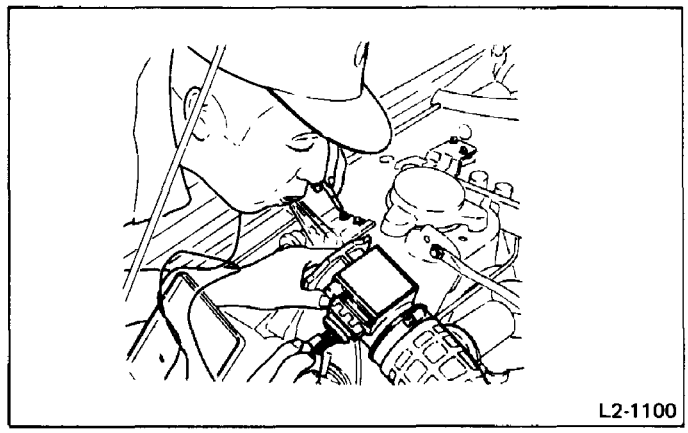

Fig. 28

(11) Install the air flow meter on the air cleaner.
(12) Start the engine.
(13) Warm up the engine until the coolant temperature reaches approximately 80°C (176°F).
(14) Drive at speed greater than 24 km/h (15 MPH) for at least one minute.

(15) Race engine above 2,000 rpm.
(16) While idling the engine, monitor voltage across terminal (LgR) of the air flow meter connector and the body. (0 V under normal operating conditions is OK.)

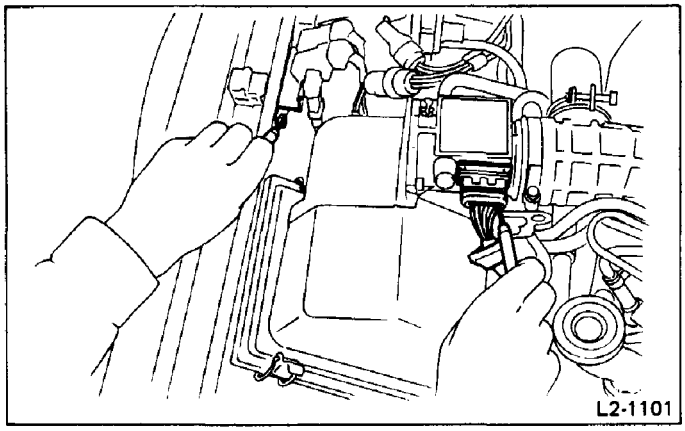

Fig. 29

(17) Turn the ignition switch OFF. Check if 12 volts are present across the terminal LgR and the body for one second shortly after the ignition switch has been turned OFF. If not, check the harness from the control unit to the air flow meter for discontinuity.

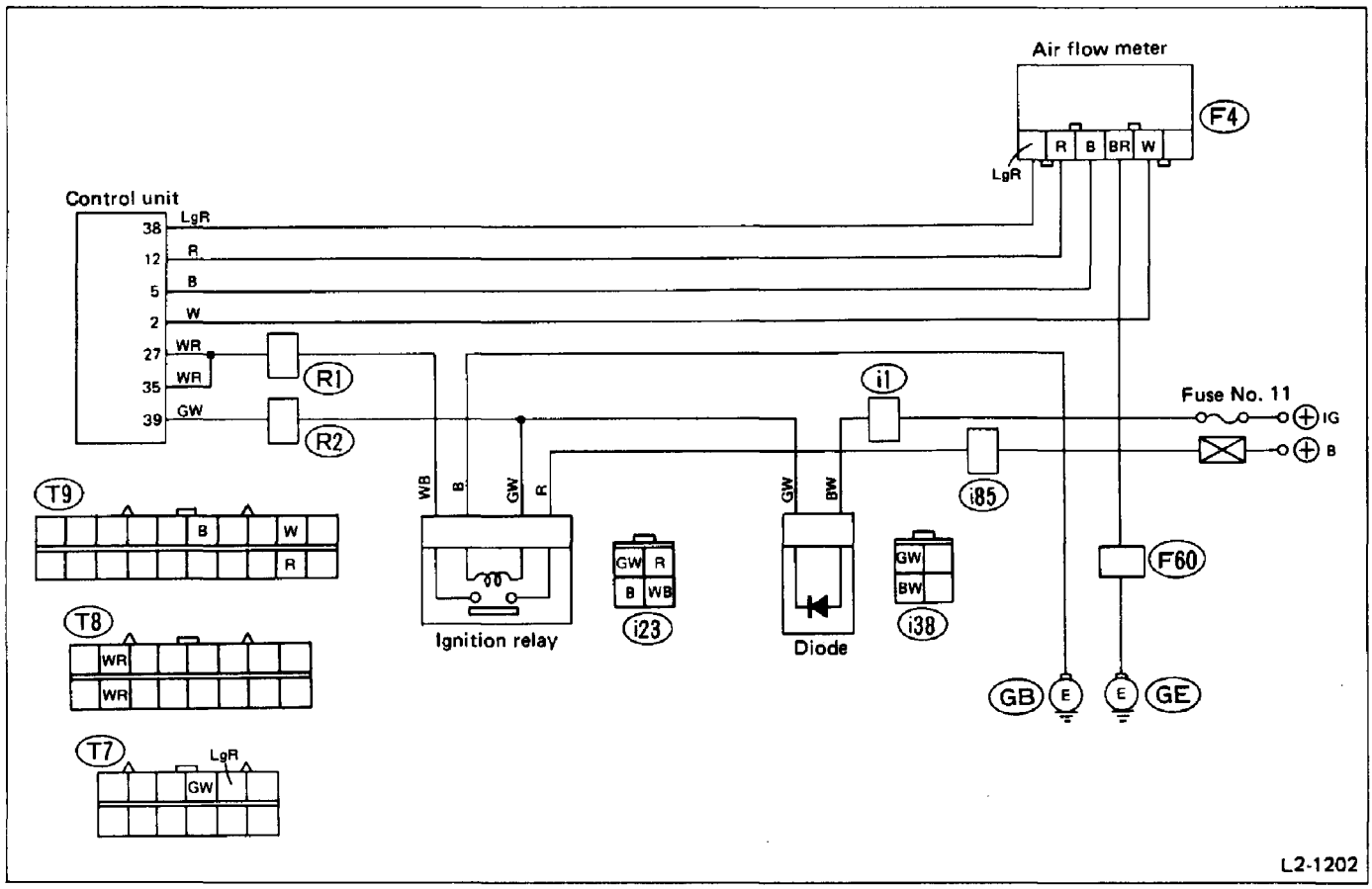

Fig. 30

Throttle Body

1800cc model

INSPECTION AND ADJUSTMENT

THROTTLE SENSOR

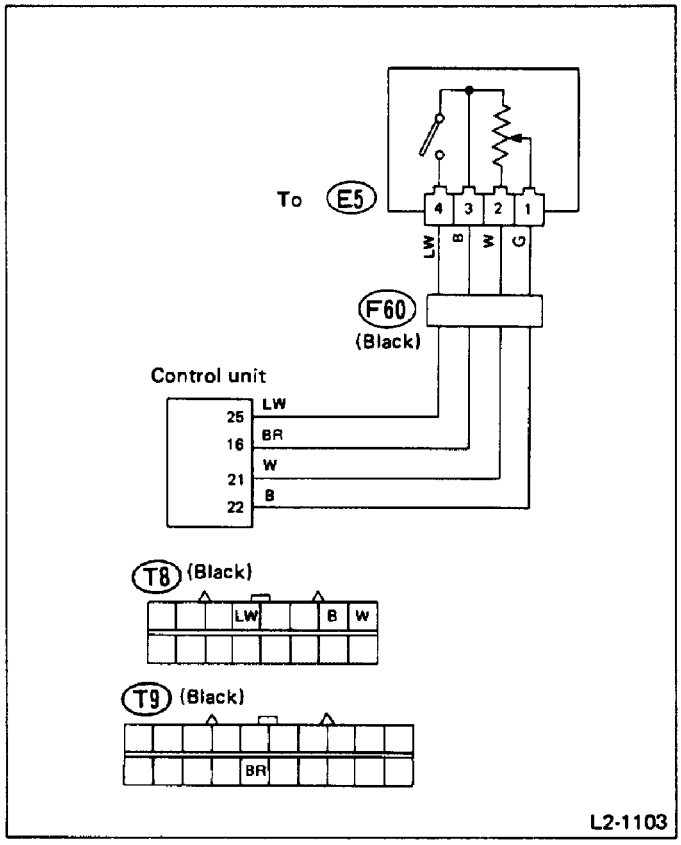

Fig. 31

Idle contact

Before checking the idle contact, remove the intake duct.

Insert a thickness gauge between the stopper screw of the throttle body and the stopper (portion Ⓖ), and check for continuity between (④ and ③).

1) Make sure that ④ and ③ are conducting when the throttle is closed fully.

2) Make sure that ④ and ③ are conducting when the thickness of gauge is 0.55 mm (0.0217 in) (this corresponds to throttle opening of 1.5°).

3) Make sure that ④ and ③ are not conducting when the thickness is 0.92 mm (0.0362 in) (this corresponds to a throttle opening of 2.5°).

4) If the above standards are not satisfied, loosen the screws (two) securing the throttle switch to the throttle body, and turn the throttle switch main body until the correct adjustment is obtained.

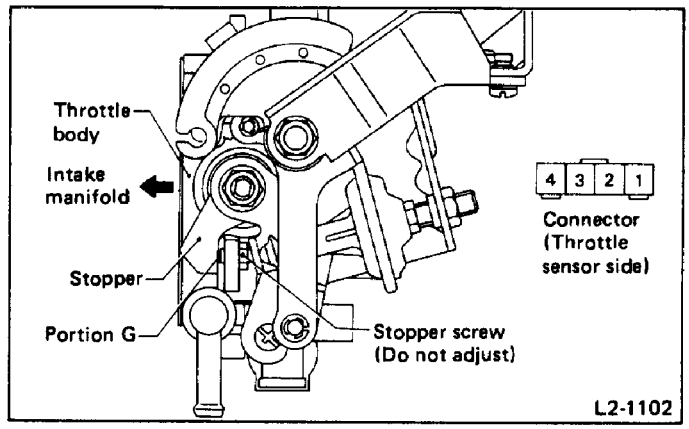

Fig. 32

Throttle opening signal

1) Measure resistance between terminals ③ and ②.

Specified resistance:
6 – 18 kΩ

If resistance is outside specifications, replace the sensor.

2) Measure resistance between terminals ③ and ①.

Specified resistance:
5.8 – 17.8 kΩ (Throttle valve fully closed)
1.5 – 5.1 kΩ (Throttle valve fully opened)

Ensure that resistance changes smoothly between the fully-closed and fully-opened throttle positions. If resistance is outside specifications, replace the sensor.

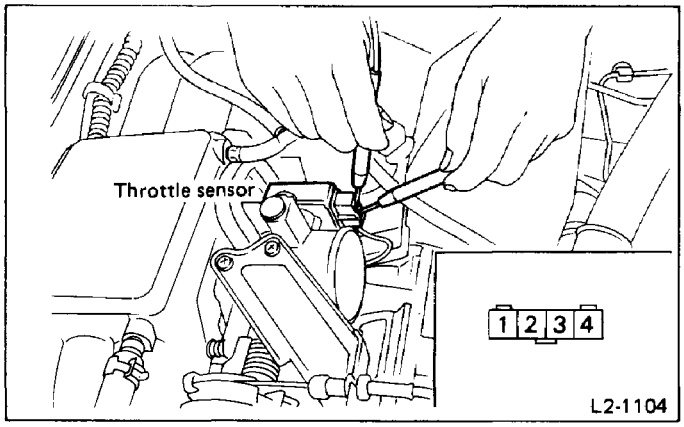

Fig. 33

DASH POT

1) Warm-up the engine sufficiently, and check that the idle speed is as specified.
2) Under the non-loaded state, turn the throttle lever by hand and increase engine speed until the end of the dash pot is off the throttle cam.
3) Gradually return the throttle lever, and read the engine rpm when the throttle cam contacts the end of the dash pot.

Engine rpm	2,800 – 3,400 rpm

4) If the engine rpm is not within this range, loosen the lock nut of the dash pot, and turn the dash pot until this specification is satisfied. After adjustment, tighten the lock nut securely.
5) After adjustment, race the engine and make sure the idle speed returns correctly to the idle speed as the throttle is released.

2700cc model

INSPECTION AND ADJUSTMENT

THROTTLE SENSOR

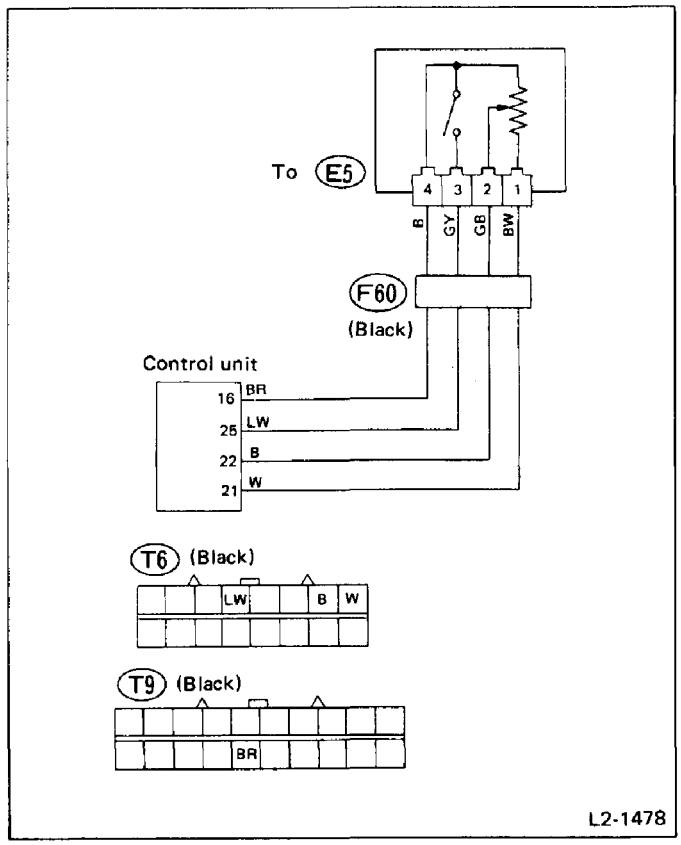

Fig. 34

1) Disconnect the throttle sensor connector.
2) Insert a thickness gauge [0.35 mm (0.0138 in), 0.75 mm (0.0295 in)] between the stopper screw and throttle lever [portion G], and measure resistance between terminals (3) and (4) of throttle sensor.

Specified resistance:
5 kΩ, max
[When gauge thickness is 0.35 mm (0.0138 in)]
1 MΩ, min
[When gauge thickness is 0.75 mm (0.0295 in)]

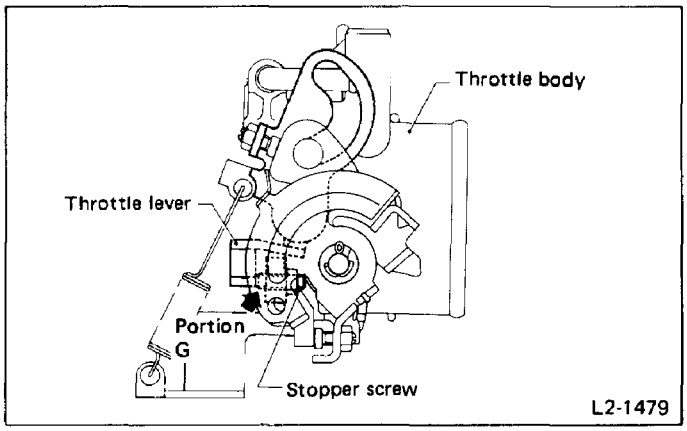

Fig. 35

3) Measure resistance between terminals (1) and (4 .

Specified resistance:
3 – 7 kΩ

4) Measure resistance between terminals (2) and (4 .

Specified resistance:
4.2 – 15 kΩ (Throttle valve fully closed)
0.1 – 11 kΩ (Throttle valve fully opened)
[Differential: 4 kΩ]

Ensure that resistance changes smoothly between the fully closed and fully opened throttle positions. If resistance is outside of specifications, replace the sensor.

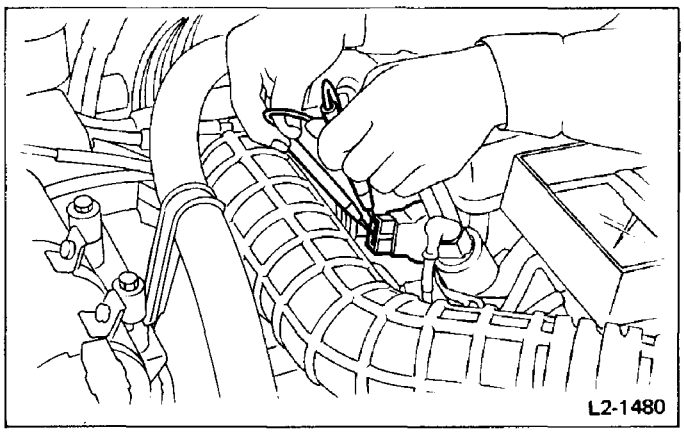

Fig. 36

By-pass Air Control Valve

[2700cc model only]

INSPECTION

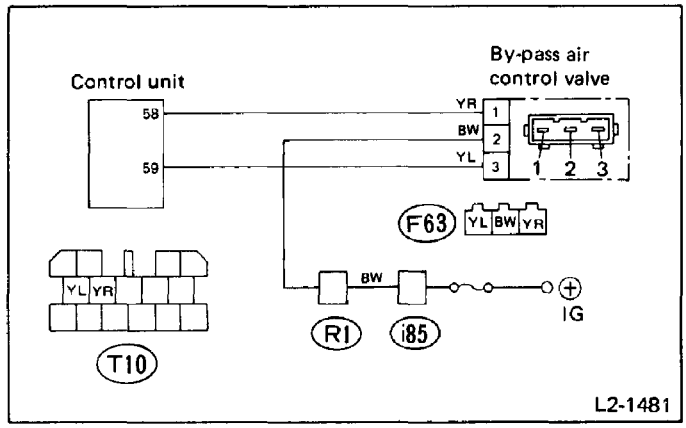

Fig. 37

1) Disconnect the connector from the by-pass air control valve.
Measure resistance between terminals (1) and (2) of by-pass air control valve.

Specified resistance:
9.5 – 11.5 Ω

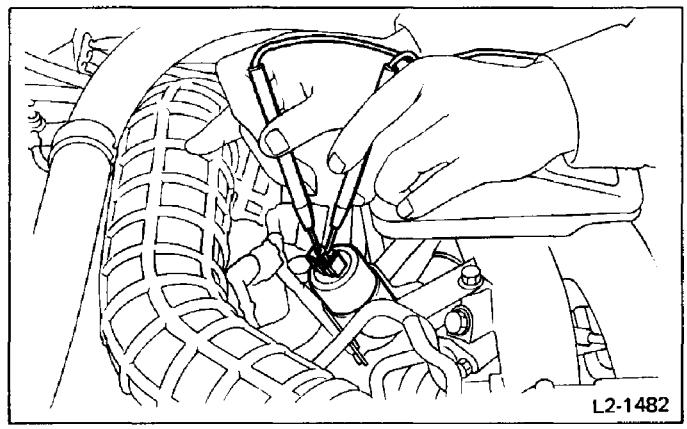

Fig. 38

2) Measure resistance between terminals (2) and (3) of by-pass air control valve.

Specified resistance:
8.5 – 10.5 Ω

3) Measure resistance between terminal (2) and valve body, and between terminal (3) and valve body.

Specified resistance:
Infinity (∞) Ω

If resistance is outside of specifications, replace the by-pass air control valve.

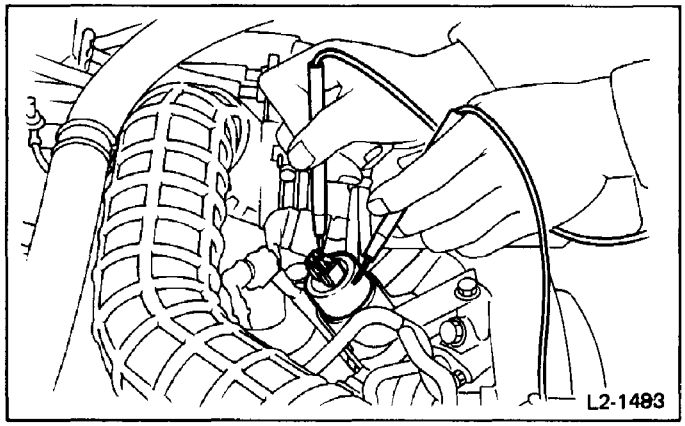

Fig. 39

Auxiliary Air Valve

[1800cc model only]

INSPECTION

1) Pinch the hose connecting the air intake duct and auxiliary air valve and observe how the engine speed changes.

State of engine	Engine speed
When engine is cold	Engine idle speed drops as the hose is pinched.
When engine is hot	Reduction in engine speed is within 100 rpm.

When pinching the hose, cover it with a rubber plate or the like for protection.

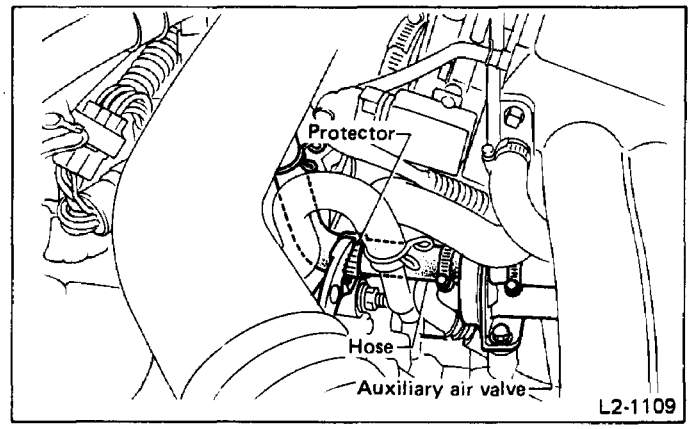

Fig. 40

2) As the engine is started, the auxiliary air valve is heated by the built-in heater and its shutter valve closes gradually. This causes the engine rpm to be lowered gradually until the specified idling rpm is reached.
If the engine speed will not drop to the idling rpm smoothly, the heater circuit or the heater power supply circuit may be faulty. In this case, perform the following checks;

(1) Check the resistance value of the auxiliary air valve.
Disconnect the connector of the auxiliary air valve and measure the resistance between the two terminals, using a circuit tester.

Resistance value must be other than zero (0) and infinity (∞).

If the resistance is zero (0) or infinity (∞), replace the auxiliary air valve with a new one.

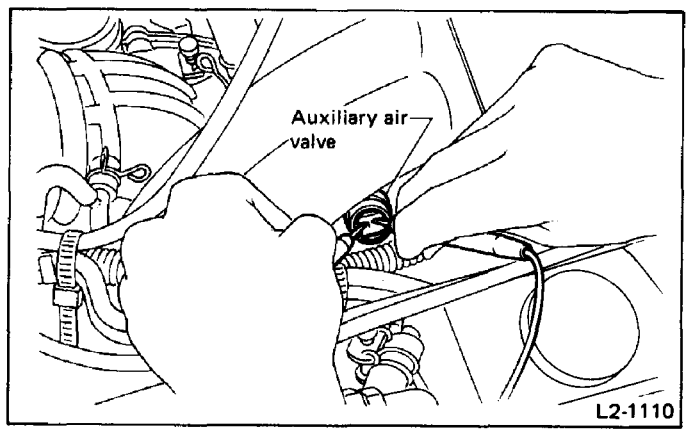

Fig. 41

(2) Check source voltage.
Disconnect the connector of the auxiliary air valve, and check voltage on the harness side.

Voltage (when engine is running):
Over 12V

If the voltage is 0V or lower than 12V, check the harness and connector for condition.

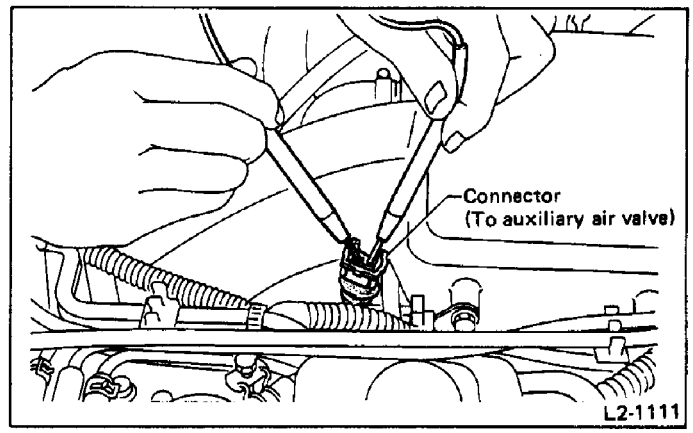

Fig. 42

3) If item 2) above is normal but only item 1) is faulty, the cause may be as follows:

	Cause of trouble	Symptom	Remedy
1	Sticking of shutter valve of auxiliary air valve. (Sticking in closed direction)	• Engine stalls easily when engine is cold.	Replace auxiliary air valve.
2	Sticking of shutter valve of auxiliary air valve. (Sticking in open direction)	• Engine rpm does not lower smoothly during warm-up operation. • Engine rpm remains high.	
3	Clogged air passage.	Same as ①	Check air passage, such as hose, etc. and clean.

Fuel Injector and Resistor

1800cc model

INSPECTION

Using a stethoscope or a long-type screwdriver, make sure of operating noise (clicking sound) of each injector (when idling or cranking engine). If this operating noise cannot be heard on any injector:

1) Disconnect the control unit connector.
Measure voltage across the body and terminals 49 (W), 50 (W), 51 (WL) and 52 (WL) of control unit connector (body side), respectively.

Specified voltage:
12V

If voltage is below 10V in any line, the affected harness from the battery to the control unit through the resistor and injector is broken or shorted.

2) Disconnect each fuel injector connector.
Measure resistance between the terminals of each injector.

Specified resistance:
2 – 3Ω

If resistance is greater than 1 MΩ, the affected circuit is broken. If 0 Ω, the circuit is shorted. Replace the injector.

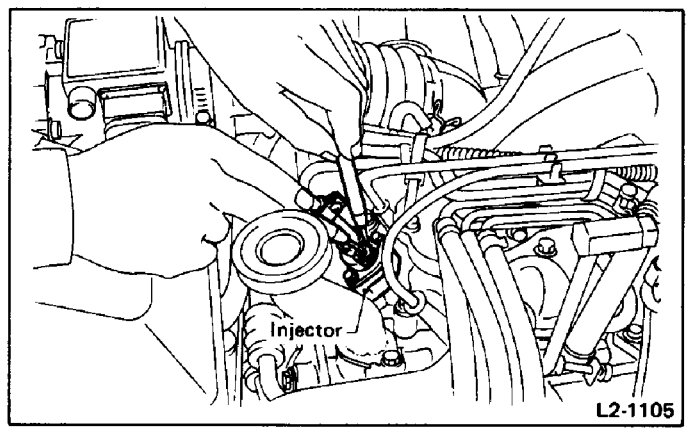

Fig. 43

3) Measure voltage across power terminals of each injector connector and the body.

Specified voltage:
12 V

If voltage is less than 10 V, the harness from the battery to the injector through the resistor is discontinued or shorted.

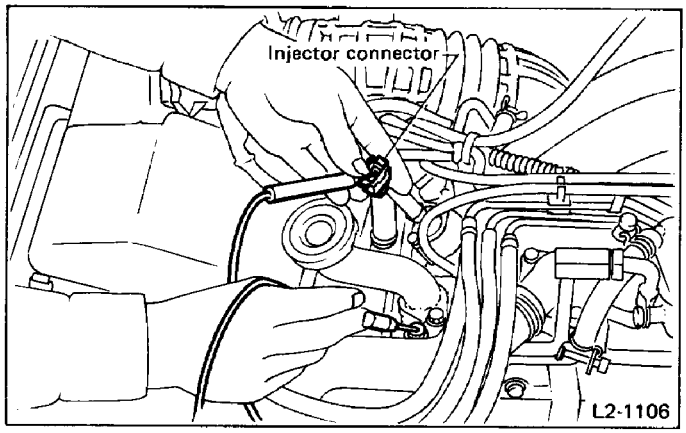

Fig. 44

4) Disconnect the connector from the resistor.
Measure resistance between terminals W and B of the resistor.

Specified resistance:
5.8 – 6.5 Ω

If resistance is outside specifications, replace the resistor.

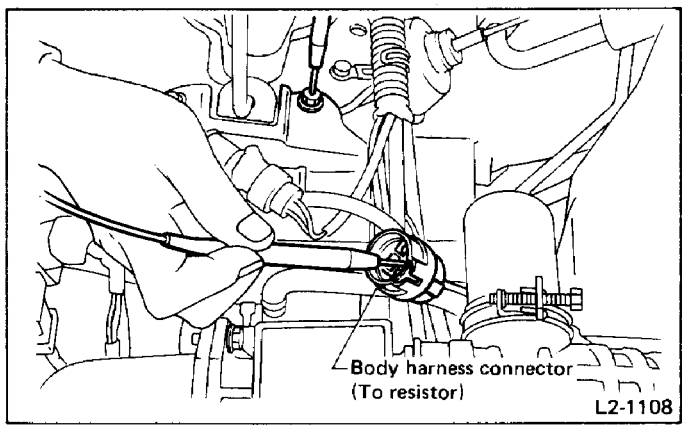

Fig. 45

5) Measure voltage across terminal 5 (R) of body harness connector and the body.

Specified voltage:
12 V

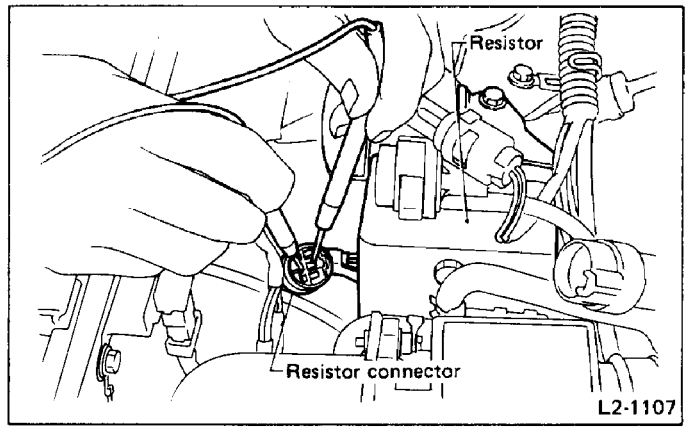

Fig. 46

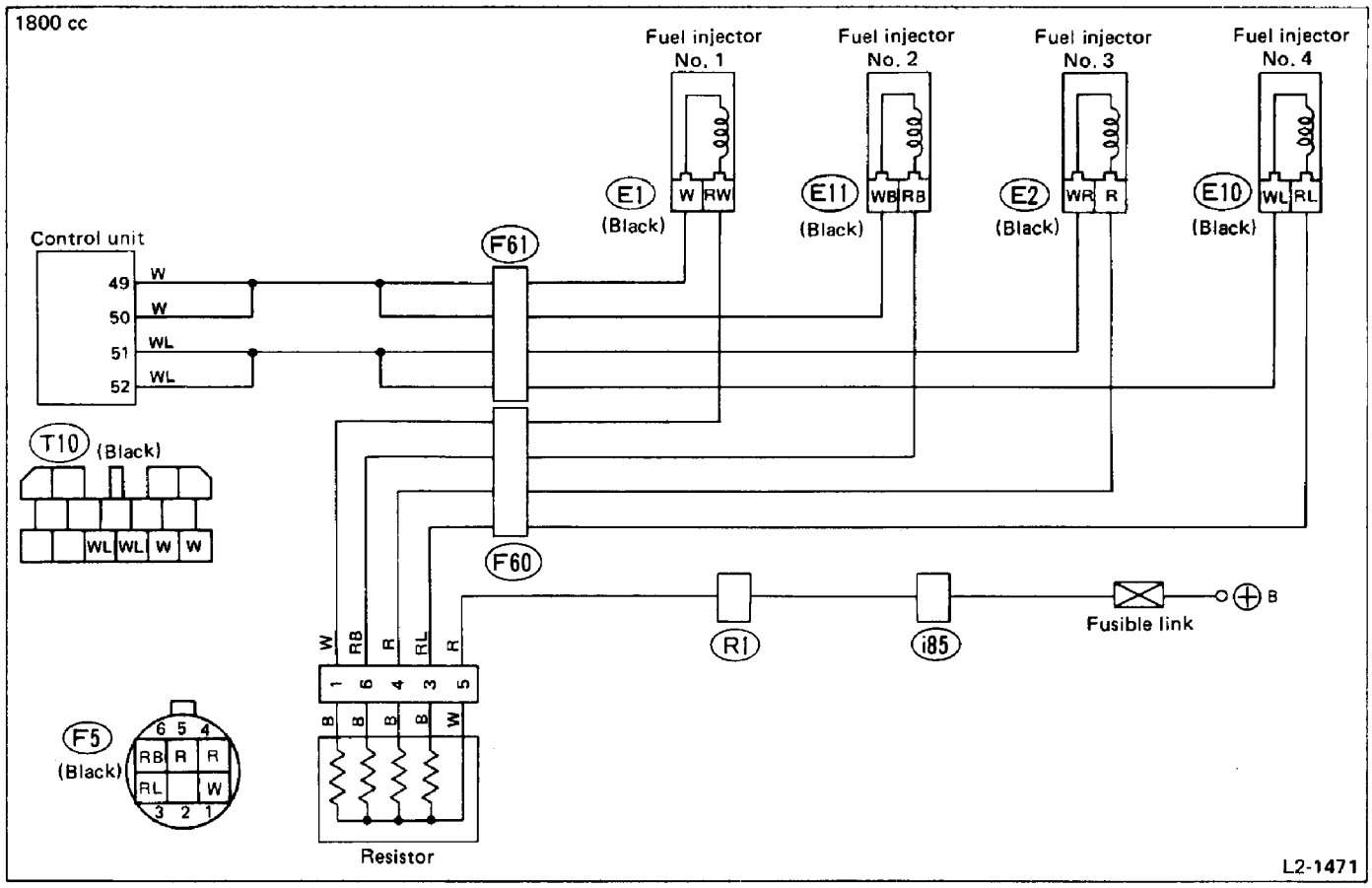

Fig. 47

2700cc model

INSPECTION

Using a stethoscope or a long-type screwdriver, make sure of operating noise (clicking sound) of each injector.

If this operating noise cannot be heard on any injector:

1) Disconnect the control unit connector.

Measure voltage across the body and terminals 49 (W), 50 (W), 51 (WR), 52 (WR), 53 (WY) and 54 (WY) of control unit connector (body side), respectively.

Specified voltage:
12 V

If voltage is below 10 V in any line, the affected harness from the battery to the control unit through the resistor and injector is broken or shorted.

2) Disconnect each fuel injector connector.

Measure resistance between the terminals of each injector.

Specified resistance:
Approx. 13.8 Ω

If resistance is greater than 1 MΩ, the affected circuit is broken. If 0 Ω, the circuit is shorted. Replace the injector.

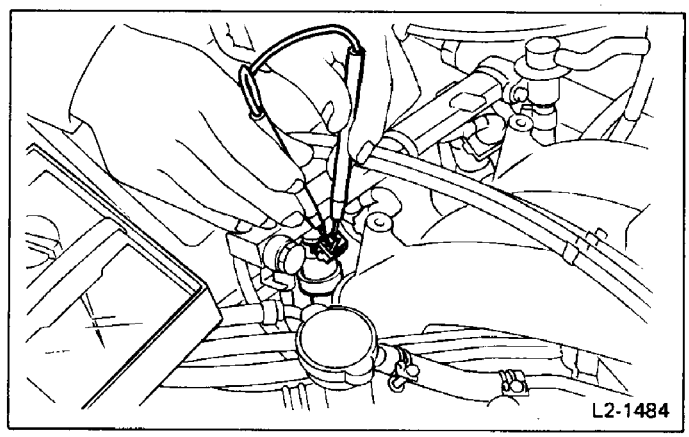

Fig. 48

3) Measure voltage across power terminals of each injector connector and the body.

Specified voltage:
12 V

If voltage is less than 10 V, the harness from the battery to the injector is discontinued or shorted.

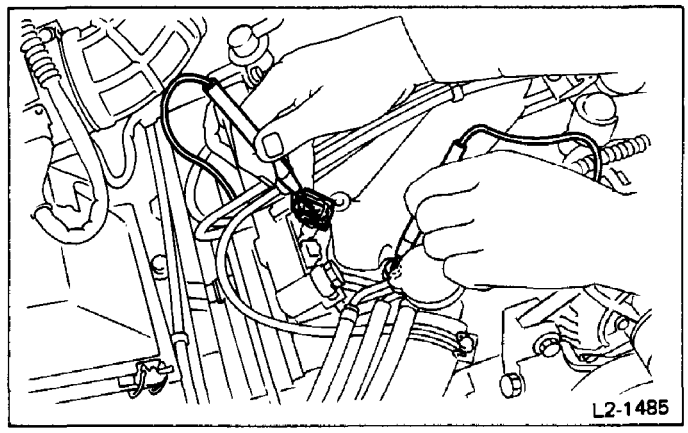

Fig. 49

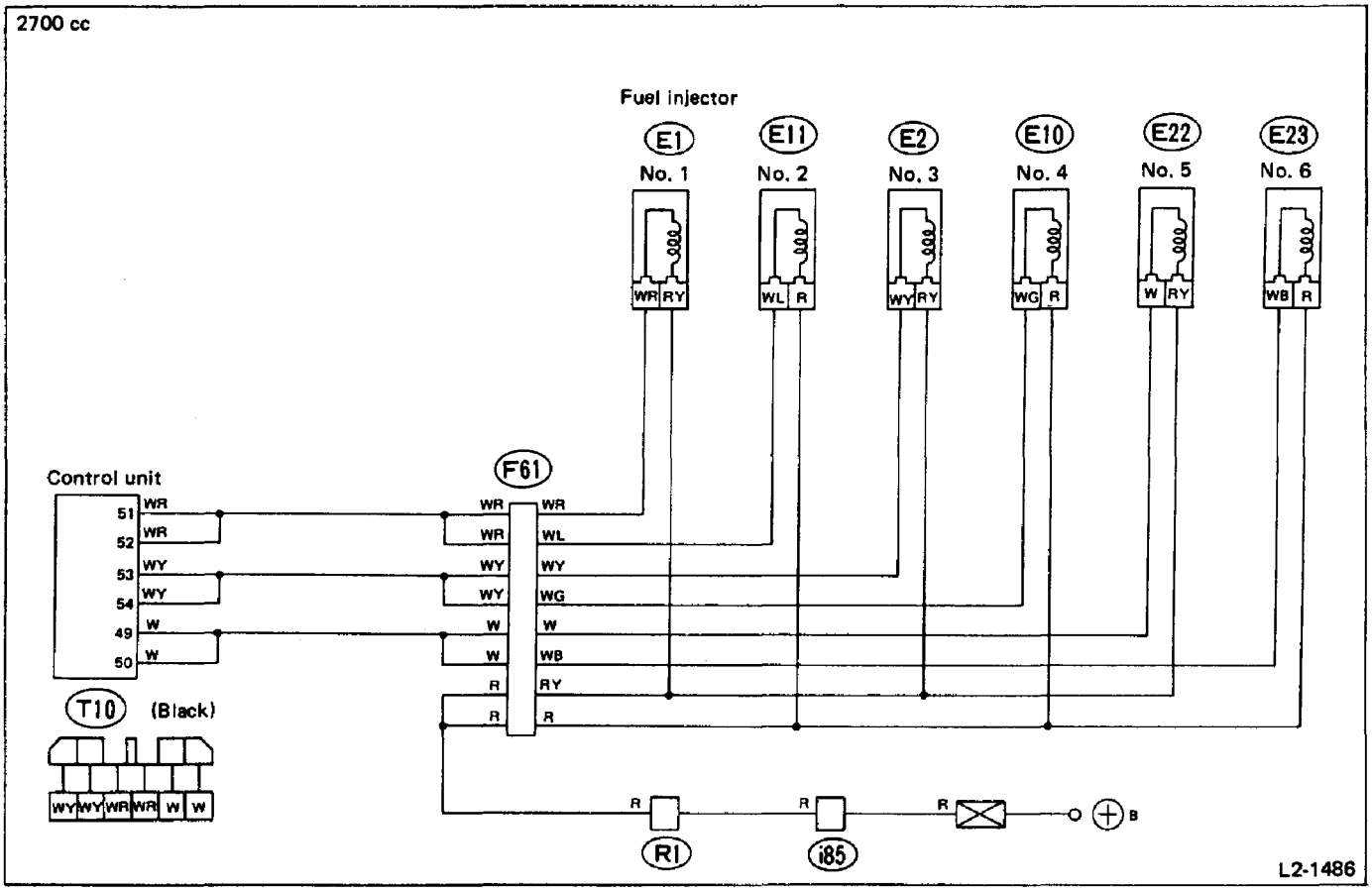

Fig. 50

Coolant Thermosensor

INSPECTION

Put the thermosensor in water of various temperatures and measure the resistance between terminals using a circuit tester.
If the resistance value is too much out of these ranges, replace the thermosensor with a new one.

Water temperature °C (°F)	Resistance value
−10 (14)	7 – 11.5 kΩ
20 (68)	2 – 3 kΩ
50 (122)	700 – 1,000Ω

Pressure Regulator

The pressure regulator adjusts the fuel pressure to 250.1 kPa (2.55 kg/cm^2, 36.3 psi) compared to the intake manifold pressure.

INSPECTION

Disconnect the fuel hose at the pressure regulator connecting portion and install a fuel gauge.

a. Before disconnecting the fuel hose, first disconnect the fuel pump connector and crank the engine (more than five seconds) to release the pressure in the fuel system. If the engine is started by this cranking, run it until it stops.
b. Be sure to clamp the hose at the connecting portion.

1) When checking with the engine running
(1) Measure the fuel pressure when the engine is at idle speed.

Standard:
177 – 206 kPa (1.8 - 2.1 kg/cm^2, 26 – 30 psi)

(2) Race the engine, and make sure the fuel pressure increases correspondingly.

2) When checking with the engine stopped
Set the diagnosis jumper for checking the MPFI system to ON, and then turn ON the key switch. This will cause the fuel pump to operate intermittently. Measure the fuel pressure in this state.

Standard:
Fuel pump ON
Approx. 255 kPa (2.6 kg/cm^2, 37 psi)
Fuel pump OFF
Approx. 226 kPa (2.3 kg/cm^2, 33 psi)

Air Intake System

Air Cleaner Assembly

REMOVAL AND INSTALLATION

1) Disconnect connector from air flow meter.
2) Remove engine harness from clip.
3) Loosen hose clamps securing air intake boot, and remove air intake boot connecting with air flow meter.
4) Remove air cleaner ASSY mounting bolts.
5) Move air cleaner ASSY toward engine, and take it out from body.

Installation is in the reverse order of removal procedure.

Chamber Assembly

REMOVAL AND INSTALLATION

1) Remove mud guard.
2) Remove washer tank.
3) Remove nuts, and remove chamber ASSY from body.

Installation is in the reverse order of removal procedure.

TROUBLESHOOTING

General Troubleshooting Table

*: The CHECK ENGINE light blinks.
*1: The CHECK ENGINE light blinks when contact is resumed during inspection (although poor contact is present in the D-check).
*2: The CHECK ENGINE light lights when the mixture is leaner than that specified and does not light (U-check) or blink (D-check) when the mixture is richer.
*3: The CHECK ENGINE light lights when abnormality is detected in the D-check mode if the idle switch persistently remains off with the acclerator pedal released.

Symbols shown in the table refer to the degree of possibility of the reason for the trouble ("Very often" to "Rarely").
◎ : Very often
○ : Sometimes
△ : Rarely
☆ : Occurs only in extremely low temperatures

TROUBLE		
1	Engine will not start	No initial combustion
2		Initial combustion occurs.
3		Engine stalls after initial combustion.
4	Rough idle and engine stall	
5	Inability to drive at constant speed	
6	Inability to accelerate and decelerate	
7	Engine does not return to idle.	
8	Afterburning in exhaust system	
9	Knocking	
10	Excessive fuel consumption	
11		
U	CHECK ENGINE light operation	U-check mode & read memory mode
D		D-check mode

TROUBLE No.										#		POSSIBLE CAUSE
1	2	3	4	5	6	7	8	9	10	U	D	
												AIR FLOW METER
		☆	◎				△	△	○	ON	ON	• Connector not connected
		△	◎	◎	◎		◎	○	△	ON	*1	• Poor contact of terminal
		☆	◎				△	○	△	ON	ON	• Short circuit
		☆	◎				△	△	○	ON	ON	• Discontinuity of wiring harness
		○	○	○	○		△	◎	○	*2	*2	• Performance characteristics unusual
												COOLANT THERMOSENSOR
	☆	○	☆		○		○	○	○	ON	ON	• Connector not connected
	△	△	◎	○	○		◎	△	○	ON	*1	• Poor contact of terminal
	☆	○	☆		○		○	○	○	ON	ON	• Short circuit
	☆	○	☆		○		○	○	○	ON	ON	• Discontinuity of wiring harness
	☆	○	☆		○		◎	◎	◎	*2	*2	• Performance characteristics unusual
												IDLE SWITCH OF THROTTLE SENSOR
				○	◎		◎			OFF	ON	• Connector not connected
				○			○			ON	*1	• Poor contact of terminal
				○	△		○			ON	ON	• Short circuit
					△		○			OFF	ON	• Discontinuity of wiring harness
							○			OFF	*3	• Improper adjustment
1	2	3	4	5	6	7	8	9	10	U	D	

#: CHECK ENGINE light

TROUBLE No.											#		POSSIBLE CAUSE
1	2	3	4	5	6	7	8	9	10		U	D	
													THROTTLE SENSOR
					◎		◎				ON	ON	• Connector not connected
				◎	◎		◎				ON	*1	• Poor contact of terminal
△					◎		◎				ON	ON	• Short circuit
					◎		◎				ON	ON	• Discontinuity of wiring harness
	○	○	△	○	◎		◎				OFF	*	• Performance characteristics unusual
													PRESSURE REGULATOR
	○	○	◎	◎	◎	○		△			*2	*2	• Sensing hose not connected
	△				○		○		◎		OFF	*	• Fuel pressure too high
○	○	○	◎	◎	◎		◎				*2	*2	• Fuel pressure too low
													FUEL INJECTOR
	◎	◎	○	○	○		○	○			ON	*1	• Connector not connected
	○	○	○	◎	◎		○				ON	ON	• Poor contact of terminal
	◎	◎	○	○	○		○				ON	ON	• Short circuit
	◎	◎	○	○	○		○	○			ON	ON	• Discontinuity of wiring harness
	△	○	○	△	○		○	△	○		*2	*2	• Performance characteristics unusual
	△	○	△	△	○		○	△			*2	*2	• Clogged filter
	△	○	○	○	○		○	△			*2	*2	• Clogged nozzle
○											OFF	*	• Stuck open
			○				○		○		OFF	*	• Slight leakage from seat
													CRANK ANGLE SENSOR
◎											ON	ON	• Connector disconnected
	○	○	◎	◎	◎		○	○			ON	*1	• Poor contact of terminal
◎											ON	ON	• Short circuit
◎											ON	ON	• Discontinuity of wiring harness
													POWER TRANSISTOR OF IGNITION COIL
◎											OFF	*	• Connector not connected
	○	○	◎	◎	◎		○				OFF	*	• Poor contact of terminal
◎											OFF	*	• Short circuit
◎											OFF	*	• Discontinuity of wiring harness
													AIR REGULATOR [1800 cc model only]
						◎					OFF	*	• Connector not connected
	○	◎	○								OFF	*	• Short circuit
						◎					OFF	*	• Discontinuity of wiring harness
													KNOCK SENSOR [2700 cc model only]
								◎			ON	ON	• Connector not connected
				○	○						ON	ON	• Short circuit
								◎			ON	ON	• Discontinuity of wiring harness
1	2	3	4	5	6	7	8	9	10		U	D	

#: CHECK ENGINE light

TROUBLE No.											#		POSSIBLE CAUSE
1	2	3	4	5	6	7	8	9	10	11	U	D	
													AIR CONTROL VALVE [2700 cc model only]
	○	△	◎								ON	ON	• Connector not connected
	△	○	◎								ON	*1	• Poor contact of terminal
			○				○				ON	ON	• Short circuit
	○	△	◎								ON	ON	• Discontinuity of wiring harness
			◎			◎					OFF	*	• IAS improperly adjusted
					◎	◎					ON	*	• Stuck open
	○	○	◎								OFF	*	• Stuck closed
													ENGINE GROUNDING
○											ON		• Disconnecting of engine grounding terminal at intake manifold
◎	◎	○	◎	◎	◎						ON	*1	• Poor contact of engine grounding terminal
○											ON		• Discontinuity of wiring harness for engine grounding
1	2	3	4	5	6	7	8	9	10	11	U	D	

#: CHECK ENGINE light

Self-diagnosis System

General

The self-diagnosis system detects and indicates a fault in various inputs and outputs of the complex electronic control. The warning lamp (CHECK ENGINE light) on the instrument panel indicates occurrence of a fault or trouble, and also the light emitting diode (LED) in the control unit indicates a trouble code.
Further, against such a failure of sensors as may disable the drive, the fail-safe function is provided to ensure the minimal driveability.

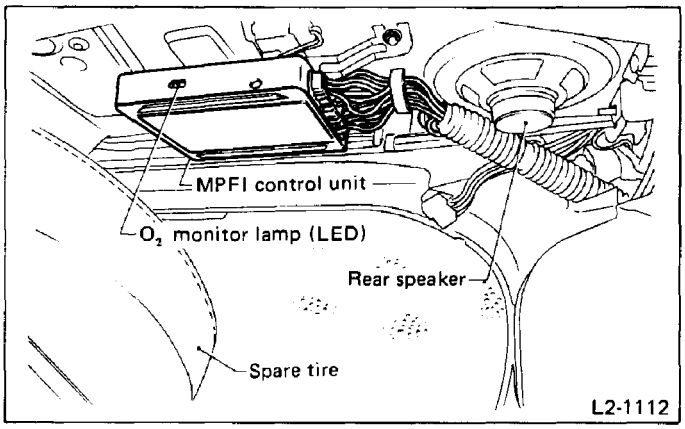

Fig. 51

SELF-DIAGNOSIS FUNCTION

The MPFI control unit executes the computational processing on the input information received from various sensors and produces the output information for driving the fuel injector, fuel pump, etc.
Along with this computational processing, it reads out all the input/output information to examine matching with the predetermined levels (proper values or ranges). If a predetermined level is not satisfied, i.e., a fault is found, the warning lamp is signaled to a driver. In this fashion, the self-diagnosis function is performed.

FAIL-SAFE FUNCTION

For the part which has been judged faulty in the self-diagnosis, the MPFI control unit generates the associated pseudo signal (only when convertible to electric signal) and carries out the computational processing. In this fashion, the fail-safe function is performed.

Function of Self-diagnosis

The self-diagnosis function has four modes: U-check mode, Read memory mode, D-check mode and Clear memory mode. Two connectors (Read memory and Test mode) and two lamps (CHECK ENGINE light and O_2 monitor) are used. The connectors are for mode selection and the lamps monitor the type of problem.

RELATIONSHIP BETWEEN MODES AND CONNECTORS

Mode	Engine	Read memory connector	Test mode connector
U-check	Ignition ON	DISCONNECT	DISCONNECT
Read memory	Ignition ON	CONNECT	DISCONNECT
D-check	Ignition ON	DISCONNECT	CONNECT
Clear memory	Ignition ON (engine on)	CONNECT	CONNECT

U-CHECK MODE

The U-check is a user-oriented mode in which only the MPFI components necessary for start-up and drive are diagnosed. On occurrence of a fault, the warning lamp (CHECK ENGINE light) is lighted to indicate to the user that the dealer's inspection is necessary. The diagnosis of other parts which do not give significant adverse effect to start-up and drive are excluded from this mode in order to avoid unnecessary uneasiness to be taken by the user.

READ MEMORY MODE

This mode is used by the dealer to read past problems (even when the vehicle's monitor lamps are off). It is most effective in detecting poor contact or loose connections of connectors, harnesses, etc.

D-CHECK MODE

This mode is used by the dealer to check the entire MPFI system and detect faulty parts.

CLEAR MEMORY MODE

This mode is used by the dealer to clear the trouble code from the memory after the affected part is repaired.

Basic Operation of Self-diagnosis System

NO TROUBLE

○ : CONNECT X : DISCONNECT

	Engine	Read memory connector	Test mode connector	CHECK ENGINE light	O_2 monitor lamp	Remarks
1	ON	X	X	OFF	O_2 monitor	
2	ON	○	X	OFF	O_2 monitor	
*3	ON	X	○	** OFF → Blink	OFF	Vehicle specification code is outputted when CHECK ENGINE light is OFF.
*4	ON	○	○	OFF → Blink	OFF	All memory stored in control unit is cleared after CHECK ENGINE light blinks.
5	OFF (Ignition switch ON)	○	X	ON	Vehicle specification code	Before starting the engine, the self-diagnosis system assumes the engine to be in NO TROUBLE condition.
6	OFF (Ignition switch ON)	X	X	ON	Vehicle specification code	
7	OFF (Ignition switch ON)	X	○	ON	Vehicle specification code	
8	OFF (Ignition switch ON)	○	○	ON	Vehicle specification code	

TROUBLE

	Engine	Read memory connector	Test mode connector	CHECK ENGINE light	O_2 monitor lamp	Remarks
9	ON	X	X	ON	Trouble code	
10	ON	○	X	ON	Trouble code (memory)	
*11	ON	X	○	** OFF → ON	Trouble code	Vehicle specification code is outputted when CHECK ENGINE light is OFF.
*12	ON	○	○	** OFF → ON	Trouble code	
13	OFF (Ignition switch ON)	○	X	ON	Trouble code (memory)	
14	STALL (Ignition switch ON)	X	X	ON	Trouble code	
15	STALL (Ignition switch ON)	X	○	ON	Trouble code	
16	STALL (Ignition switch ON)	○	○	ON	Trouble code	

***: Ignition timing is set to 20° BTDC (when the engine is on, test mode connector is connected, and idle switch is ON).**

****: CHECK ENGINE light remains off until engine is operated at speed greater than 2,000 rpm for at least 40 seconds.**

List of Trouble Codes

Trouble code	Item	U-check	D-check	Page
11	Crank angle sensor (No reference pulse)	O	O	71
12	Starter switch (Continuously in ON position or continuously in OFF position while cranking)	O	O	73
13	Crank angle sensor (No position pulse)	O	O	74
14	Fuel injectors *#1 and #2, **#5 and #6 (Abnormal injector output)	O	O	*76 **77
15	Fuel injectors *#3 and #4, **#1 and #2 (Abnormal injector output)	O	O	*78 **79
21	Water temperature sensor (Open or shorted circuit)	O	O	80
**22	Knock sensor (Open or shorted circuit)	O	O	81
23	Air flow meter (Open or shorted circuit)	O	O	82
**24	By-pass air control valve (Open or shorted circuit)	O	O	83
**25	Fuel injectors #3 and #4 (Abnormal injector output)	O	O	84
31	Throttle sensor (Open or shorted circuit)	O	O	*85 **86
32	O_2 sensor (Abnormal sensor signal)	O	O	87
33	Car-speed sensor (No signal is present during operation)	O	O	88
35	Purge control solenoid valve (Solenoid switch continuously in ON or OFF position)	–	O	89
41	System too lean	O	O	90
42	Idle switch (Abnormal idle switch signal in relation to throttle sensor output)	–	O	91
51	Neutral switch (No signal is present)	–	O	92

*: 1800 cc model **: 2700 cc model

List of Specification Codes

		1800 cc model	2700 cc model
MT	49-state and Canada	05	01
	California	06	02
AT	49-state and Canada	07	03
	California	08	04

How to Read Trouble Codes (Flashing)

The O_2 monitor lamp flashes the code corresponding to the faulty part.
The long segment (1.2 sec on) indicates a "ten", and the short segment (0.2 sec on) signifies a "one".

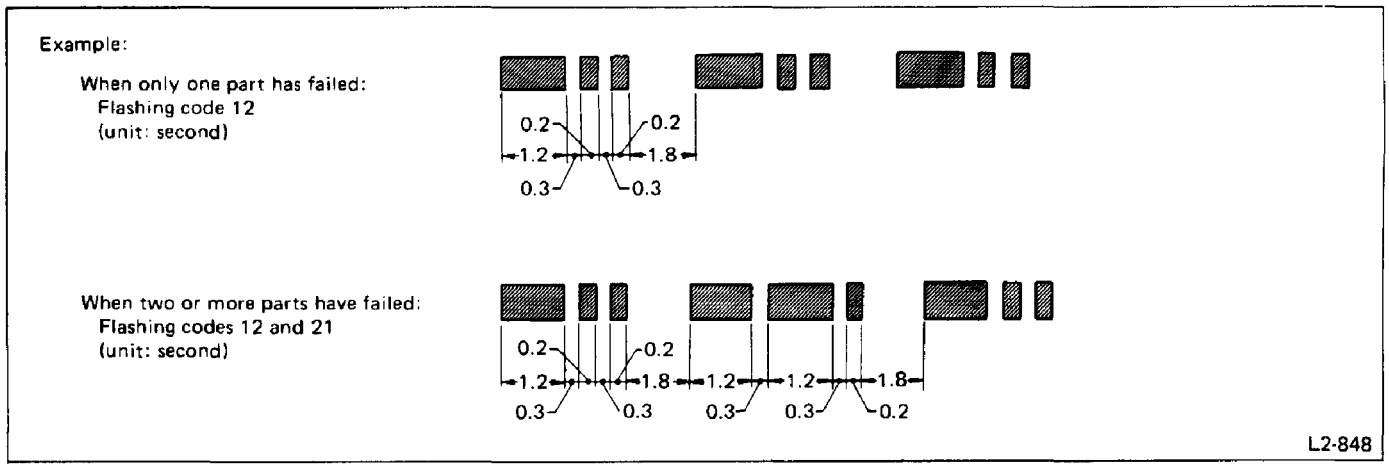

Fig. 52

MPFI System Layout

1800 cc model

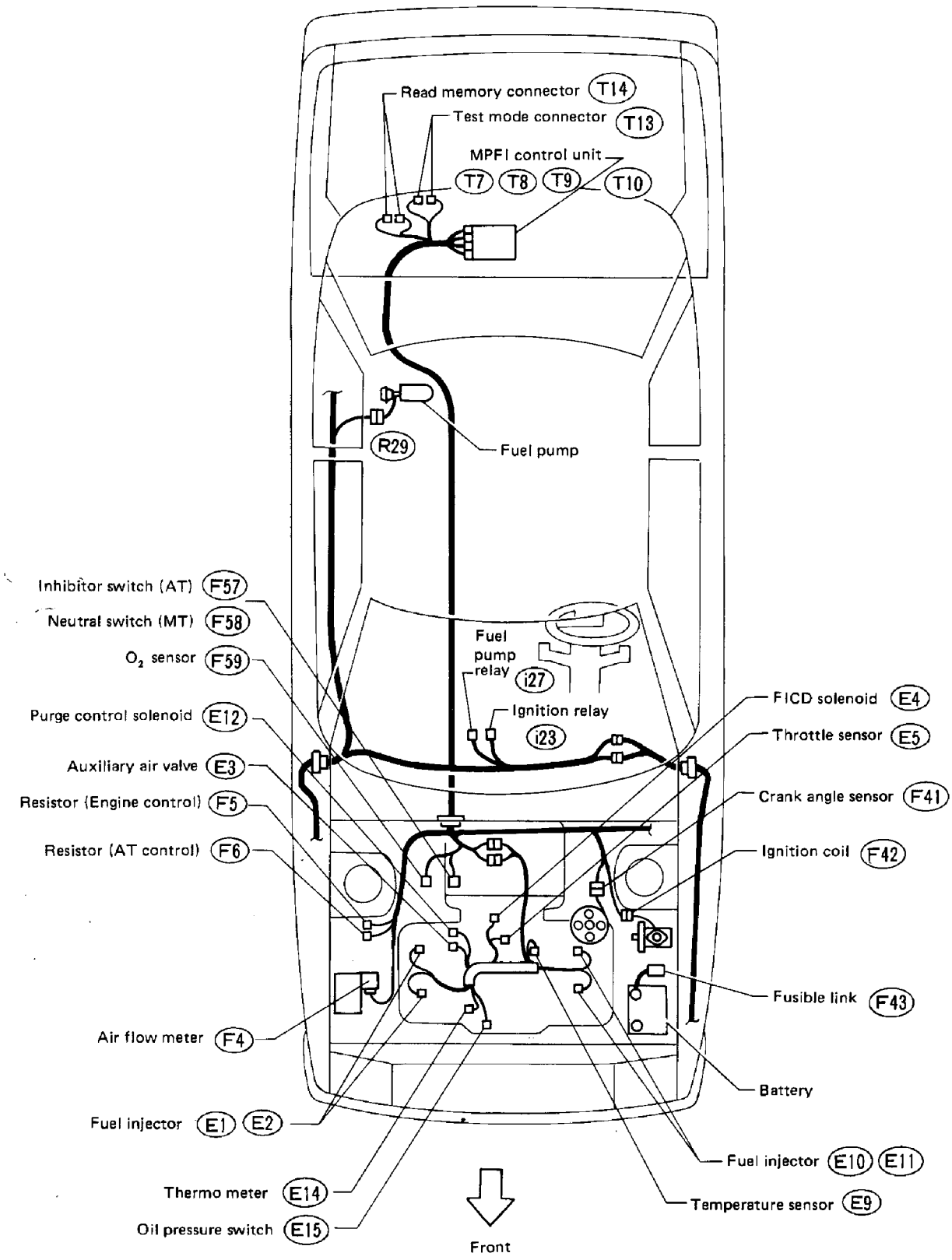

Fig. 55

L2-1489

2700 cc model

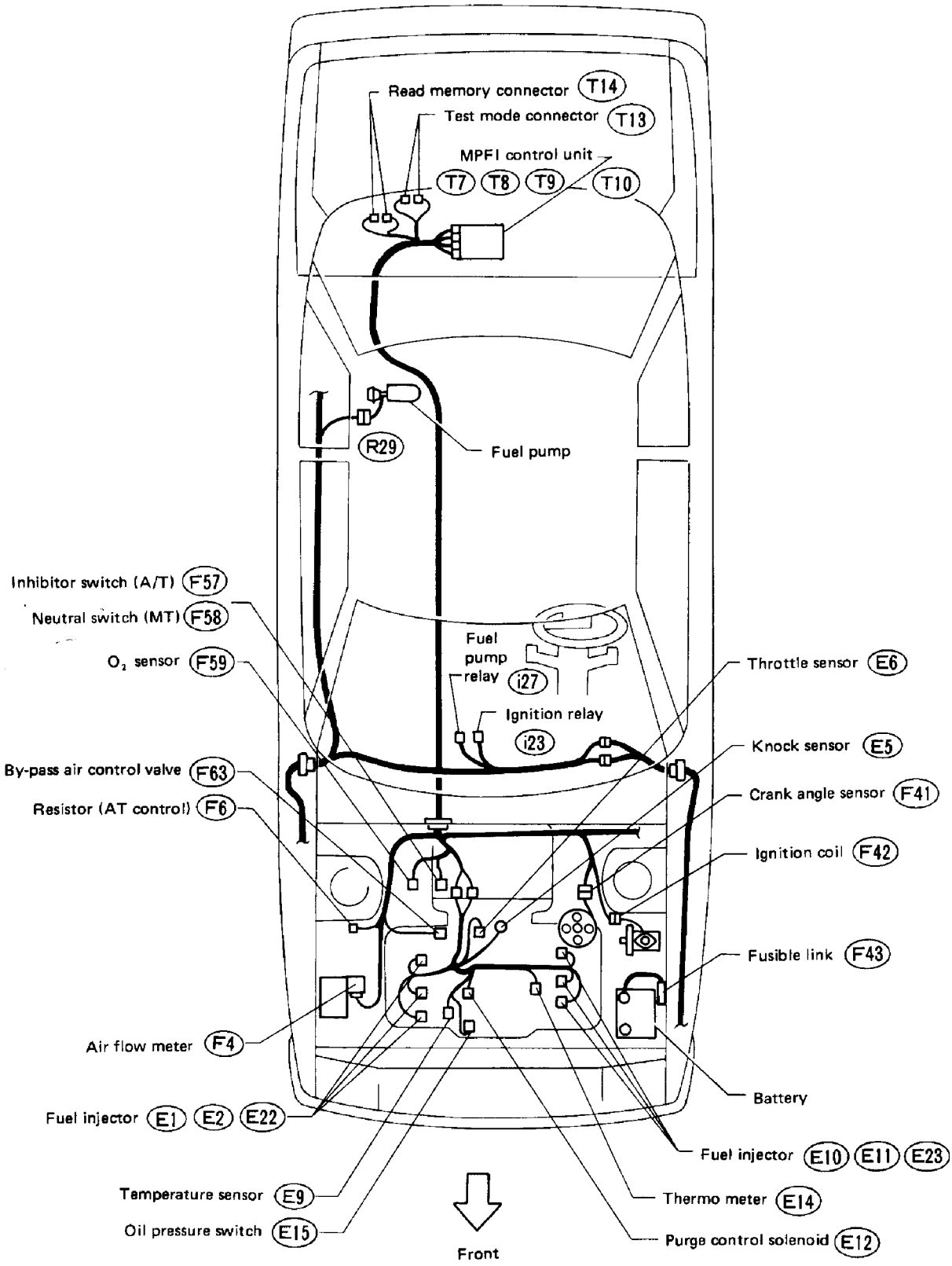

Fig. 56 L2-1490

Connector Terminal

CONTROL UNIT CONNECTOR [1800 cc model]

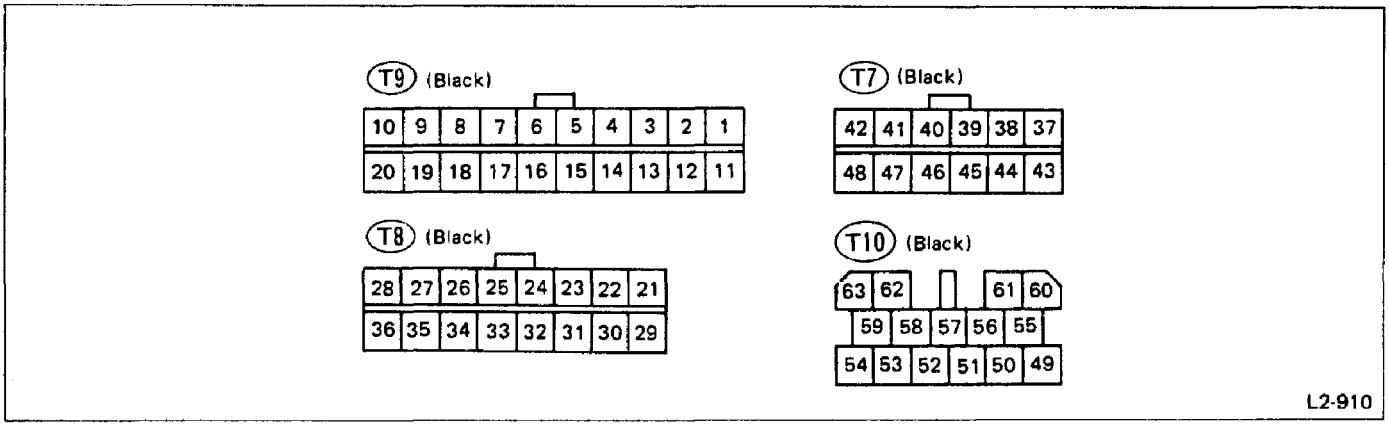

Fig. 57

1	YR	Check connector	32	Br	Test mode connector
2	W	Air flow meter (signal)	33	LgW	Read-memory connector
3	GL	Purge control solenoid	34	–	–
4	GY	Neutral switch (MT)	35	WR	Control unit power (input)
	YL	Inhibitor switch (AT)	36	–	–
5	B	Air flow meter (ground)	37	WY	Ignition output (power transistor)
6	LB	Fuel pump relay	38	LgR	Air flow meter (burn-off output)
7	R	Crank angle sensor (power)	39	GW	Self-shutoff output
8	B	Crank angle sensor (reference)	40	RY	CHECK ENGINE light
9	WB	Water temperature sensor	41	–	–
10	BR	Ground	42	RB	A/C cut control
11	–	–	43	WY	Ignition output (power transistor)
12	W	Air flow meter (power)	44	RL	Check connector
13	–	–	45	GB	Check connector
14	YW	Inhibitor switch (AT)	46	L	Check connector
15	Lg	Inhibitor switch (AT)	47	R	Trouble code output
16	BR	Throttle sensor (ground)	48	W	O_2 sensor
17	W	Crank angle sensor (position signal)	49	W	Fuel injector #1, #2
18	–	–	50	W	Fuel injector #1, #2
19	BW	Ignition switch signal	51	WL	Fuel injector #3, #4
20	BR	Ground	52	WL	Fuel injector #3, #4
21	W	Throttle sensor (power supply)	53	–	–
22	B	Throttle sensor (signal)	54	–	–
23	L	Air conditioner signal	55	W	Fuel pump control
24	BW (MT) BY (AT)	Starter signal	56	B	Ground (ignition)
25	LW	Idle switch signal	57	B	Ground (ignition)
26	–	–	58	–	–
27	WR	Control unit power (input)	59	G	Auxiliary air valve control
28	BY	Specification code	60	BR	Ground (fuel injector)
29	YR	Car-speed sensor	61	BR	Ground (fuel injector)
30	BR	Identification of AT and MT	62	R	Power (fuel injector)
31	–	–	63	–	–

CONTROL UNIT CONNECTOR [2700 cc model]

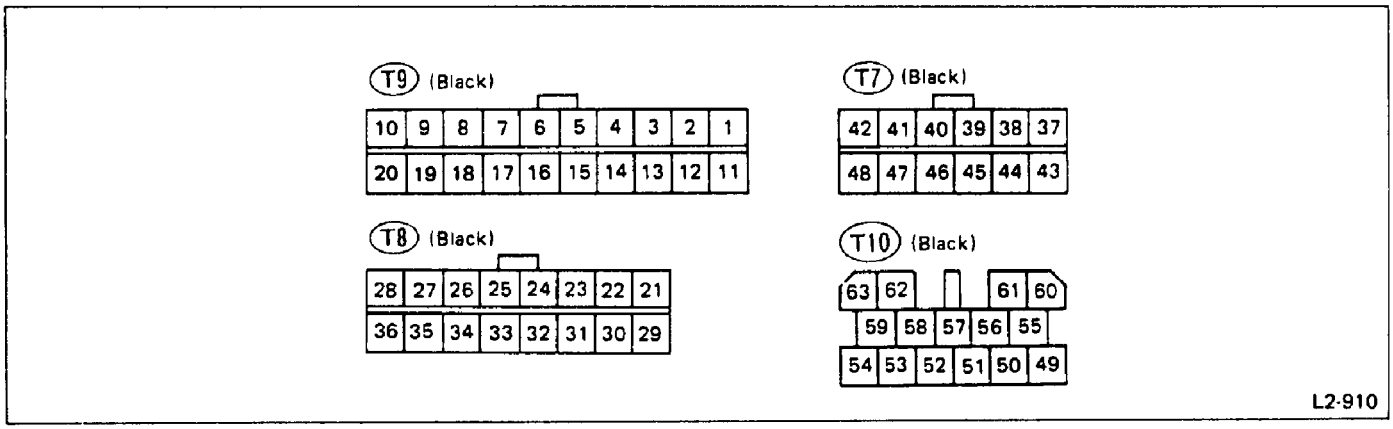

Fig. 58

1	YR	Check connector	32	Br	Test mode connector
2	W	Air flow meter (signal)	33	LgW	Read-memory connector
3	GL	Purge control solenoid	34	–	–
4	GY	Neutral switch (MT)	35	WR	Control unit power (input)
	YL	Inhibitor switch (AT)	36	R	Knock sensor
5	B	Air flow meter (ground)	37	WY	Ignition output (power transistor)
6	LB	Fuel pump relay	38	LgR	Air flow meter (burn-off output)
7	R	Crank angle sensor (power)	39	GW	Self-shutoff output
8	G	Crank angle sensor (position signal)	40	RY	CHECK ENGINE light
9	WB	Water temperature sensor	41	–	–
10	BR	Ground	42	RB	A/C cut control
11	–	–	43	WY	Ignition output (power transistor)
12	R	Air flow meter (power)	44	RL	Check connector
13	–	–	45	GB	Check connector
14	YW	Inhibitor switch (AT)	46	L	Check connector
15	Lg	Inhibitor switch (AT)	47	R	Trouble code output
16	BR	Throttle sensor (ground)	48	W	O_2 sensor
17	W	Crank angle sensor (reference)	49	W	Fuel injector #5, #6
18	–	–	50	W	Fuel injector #5, #6
19	BW	Ignition switch signal	51	WR	Fuel injector #1, #2
20	BR	Ground	52	WR	Fuel injector #1, #2
21	W	Throttle sensor (power supply)	53	WY	Fuel injector #3, #4
22	B	Throttle sensor (signal)	54	WY	Fuel injector #3, #4
23	L	Air conditioner signal	55	B	Fuel pump control
24	BW (MT) BY (AT)	Starter signal	56	B	Ground (ignition)
25	LW	Idle switch signal	57	B	Ground (ignition)
26	–	–	58	YR	By-pass air control
27	WR	Control unit power (input)	59	YL	By-pass air control
28	–	–	60	BR	Ground (fuel injector)
29	YR	Car-speed sensor	61	BR	Ground (fuel injector)
30	BR	Identification of AT and MT	62	R	Power (fuel injector)
31	LB	Specification code	63	Br	Power steering control

Engine-to-body harness connector (body side) . . . (F61) [1800 cc model]

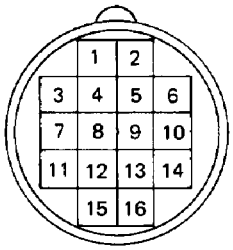

L2-1491

Fig. 59

1	WB	Water temperature sensor
2	BR	Ground
3	–	–
4	W	Fuel injector #2
5	BR	Ground
6	W	Fuel injector #1
7	WL	Fuel injector #4
8	–	–
9	WL	Fuel injector #3
10	–	Shield
11	B	Ground
12	G	Auxiliary air valve
13	GL	Purge control solenoid
14	–	–
15	BR	Ground
16	BY	Specification code signal

Engine-to-body harness connector (body side) . . . (F60) (Black) [1800 cc model]

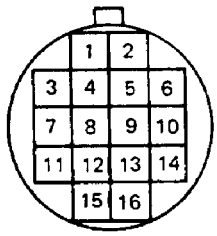

L2-912

Fig. 60

1	BR	Ground
2	YB	Oil pressure
3	W	Fuel injector #1 (power)
4	YG	Water temperature gauge
5	RB	Fuel injector #2 (power)
6	L	Air conditioner signal
7	LW	Idle switch (signal)
8	R	Fuel injector #3 (power)
9	W	Throttle sensor (power)
10	RL	Fuel injector #4 (power)
11	L	Auxiliary air valve
12	B	Throttle sensor
13	BR	Throttle sensor (ground)
14	B	Ground
15	BW	Solenoid (power)
16	BR	Ground

Engine-to-body harness connector (body side) . . . (F60) (Black)
[2700 cc model]

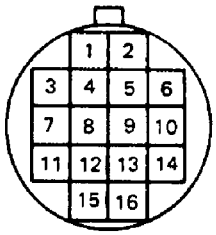

L2-912

Fig. 61

1	BR	Ground
2	BR	Ground
3	W	Fuel injector #5
4	WR	Fuel injector #1
5	W	Fuel injector #6
6	WR	Fuel injector #2
7	WY	Fuel injector #3
8	B	Ground
9	B	Ground
10	WY	Fuel injector #4 (signal)
11	R	Fuel injector (power)
12	R	Fuel injector (power)
13	YG	Water temperature gauge
14	YB	Oil pressure
15	R	Knock sensor
16	–	Shield

Engine-to-body harness connector (body side) . . . (F61)
[2700 cc model]

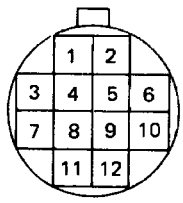

L2-1492

Fig. 62

1	BR	Ground
2	BR	Ground
3	WB	Water temperature sensor
4	–	–
5	GL	Purge control solenoid
6	BW	Purge control solenoid
7	BR	Throttle sensor (ground)
8	W	Throttle sensor (power)
9	B	Throttle sensor (signal)
10	LW	Idle switch (signal)
11	–	–
12	BR	Ground

Air flow meter connector . . . (F4) (Black)

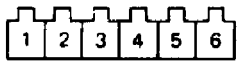

L2-913

Fig. 63

1	LgR	Control unit (burn-off output)
2	*W **R	Control unit (power)
3	B	Ground (control unit)
4	BR	Ground (intake manifold)
5	W	Control unit (sensor signal)
6	–	———

*: 1800 cc model **: 2700 cc model

Ignition coil (power transistor) . . . (F42) (Black)

L2-860

Fig. 64

1	BW	Power supply
2	WY	Control unit (ignition control signal)

Crank angle sensor . . . (F41) (Black)

Fig. 65

1	BR	Control unit (ground)
2	*B **G	Control unit (position signal)
3	W	Control unit (reference signal)
4	R	Control unit (power supply)

*: 1800 cc model **: 2700 cc model

Dropping resistor . . . (F5) (Black)
[1800 cc model only]

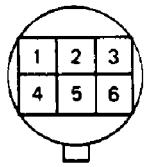

L2-917

Fig. 66

1	W	Fuel injector #1
2	–	———
3	RL	Fuel injector #2
4	R	Fuel injector #3
5	R	Power
6	RB	Fuel injector #4

Fuel injector . . . (E1) (E11) (E2) (E10) (E22) (E23)

L2-918

Fig. 67

[1800 cc model]

	#1	#2	#3	#4	
1	W	WB	WR	WL	Control unit (fuel injector control)
2	RW	RB	R	RL	Power (dropping resistor)

[2700 cc model]

	#1	#2	#3	#4	#5	#6	
1	WR	WL	WY	WG	W	WR	Control unit (fuel injector control)
2	RY	R	RY	R	RY	R	Power

By-pass air control valve . . . (F63)
[2700 cc model only]

1	YL	Control unit (Close signal)
2	BW	Power
3	YR	Control unit (Open signal)

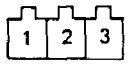

L2-1493

Fig. 68

Auxiliary air valve . . . (E3) **(Sky blue)**
[1800 cc model only]

1	B	Control unit (Auxiliary air control)
2	L	Power

L2-918

Fig. 69

Throttle sensor . . . (E5) (Black)

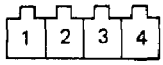

L2-1115

Fig. 70

[1800 cc model]

1	G	Control unit (sensor signal)
2	W	Control unit (power)
3	B	Control unit (ground)
4	LW	Control unit (idle switch)

[2700 cc model]

1	BW	Control unit (power)
2	GB	Control unit (sensor signal)
3	GY	Control unit (idle switch)
4	B	Control unit (ground)

Purge control solenoid valve . . . (E12)

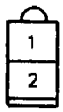

Fig. 71

L2-856

1	GL	Control unit (purge control)
2	BW	Power

Water temperature sensor . . . (E9)

L2-918

Fig. 72

1	WB	Control unit (sensor signal)
2	BR	Ground

Fuel pump relay . . . (i27) (Brown)

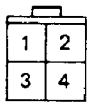

L2-859

Fig. 73

1	BW	Power (ignition)
2	R	Power
3	LB	Control unit
4	L	Fuel pump and auxiliary air valve

Ignition relay . . . (i23) (Black)

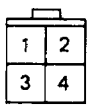

L2-859

Fig. 74

1	GW	Power (ignition)
2	R	Power
3	B	Ground
4	WB	Control unit

Troubleshooting Chart for Self-diagnosis System

Basic Troubleshooting Procedures

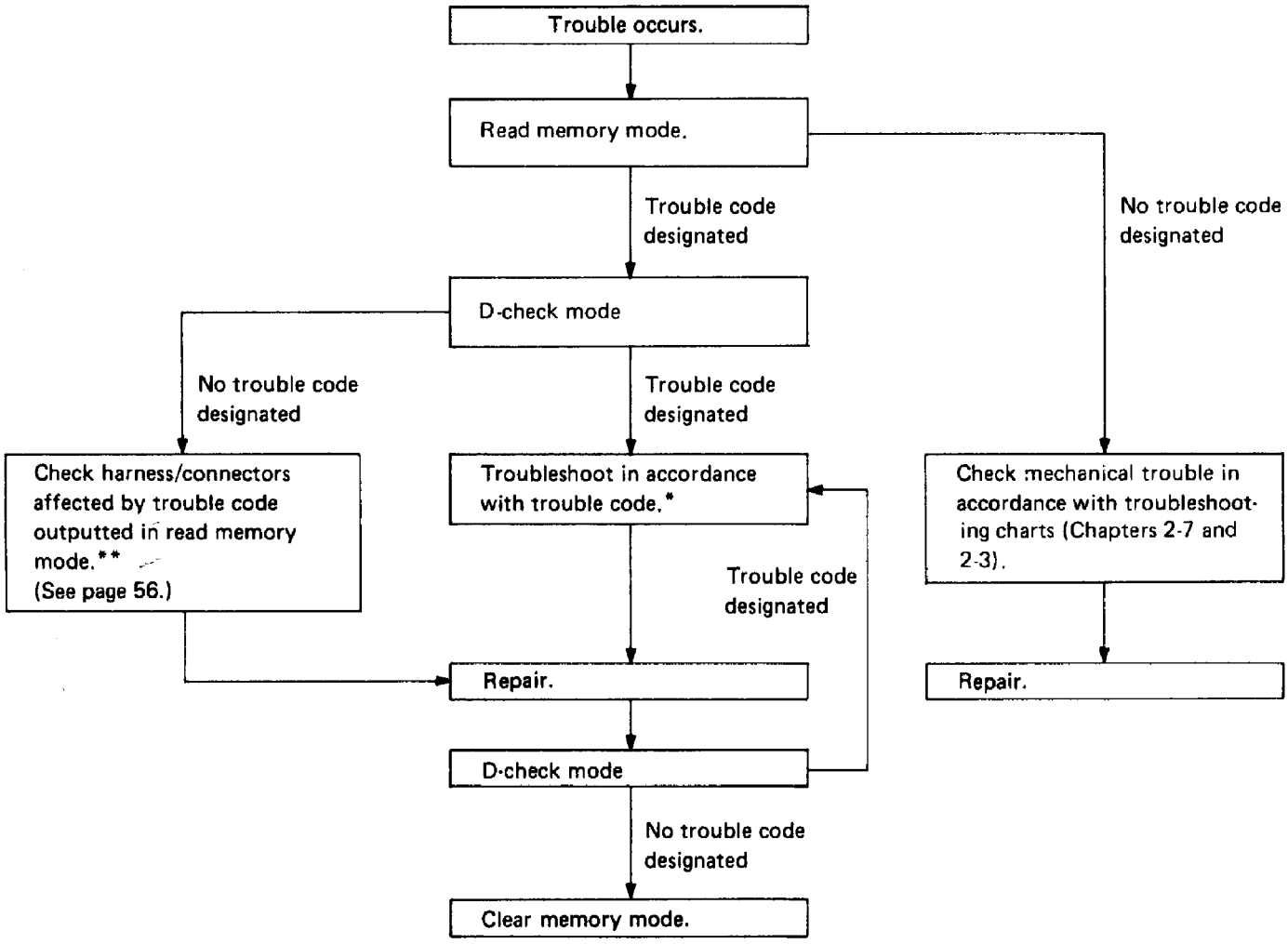

*: When more than one trouble code is outputted, begin troubleshooting with the smallest trouble code number and proceed to the next higher code.
After correcting each problem, conduct the D-check and ensure that the corresponding trouble code no longer appears.

**: When more than one trouble code is outputted, check all related harness connectors, starting with that corresponding to the smallest trouble code number and proceeding to the next higher code.

READ MEMORY MODE

WHEN VEHICLE IS RETURNED TO DEALER BECAUSE ECS LAMP LIGHTS

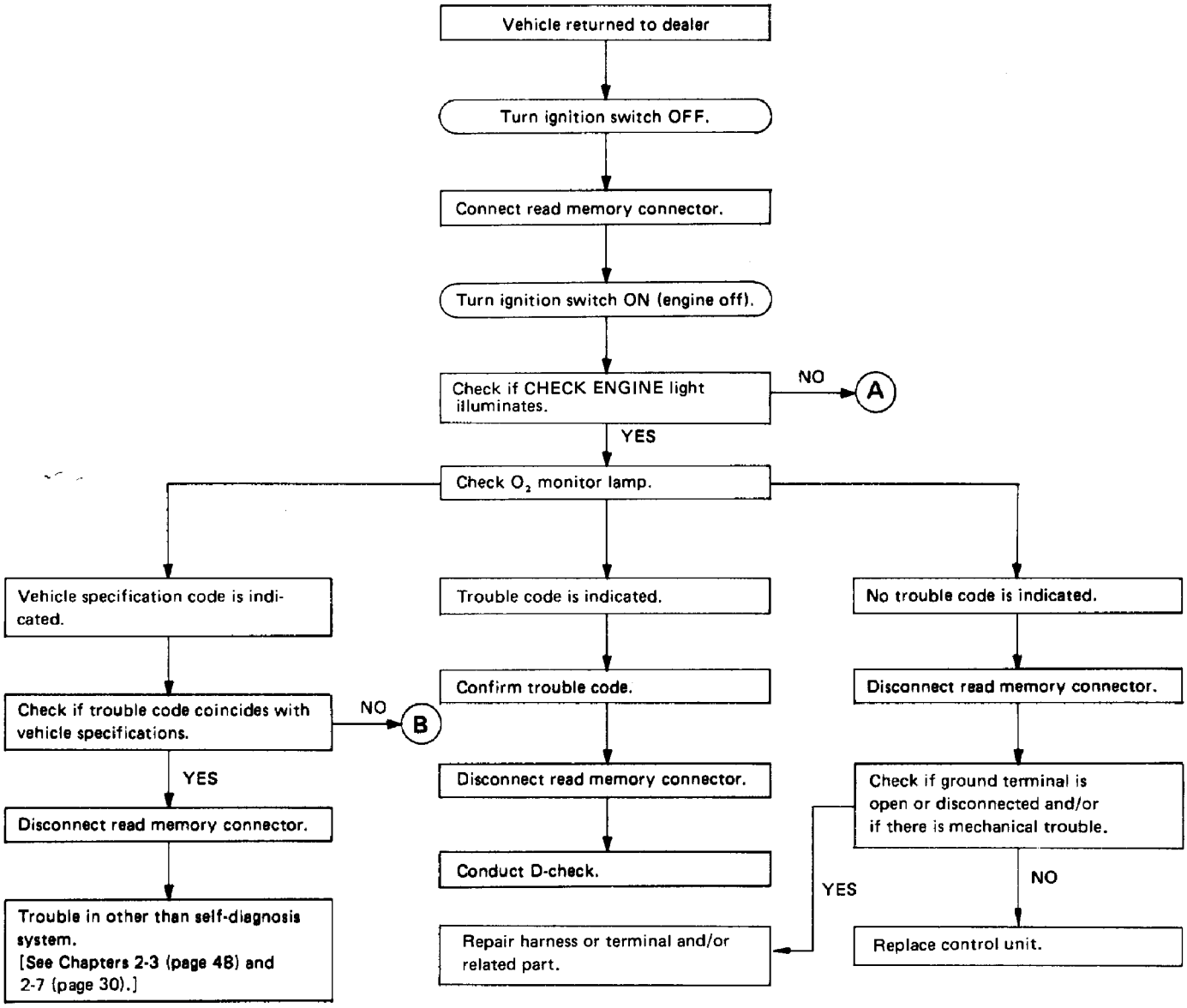

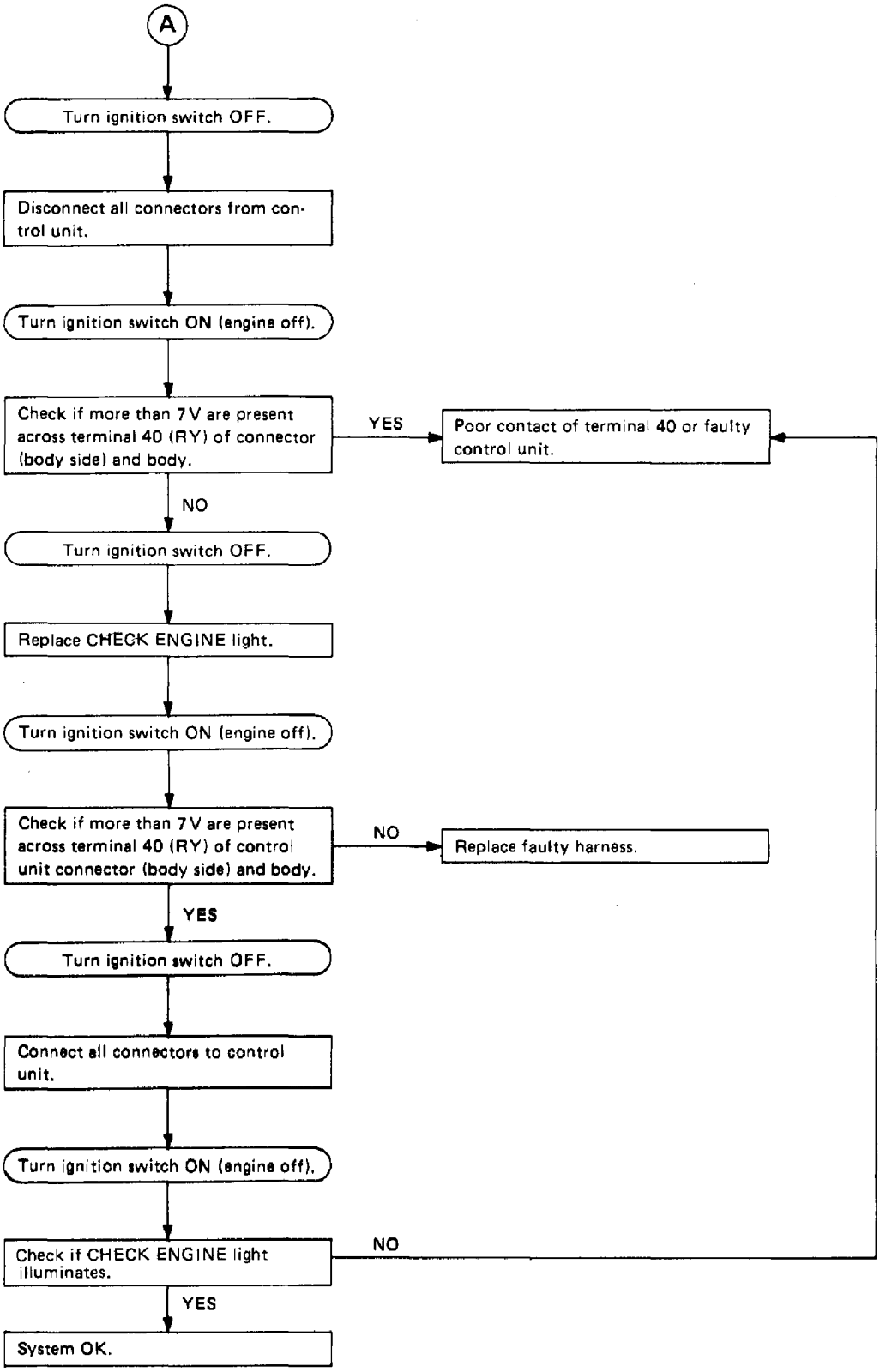
A
Turn ignition switch OFF.
Disconnect all connectors from control unit.
Turn ignition switch ON (engine off).
Check if more than 7 V are present across terminal 40 (RY) of connector (body side) and body.
YES
Poor contact of terminal 40 or faulty control unit.
NO
Turn ignition switch OFF.
Replace CHECK ENGINE light.
Turn ignition switch ON (engine off).
Check if more than 7 V are present across terminal 40 (RY) of control unit connector (body side) and body.
NO
Replace faulty harness.
YES
Turn ignition switch OFF.
Connect all connectors to control unit.
Turn ignition switch ON (engine off).
Check if CHECK ENGINE light illuminates.
NO
YES
System OK.

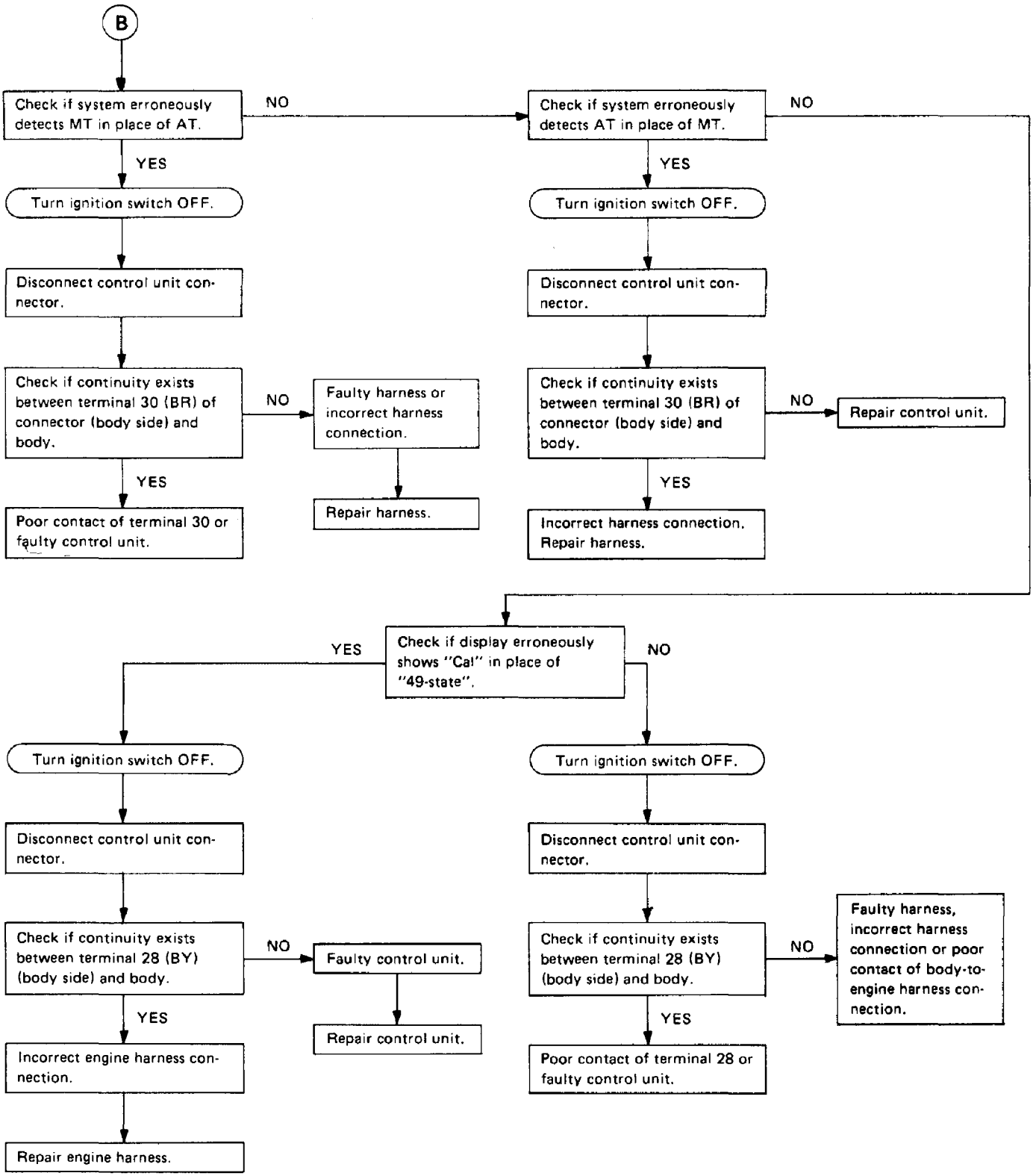
B
Check if system erroneously detects MT in place of AT.
NO
Check if system erroneously detects AT in place of MT.
NO
YES
YES
Turn ignition switch OFF.
Turn ignition switch OFF.
Disconnect control unit connector.
Disconnect control unit connector.
Check if continuity exists between terminal 30 (BR) of connector (body side) and body.
NO
Faulty harness or incorrect harness connection.
Check if continuity exists between terminal 30 (BR) of connector (body side) and body.
NO
Repair control unit.
YES
Repair harness.
YES
Poor contact of terminal 30 or faulty control unit.
Incorrect harness connection. Repair harness.
YES
Check if display erroneously shows "Ca!" in place of "49-state".
NO
Turn ignition switch OFF.
Turn ignition switch OFF.
Disconnect control unit connector.
Disconnect control unit connector.
Check if continuity exists between terminal 28 (BY) (body side) and body.
NO
Faulty control unit.
Check if continuity exists between terminal 28 (BY) (body side) and body.
NO
Faulty harness, incorrect harness connection or poor contact of body-to-engine harness connection.
YES
Repair control unit.
YES
Incorrect engine harness connection.
Poor contact of terminal 28 or faulty control unit.
Repair engine harness.

D-CHECK MODE

35

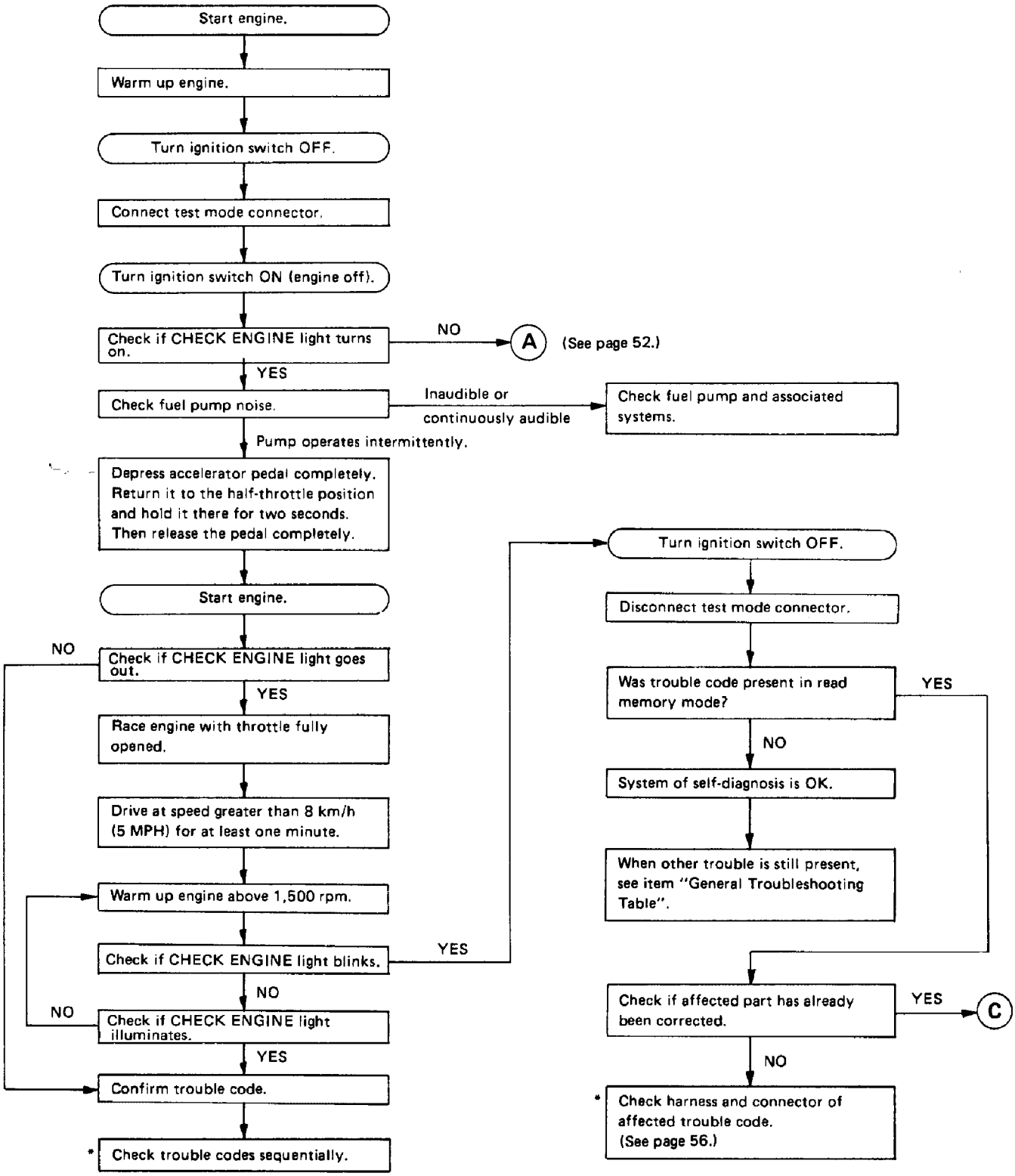

***: When more than one trouble code is outputted, sequentially check the trouble codes, starting with the smallest code number. After correcting each trouble, reconduct D-check and make sure the corresponding trouble code is no longer present. If another trouble code is outputted, carry out troubleshooting again.**

CLEAR MEMORY MODE

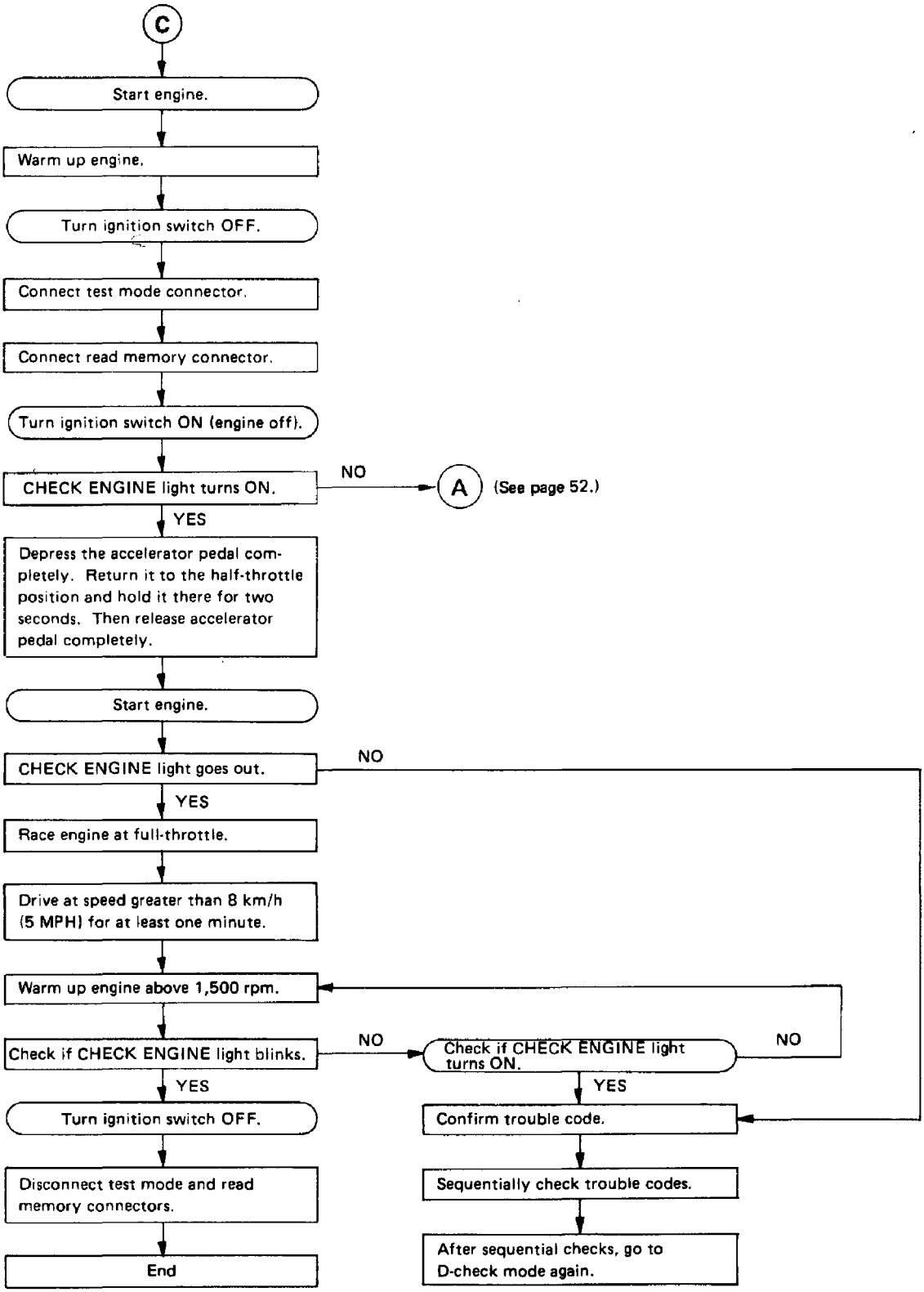

Checking Harnesses and Connectors Related to Trouble Codes

When a trouble code is outputted in the read memory mode but not in the D-check mode, check the affected harness and connector terminal as described below.

CHECKING TERMINALS OF CONTROL UNIT CONNECTOR (BODY SIDE)

1) When terminals are not locked securely, insert into connectors until they lock.

2) When terminals are considered to be open:
   (1) Method of determining "OK" or "Faulty":
   a. Pull out the terminal from the connector (body side).
   b. Insert this terminal (female) into the terminal (male) of the connector (control unit).
   c. Check "pull" force required to disconnect the female terminal from the male terminal.
   If the terminal is loose, it is "faulty".
   (2) When terminals are faulty:
   Pinch the terminal using a pair of nose pliers. If the terminal is still loose, replace it or the harness ASSY.

SYMPTOMS RESULTING FROM POOR CONTACT OF CONTROL UNIT CONNECTOR TERMINALS AND RELATED TROUBLE CODES

Terminal No.	Lead color	Trouble code	Symptom resulting from poor terminal contact
1	YR	–	No change occurs.
2	W	23	Engine stalls during idle. It can be restarted. Problems do not occur while driving.
3	GL	35	No change occurs.
4	YL or GY	–	No change occurs.
5	B	–	Engine runs at low speed and sometimes stalls during idle. It can be started but idle speed is low.
6	LB	–	Engine stalls during idle. It cannot be restarted if affected circuit remains opened. Engine lacks power while driving.
7	R	11	Engine stalls during idle. Shock is felt. Engine lacks power (poor acceleration) while driving.
8	*B **G	*11 **13	Engine stalls during idle. Shock is felt. Engine lacks power while driving.
9	WB	21	Slight shock is felt while engine is cold but is not felt after warm-up. Driving performance is affected while engine is cold but is not affected after warm-up.
10	BR	–	No change occurs.
11	–	–	———————
12	*W **R	23	Engine stalls during idle. It can be restarted. Problems do not occur while driving.
13	–	–	–
14	YW	–	No change occurs.
15	GY	–	No change occurs.
16	BR	–	No change occurs.

*: 1800 cc model only
**: 2700 cc model only

Terminal No.	Lead color	Trouble code	Symptom resulting from poor terminal contact
17	W	*13 **11	Engine stalls during idle. Shock is felt. Engine power while driving.
18	–	–	–
19	BW	–	Engine stalls during idle. It cannot be restarted. Shock is felt if poor intermittent contact occurs while driving.
20	BR	–	No change occurs.
21	W	31	Shock is not felt. Engine acceleration is poor.
22	B	31	Shock is not felt. Engine acceleration is poor.
23	L	–	No change occurs.
24	BW (MT) BY (AT)	12	CHECK ENGINE light comes on and soon goes out when starting engine. There is no problem.
25	LW	–	No change occurs.
26	–	–	————
27	WR	–	No change occurs.
*28	BY	–	No change occurs.
29	YR	33	No change occurs.
30	BR	–	No change occurs.
**31	LB	–	No change occurs.
32	Br	–	No change occurs.
33	LgW	–	No change occurs.
34	–	–	————
35	WR	–	————
**36	R	22	Change rarely occurs. Engine sometimes knocks.
37	WY	–	No change occurs.
38	LgR	–	No change occurs.
39	GW	–	No change occurs.
40	RY	–	No change occurs.
41	–	–	————
42	RB	–	No change occurs.
43	WY	–	No change occurs.
44	RL	–	No change occurs.

*: 1800 cc model only
**: 2700 cc model only

Terminal No.	Lead color	Trouble code	Symptom resulting from poor terminal contact
45	GB	–	No change occurs.
46	L	–	No change occurs.
47	R	–	No change occurs.
48	W	–	No change occurs.
49	W	*14 **25	Engine stalls during idle. It cannot be restarted if there is poor contact of affected connection. Shock is felt if poor intermittent contact occurs while driving.
50	W	*14 **25	Engine stalls during idle. It cannot be restarted if there is poor contact of affected connection. Shock is felt if poor intermittent contact occurs while driving.
51	*WL **WR	*15 **14	Engine stalls during idle. It cannot be restarted if there is poor contact of affected connection. Shock is felt if poor intermittent contact occurs while driving.
52	*WL **WR	*15 **14	Engine stalls during idle. It cannot be restarted if there is poor contact of affected connection. Shock is felt if poor intermittent contact occurs while driving.
**53	WY	15	Engine stalls during idle. It cannot be restarted if there is poor contact of affected connection. Shock is felt if poor intermittent contact occurs while driving.
**54	WY	15	Engine stalls during idle. If cannot be restarted if there is poor contact of affected connection. Shock is felt if poor intermittent contact occurs while driving.
55	W	–	Engine stalls during idle. It cannot be restarted if there is poor contact of affected connection. Shock is felt if poor intermittent contact occurs while driving.
56	B	–	No change occurs.
57	B	–	No change occurs.
**58	YR	24	No change occurs.
**59	YL	24	Engine stalls occasionally.
60	BR	–	No change occurs.
61	BR	–	No change occurs.
62	R	–	No change occurs.
**63	Br	–	Difficulty in engine starting while engine is cold.

*: 1800 cc model only
**: 2700 cc model only

Troubleshooting for Engine Starting Failure

1. GROUND & CONTROL UNIT POWER SUPPLY

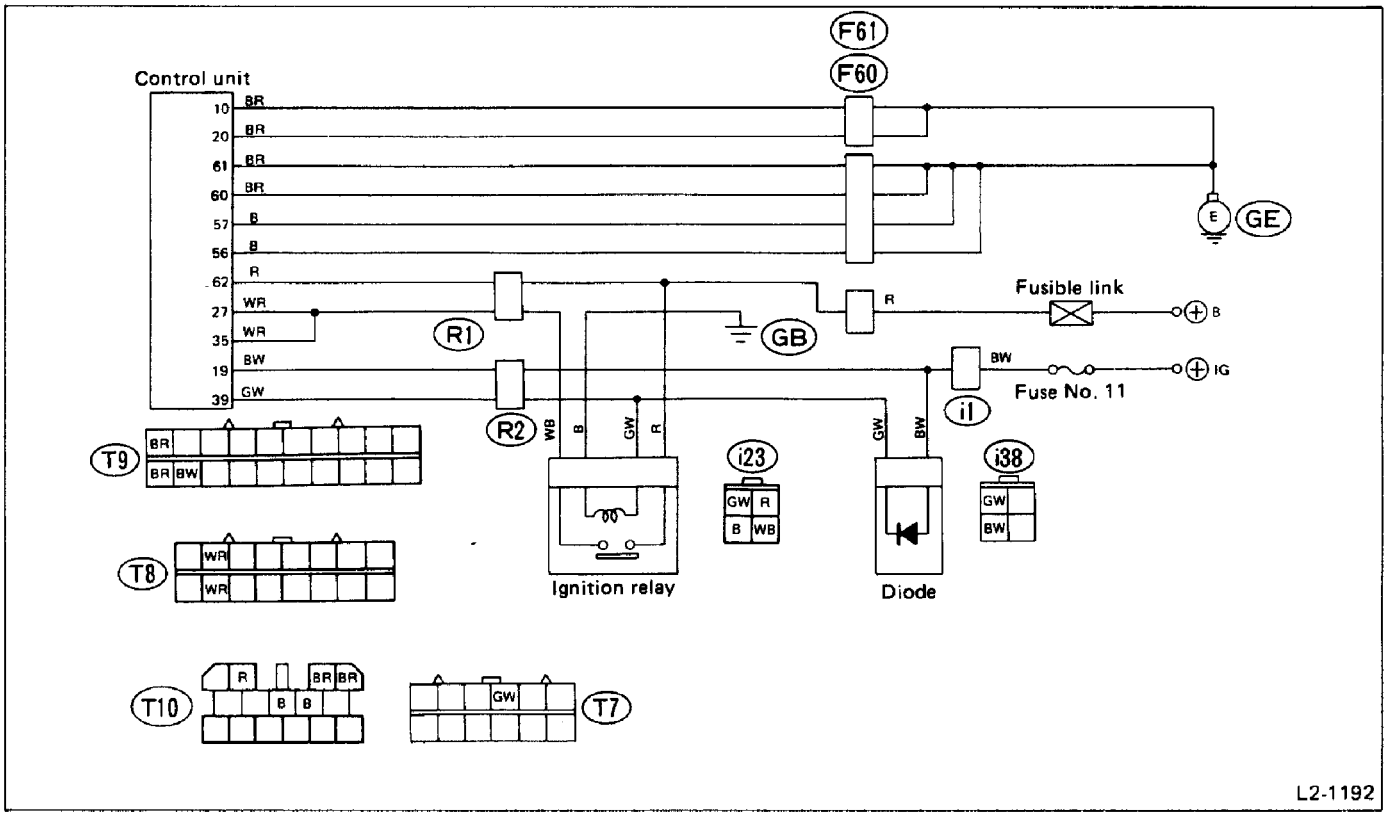

Fig. 75

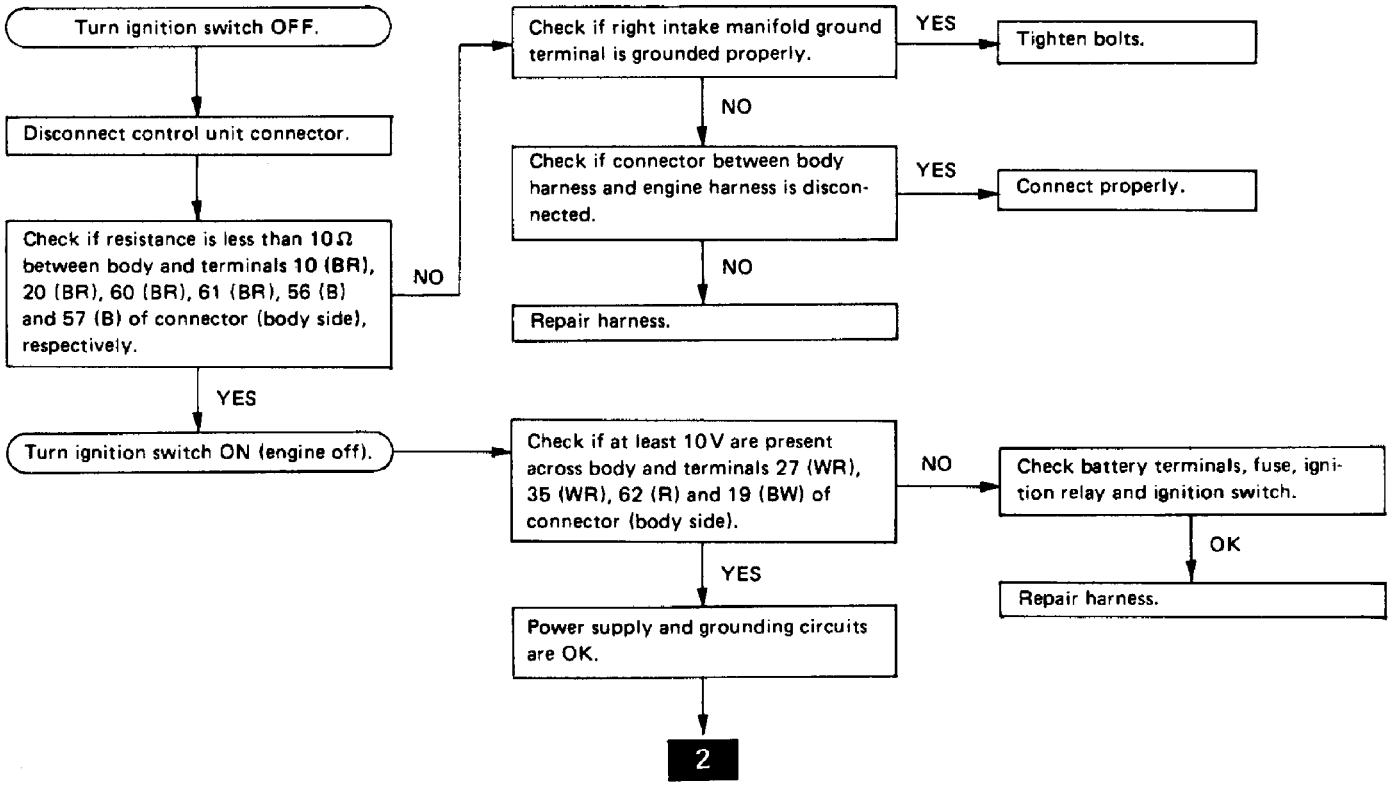

2. IGNITION CONTROL SYSTEM

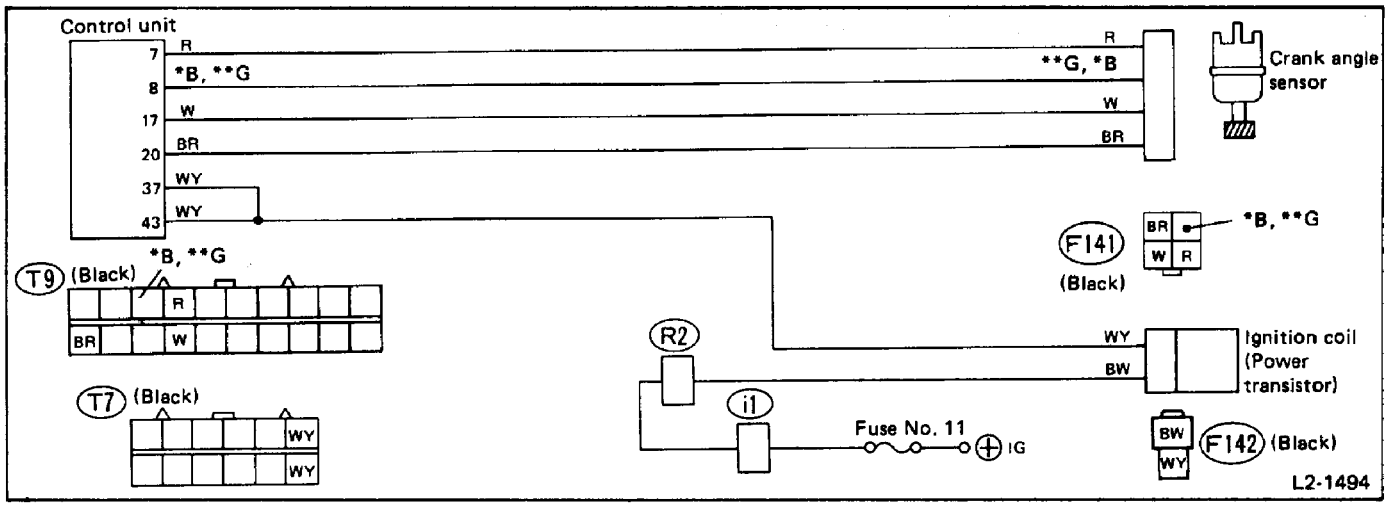

Fig. 76

*: 1800 cc model **: 2700 cc model

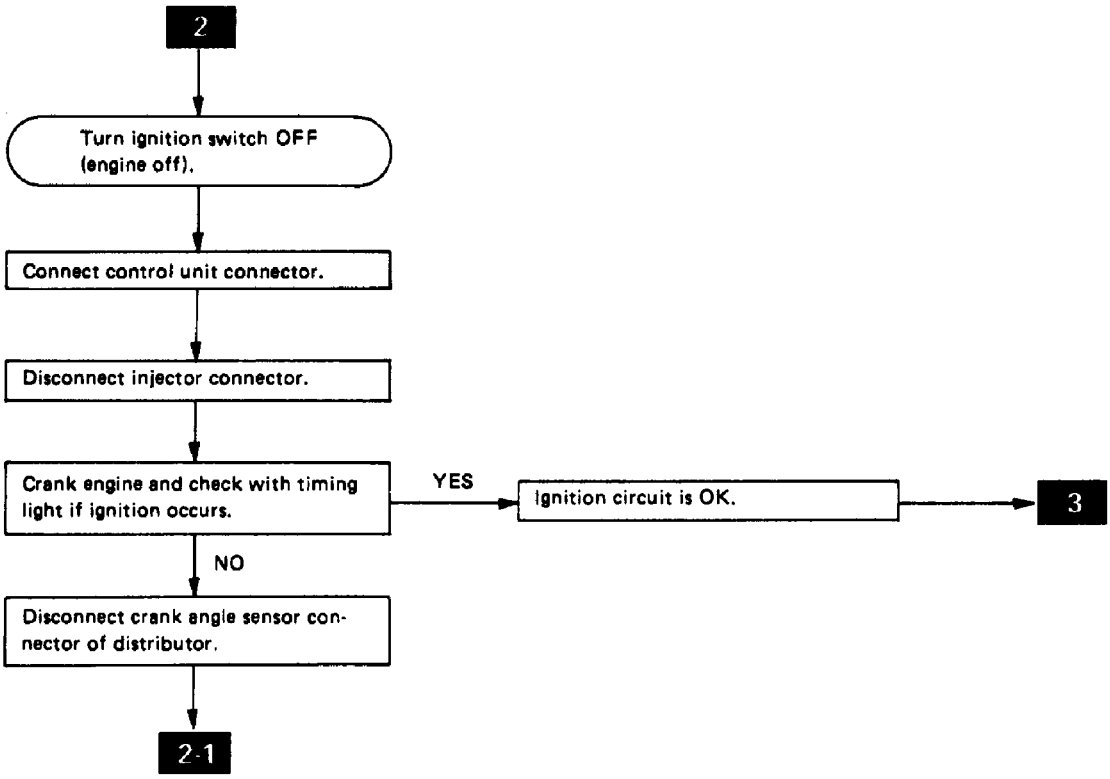

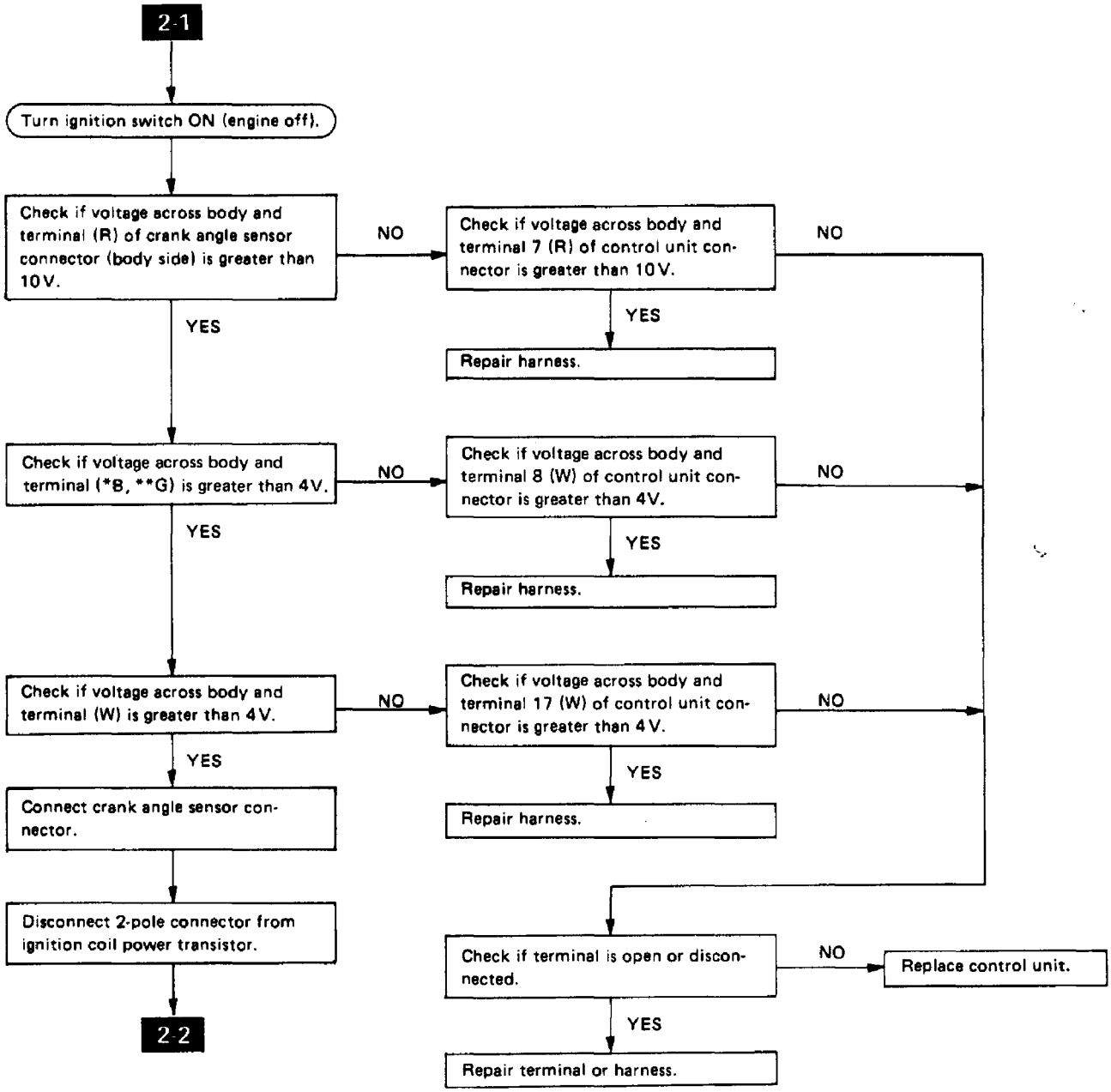

*: 1800 cc model **: 2700 cc model

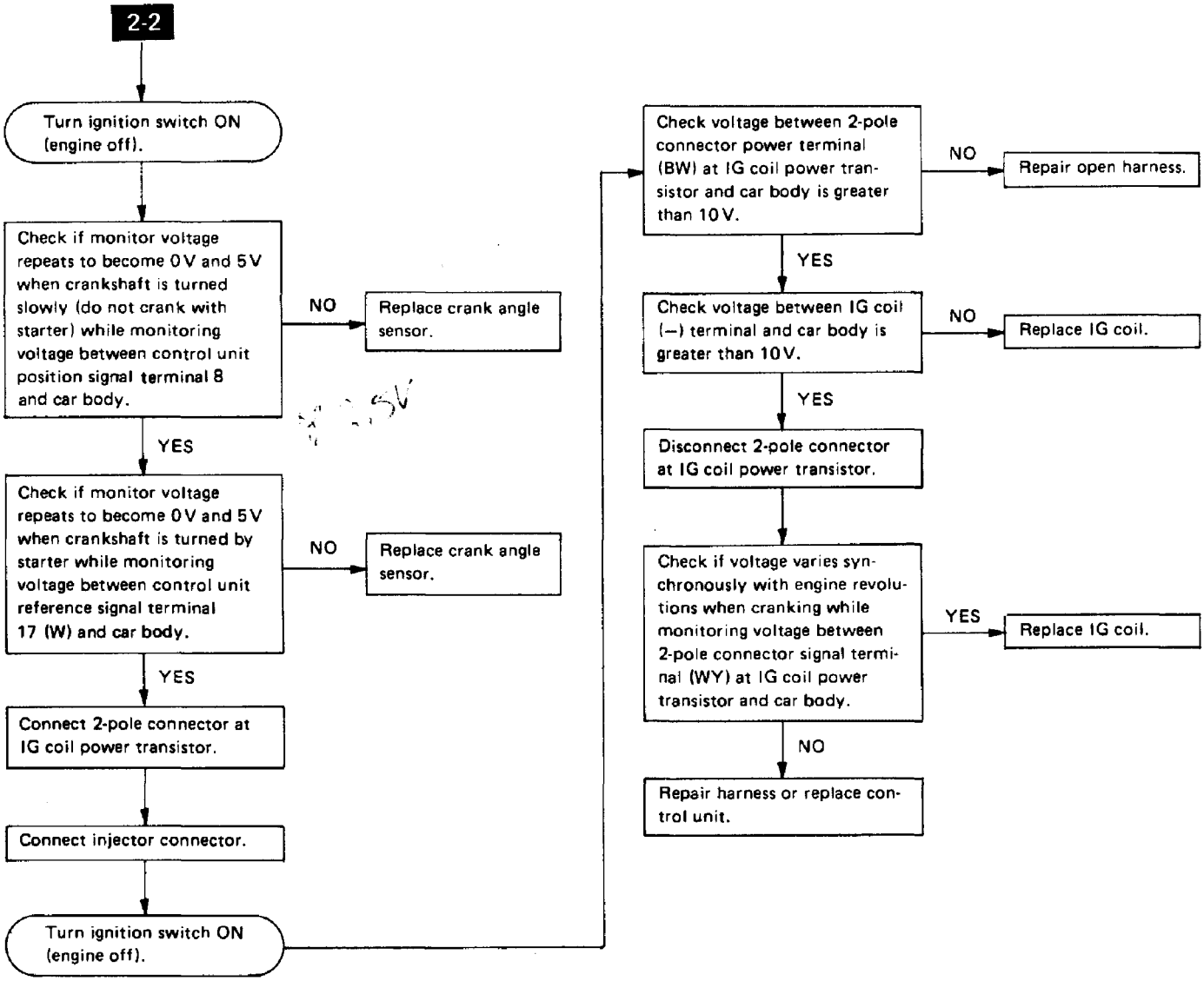
2-2
Turn ignition switch ON (engine off).
Check if monitor voltage repeats to become 0V and 5V when crankshaft is turned slowly (do not crank with starter) while monitoring voltage between control unit position signal terminal 8 and car body.
NO
Replace crank angle sensor.
YES
Check if monitor voltage repeats to become 0V and 5V when crankshaft is turned by starter while monitoring voltage between control unit reference signal terminal 17 (W) and car body.
NO
Replace crank angle sensor.
YES
Connect 2-pole connector at IG coil power transistor.
Connect injector connector.
Turn ignition switch ON (engine off).
Check voltage between 2-pole connector power terminal (BW) at IG coil power transistor and car body is greater than 10V.
NO
Repair open harness.
YES
Check voltage between IG coil (–) terminal and car body is greater than 10V.
NO
Replace IG coil.
YES
Disconnect 2-pole connector at IG coil power transistor.
Check if voltage varies synchronously with engine revolutions when cranking while monitoring voltage between 2-pole connector signal terminal (WY) at IG coil power transistor and car body.
YES
Replace IG coil.
NO
Repair harness or replace control unit.

3. FUEL PUMP CIRCUIT

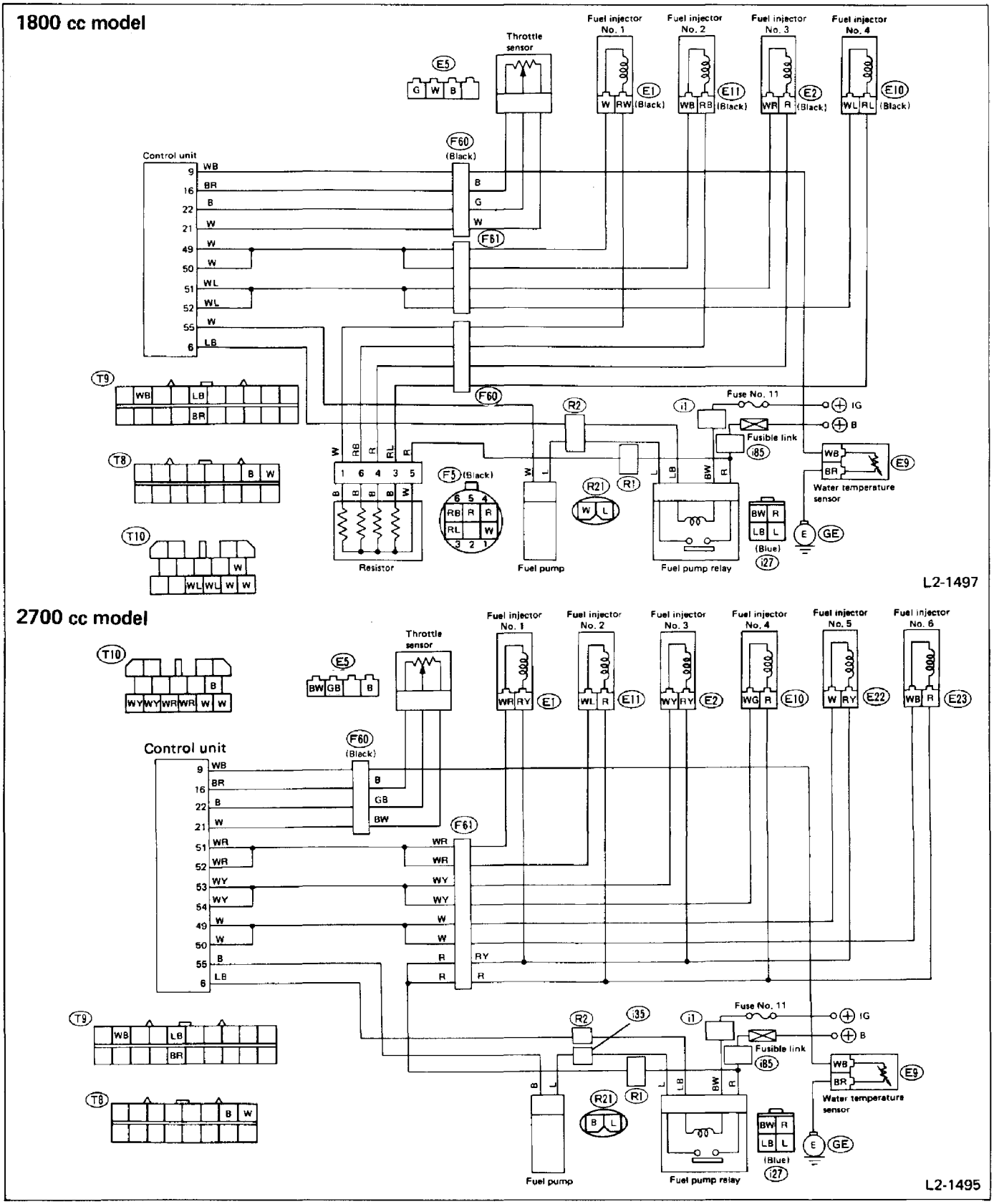

Fig. 77

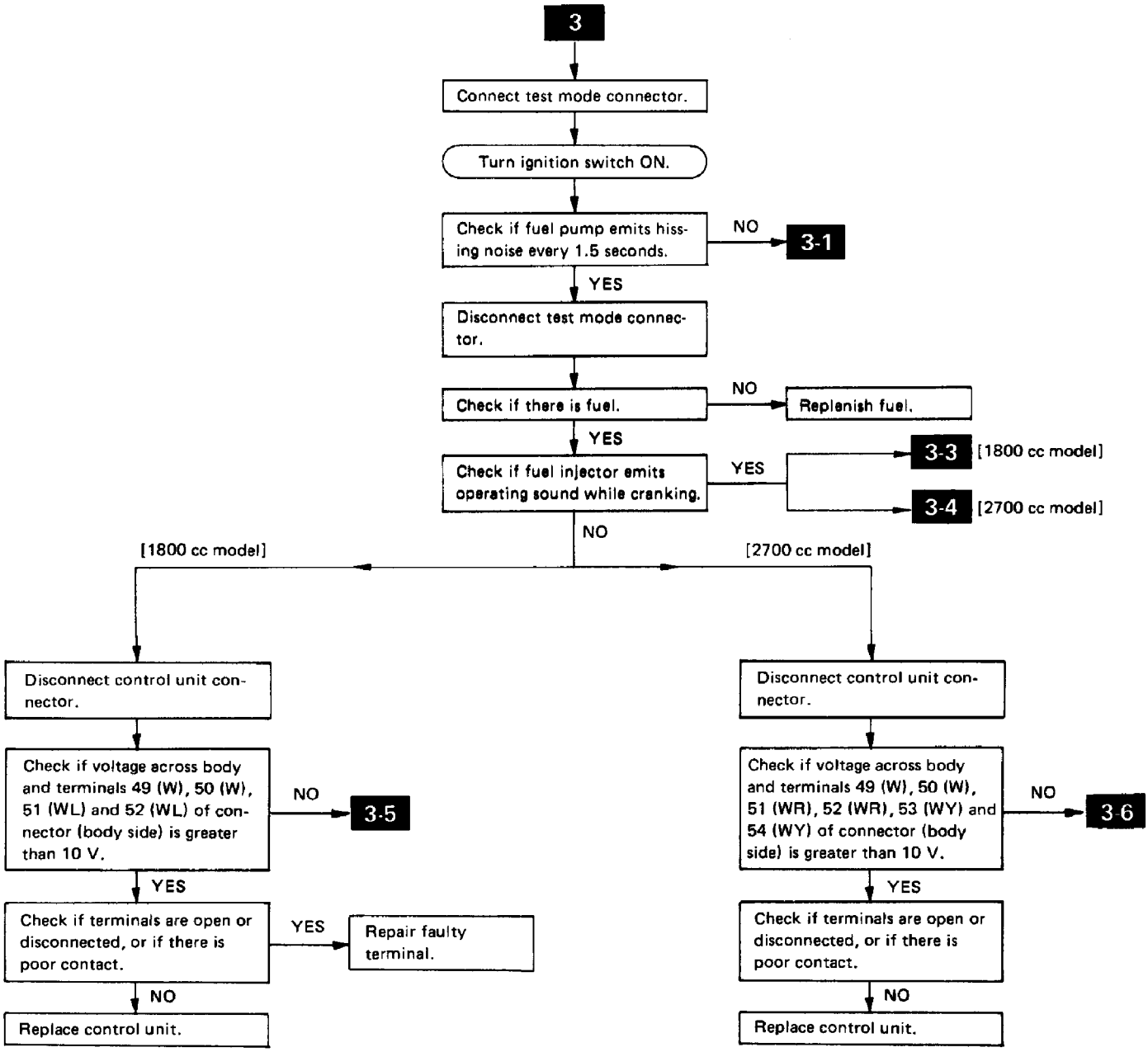
3
Connect test mode connector.
Turn ignition switch ON.
Check if fuel pump emits hissing noise every 1.5 seconds.
NO
3-1
YES
Disconnect test mode connector.
Check if there is fuel.
NO
Replenish fuel.
YES
Check if fuel injector emits operating sound while cranking.
YES
3-3 [1800 cc model]
3-4 [2700 cc model]
NO
[1800 cc model]
[2700 cc model]
Disconnect control unit connector.
Check if voltage across body and terminals 49 (W), 50 (W), 51 (WL) and 52 (WL) of connector (body side) is greater than 10 V.
NO
3-5
YES
Check if terminals are open or disconnected, or if there is poor contact.
YES
Repair faulty terminal.
NO
Replace control unit.
Disconnect control unit connector.
Check if voltage across body and terminals 49 (W), 50 (W), 51 (WR), 52 (WR), 53 (WY) and 54 (WY) of connector (body side) is greater than 10 V.
NO
3-6
YES
Check if terminals are open or disconnected, or if there is poor contact.
NO
Replace control unit.

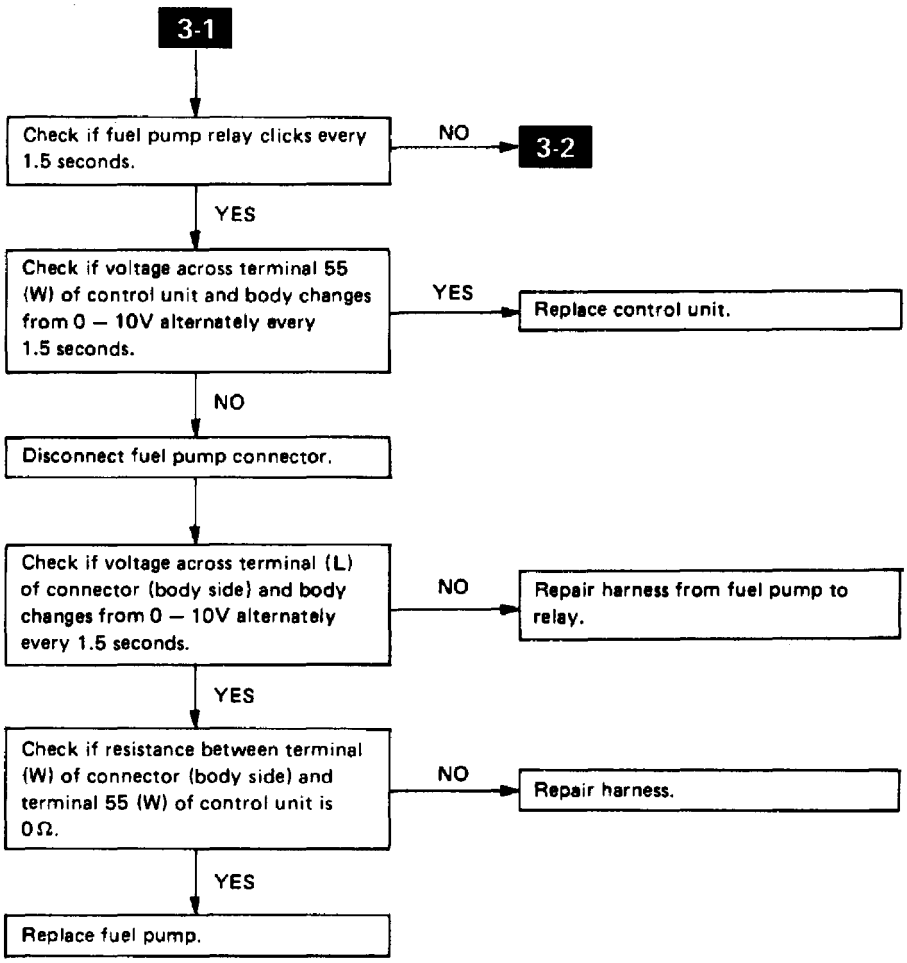
3-1
Check if fuel pump relay clicks every 1.5 seconds.
NO
3-2
YES
Check if voltage across terminal 55 (W) of control unit and body changes from 0 — 10V alternately every 1.5 seconds.
YES
Replace control unit.
NO
Disconnect fuel pump connector.
Check if voltage across terminal (L) of connector (body side) and body changes from 0 — 10V alternately every 1.5 seconds.
NO
Repair harness from fuel pump to relay.
YES
Check if resistance between terminal (W) of connector (body side) and terminal 55 (W) of control unit is 0Ω.
NO
Repair harness.
YES
Replace fuel pump.

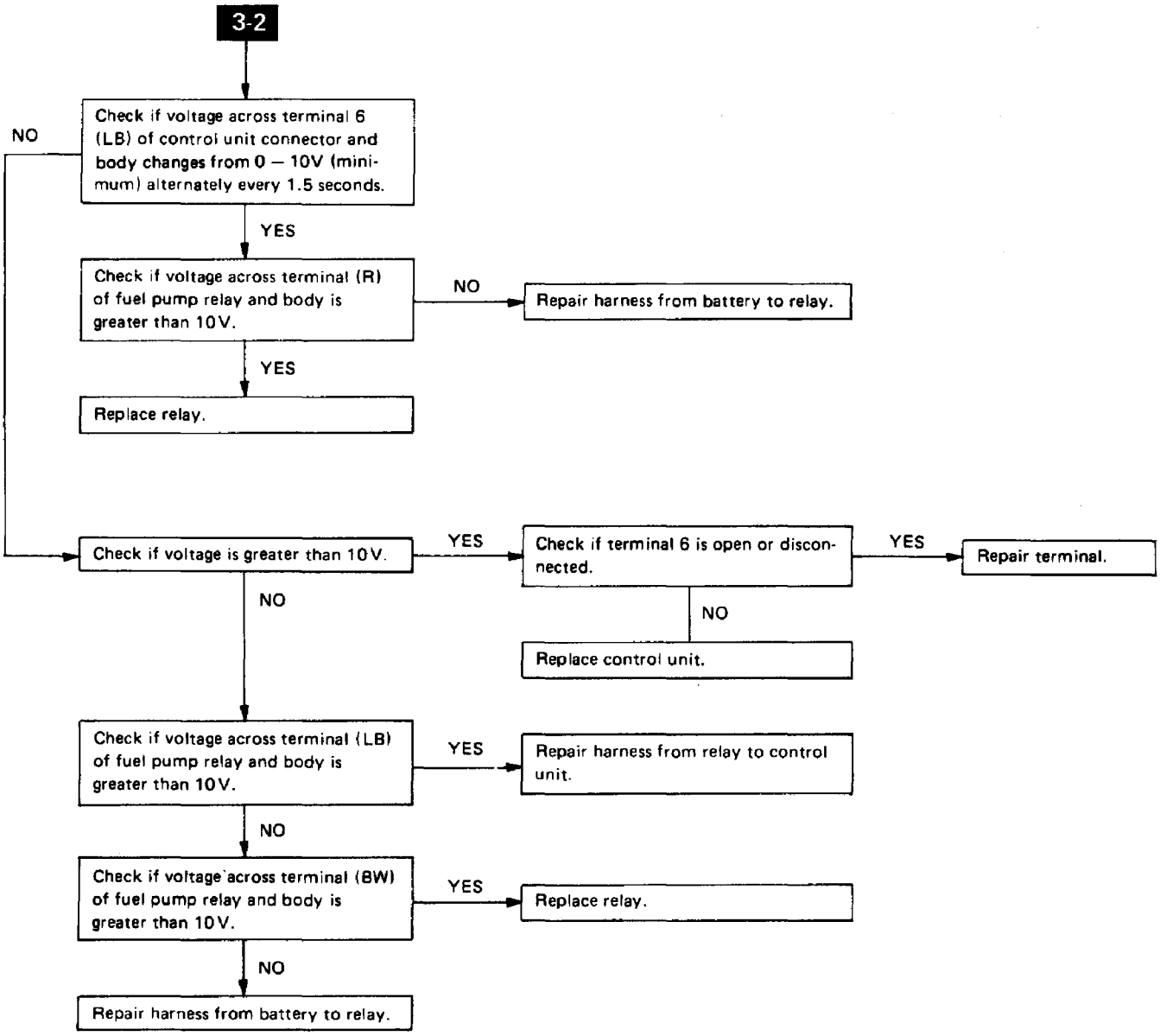
3-2
Check if voltage across terminal 6 (LB) of control unit connector and body changes from 0 — 10V (minimum) alternately every 1.5 seconds.
NO
YES
Check if voltage across terminal (R) of fuel pump relay and body is greater than 10V.
NO
Repair harness from battery to relay.
YES
Replace relay.
Check if voltage is greater than 10V.
YES
Check if terminal 6 is open or disconnected.
YES
Repair terminal.
NO
NO
Replace control unit.
Check if voltage across terminal (LB) of fuel pump relay and body is greater than 10V.
YES
Repair harness from relay to control unit.
NO
Check if voltage across terminal (BW) of fuel pump relay and body is greater than 10V.
YES
Replace relay.
NO
Repair harness from battery to relay.

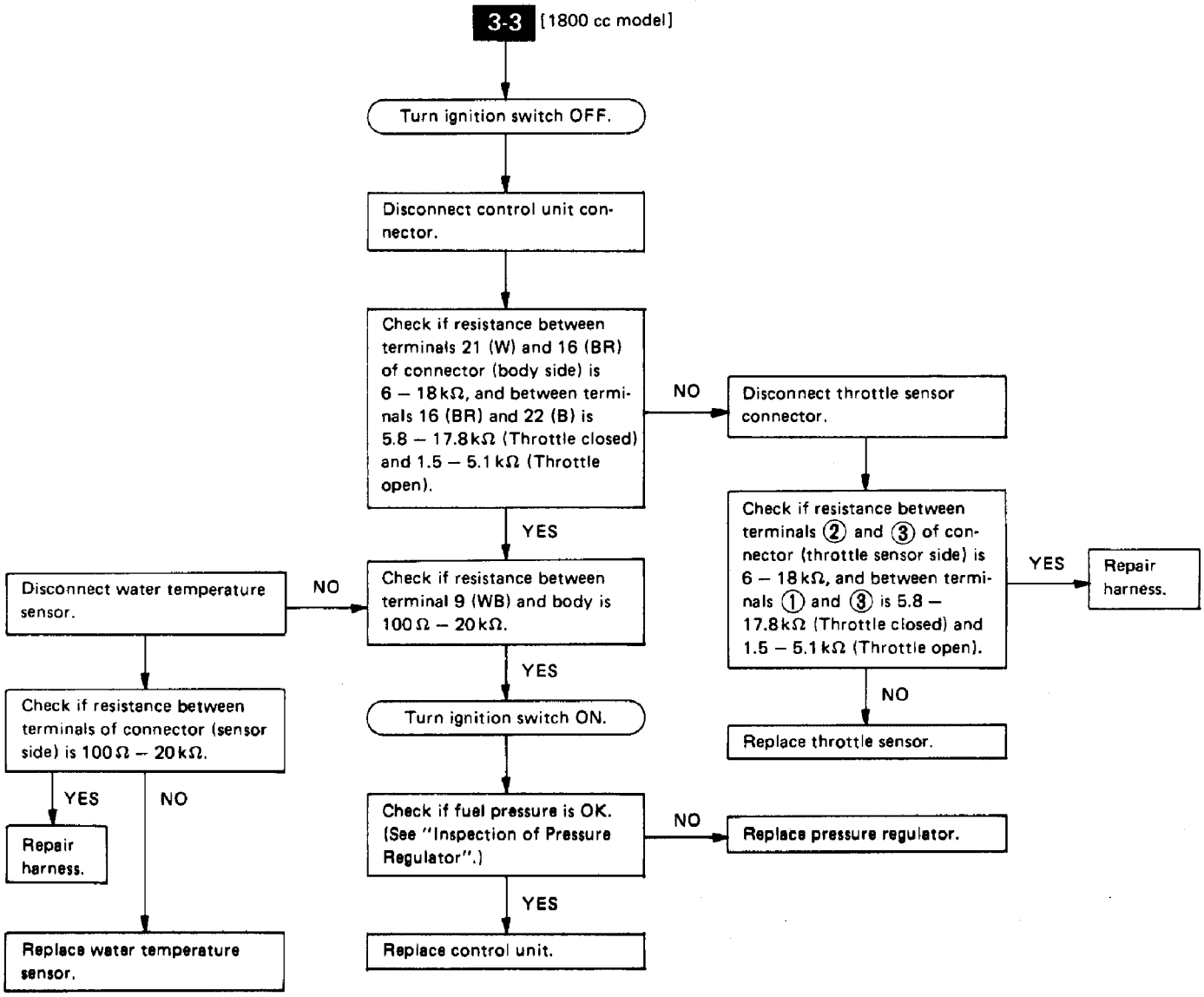
3-3 [1800 cc model]
Turn ignition switch OFF.
Disconnect control unit connector.
Check if resistance between terminals 21 (W) and 16 (BR) of connector (body side) is 6 – 18 kΩ, and between terminals 16 (BR) and 22 (B) is 5.8 – 17.8 kΩ (Throttle closed) and 1.5 – 5.1 kΩ (Throttle open).
NO
Disconnect throttle sensor connector.
Check if resistance between terminals ② and ③ of connector (throttle sensor side) is 6 – 18 kΩ, and between terminals ① and ③ is 5.8 – 17.8 kΩ (Throttle closed) and 1.5 – 5.1 kΩ (Throttle open).
YES
Repair harness.
NO
Replace throttle sensor.
YES
Disconnect water temperature sensor.
NO
Check if resistance between terminal 9 (WB) and body is 100 Ω – 20 kΩ.
YES
Check if resistance between terminals of connector (sensor side) is 100 Ω – 20 kΩ.
YES
Repair harness.
NO
Replace water temperature sensor.
Turn ignition switch ON.
Check if fuel pressure is OK. (See "Inspection of Pressure Regulator".)
NO
Replace pressure regulator.
YES
Replace control unit.

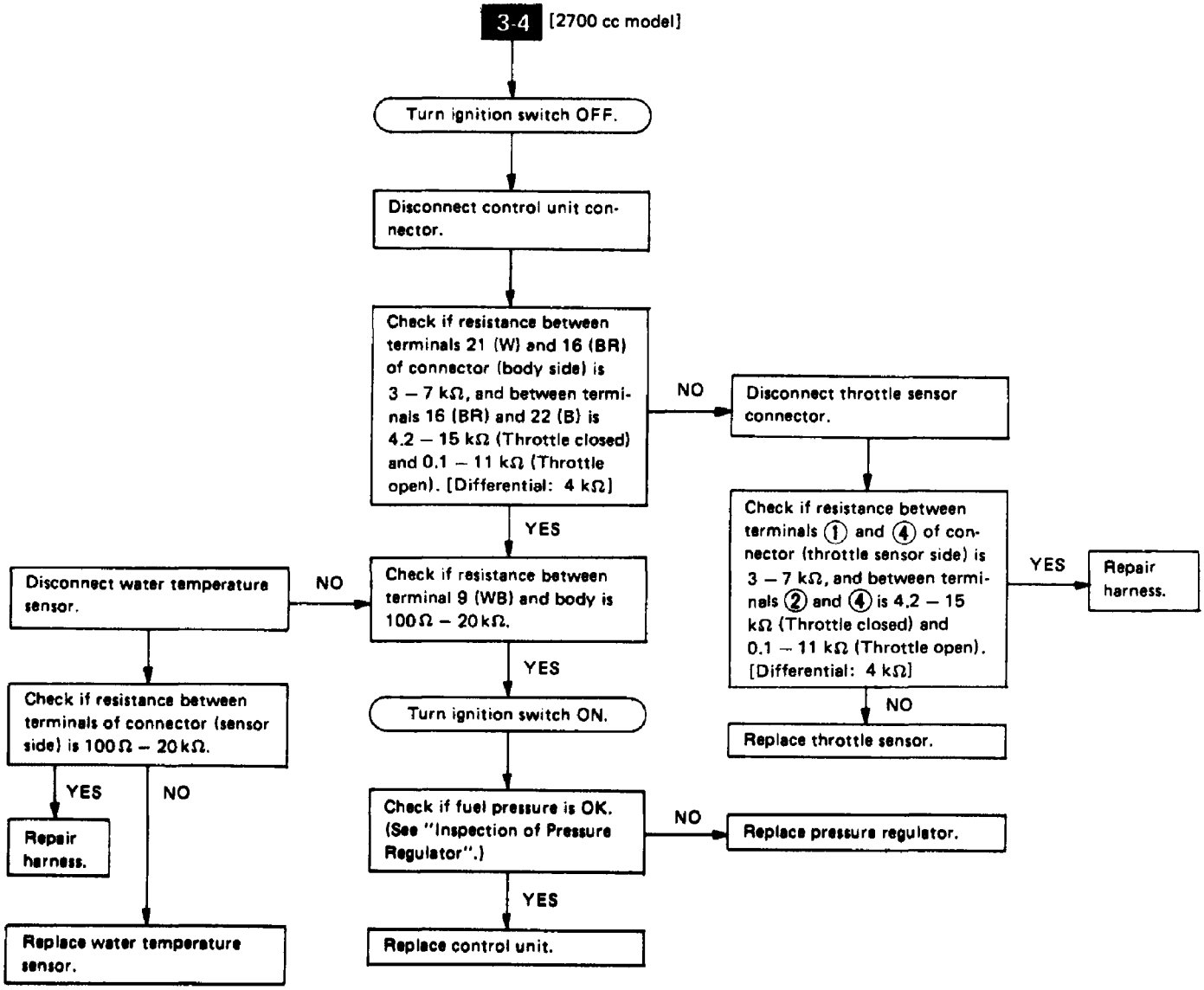
3-4 [2700 cc model]
Turn ignition switch OFF.
Disconnect control unit connector.
Check if resistance between terminals 21 (W) and 16 (BR) of connector (body side) is 3 – 7 kΩ, and between terminals 16 (BR) and 22 (B) is 4.2 – 15 kΩ (Throttle closed) and 0.1 – 11 kΩ (Throttle open). [Differential: 4 kΩ]
NO
Disconnect throttle sensor connector.
Check if resistance between terminals ① and ④ of connector (throttle sensor side) is 3 – 7 kΩ, and between terminals ② and ④ is 4.2 – 15 kΩ (Throttle closed) and 0.1 – 11 kΩ (Throttle open). [Differential: 4 kΩ]
YES
Repair harness.
NO
Replace throttle sensor.
YES
Disconnect water temperature sensor.
NO
Check if resistance between terminal 9 (WB) and body is 100Ω – 20kΩ.
YES
Turn ignition switch ON.
Check if resistance between terminals of connector (sensor side) is 100Ω – 20kΩ.
YES
Repair harness.
NO
Replace water temperature sensor.
Check if fuel pressure is OK. (See "Inspection of Pressure Regulator".)
NO
Replace pressure regulator.
YES
Replace control unit.

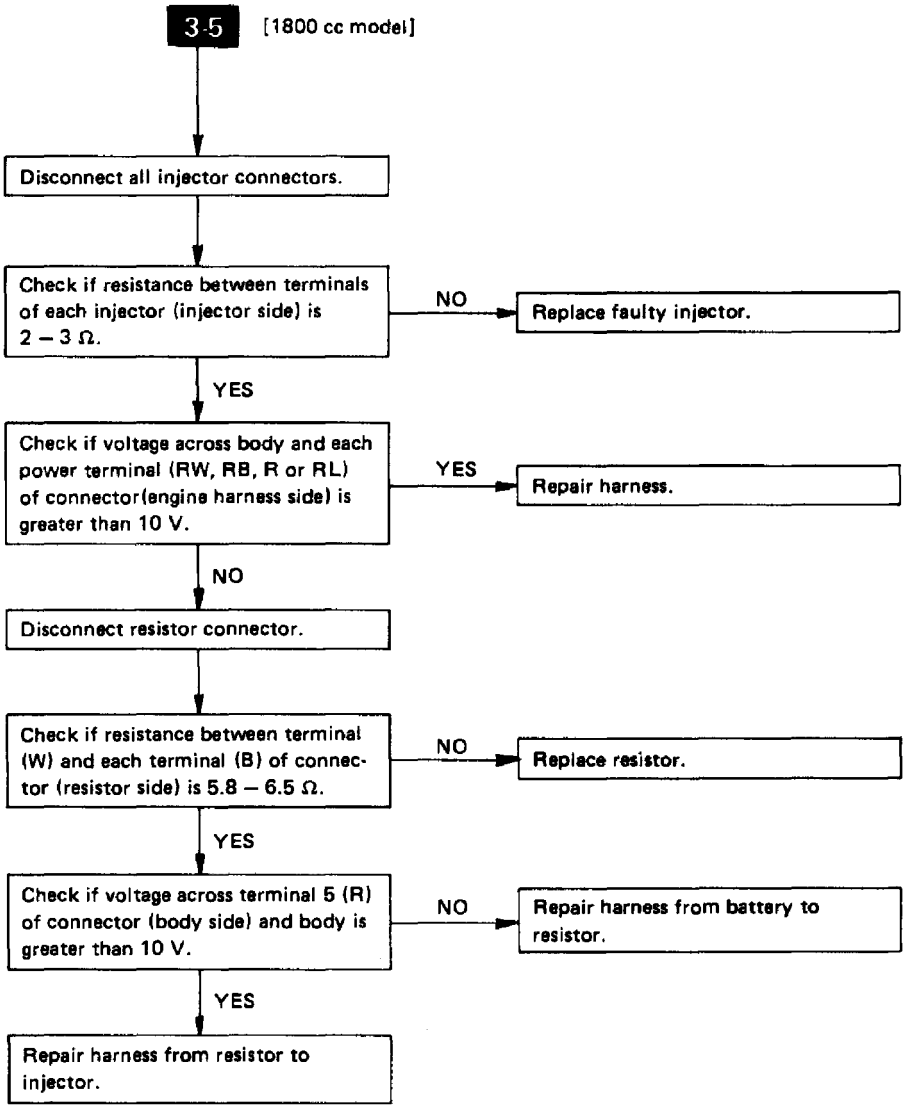
3-5
[1800 cc model]
Disconnect all injector connectors.
Check if resistance between terminals of each injector (injector side) is 2 – 3 Ω.
NO
Replace faulty injector.
YES
Check if voltage across body and each power terminal (RW, RB, R or RL) of connector(engine harness side) is greater than 10 V.
YES
Repair harness.
NO
Disconnect resistor connector.
Check if resistance between terminal (W) and each terminal (B) of connector (resistor side) is 5.8 – 6.5 Ω.
NO
Replace resistor.
YES
Check if voltage across terminal 5 (R) of connector (body side) and body is greater than 10 V.
NO
Repair harness from battery to resistor.
YES
Repair harness from resistor to injector.

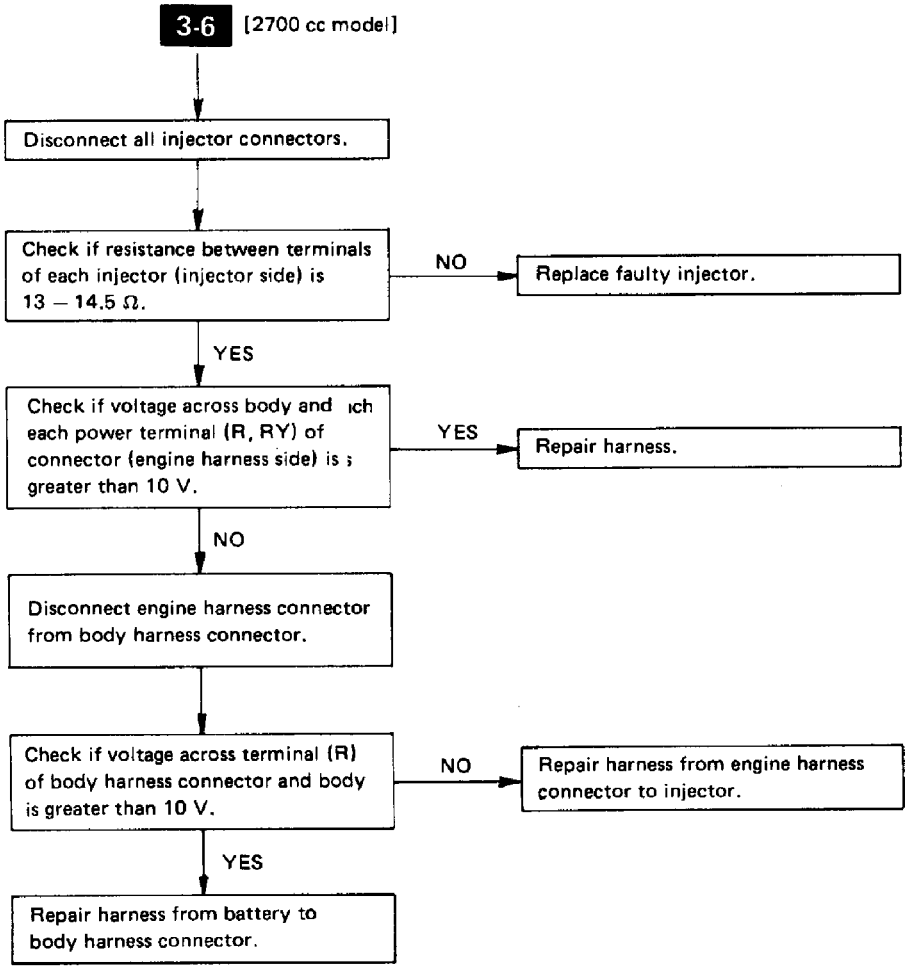
3-6 [2700 cc model]
Disconnect all injector connectors.
Check if resistance between terminals of each injector (injector side) is 13 – 14.5 Ω.
NO
Replace faulty injector.
YES
Check if voltage across body and ıch each power terminal (R, RY) of connector (engine harness side) is ; greater than 10 V.
YES
Repair harness.
NO
Disconnect engine harness connector from body harness connector.
Check if voltage across terminal (R) of body harness connector and body is greater than 10 V.
NO
Repair harness from engine harness connector to injector.
YES
Repair harness from battery to body harness connector.

TROUBLE CODE (11): CRANK ANGLE SENSOR

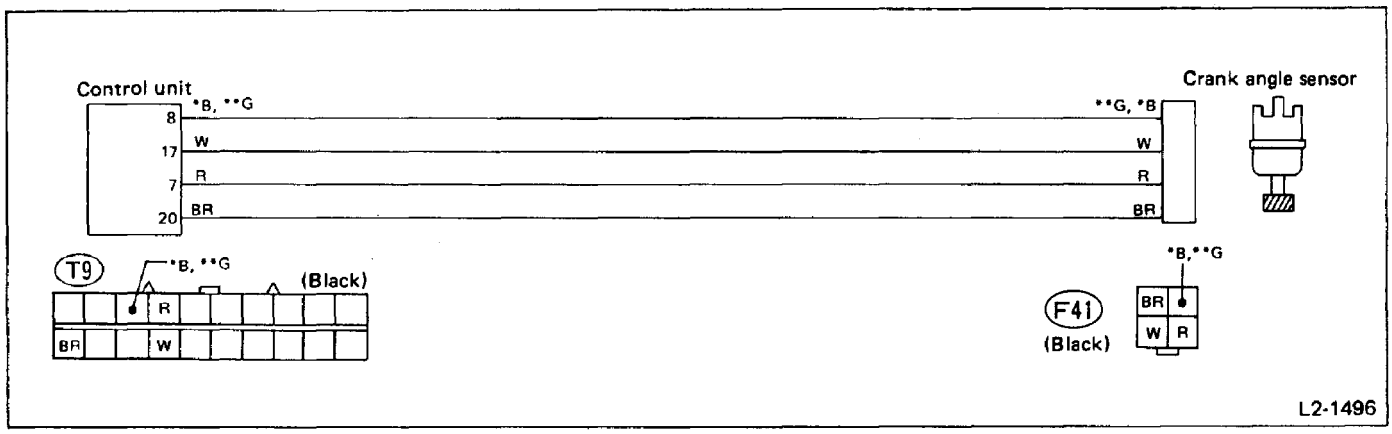

Fig. 78

*: 1800 cc model **: 2700 cc model

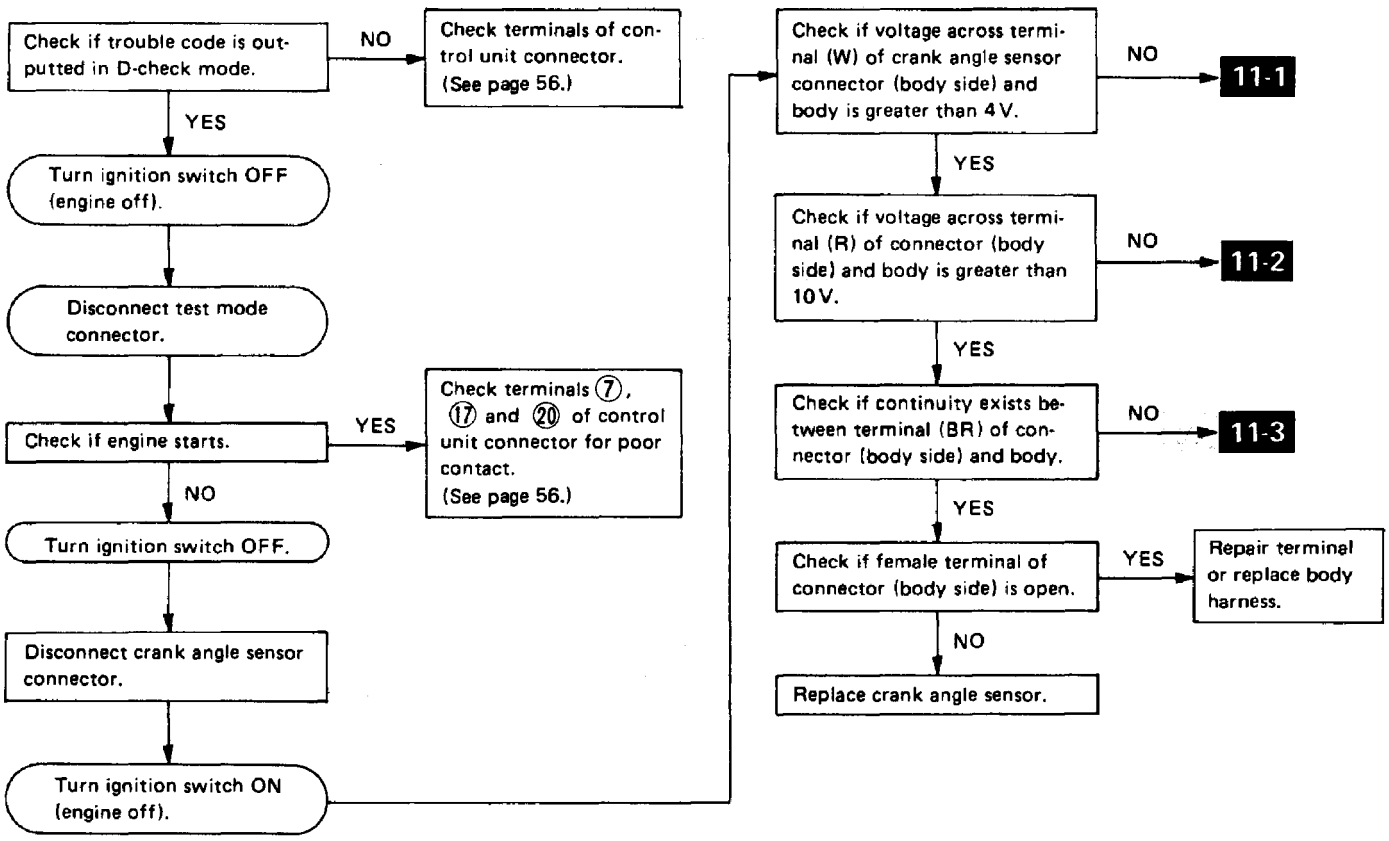

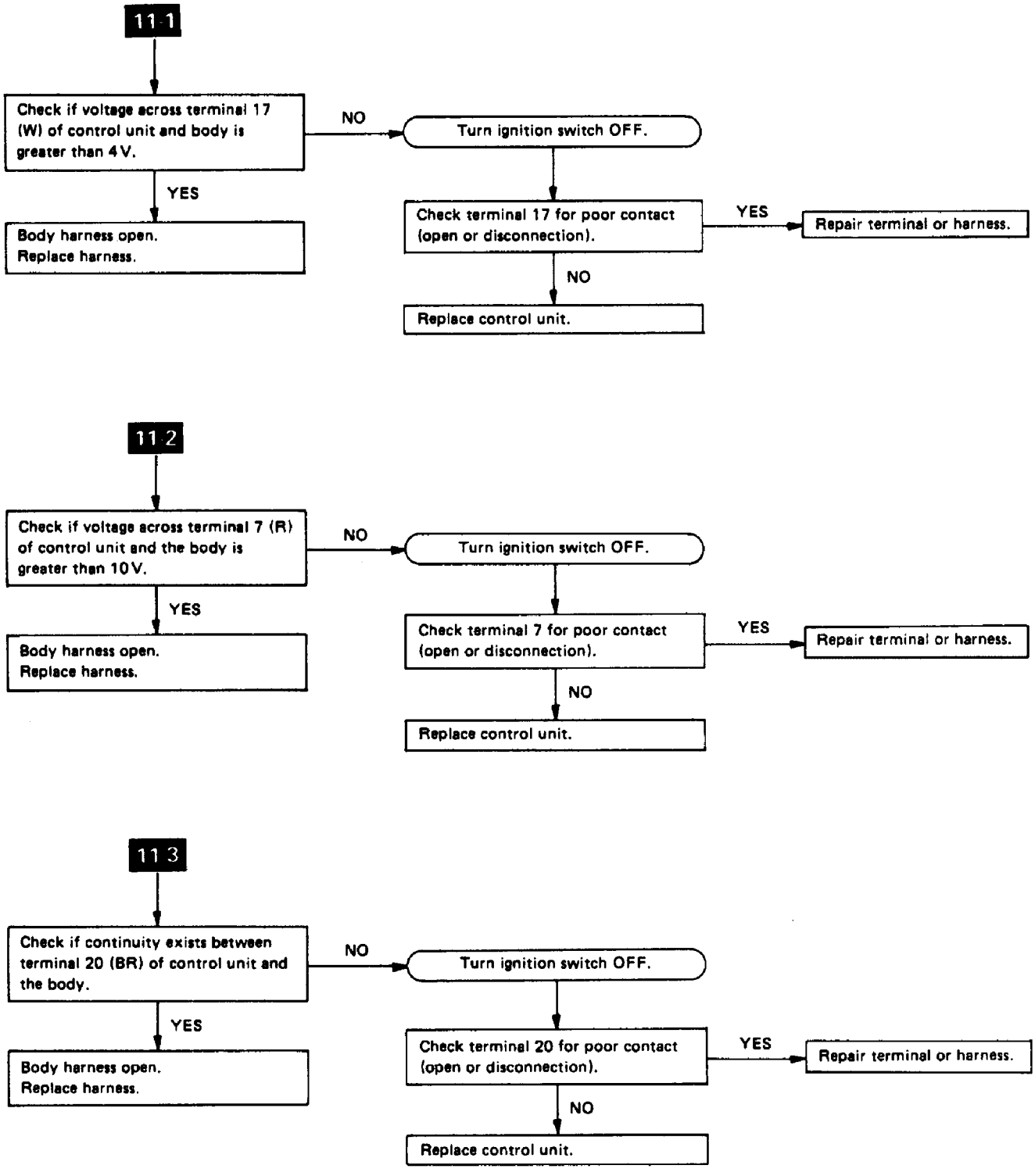
11-1
Check if voltage across terminal 17 (W) of control unit and body is greater than 4 V.
NO
Turn ignition switch OFF.
YES
Body harness open. Replace harness.
Check terminal 17 for poor contact (open or disconnection).
YES
Repair terminal or harness.
NO
Replace control unit.
11-2
Check if voltage across terminal 7 (R) of control unit and the body is greater than 10 V.
NO
Turn ignition switch OFF.
YES
Body harness open. Replace harness.
Check terminal 7 for poor contact (open or disconnection).
YES
Repair terminal or harness.
NO
Replace control unit.
11-3
Check if continuity exists between terminal 20 (BR) of control unit and the body.
NO
Turn ignition switch OFF.
YES
Body harness open. Replace harness.
Check terminal 20 for poor contact (open or disconnection).
YES
Repair terminal or harness.
NO
Replace control unit.

TROUBLE CODE (12): STARTER SWITCH

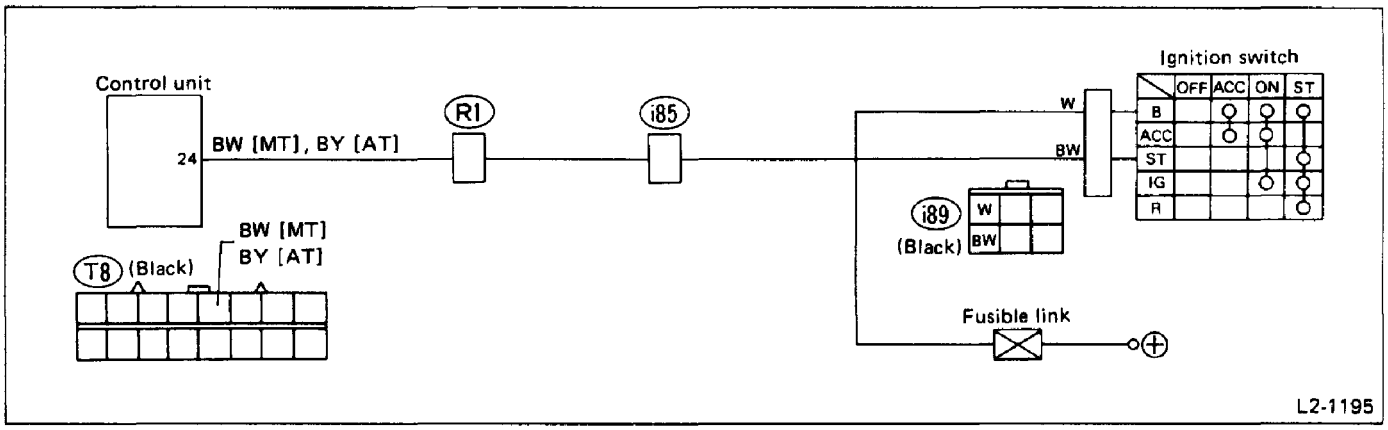

Fig. 79

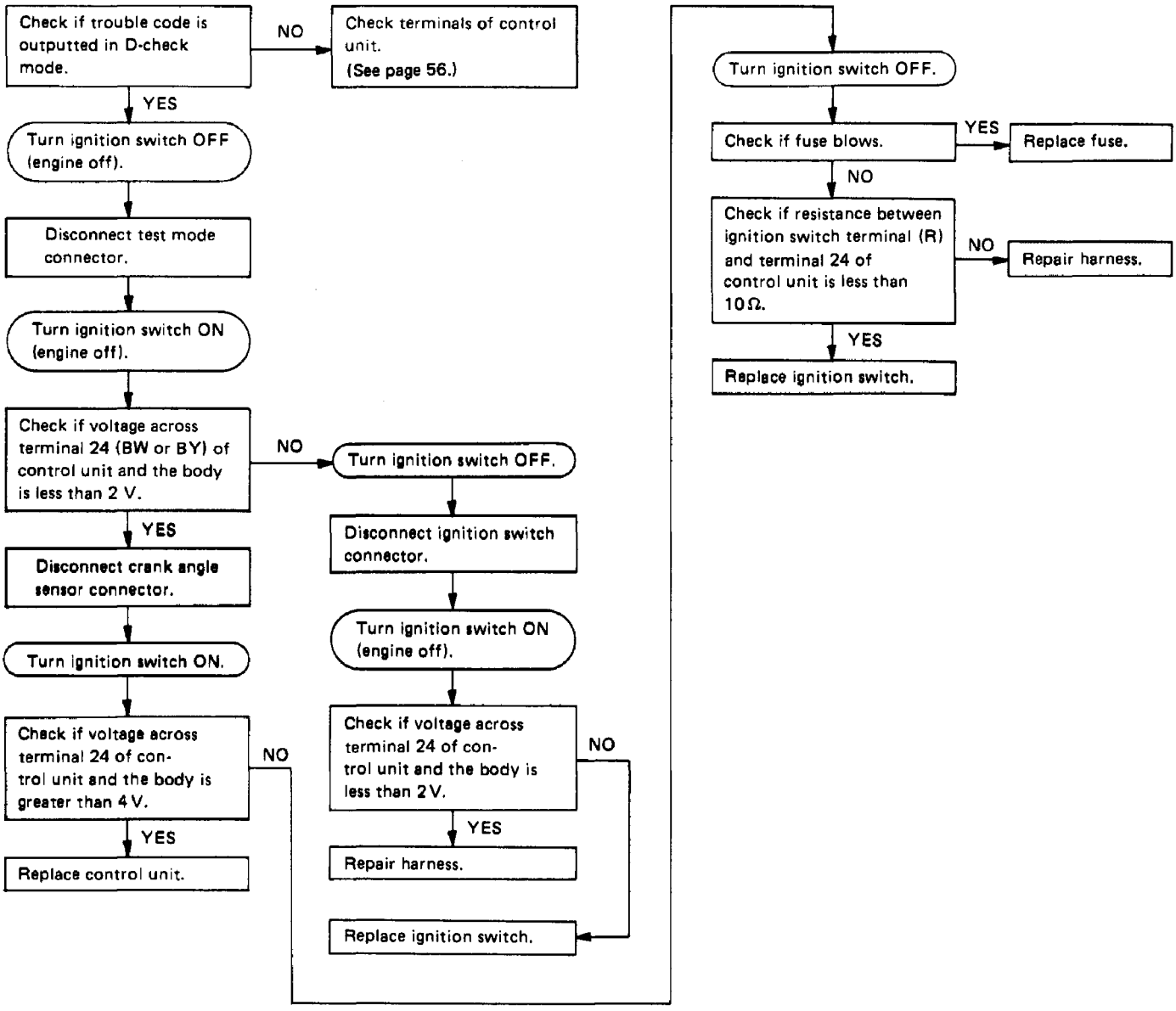

TROUBLE CODE (13): CRANK ANGLE SENSOR

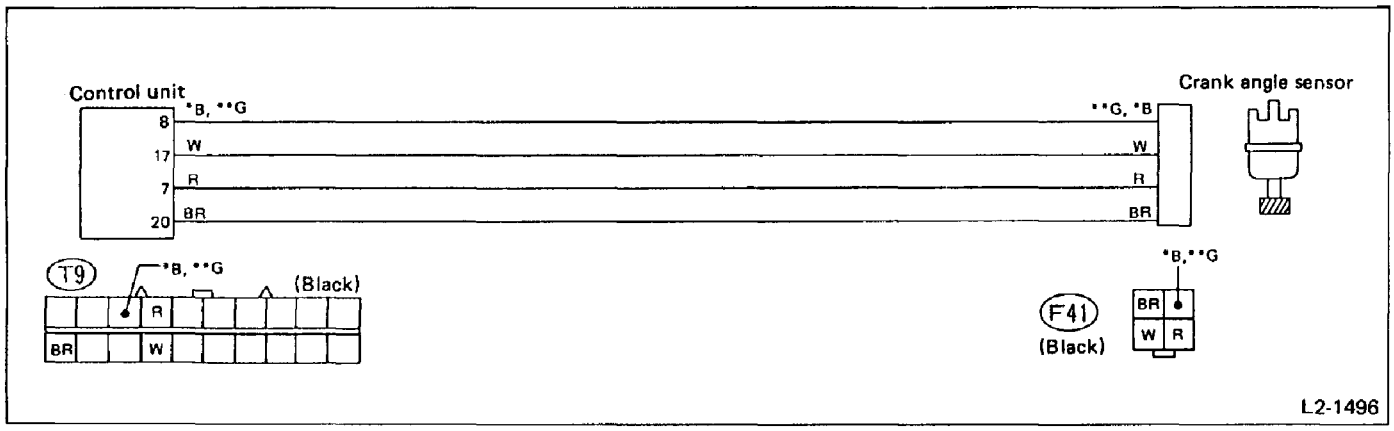

Fig. 80

*: 1800 cc model **: 2700 cc model

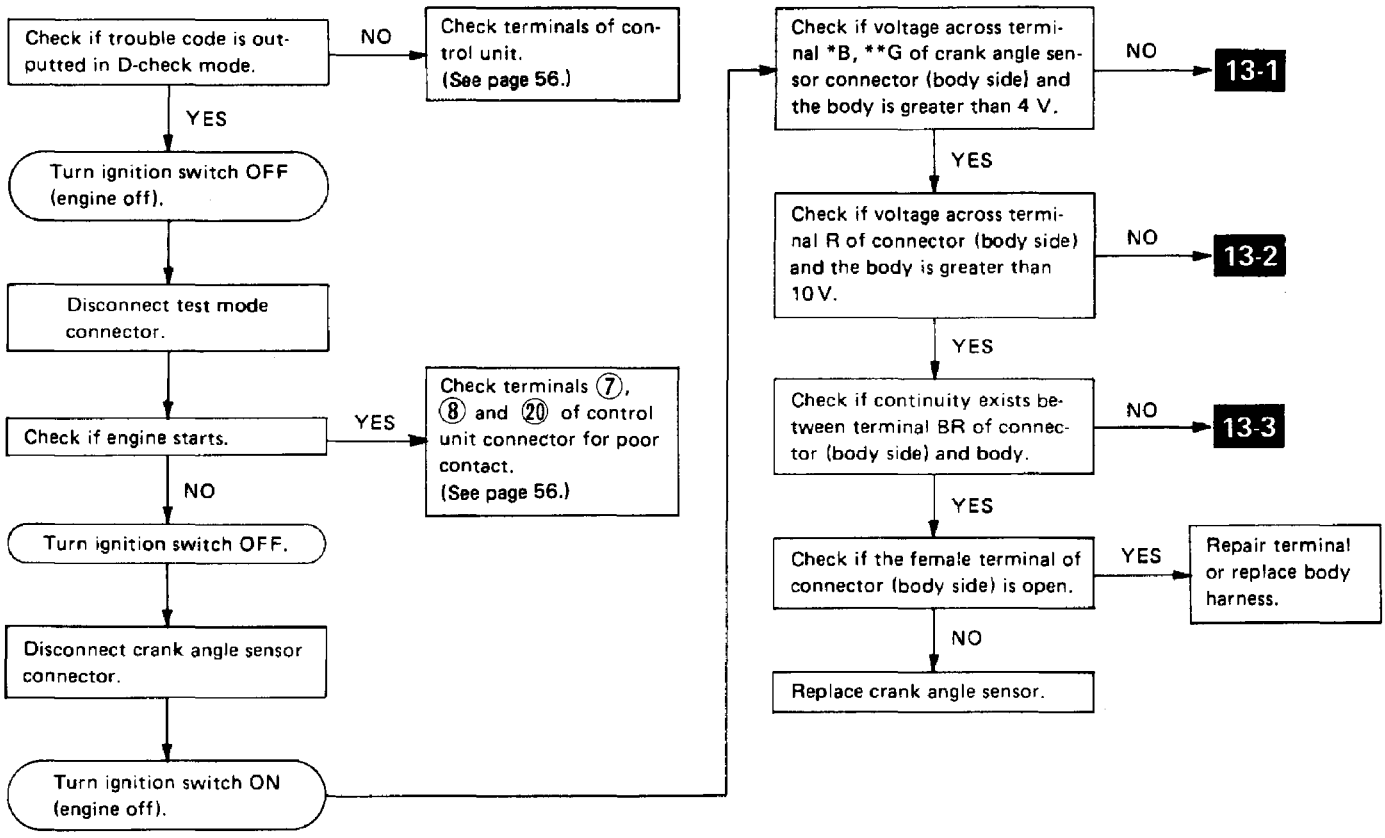

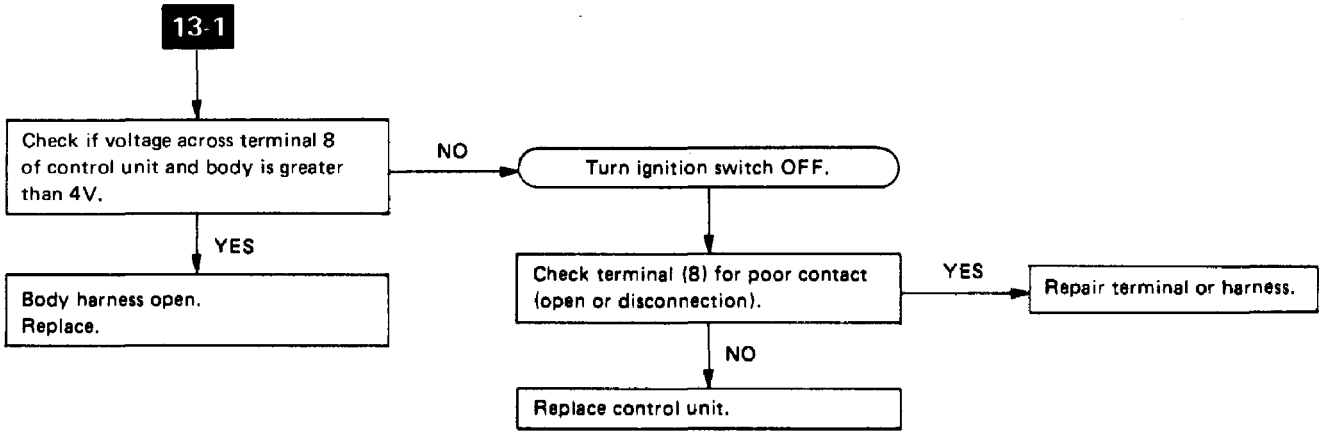
13-1
Check if voltage across terminal 8 of control unit and body is greater than 4V.
NO
Turn ignition switch OFF.
YES
Body harness open. Replace.
Check terminal (8) for poor contact (open or disconnection).
YES
Repair terminal or harness.
NO
Replace control unit.

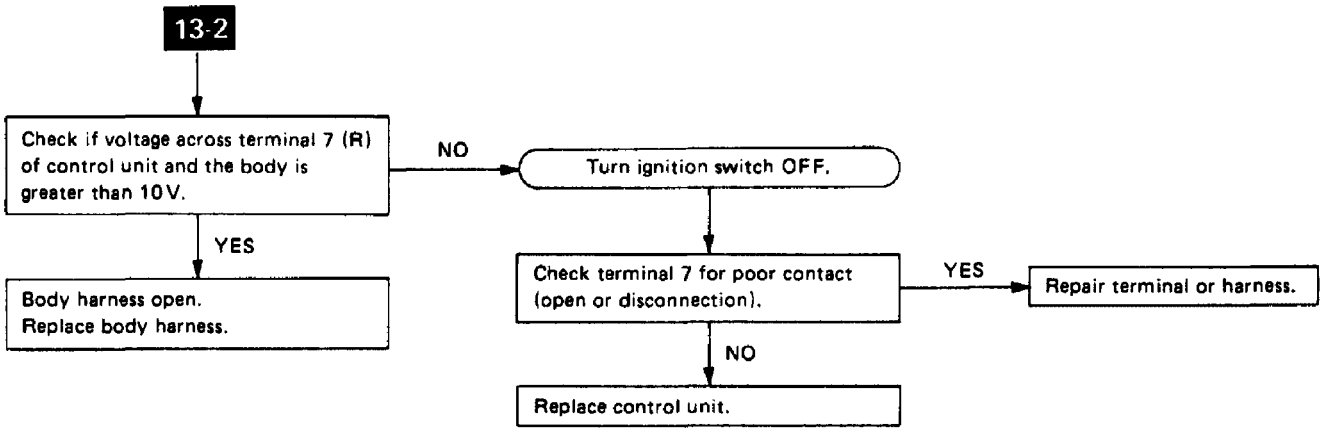
13-2
Check if voltage across terminal 7 (R) of control unit and the body is greater than 10V.
NO
Turn ignition switch OFF.
YES
Body harness open. Replace body harness.
Check terminal 7 for poor contact (open or disconnection).
YES
Repair terminal or harness.
NO
Replace control unit.

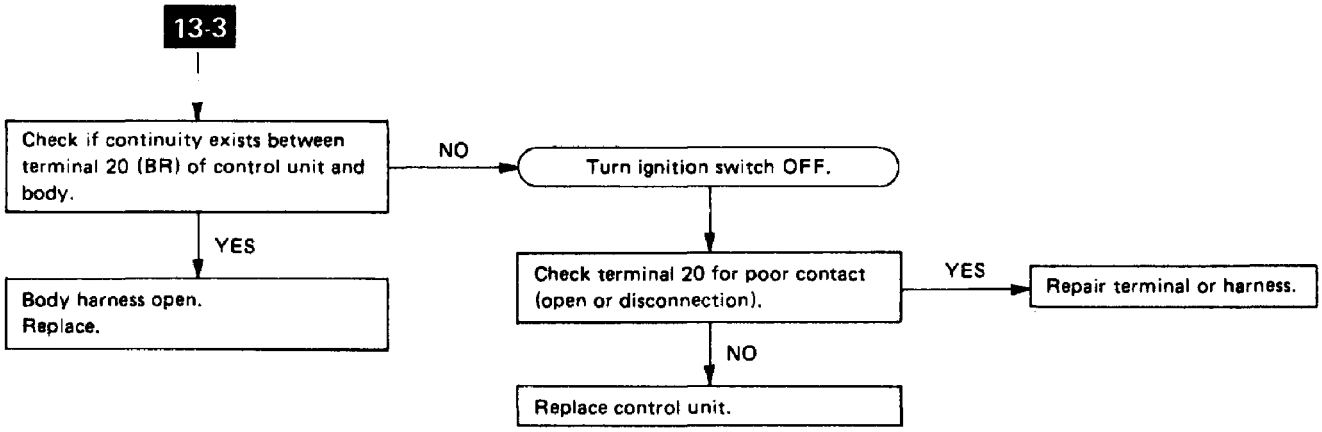
13-3
Check if continuity exists between terminal 20 (BR) of control unit and body.
NO
Turn ignition switch OFF.
YES
Body harness open. Replace.
Check terminal 20 for poor contact (open or disconnection).
YES
Repair terminal or harness.
NO
Replace control unit.

TROUBLE CODE (14): FUEL INJECTOR [1800cc model]

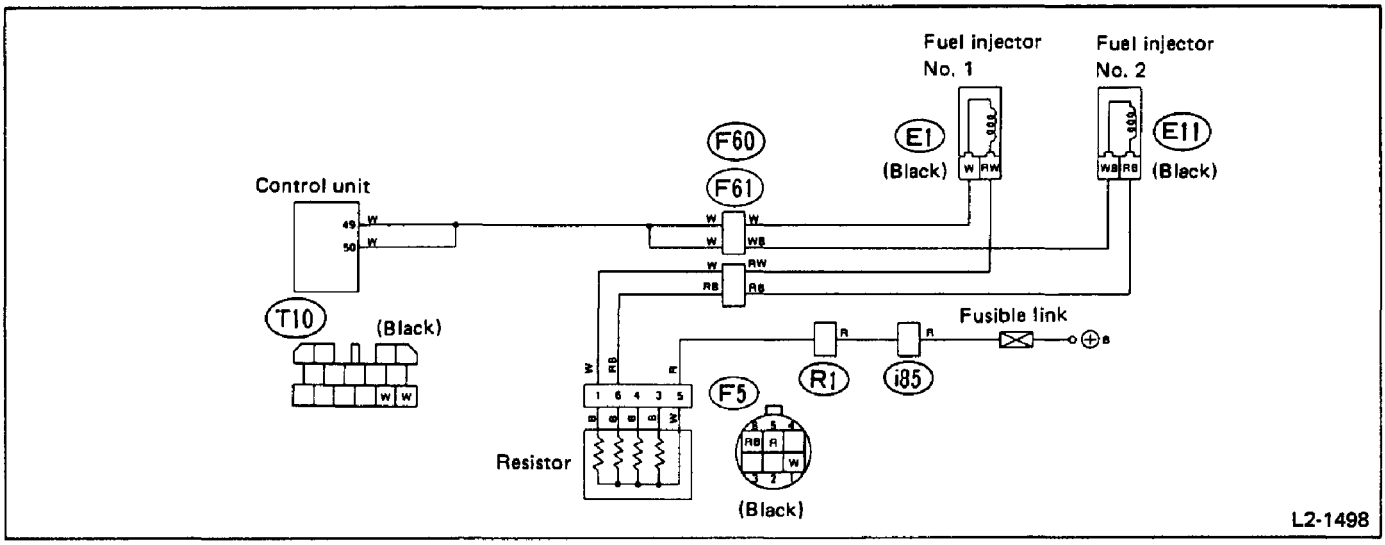

Fig. 81

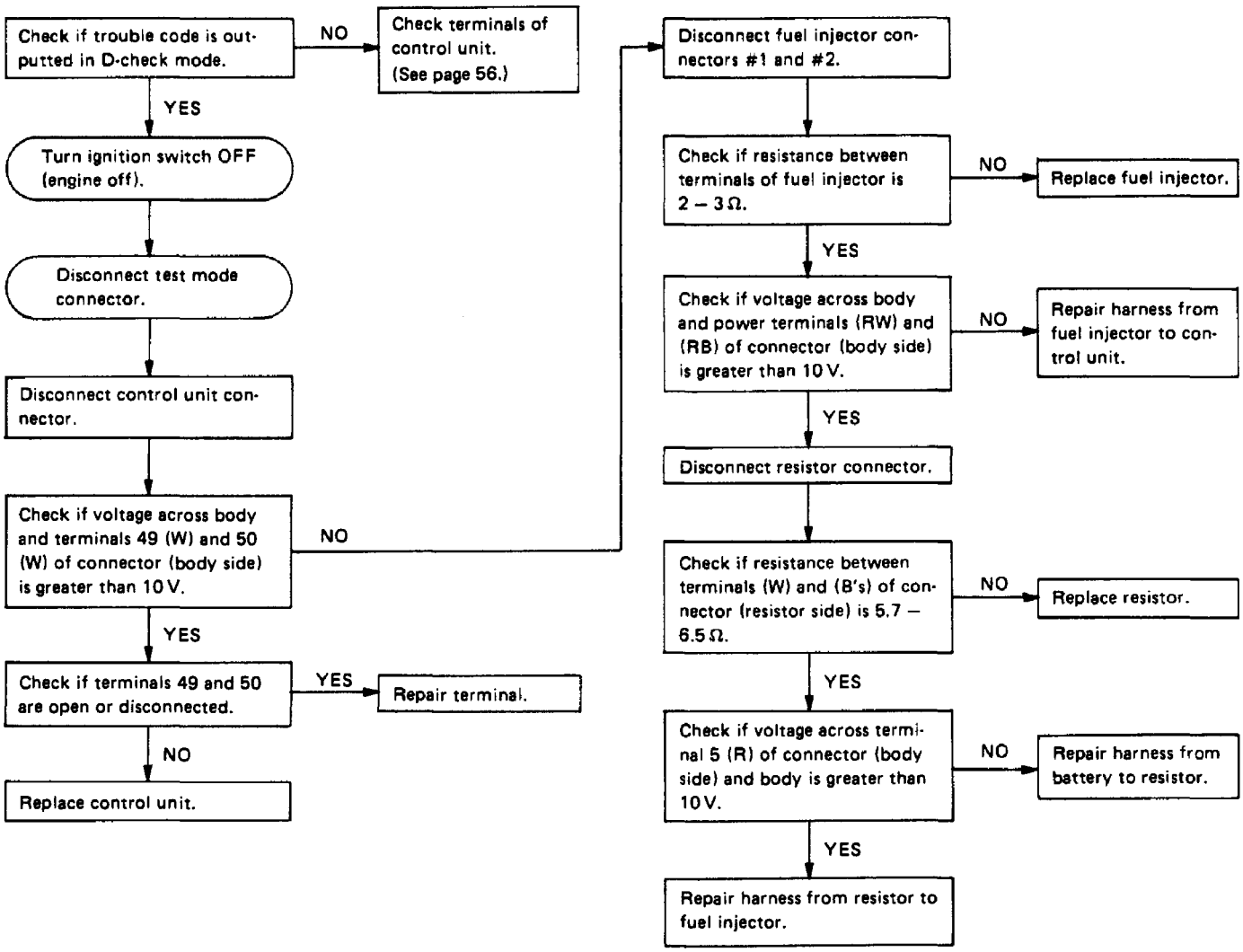

TROUBLE CODE (14): FUEL INJECTOR [2700cc model]

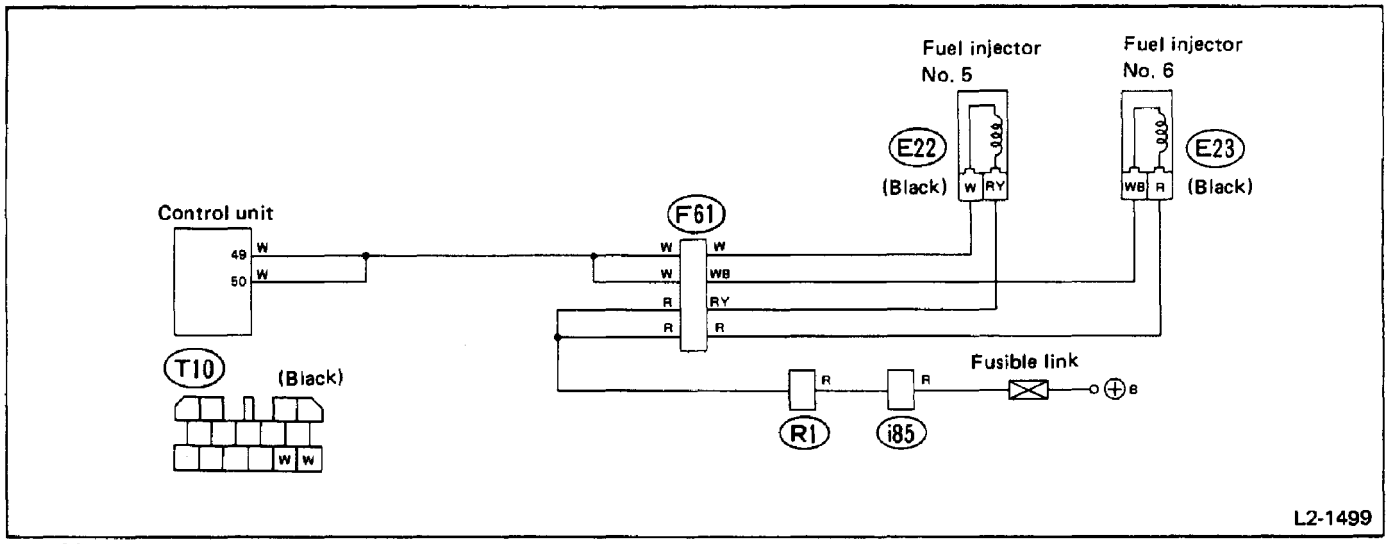

Fig. 82

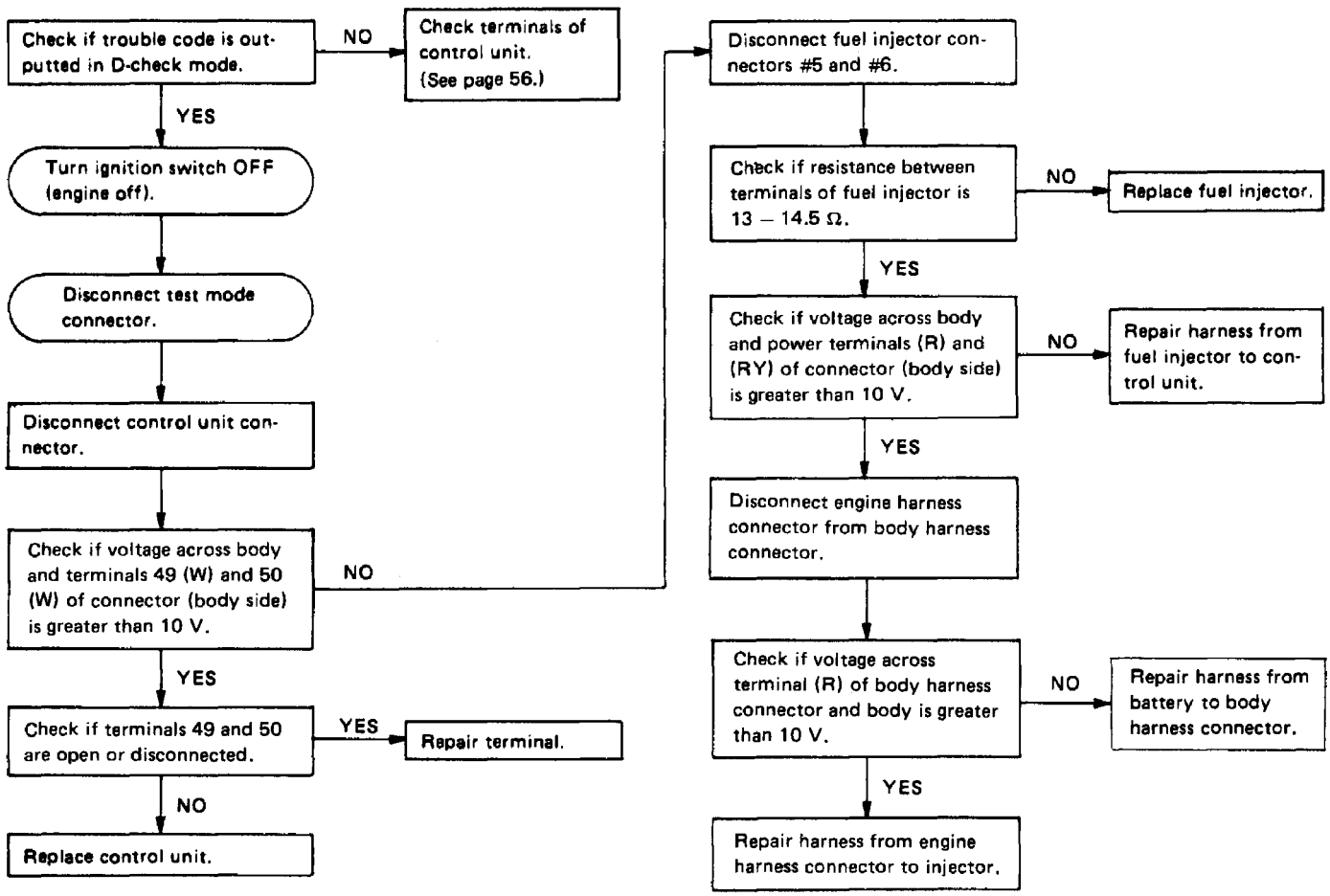

TROUBLE CODE (15): FUEL INJECTOR [1800cc model]

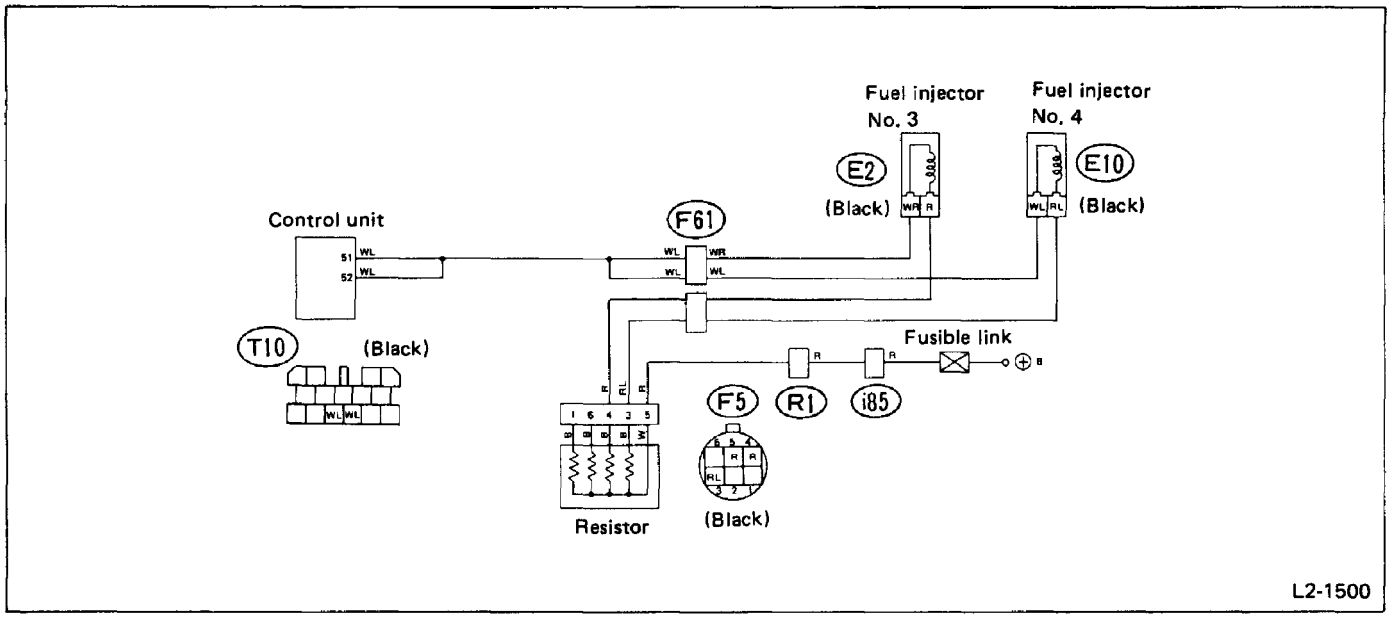

Fig. 83

Check if trouble code is outputted in D-check mode.
NO → Check terminals of control unit. (See page 56.)
YES
Turn ignition switch OFF (engine off).
Disconnect test mode connector.
Disconnect control unit connector.
Check if voltage across body and terminals 51 (WL) and 52 (WL) of connector (body side) is greater than 10 V.
NO → Disconnect injector connectors #3 and #4.
YES
Check if terminals 51 and 52 are open or disconnect.
YES → Repair terminal.
NO
Replace control unit.

Disconnect injector connectors #3 and #4.
Check if resistance between terminals of each injector is 2 – 3 Ω.
NO → Replace fuel injector.
YES
Check if voltage across body and power terminals (R) and (RL) of connector (body side) is greater than 10 V.
NO → Repair harness from fuel injector and control unit.
YES
Disconnect resistor connector.
Check if resistance between terminals (W) and (B's) of connector (resistor side) is 5.7 – 6.5 Ω.
NO → Replace resistor.
YES
Check if voltage across terminal 5 (R) of connector (body side) and body is greater than 10 V.
NO → Repair harness from battery to resistor.
YES
Repair harness from resistor to fuel injector.

TROUBLE CODE (15): FUEL INJECTOR [2700cc model]

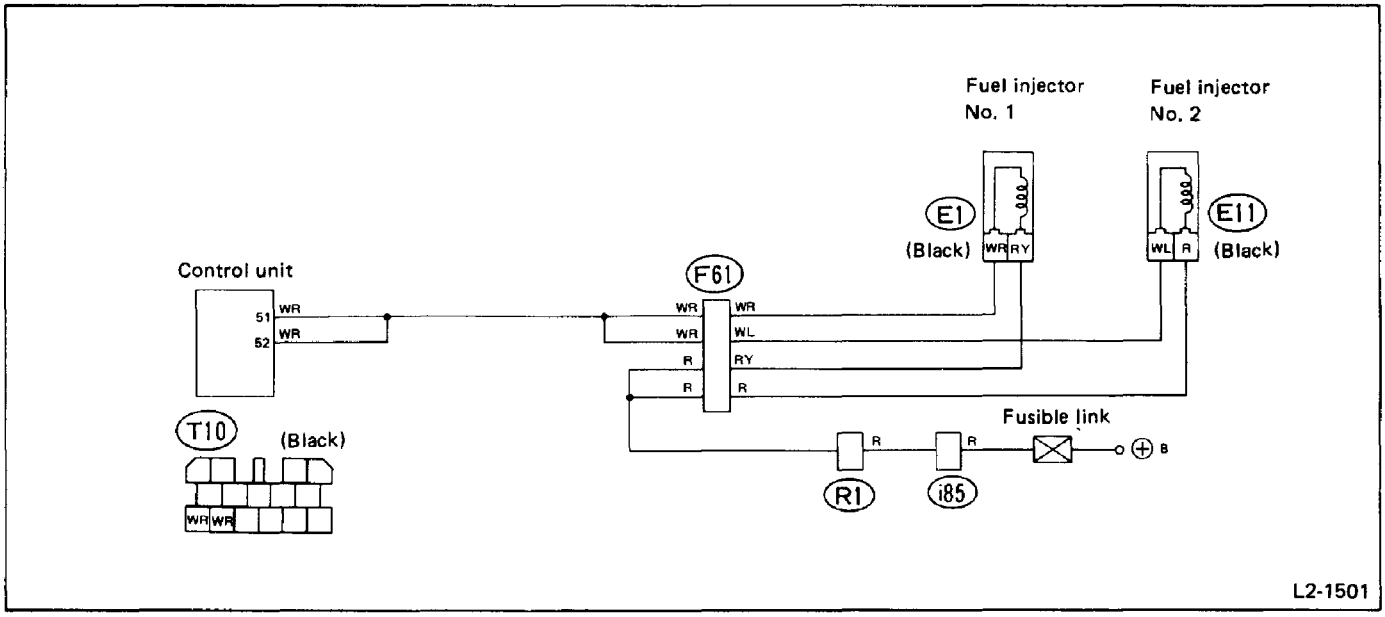

Fig. 84

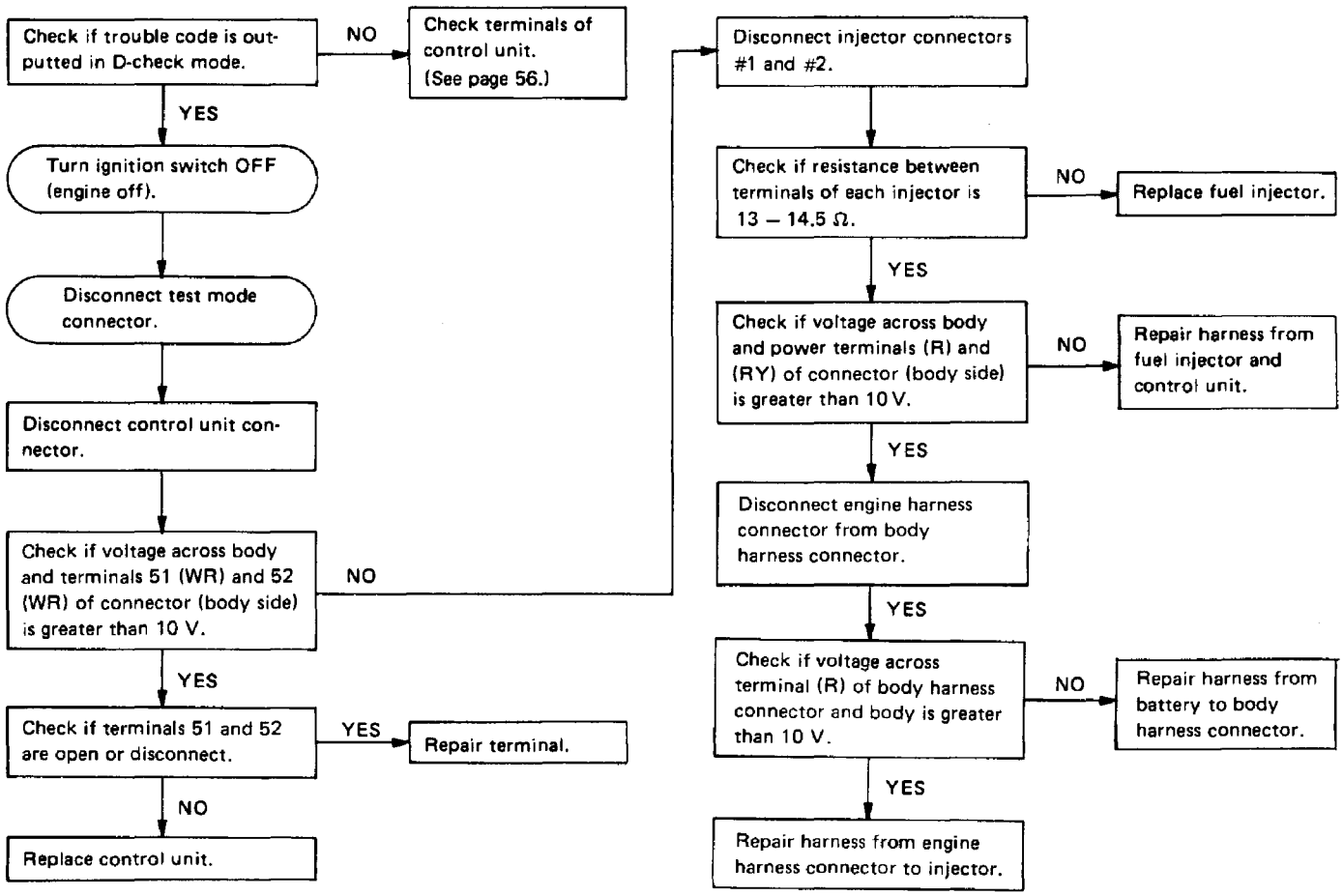

TROUBLE CODE (21): WATER TEMPERATURE SENSOR

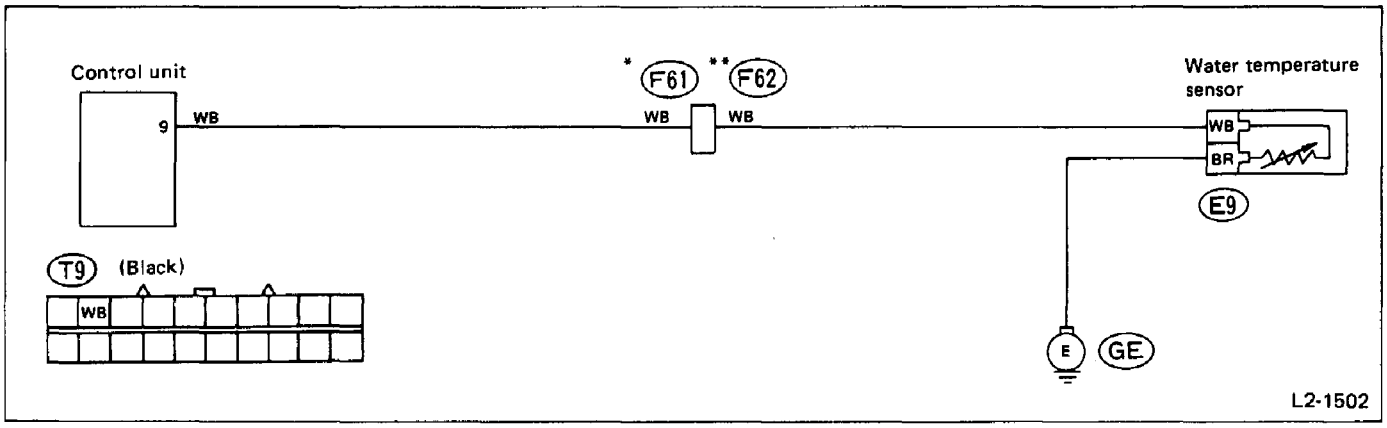

Fig. 85

*: 1800 cc model **: 2700 cc model

Check if trouble code is outputted in D-check mode.
NO → Check terminals of control unit. (See page 56.)
YES
Turn ignition switch OFF (engine off).
Disconnect test mode connector.
Turn ignition switch OFF.
Disconnect control unit connector.
Check if resistance between terminal 9 (WB) and body is 100 Ω – 20 kΩ.
NO → Disconnect water temperature sensor.
YES
Check female terminal 9 for poor contact.
NO → Replace control unit.
YES
Repair terminal or harness.

Disconnect water temperature sensor.
Check if resistance between terminals on sensor side is 100 Ω – 20 kΩ.
NO → Replace water temperature sensor.
YES
Check if continuity exists between terminal BR of connector (body side) and body.
NO → Repair engine harness.
YES
Connect water temperature sensor.
Disconnect engine-to-body harness connector.
Check if resistance between terminal (WB) of connector (engine side) and body is 100 Ω – 20 kΩ.
NO → Repair engine harness.
YES
Repair body harness.

TROUBLE CODE (22): KNOCK SENSOR [2700cc model]

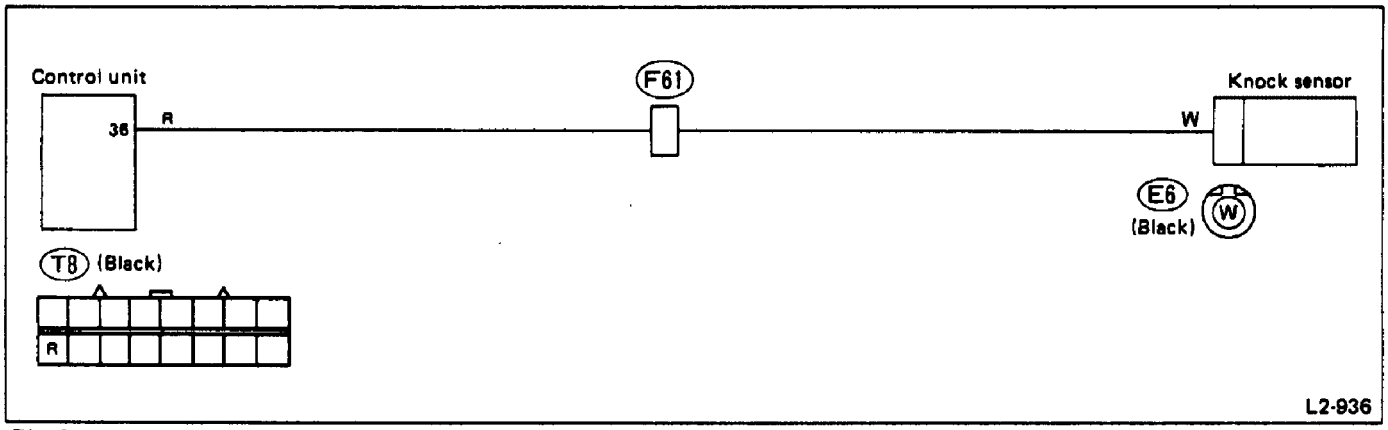

Fig. 86

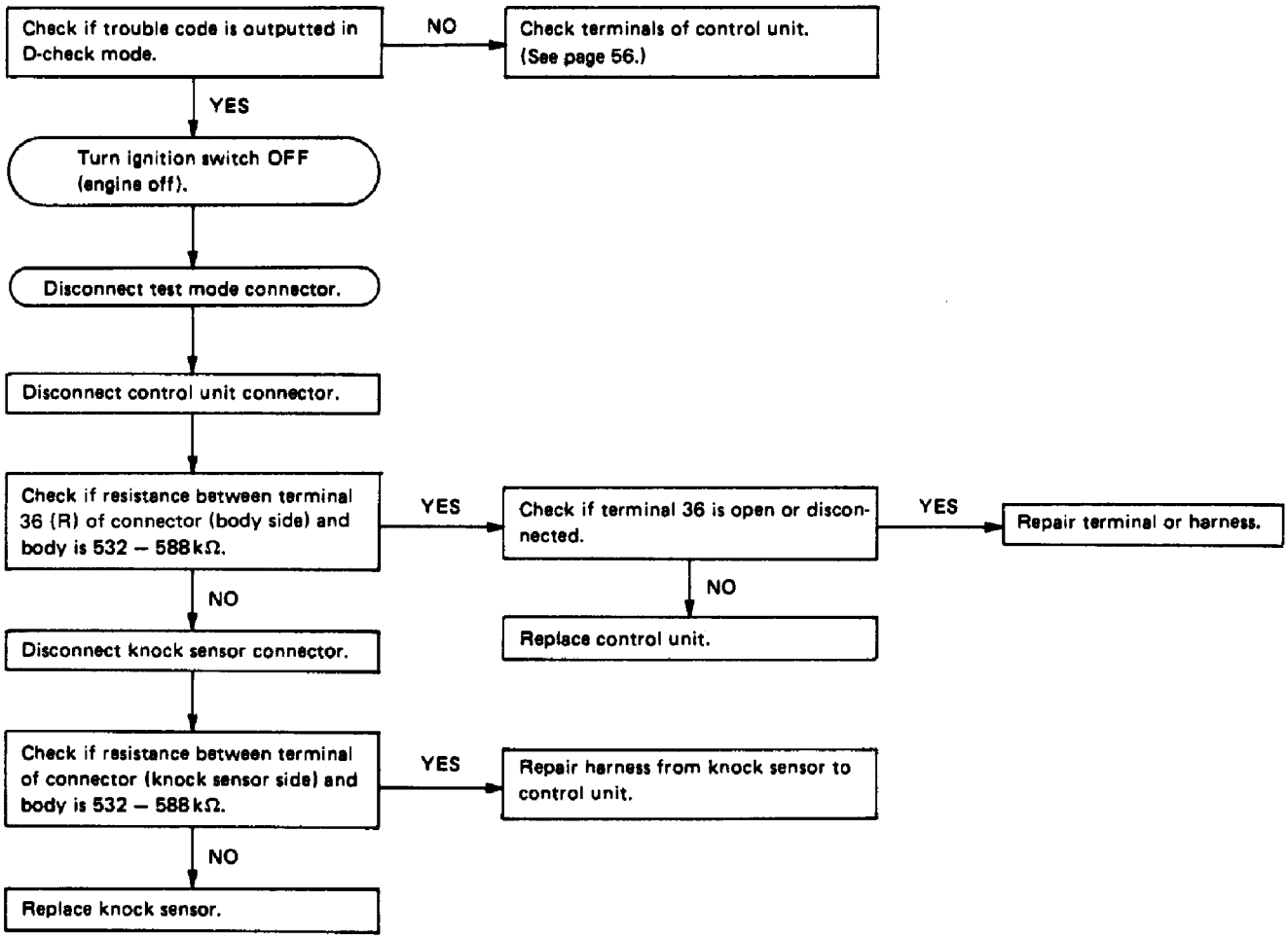

TROUBLE CODE (23): AIR FLOW METER

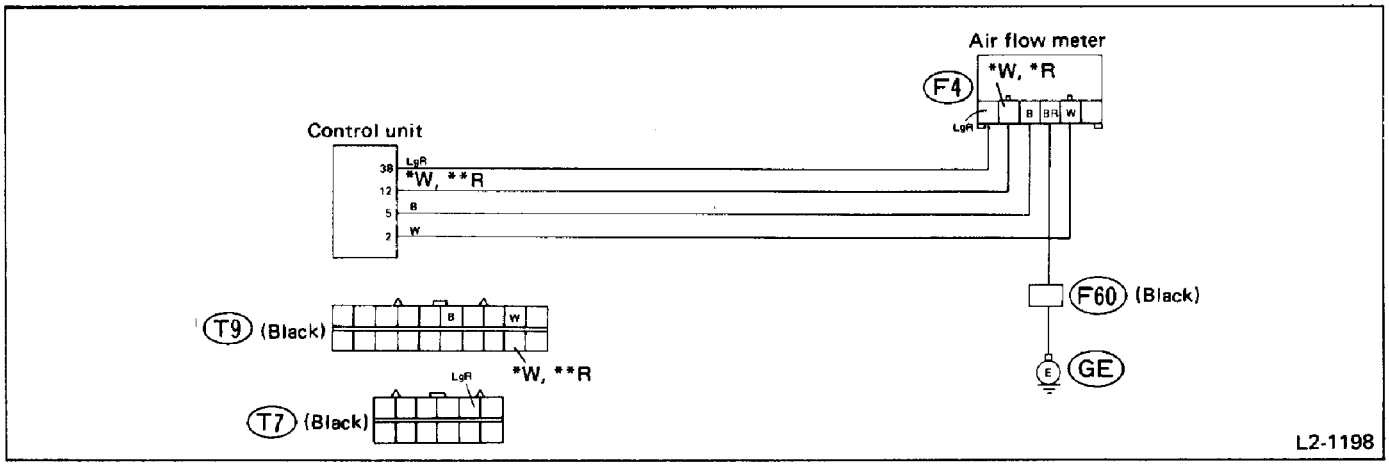

Fig. 87

*: 1800 cc model **: 2700 cc model

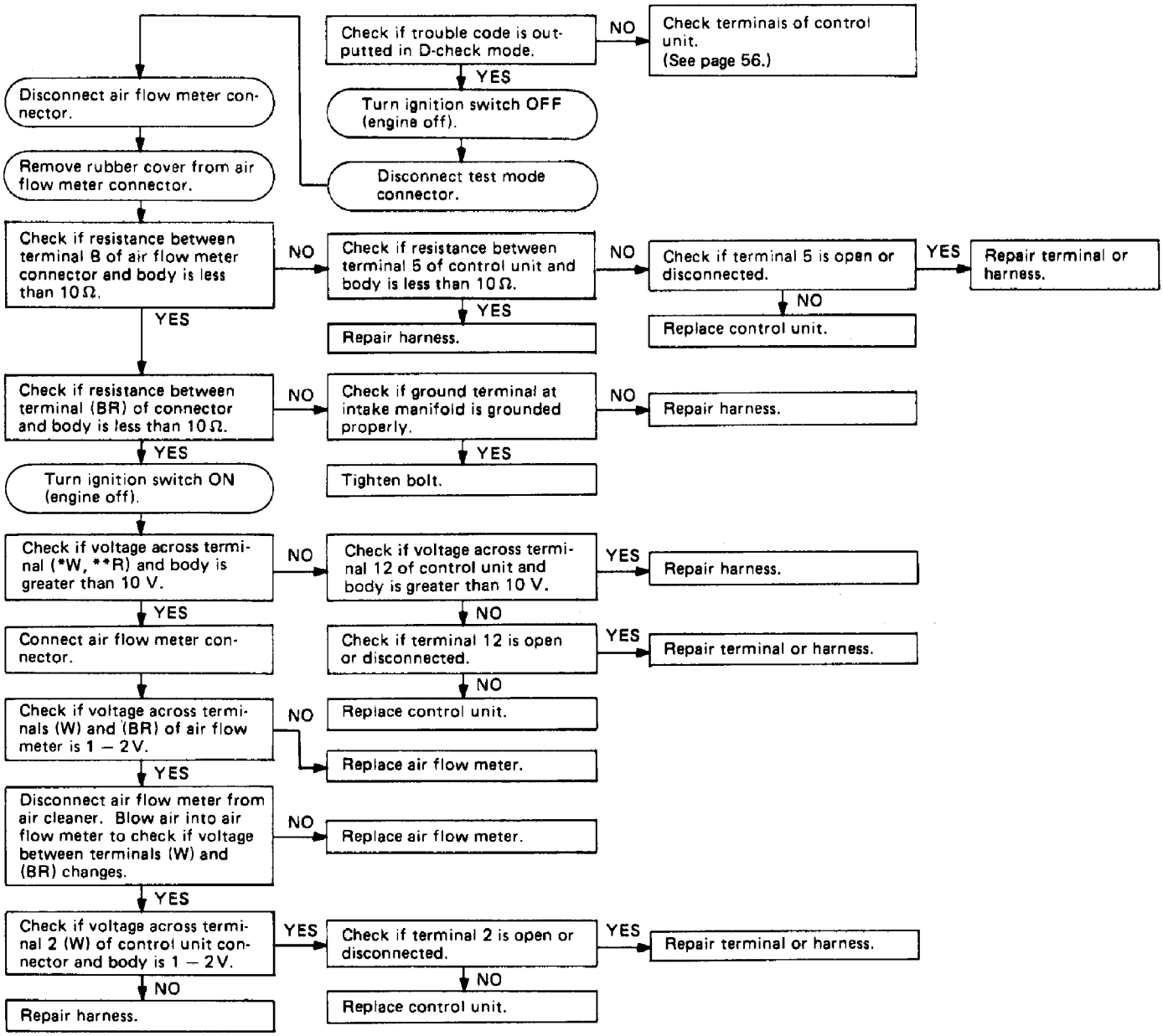

TROUBLE CODE (24): BY-PASS AIR CONTROL VALVE

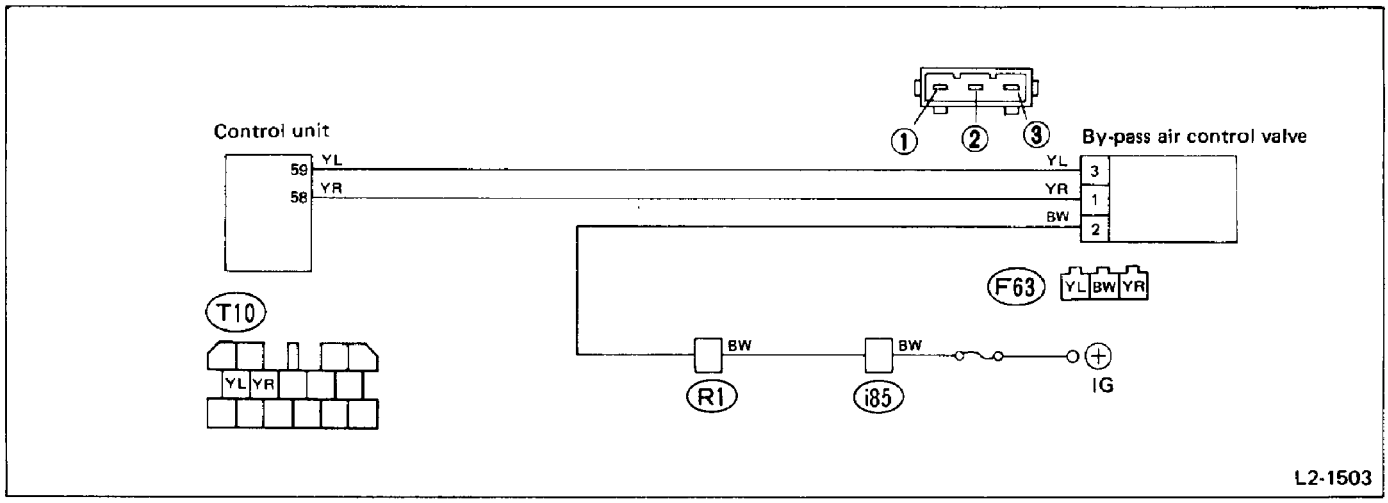

Fig. 88

Check if trouble code is outputted in D-check mode.
NO → Check terminals of control unit. (See page 56.)
YES ↓
Turn ignition switch OFF (engine off).
↓
Disconnect test mode connector.
↓
Disconnect control unit connector.
↓
Turn ignition switch ON (engine off).
↓
Check if voltage between control unit connector (body side) by-pass air terminal (YR) and car body, and by-pass air terminal (YL) and car body is greater than 10 V.
NO → Disconnect by-pass air control valve connector.
→ Check if voltage between terminal (BW) of control valve connector (body side) and car body is greater than 10 V.
NO → Repair harness from battery to control valve.
YES ↓
Check if resistance between terminals ① and ② of control valve is 9.5 – 11.5 Ω, and between terminals ② and ③ is 8.5 – 10.5 Ω.
→ Check if resistance between terminals ① and ② of control valve is 9.5 – 11.5 Ω and between terminal ② and ③ is 8.5 – 10.5 Ω.
NO → Replace by-pass air control valve.
YES ↓
Repair terminals.
YES ↓
Disconnect by-pass air control valve connector.
↓
Check if resistance between terminals ① and ② of control valve is 9.5 – 11.5 Ω, and between terminals ② and ③ is 8.5 – 10.5 Ω.
NO → Replace by-pass air control valve.
YES ↓
Remove by-pass air control valve from engine, and disconnect hoses.
↓
Connect control valve connector.
↓
Make sure the valve moves when ignition switch is turned ON and OFF.
NO → Replace by-pass air control valve.
YES ↓
Replace control unit.

TROUBLE CODE (25): FUEL INJECTOR [2700cc model]

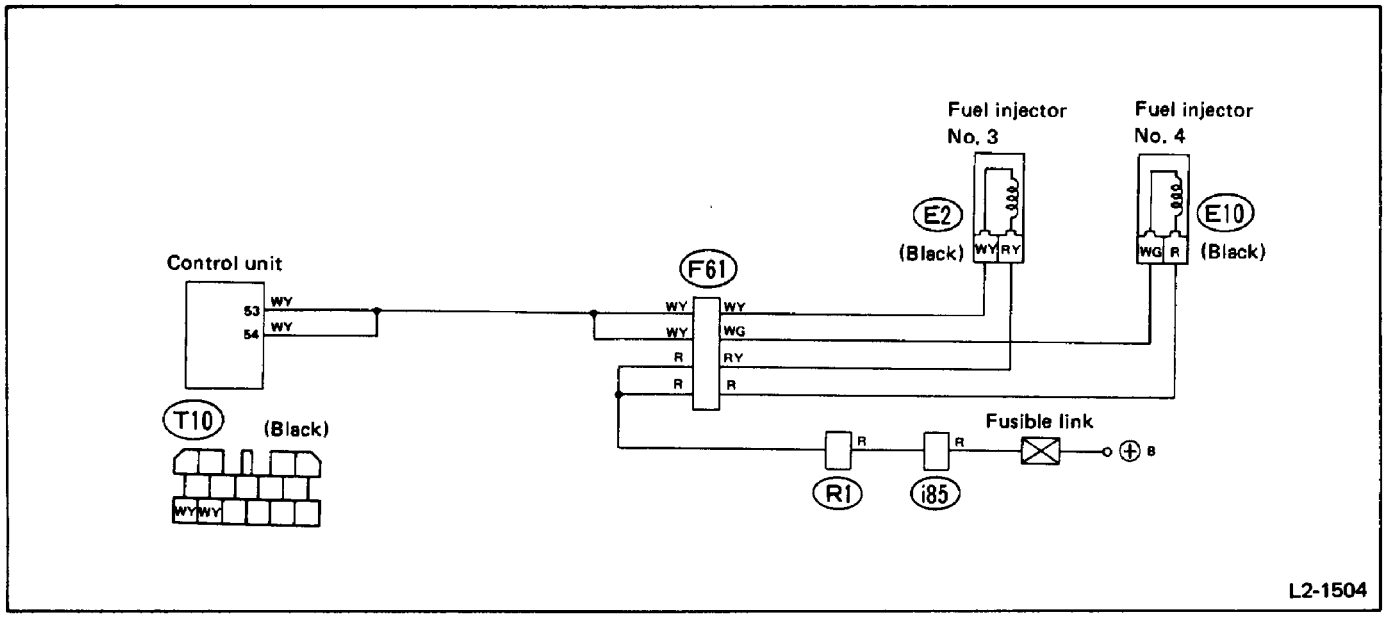

Fig. 89

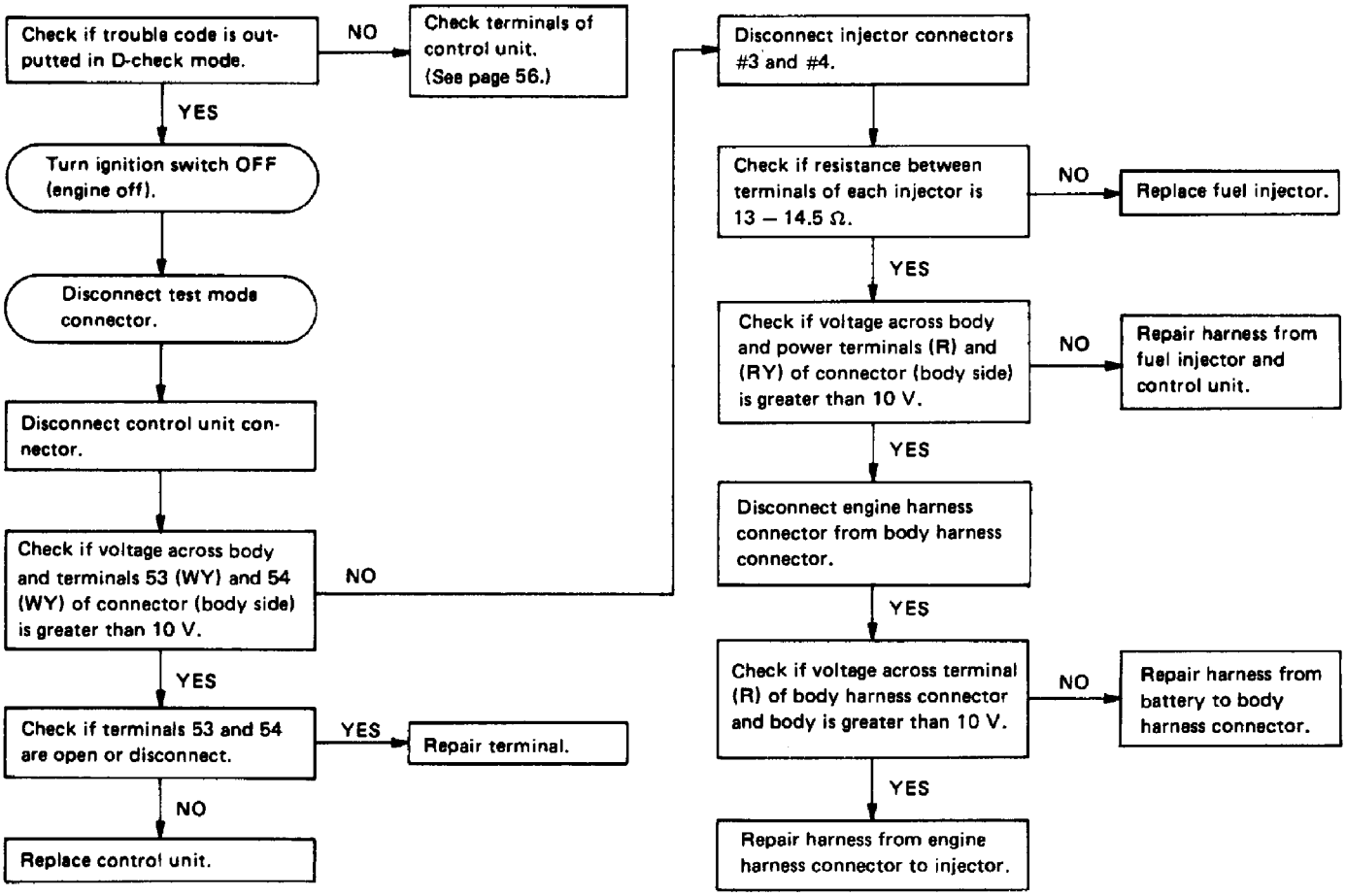

TROUBLE CODE (31): THROTTLE SENSOR [1800cc model]

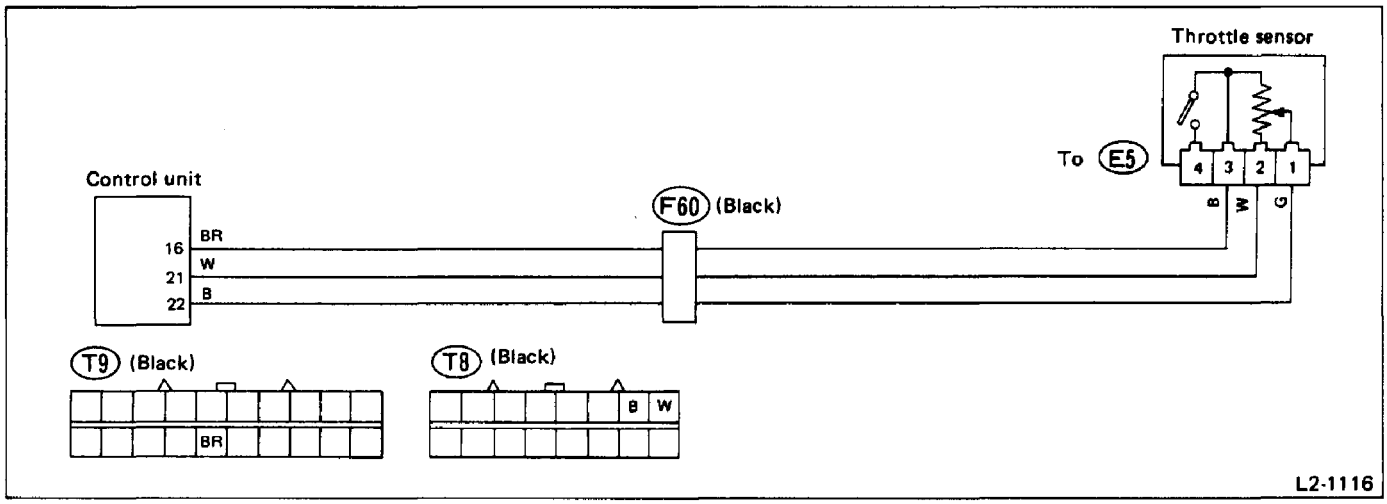

Fig. 90

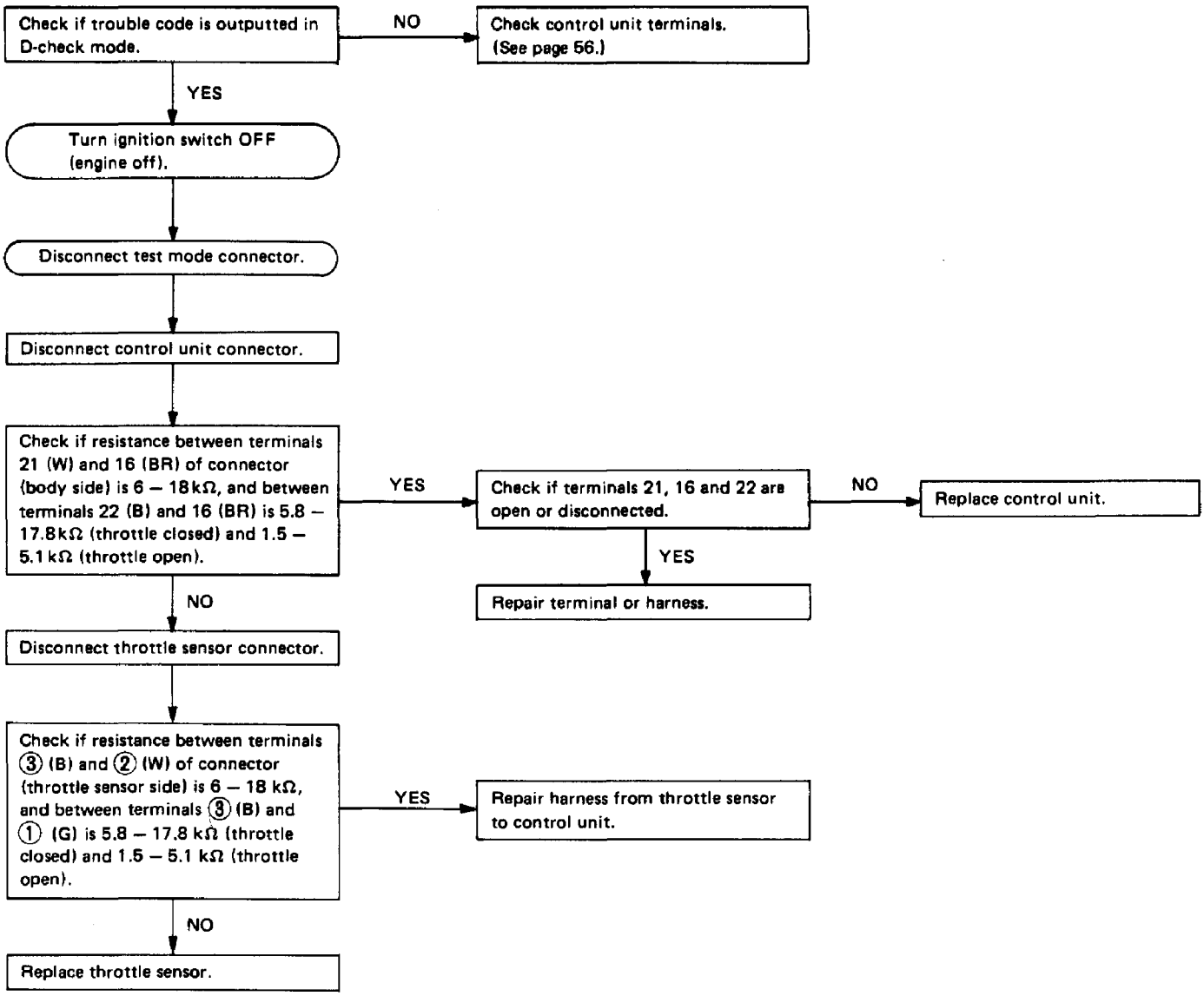

TROUBLE CODE (31): THROTTLE SENSOR [2700cc model]

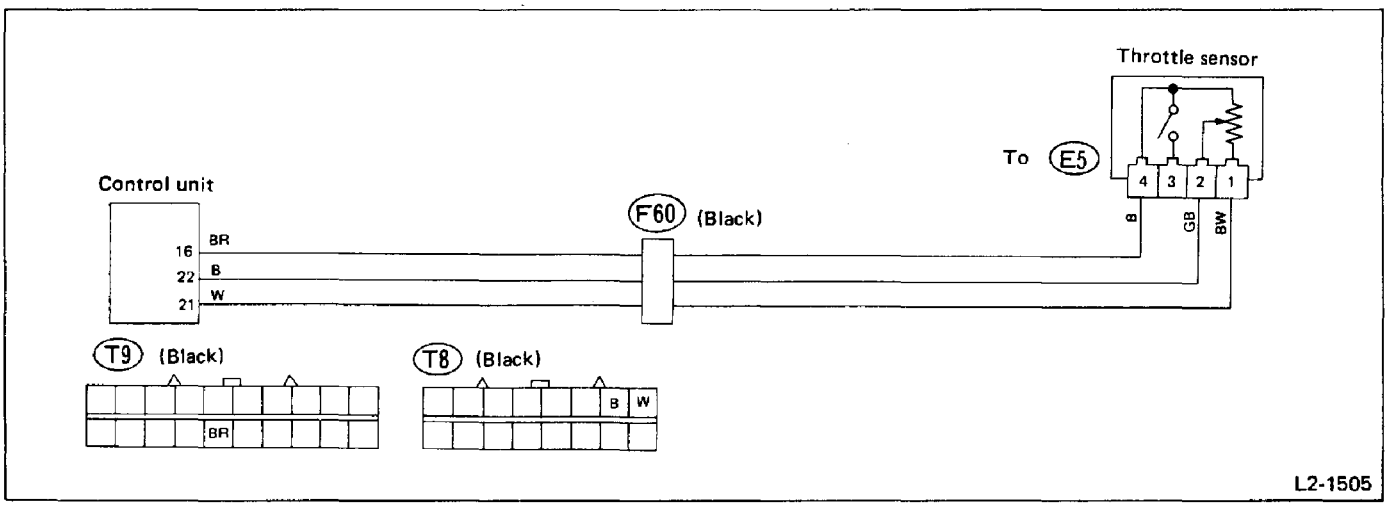

Fig. 91

Check if trouble code is outputted in D-check mode.
- NO → Check control unit terminals. (See page 56.)
- YES ↓

Turn ignition switch OFF (engine off).

↓

Disconnect test mode connector.

↓

Disconnect control unit connector.

↓

Check if resistance between terminals 21 (W) and 16 (BR) of connector (body side) is 3 – 7 kΩ, and between terminals 22 (B) and 16 (BR) is 4.2 – 15 kΩ (throttle closed) and 0.1 – 11 kΩ (throttle open).
- YES → Check if terminals 21, 16 and 22 are open or disconnected.
  - NO → Replace control unit.
  - YES → Repair terminal or harness.
- NO ↓

Disconnect throttle sensor connector.

↓

Check if resistance between terminals ① (BW) and ④ (B) of connector (throttle sensor side) is 3 – 7 kΩ, and between terminals ② (GB) and ④ (B) is 4.2 – 15 kΩ (throttle closed) and 0.1 – 11 kΩ (throttle open).
- YES → Repair harness from throttle sensor to control unit.
- NO ↓

Replace throttle sensor.

TROUBLE CODE (32): O_2 SENSOR

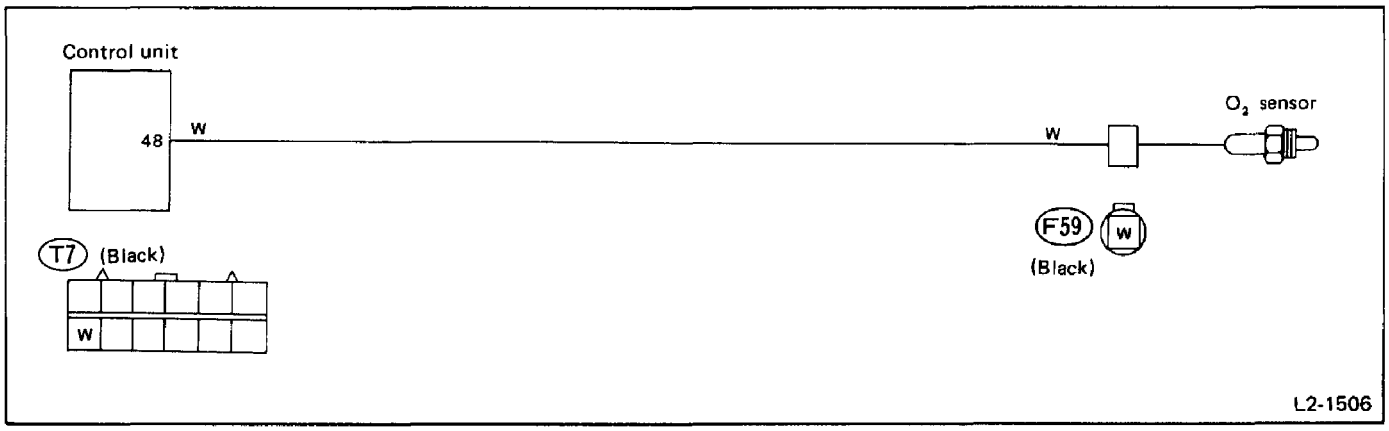

Fig. 92

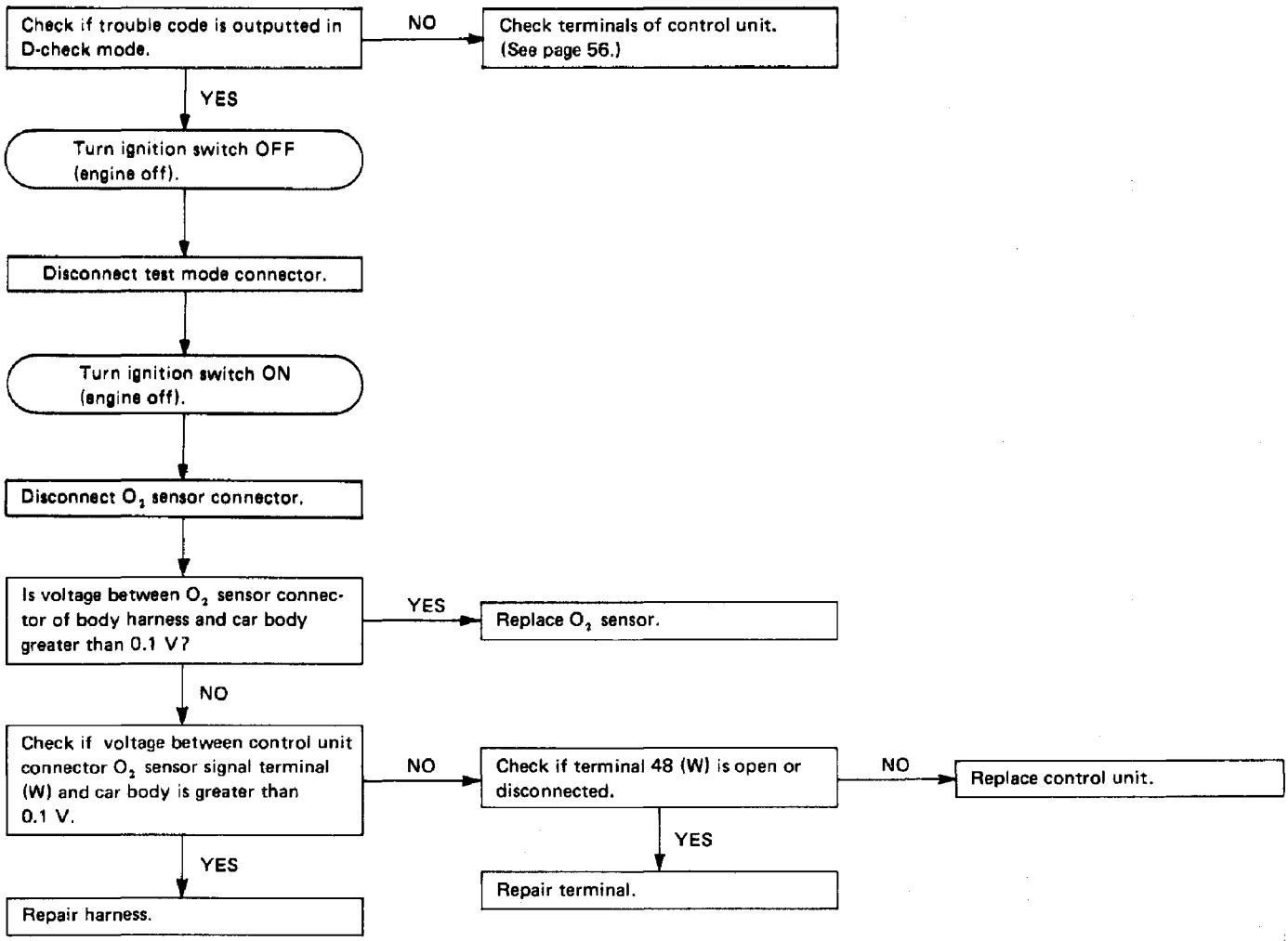

TROUBLE CODE (33): SPEED SENSOR

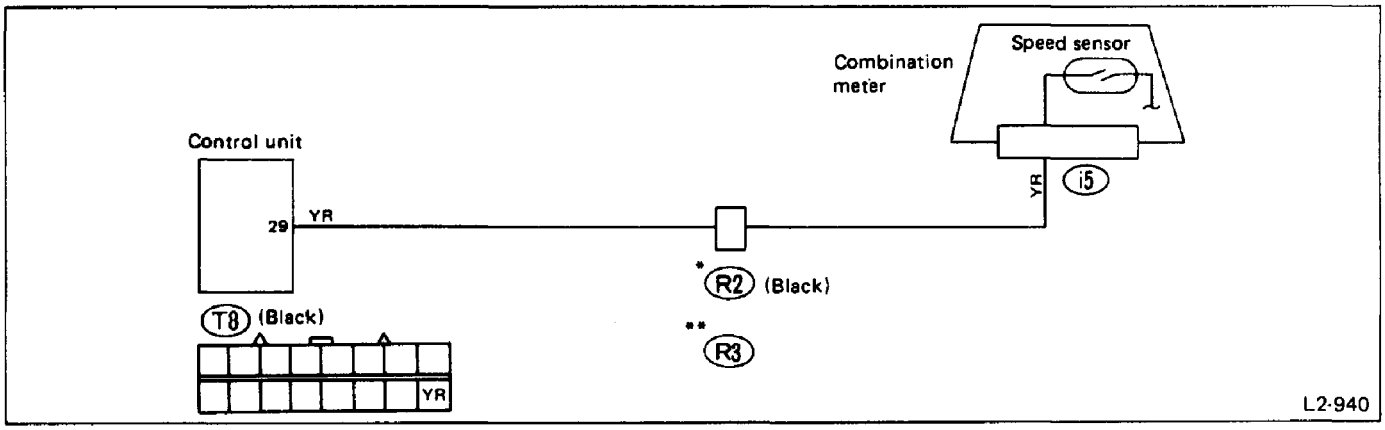

Fig. 93

*: 1800 cc model **: 2700 cc model

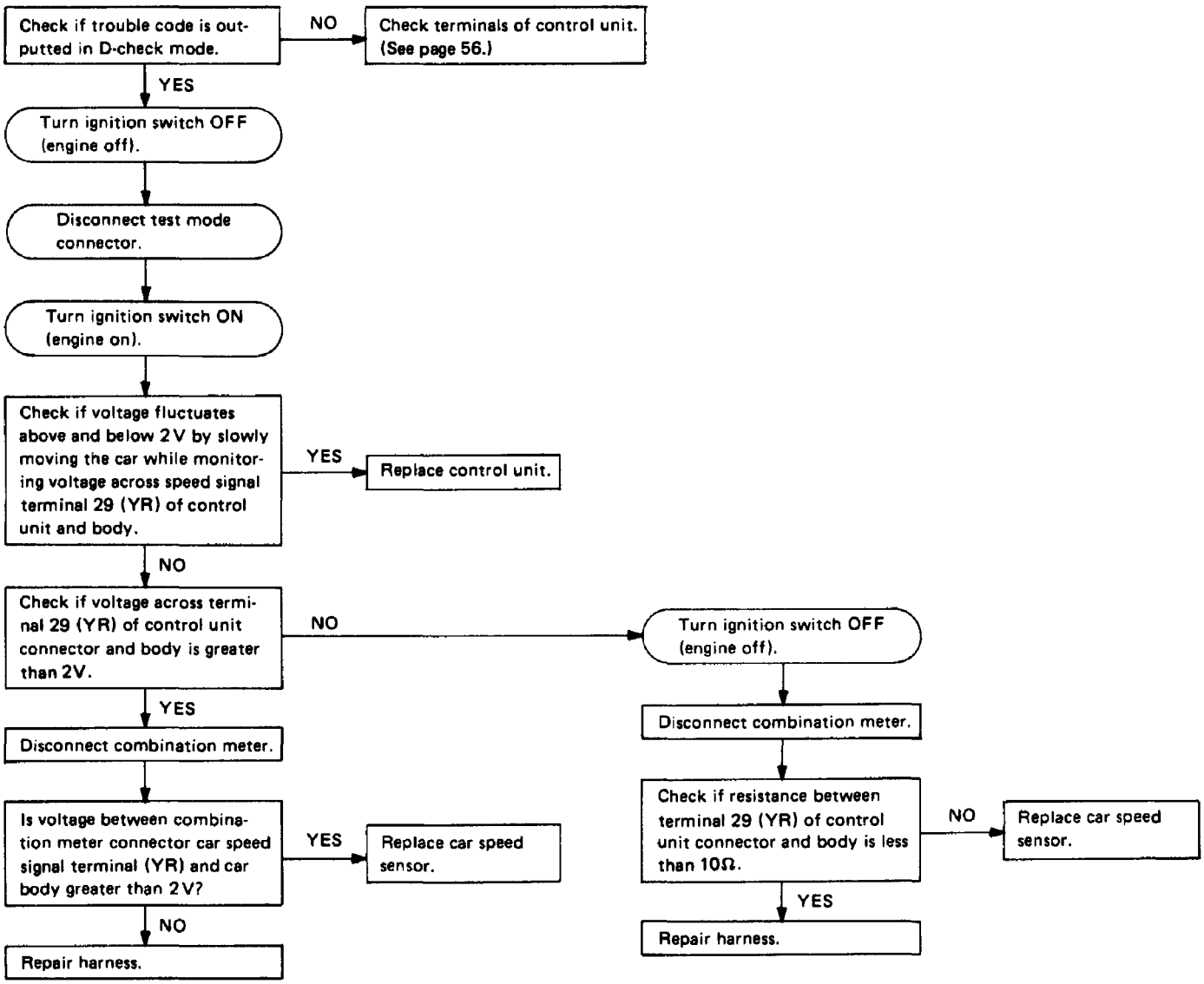

TROUBLE CODE (35): PURGE CONTROL SOLENOID VALVE

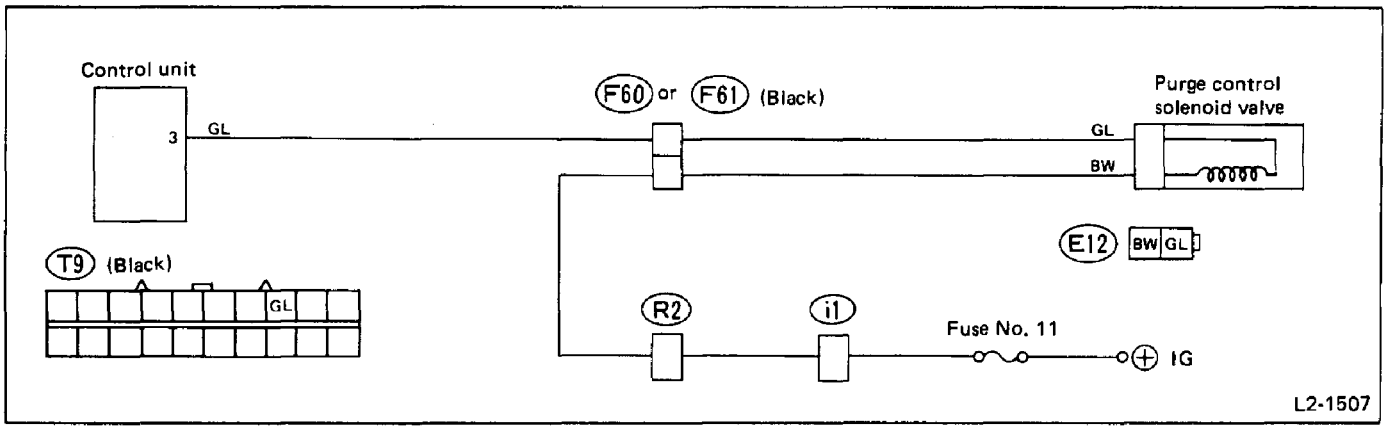

Fig. 94

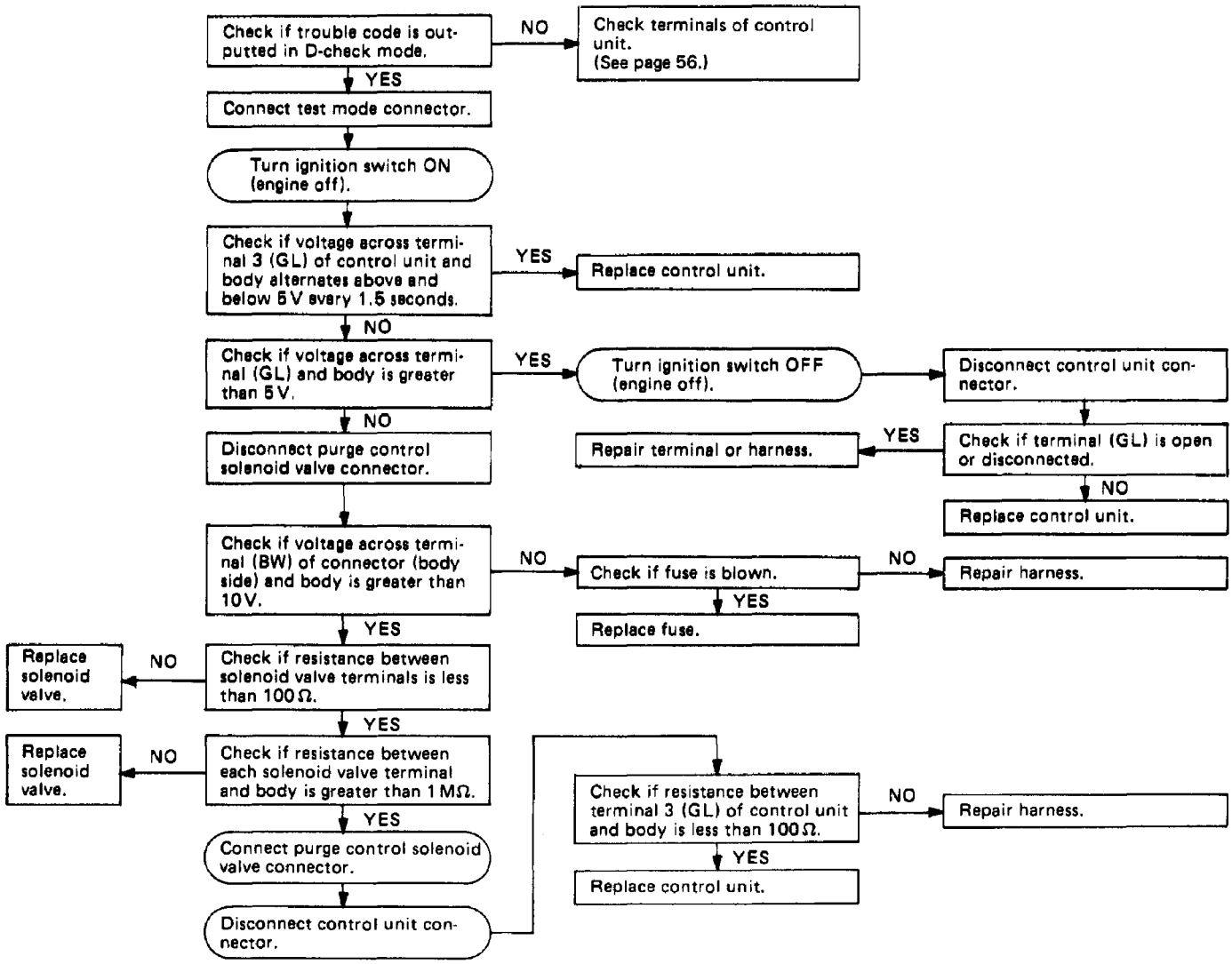

TROUBLE CODE (41): SYSTEM

Trouble code (41) indicates that the mixture is too lean. When another trouble code is not outputted, all system components are electrically in good order.
Check the following:
① Injector nozzles (for clogging)
② Fuel pressure
③ Performance characteristics of water temperature sensor
If the above three are OK, check the following:
④ Drive some distance after replacing the air flow meter.
If still no good, proceed to ⑤.
⑤ Replace fuel injectors and drive some distance.
If still no good, proceed as follow:
⑥ Replace control unit.

TROUBLE CODE (42): IDLE SWITCH

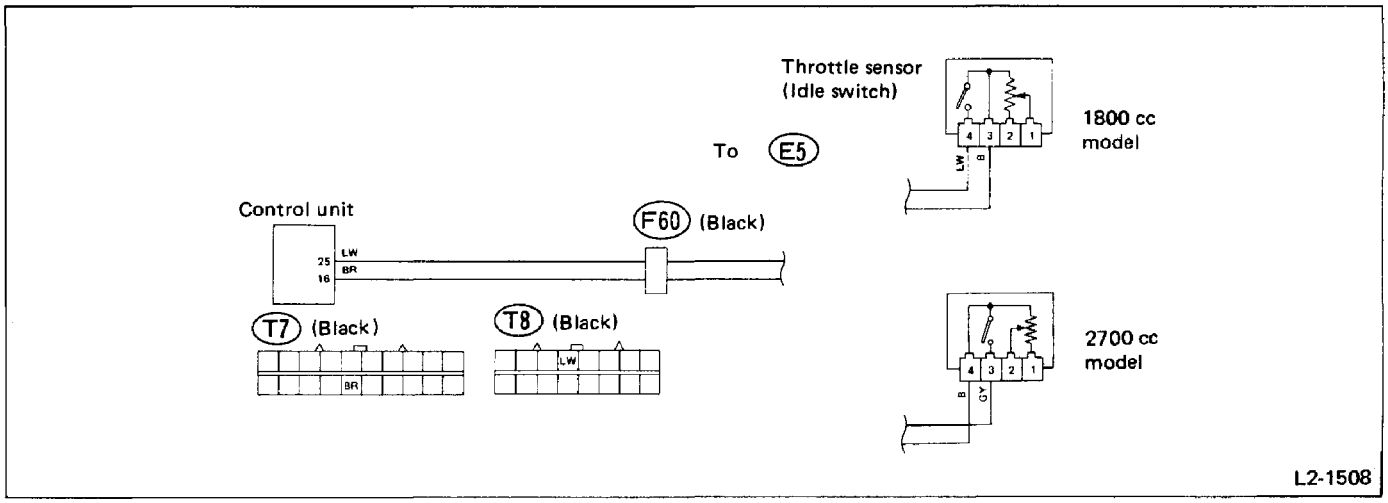

Fig. 95

Check if trouble code is outputted in D-check mode.
NO → Check terminals of control unit. (See page 56.)
YES ↓
Turn ignition switch OFF (engine off).
↓
Disconnect test mode connector.
↓
Disconnect control unit connector.
↓
Check if continuity exists between terminals 25 (LW) of connector (body side) and body when accelerator pedal is released and does not exist when accelerator pedal is depressed.
YES → Check if terminal 25 is open or disconnected.
NO → Replace control unit.
YES ↓ Repair terminal or harness.
NO ↓
Disconnect throttle sensor connector.
↓
Check if continuity exists between terminals ③ and ④ of connector (throttle sensor side) when accelerator pedal is released.
NO → Adjust throttle sensor as outlined in Chapter 2-7 on page 21.
YES ↓
Check if continuity exists when accelerator pedal is released.
NO → Replace throttle sensor.
YES ↓
Check if there is no continuity when accelerator pedal is depressed.
NO → Replace throttle sensor.
YES ↓
Repair harness.

TROUBLE CODE (51): NEUTRAL SWITCH [MT]

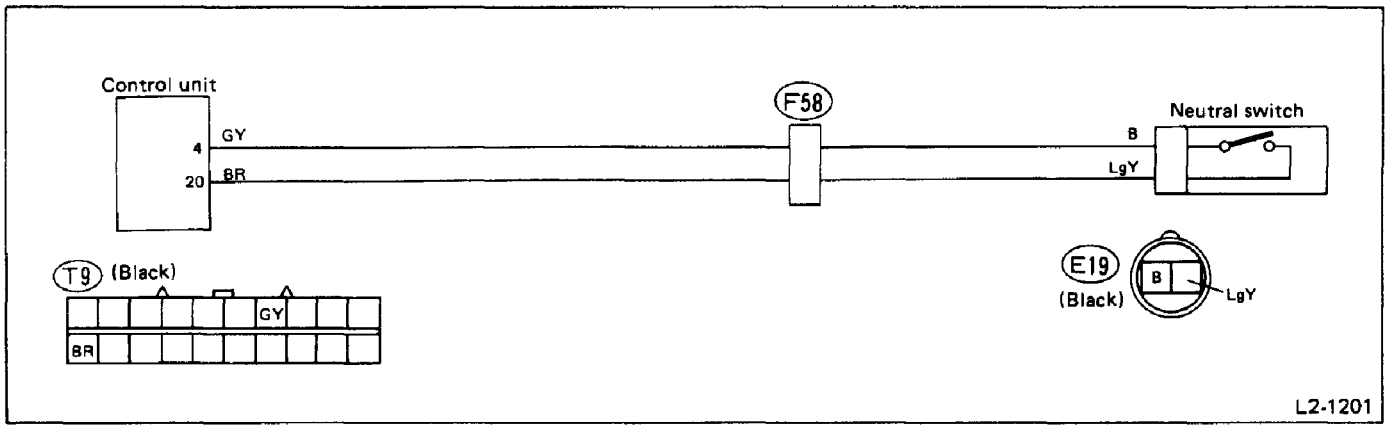

Fig. 96

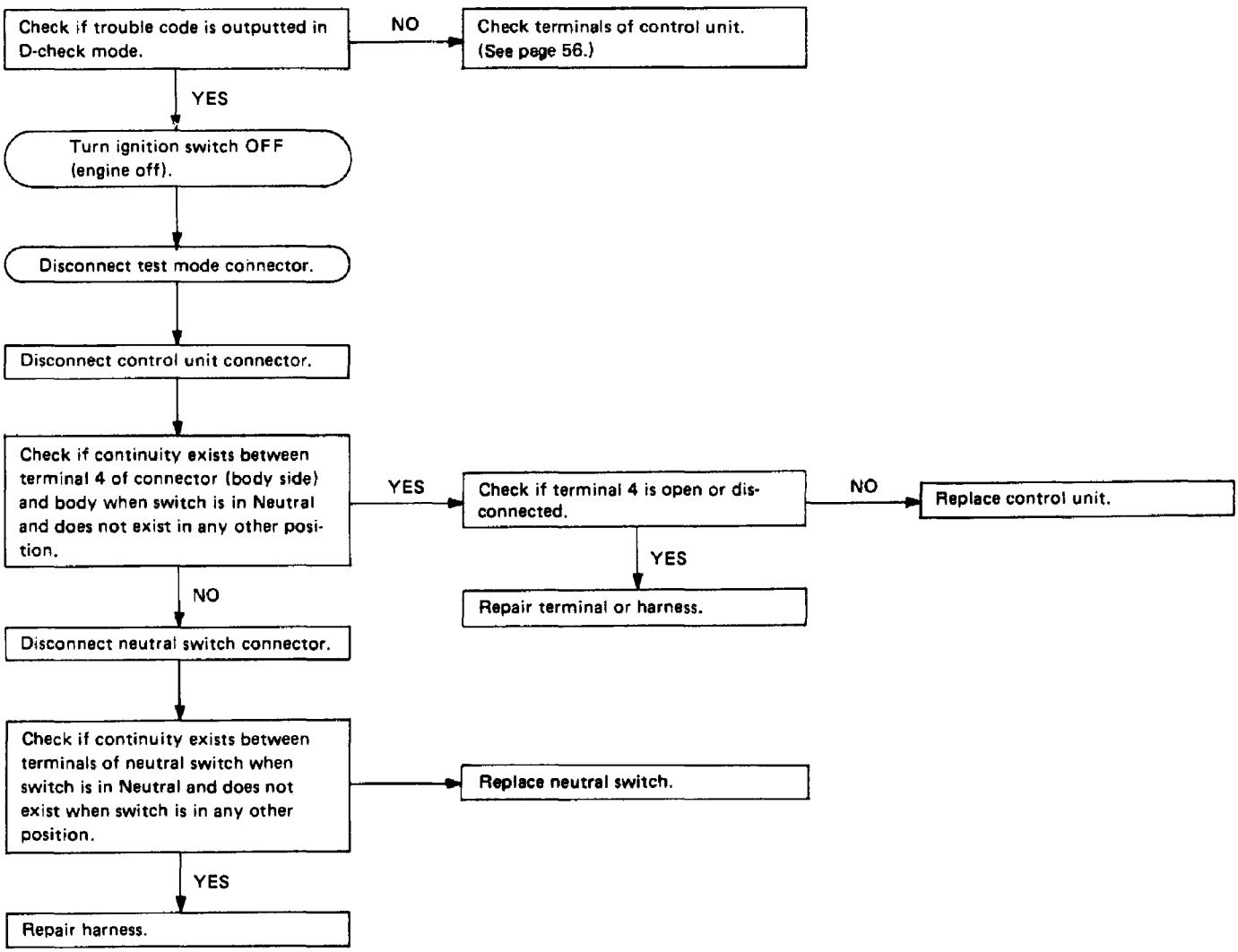

FUEL SYSTEM

2-8

SUBARU

1988

Page

MECHANISM AND FUNCTION 2
- Fuel Lines 2
- Fuel Tank 3

SPECIFICATIONS AND SERVICE DATA 3

COMPONENT PARTS 4

SERVICE PROCEDURE 6
- Fuel Tank 6
- Fuel Meter Unit 7
- Fuel Filler Pipe 7
- Fuel Separator 8
- Fuel Filter 9
- Fuel Pump 10
- Fuel Delivery, Return and Evaporation Lines 11

TROUBLESHOOTING 13

MECHANISM AND FUNCTION

Fuel Lines

Fuel is delivered from the fuel tank to the fuel pump via the filter inside the tank. It is then delivered to the fuel injectors via the fuel filter.

Part of the fuel is returned by the pressure regulator. On the 2700 cc model, a fuel damper is located in the center of the delivery hose to absorb pulsations produced by the fuel injectors and the pressure regulator. Thus, vibration resulting from fuel pulsation is not transmitted to the passenger compartment.

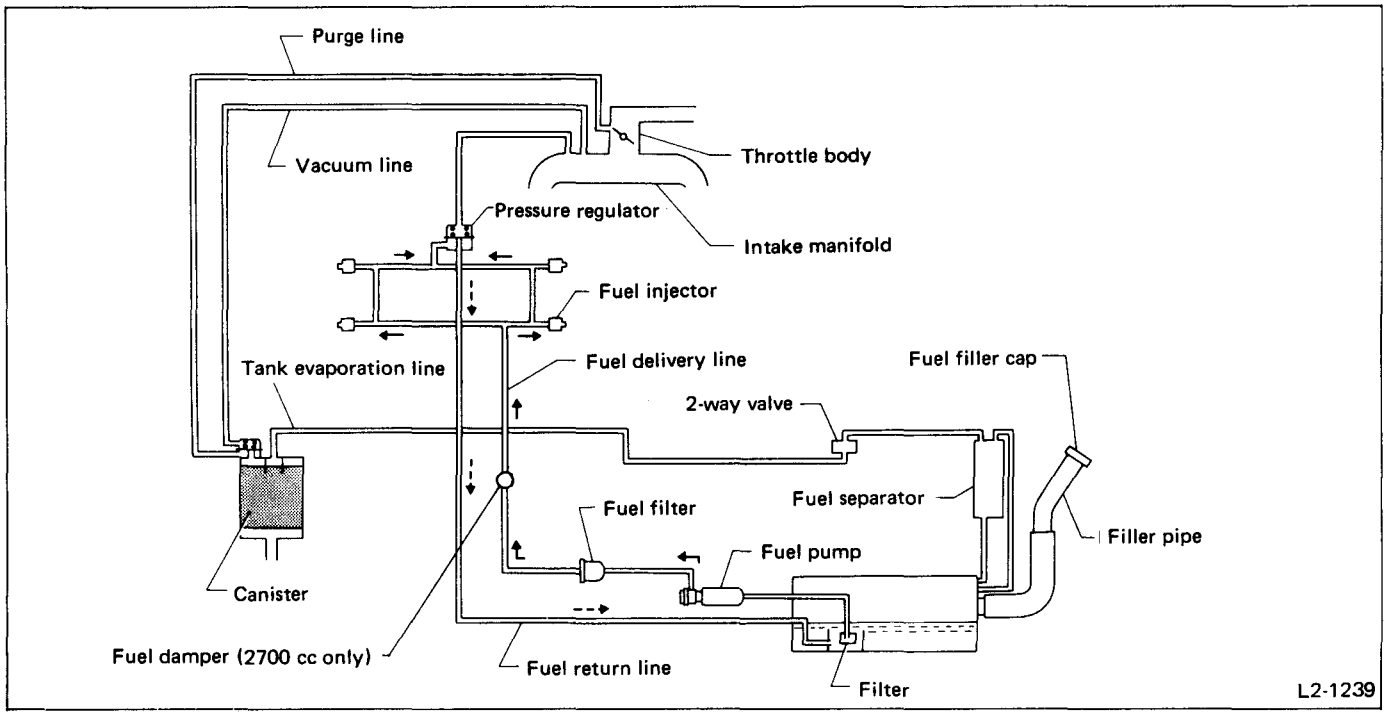

Fig. 1

Fuel Tank

It is provided with a chamber which prevents interruption of fuel flow during cornering.

SPECIFICATIONS AND SERVICE DATA

SPECIFICATIONS

Fuel tank	Capacity	60 ℓ (15.9 US gal, 13.2 Imp gal)
	Location	Under rear floor
Fuel pump	Type	Electromagnetic pin roller
	Discharge pressure	422 – 490 kPa (4.3 – 5.0 kg/cm^2, 61 – 71 psi)
	Discharge flow	95 ℓ (25.1 US gal, 20.9 Imp gal)/H min. [12 V at 299.1 kPa (3.05 kg/cm^2, 43.4 psi)]
Fuel filter		Cartridge type
Fuel separator	Capacity	1,250 mℓ (42.3 US fl oz, 44.0 Imp fl oz)

COMPONENT PARTS

Fuel Tank

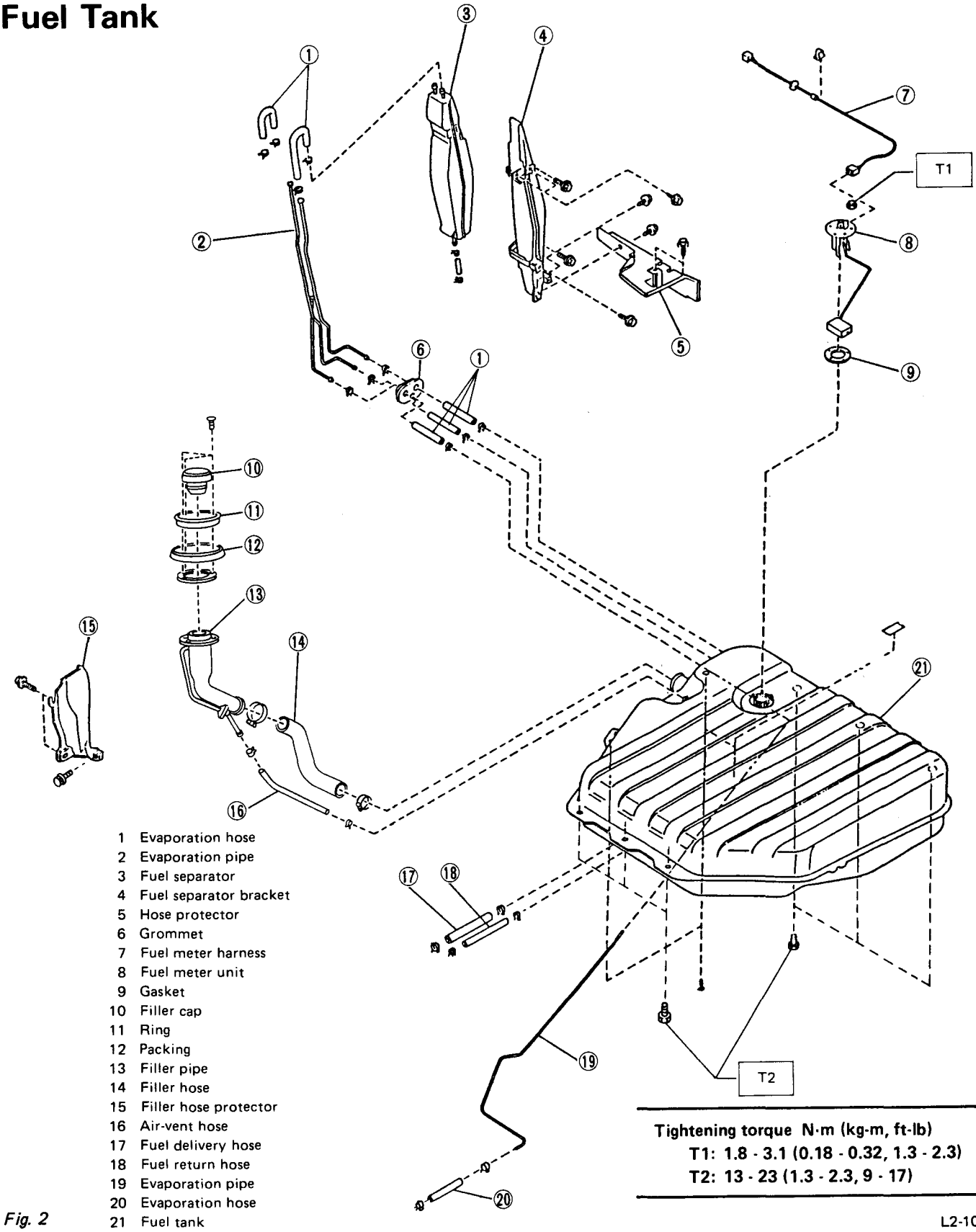

1 Evaporation hose
2 Evaporation pipe
3 Fuel separator
4 Fuel separator bracket
5 Hose protector
6 Grommet
7 Fuel meter harness
8 Fuel meter unit
9 Gasket
10 Filler cap
11 Ring
12 Packing
13 Filler pipe
14 Filler hose
15 Filler hose protector
16 Air-vent hose
17 Fuel delivery hose
18 Fuel return hose
19 Evaporation pipe
20 Evaporation hose
21 Fuel tank

Tightening torque N·m (kg-m, ft-lb)
T1: 1.8 - 3.1 (0.18 - 0.32, 1.3 - 2.3)
T2: 13 - 23 (1.3 - 2.3, 9 - 17)

Fig. 2

L2-1001

Fuel Lines

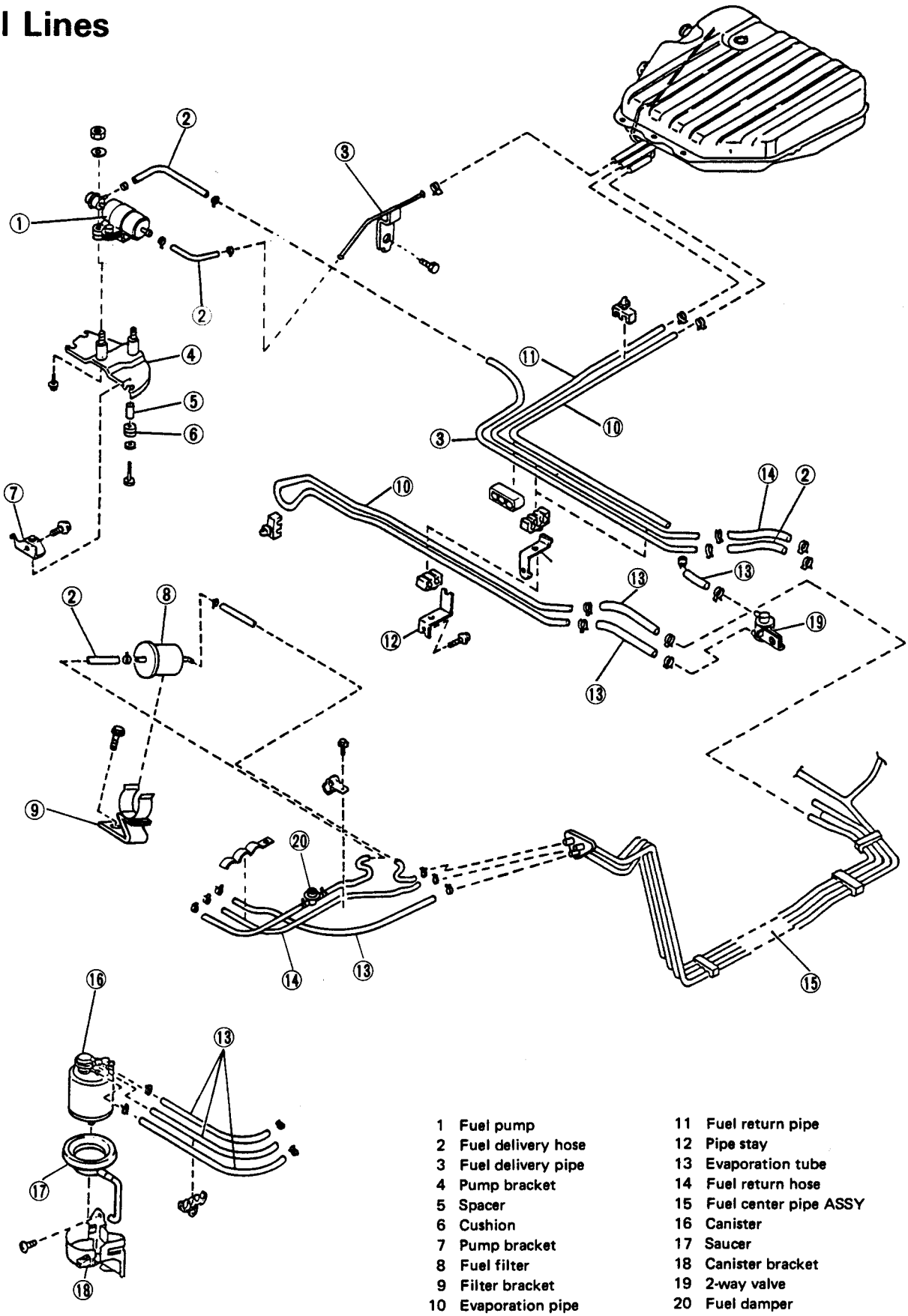

1 Fuel pump
2 Fuel delivery hose
3 Fuel delivery pipe
4 Pump bracket
5 Spacer
6 Cushion
7 Pump bracket
8 Fuel filter
9 Filter bracket
10 Evaporation pipe
11 Fuel return pipe
12 Pipe stay
13 Evaporation tube
14 Fuel return hose
15 Fuel center pipe ASSY
16 Canister
17 Saucer
18 Canister bracket
19 2-way valve
20 Fuel damper

Fig. 3

L2-1241

SERVICE PROCEDURE

a. Before starting the job, be sure to carry out the following.
1) Place "No fire" signs near the working area.
2) Disconnect ground cable from battery.
b. Be careful not to spill fuel on the floor.

Fuel Tank

REMOVAL

1) Remove muffler and rear differential ASSY. (4WD model only)
2) Remove fuel filler cap and drain fuel from fuel tank.
3) Remove fuel filler pipe protector.

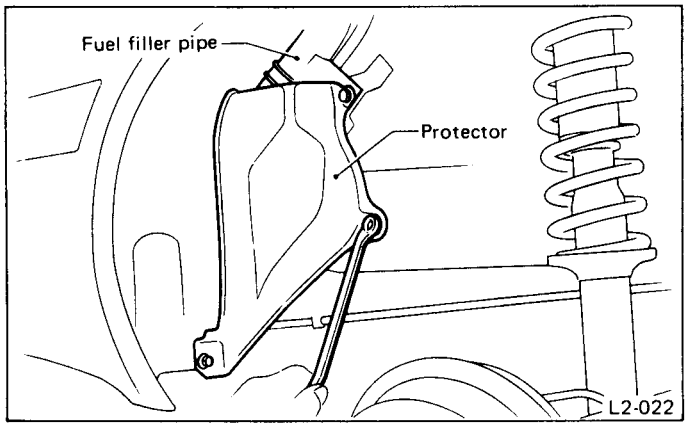

Fig. 4

4) Remove clamp and disconnect fuel filler hose from fuel filler pipe.
5) Remove clamp and disconnect air vent hose from fuel filler pipe.
6) Loosen clips and disconnect delivery hose, return hose and evaporation tube from fuel tank.

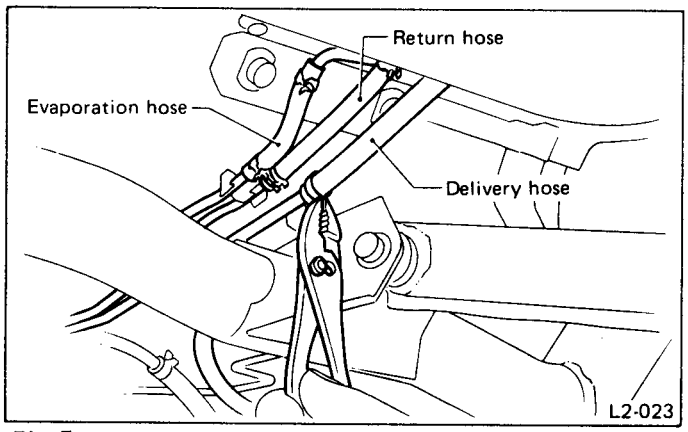

Fig. 5

7) While holding fuel tank, remove six mounting bolts from fuel tank and dismount it.

a. Two men are required to perform step 7) above.
b. Have a helper support fuel tank, as shown in the figure, when disconnecting fuel meter harness or evaporation tube.

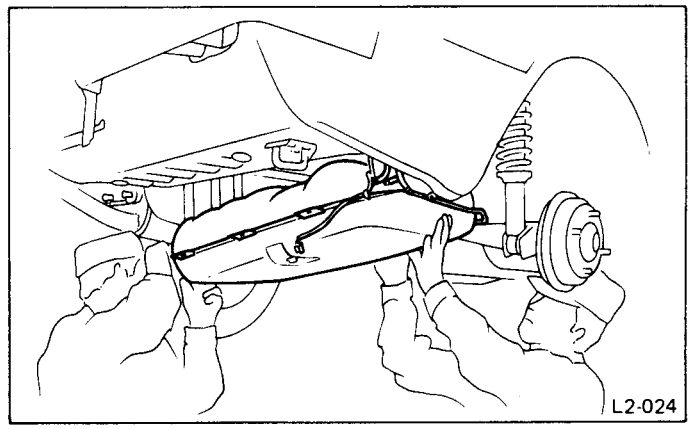

Fig. 6

8) Disconnect harness connector from fuel meter unit.
9) Loosen clips, disconnect evaporation tube, and dismount fuel tank.

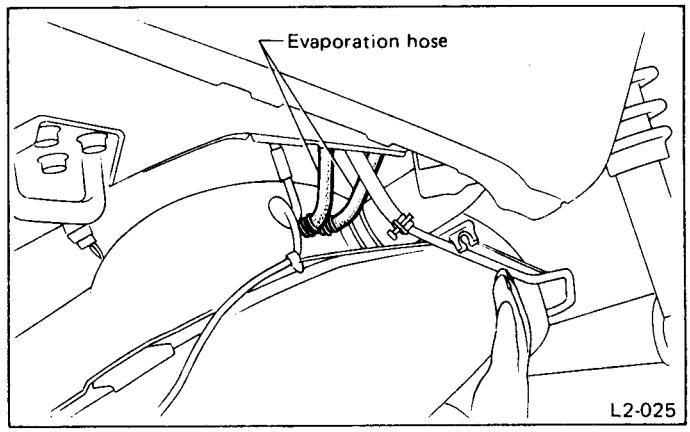

Fig. 7

INSTALLATION

Installation is in the reverse order of removal procedures. Observe the following:
1) When installing fuel tank, have a helper hold fuel tank while connecting hoses, tubes and harness connector.
2) Before tightening fuel tank mounting bolts, make sure hoses, harnesses, etc. are not caught between fuel tank and car body.

3) Install hose and tube holddown clips at positions indicated in the figure.

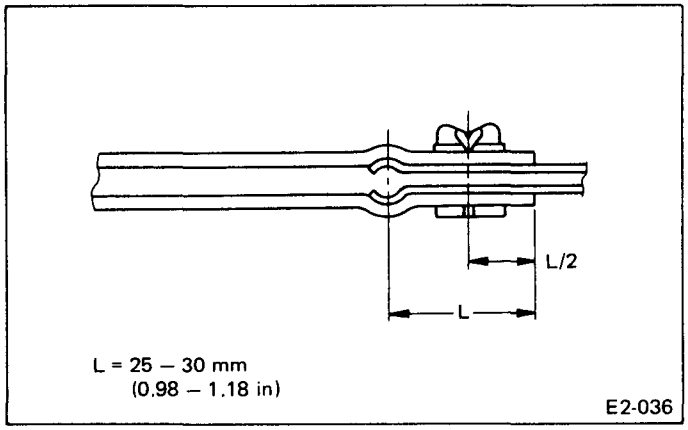

Fig. 8

Fuel Meter Unit

REMOVAL

1) Remove floor mat from luggage compartment.
2) Remove access hole lid.
3) Disconnect harness connector from fuel meter unit.

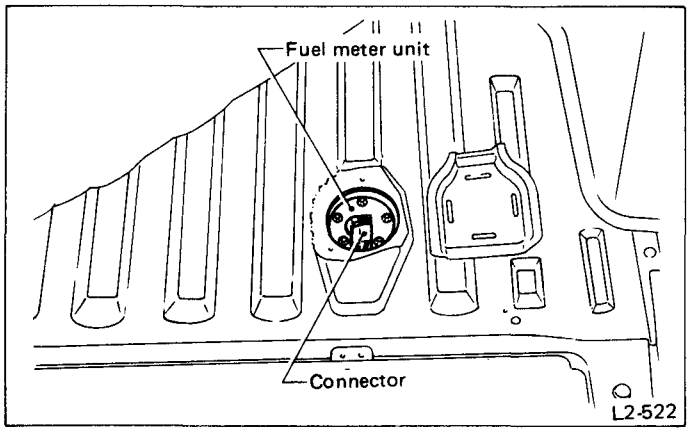

Fig. 9

4) Remove five nuts and detach fuel meter unit.

INSTALLATION

Installation is in the reverse order of removal procedures. Observe the following:

1) Be sure to alternately tighten fuel meter unit mounting nuts in a criss-cross fashion.
2) Apply a sealant to the edge of access hole lid before installation.

Fuel Filler Pipe

REMOVAL

1) Completely drain fuel from fuel tank.
2) Remove right rear tire.
3) Open fuel filler flap and remove filler cap.
4) Remove three screws holding packing in place.
5) Remove fuel filler pipe protector.
6) Remove clips and disconnect fuel filler hose and air vent hose from fuel filler pipe.

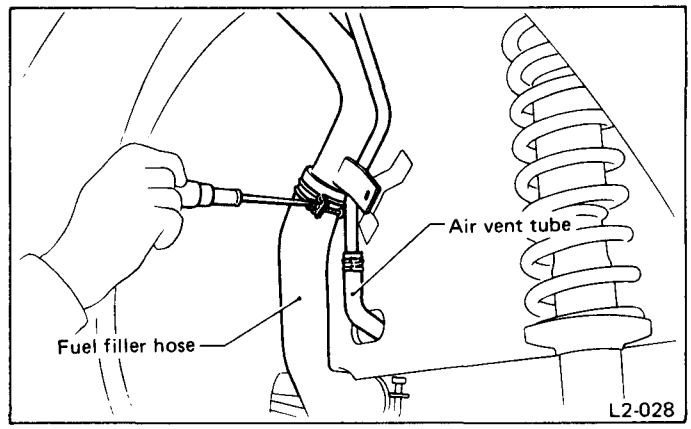

Fig. 10

7) Disconnect fuel filler pipe from underside of car.

INSTALLATION

1) Hold fuel filler flap open.
2) Insert fuel filler pipe into hole in fuel saucer from the inner side of apron. Align holes in fuel filler pipe neck and packing and tighten screws.

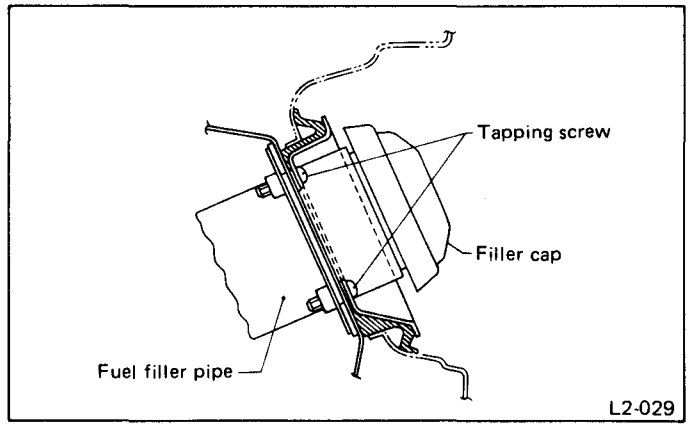

Fig. 11

3) If edges of rubber packing are folded toward the inside, straighten it with a standard screwdriver.
4) Insert fuel filler hose approximately 25 to 35 mm (0.98 to 1.18 in) over the lower end of fuel filler pipe and tighten clamps. Do not allow clips to touch protector and air vent pipe.
5) Insert air vent hose approximately 25 to 30 mm (0.98 to 1.18 in) into the lower end of air vent pipe and tighten with clips, as shown in figure.

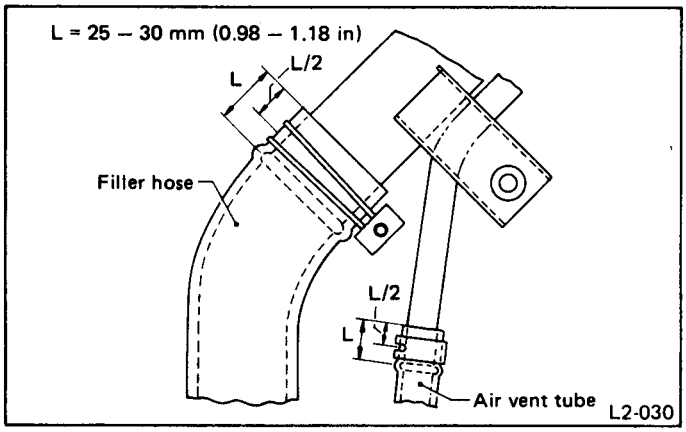

Fig. 12

6) Install protector together with fuel filler pipe. Check to be sure clamp for filler hose and clip for air vent hose do not touch apron.

Fuel Separator

REMOVAL

1) Remove right trim from luggage compartment.
2) Remove hose protector.
3) Remove fuel separator and bracket as a unit. Be sure not to scratch the inner side of car body.
4) Disconnect evaporation tube from pipe held to bracket.

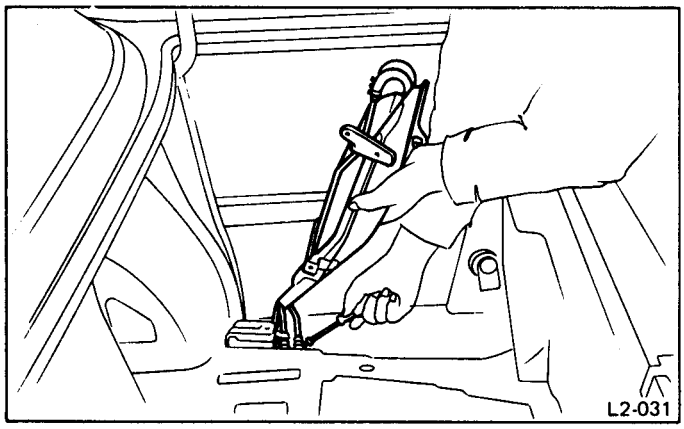

Fig. 13

5) Remove fuel separator from bracket.
6) Disconnect tube from fuel separator.

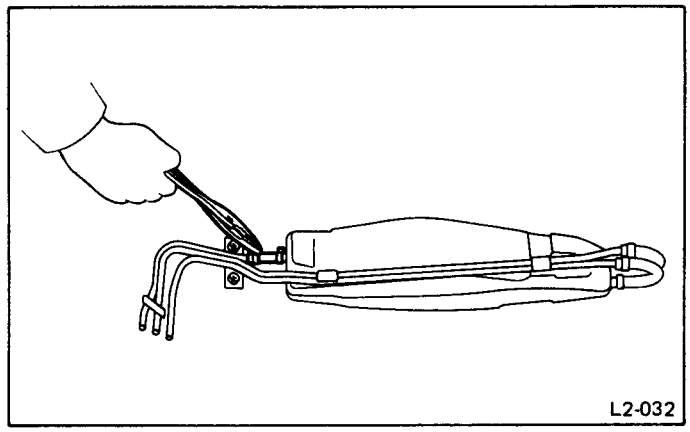

Fig. 14

INSTALLATION

Installation is in the reverse order of removal procedures. Observe the following:
1) When connecting tube between fuel separator and pipe, insert until it butts up against nipple on the separator side, and insert the other end up to the marked position on the pipe side.
2) Install fuel separator on bracket such that the pipe can run through the hollowed section of separator.

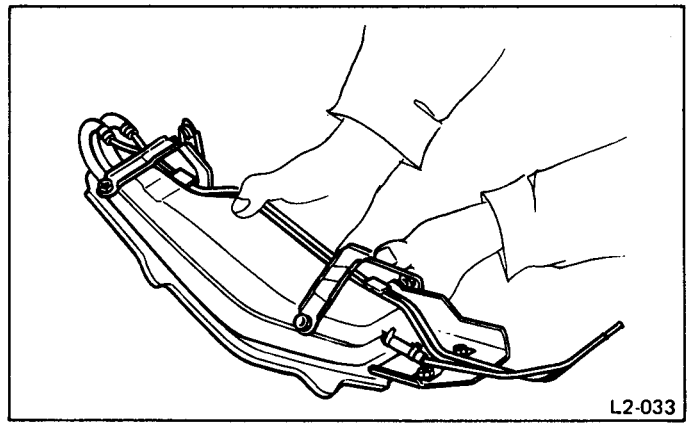

Fig. 15

3) Be sure to insert evaporation tube approximately 15 to 20 mm (0.59 to 0.79 in) into pipe on bracket. Install clips in a direction which does not touch other tubes.

Fuel Filter

REMOVAL

1) The fuel system is pressurized. Before removing the hose, filter, pump, etc., be sure to release the fuel pressure, as follows:
   (1) Disconnect the wiring connector of the fuel pump.
   (2) Crank the engine for more than five seconds.
   If the engine starts, let the engine run until it stops.
   (3) After turning IG switch to OFF, connect the wiring connector of the fuel pump.
2) Loosen the screw of the hose clamp and pull off the hose from the filter.
3) Remove the filter from the holder.

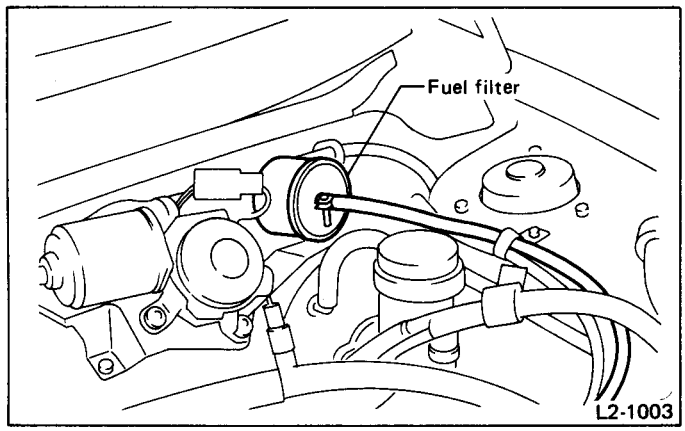

Fig. 16

INSTALLATION

1) Connect the hose as illustrated below:

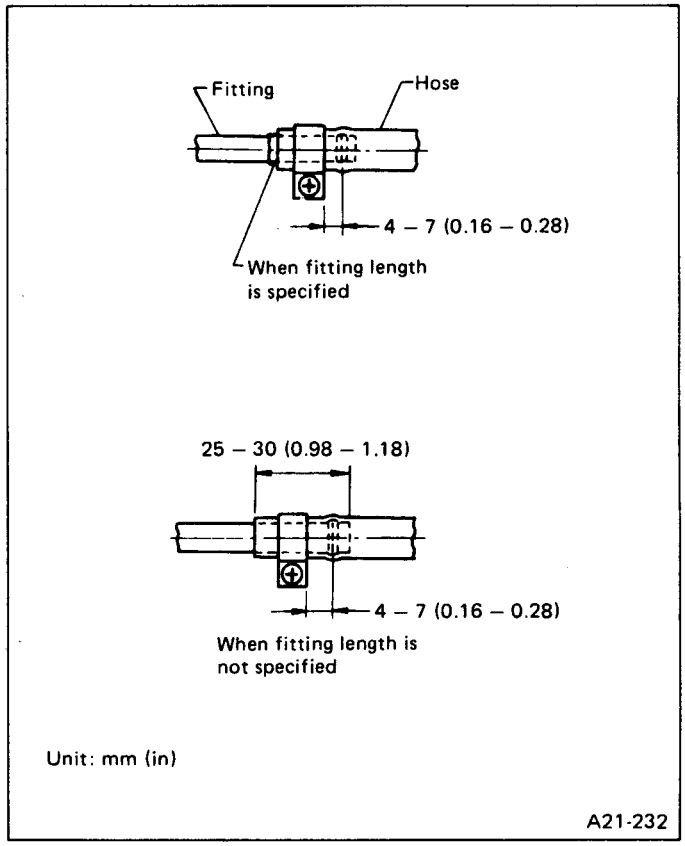

Fig. 17

2) Tighten the hose clamp screw to the specified torque.

Tightening torque:
1.0 - 1.5 N·m (0.1 - 0.15 kg-m, 0.7 - 1.1 ft-lb)

3) If the hose is damaged at the clamping portion, replace the hose with a new one.
4) If the hose clamp is too deformed, replace with a new one.
5) Fit the hose to the filter, then install the filter to the holder. Correct the hose position by removing any twist so that it will not interfere with the filter body or washer tank, before tightening the screw of the hose clamp.

INSPECTION

1) Check the inside of the filter for dirt and water sediment.
2) If the filter is clogged or cracked, or if the replacement interval has been reached, replace the filter.
3) If water is found in the filter, shake the filter with its inlet port facing down, to expel the water.

Fuel Pump

REMOVAL

1) Release the pressure of the fuel system.

Refer to "REMOVAL 1)" in Fuel Filter.

2) Keep the pump harness connector disconnected.
3) Jack up the vehicle.
4) Clamp the middle portion of the thick hose connecting the pipe (coupling) and pump. Prevent the fuel from flowing out of the fuel tank.

Do not bend the hose sharply; otherwise, it may be damaged.

5) Loosen the hose clamp, and disconnect the hose.
6) Remove three pump bracket mounting bolts, and remove the pump together with the pump damper.

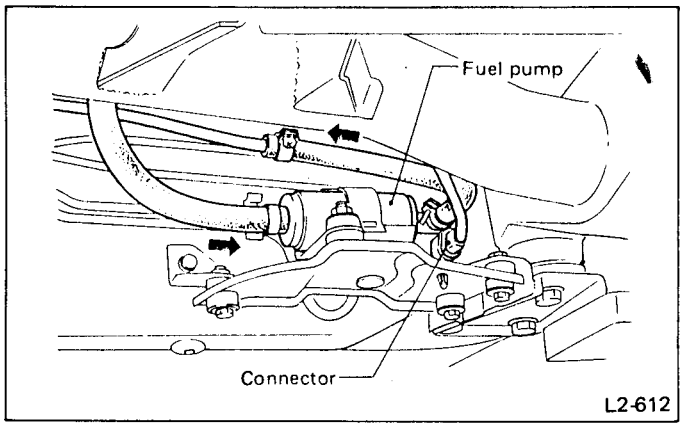

Fig. 18

INSPECTION

1) Connect the leads to the harness connector, and apply a 12-volt power supply to check whether the pump operates.

a. Keep the battery apart from the pump as far as possible.
b. Be sure to turn the 12 V supply ON and OFF on the battery side.
c. Do not run the pump for a long time under non-loaded condition.

INSTALLATION

1) If the pump and damper have been removed from the pump bracket, tighten the mounting bolts to the specified torque.
2) Install the hose using the same procedure as that explained in "Fuel Filter".
3) Install the pump bracket in position to the vehicle body, and secure it with bolts.

Use care not to drop the spacer of the cushion rubber.

4) Install the hose.
5) Connect the pump harness connector.
6) Run the pump and check for fuel leaks.

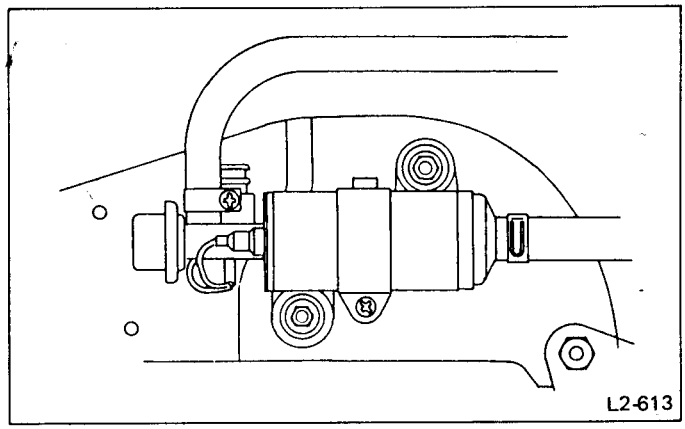

Fig. 19

Fuel Delivery, Return and Evaporation Lines

REMOVAL

1) Under body floor, detach fuel delivery hoses, return hoses, evaporation tubes and 2-way valves.

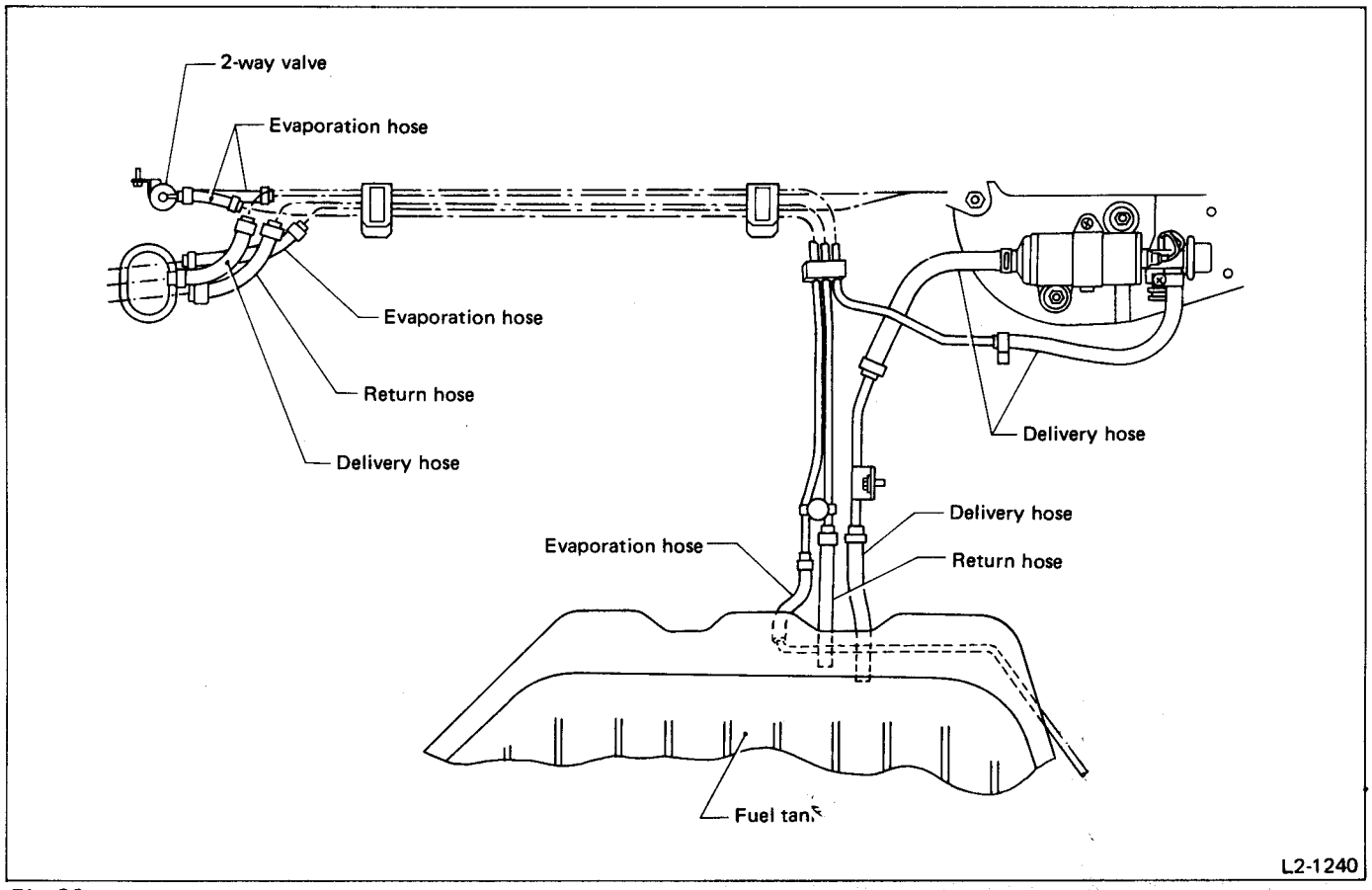

Fig. 20

2) In engine compartment, detach fuel delivery hoses, return hoses, evaporation tubes and canister.

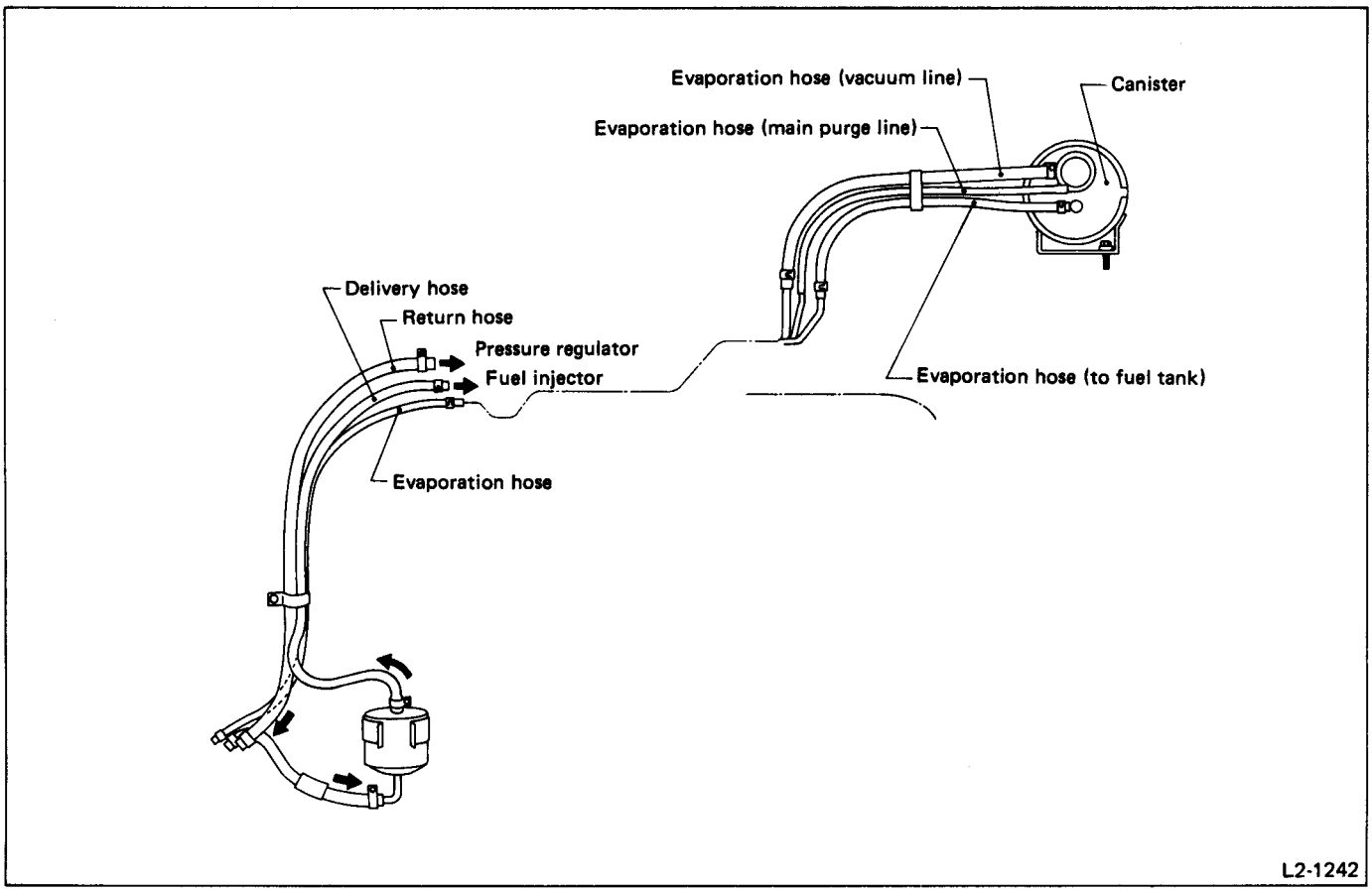

Fig. 21

INSTALLATION

Install in the reverse order of removal.

1) Connect delivery hose to delivery pipe with an overlap of 25 to 30 mm (0.98 to 1.18 in).

2) Connect delivery hoses and fuel return hose to fuel tank, fuel pump and fuel filter until they reach the base of each pipe.

3) Insert evaporation tube into evaporation pipe by approx. 15 mm (0.59 in) and position a clip with approx. 8 mm (0.31 in) from hose end.

4) When installing 2-way valve, install it with its "TO ENGINE" mark facing downward.

5) Be sure to inspect hoses and their connections for any leakage of fuel.

TROUBLESHOOTING

	Trouble and possible cause	Corrective action
1. Insufficient fuel supply to the injector		
1)	Fuel pump will not operate.	
	○ Defective terminal contact.	Inspect connections, especially ground, and tighten securely.
	○ Trouble in electromagnetic or electronic circuit parts.	Replace fuel pump.
2)	Lowering of fuel pump function.	Replace fuel pump.
3)	Clogged dust or water in the fuel filter.	Replace fuel filter, clean or replace fuel tank.
4)	Clogged or bent fuel pipe or hose.	Clean, correct or replace fuel pipe or hose.
5)	Air is mixed in the fuel system.	Inspect or retighten each connection part.
6)	Clogged or bent air breather tube or pipe.	Clean, correct or replace air breather tube or pipe.
7)	Fuel damper will not operate.	Replace.
8)	Damaged diaphragm of pressure regulator.	Replace.
2. Leakage or blow out fuel		
1)	Loosened joints of the fuel pipe.	Retightening.
2)	Cracked fuel pipe, hose and fuel tank.	Replace.
3)	Defective welding part on the fuel tank.	Replace.
4)	Defective drain packing of the fuel tank.	Replace.
5)	Clogged or bent air breather tube or air vent tube.	Clean, correct or replace air breather tube or air vent tube.
3. Gasoline is smelling inside of compartment		
1)	Loosened joints at air breather tube, air bent tube and fuel filler pipe.	Retightening.
2)	Defective packing air tighteness on the fuel saucer.	Correct or replace packing.
3)	Cracked fuel separator.	Replace separator.
4. Defective fuel meter indicator		
1)	Defective operation of fuel meter unit.	Replace.
2)	Defective operation of fuel meter.	Replace.
5. Noise		
1)	Large operation noise or vibration of fuel pump.	Replace.

a. When the vehicle is left unattended for an extended period of time.
1) Water may accumulate in the fuel tank. To prevent water condensation, top off the fuel tank or drain the fuel completely.
2) Also drain water condensation from the fuel filter.

b. Refilling the fuel tank.
   1) Refill the fuel tank while there is still some fuel left in the tank.
c. Protecting the fuel system against freezing and water condensation.
   1) Cold areas
   In snow-covered areas, mountainous areas, skiing areas, etc. where ambient temperatures drop below 0°C (32°F), throughout the winter season, use an anti-freeze solution in the cooling system.
   Refueling will also complement the effect of anti-freeze solution each time the fuel level drops to about one-half.
   After the winter season, drain water which may have accumulated in the fuel filter and fuel tank in the manner same as that described under the Moderate Areas.
   2) Moderate areas
   When water condensation is noticed in the fuel filter, drain water from both the fuel filter and fuel tank or use a water removing agent (or anti-freeze solution) in the fuel tank.
   - Observe the instructions, notes, etc., indicated on the label affixed to the anti-freeze solution (water removing agent) container before use.

EXHAUST SYSTEM

2-9

SUBARU

1988

Page

COMPONENT PARTS 2
SERVICE PROCEDURE 4
- Front Exhaust Pipe 4
- Rear Exhaust Pipe 5
- Muffler Assembly 6
- Tail Pipe Cutter 7

COMPONENT PARTS

1800 cc model

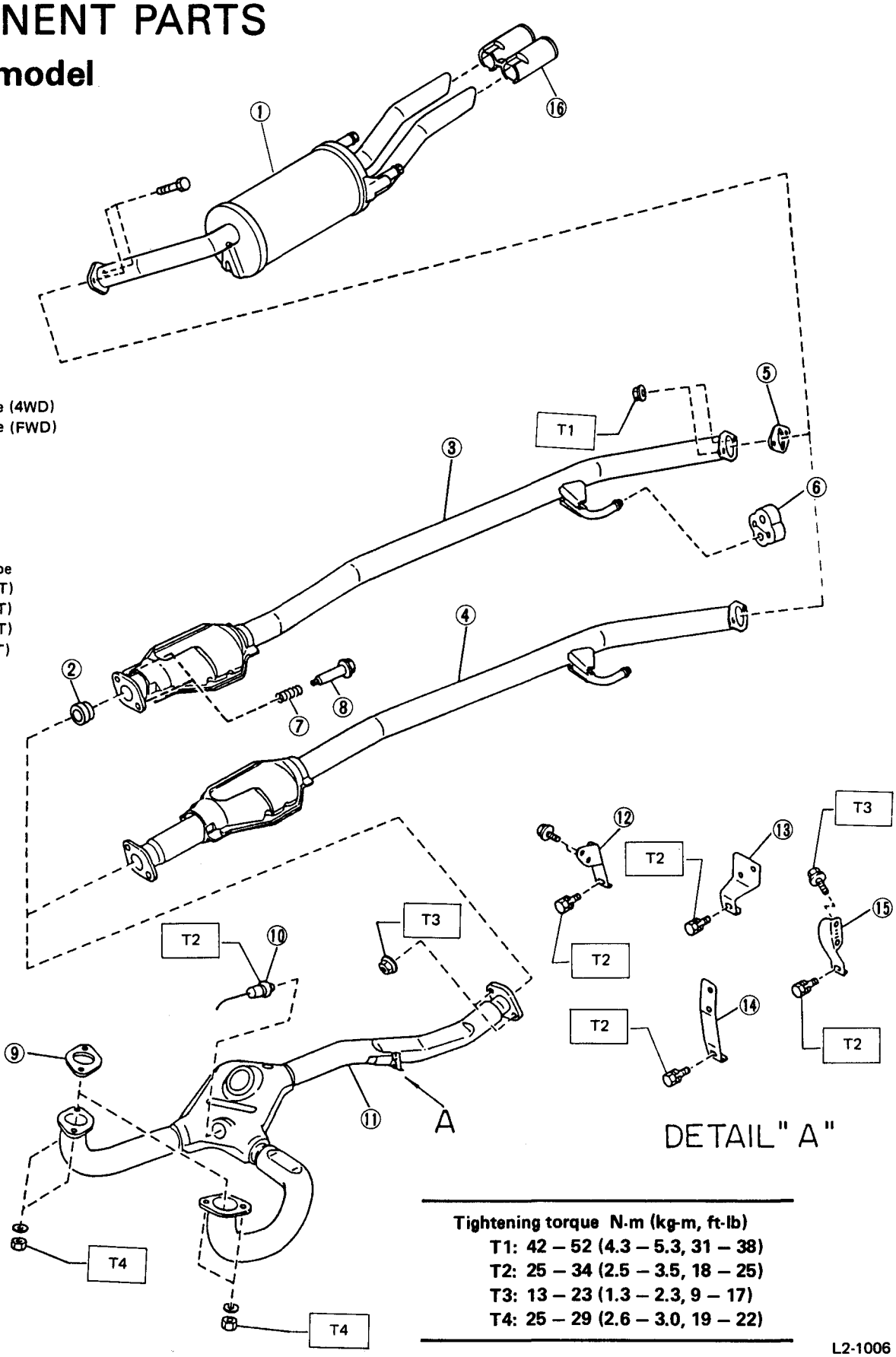

1 Muffler ASSY
2 Gasket
3 Rear exhaust pipe (4WD)
4 Rear exhaust pipe (FWD)
5 Gasket
6 Cushion
7 Spring
8 Boit
9 Gasket
10 O_2 sensor
11 Front exhaust pipe
12 Bracket (FWD MT)
13 Bracket (4WD MT)
14 Bracket (FWD AT)
15 Bracket (4WD AT)
16 Tail pipe cutter

Tightening torque N·m (kg-m, ft-lb)
T1: 42 – 52 (4.3 – 5.3, 31 – 38)
T2: 25 – 34 (2.5 – 3.5, 18 – 25)
T3: 13 – 23 (1.3 – 2.3, 9 – 17)
T4: 25 – 29 (2.6 – 3.0, 19 – 22)

Fig. 1

L2-1006

2700 cc model

Tightening torque: N·m (kg-m, ft-lb)
T1: 42 – 52 (4.3 – 5.3, 31 – 38)
T2: 25 – 34 (2.5 – 3.5, 18 – 25)
T3: 13 – 23 (1.3 – 2.3, 9 – 17)
T4: 25 – 29 (2.6 – 3.0, 19 – 22)

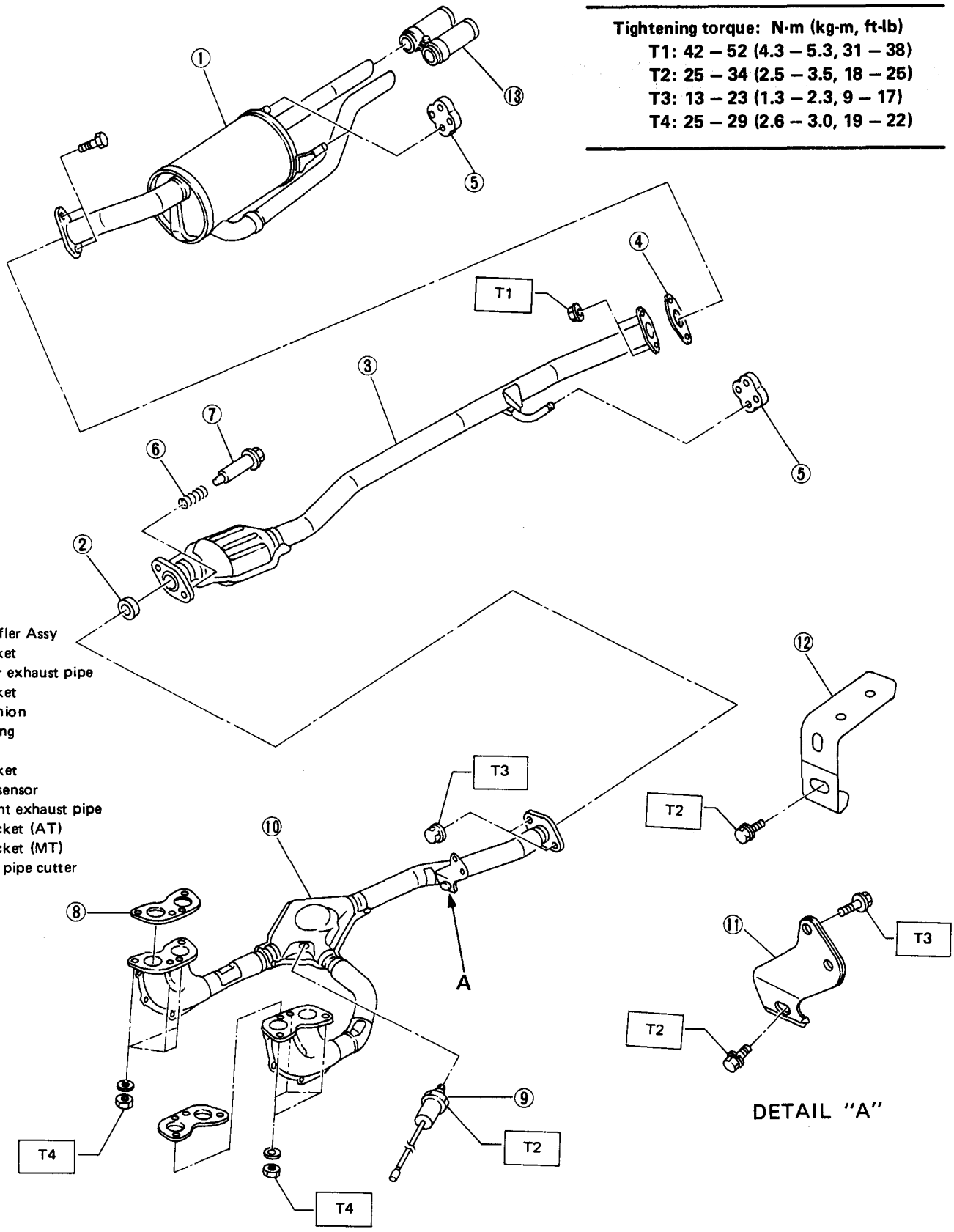

1 Muffler Assy
2 Gasket
3 Rear exhaust pipe
4 Gasket
5 Cushion
6 Spring
7 Bolt
8 Gasket
9 O_2 sensor
10 Front exhaust pipe
11 Bracket (AT)
12 Bracket (MT)
13 Tail pipe cutter

Fig. 2

L2-1234

SERVICE PROCEDURE

Front Exhaust Pipe

REMOVAL

1) Disconnect O_2 sensor harness.
2) Loosen (do not remove) nuts which hold front exhaust pipe to exhaust port of engine.
3) Disconnect front and rear exhaust pipes.
4) Disconnect front exhaust pipe and bracket.
5) While holding front exhaust pipe with one hand, remove nuts which hold front exhaust pipe to exhaust port. Front exhaust pipe can then be disconnected.

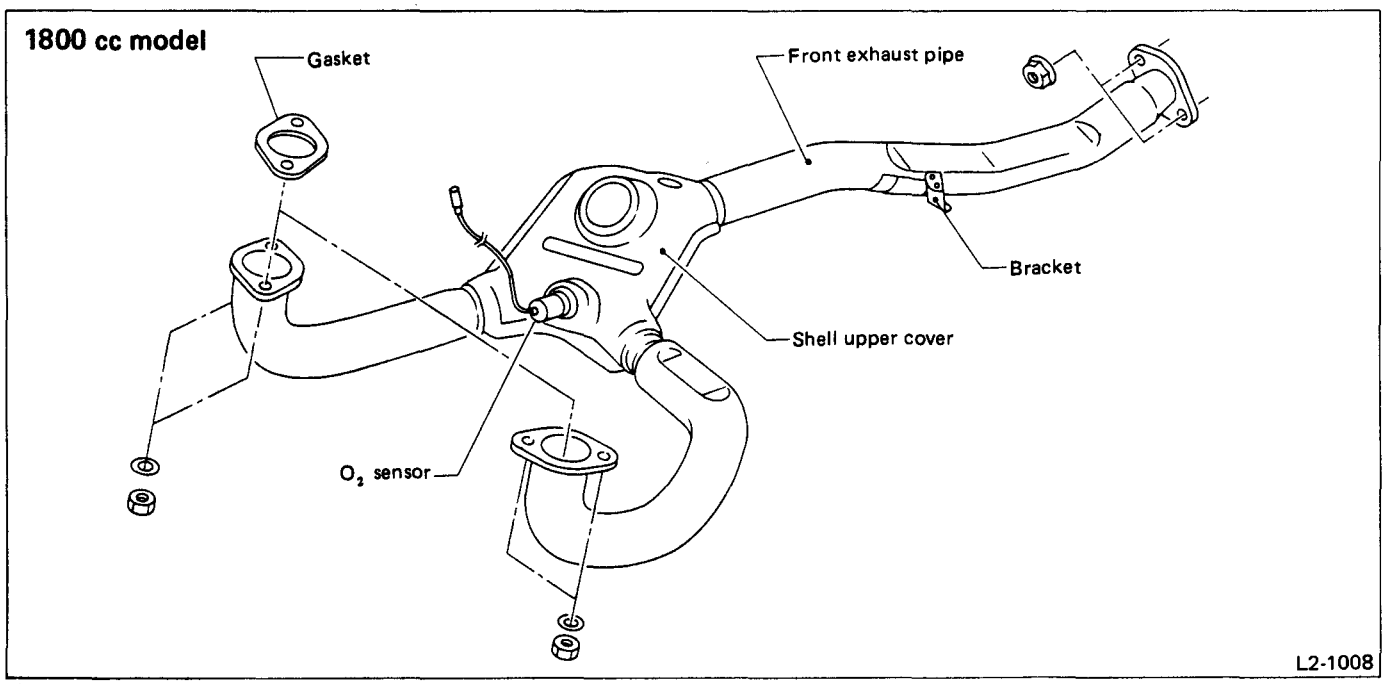

Fig. 3

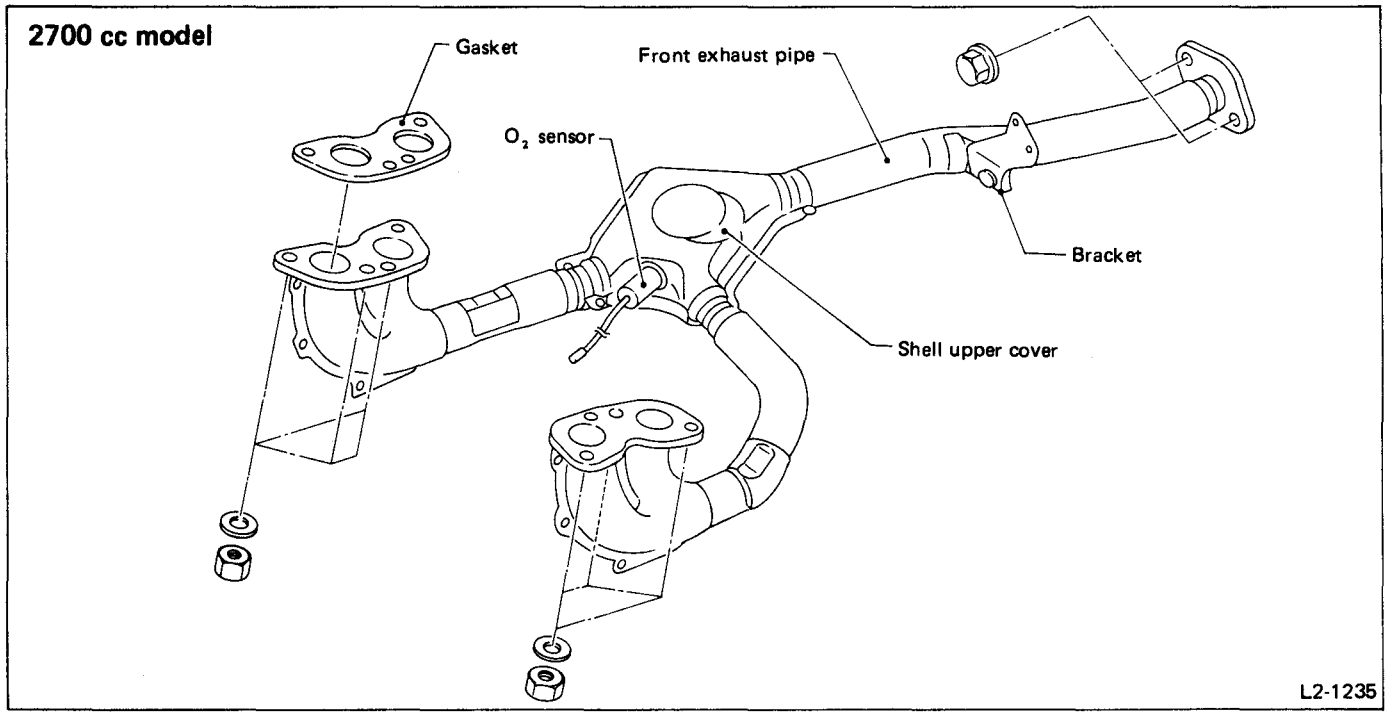

Fig. 4

INSTALLATION

Installation is in the reverse order of removal procedures. Observe the following:

1) Be sure to install a new gasket at exhaust port.
2) Use only nuts specified by the manufacturer.
3) Do not remove gasket placed between front and rear exhaust pipes. When front exhaust pipe needs to be replaced, gasket must be also replaced.

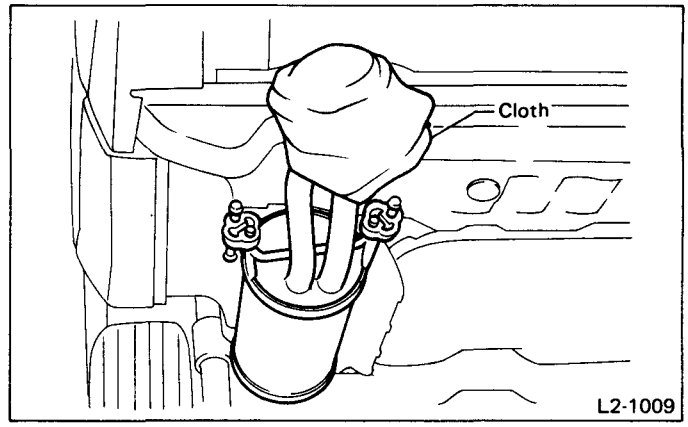

Fig. 6

3) Remove rear exhaust pipe from rubber cushion. To facilitate its removal, apply a coat of SUBARU CRC5-56 (004301003) to it in advance.

Rear Exhaust Pipe

REMOVAL

1) Disconnect rear exhaust pipe from front exhaust pipe.

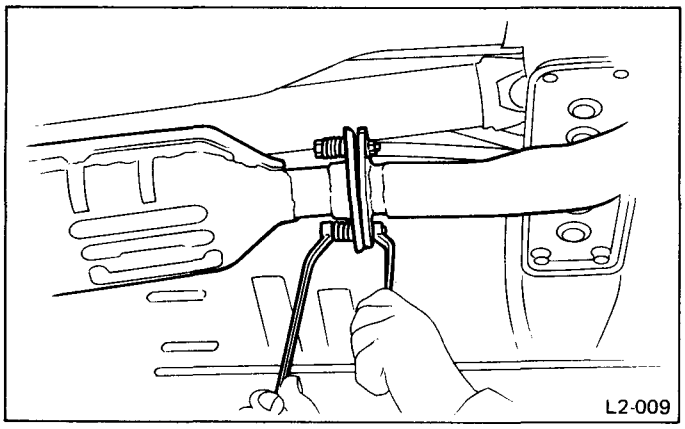

Fig. 5

2) Disconnect rear exhaust pipe from muffler ASSY. To prevent damaging bumper or rear skirt by muffler, wrap a cloth around tail pipe.

INSTALLATION

1) Temporarily connect rear exhaust pipe and muffler ASSY.
2) Temporarily connect rear exhaust pipe and front exhaust pipe.
3) Insert exhaust pipe bracket into rubber cushion. To facilitate insertion, apply a coat of SUBARU CRC5-56 (004301003) to the mating area of rubber cushion in advance.
4) Adjust clearances between temporarily installed parts and tighten to specified torque.

Be sure to install bolts, springs, and self-locking nuts in the order indicated in the figure. Always install new self-locking nuts.

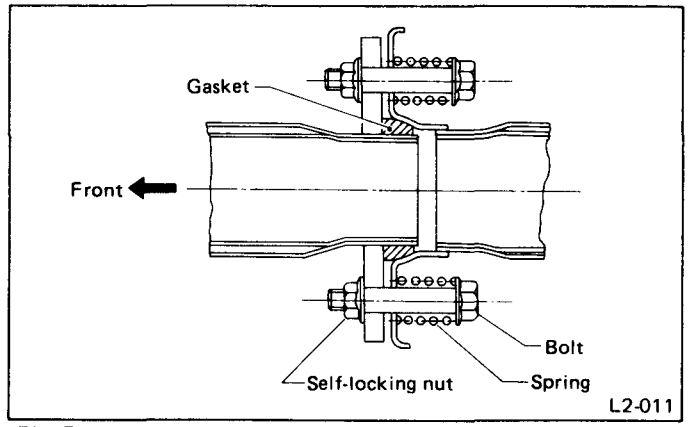

Fig. 7

Muffler Assembly

REMOVAL

1) Remove bolts and self-locking nuts which hold rear exhaust pipe to muffler ASSY to prevent damage to bumper or rear skirt by muffler wrap a cloth around tail pipe.
2) Remove left and right rubber cushions from muffler ASSY, and detach muffler ASSY.

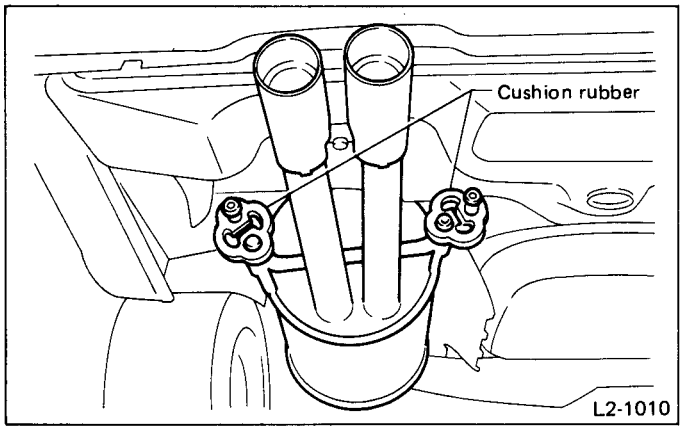

Fig. 8

INSTALLATION

Installation is in the reverse order of removal procedures.

Be sure to install new self-locking nuts and gaskets.

Exhaust System

ADJUSTMENT

1) After installing exhaust system parts, check to make sure clearances between parts and car body are larger than specified values.
2) If any clearance is not, loosen all connections.
3) Adjust where necessary to obtain proper clearance.
4) Tighten all connections to specified torque.

1800 cc model

Unit: mm (in)

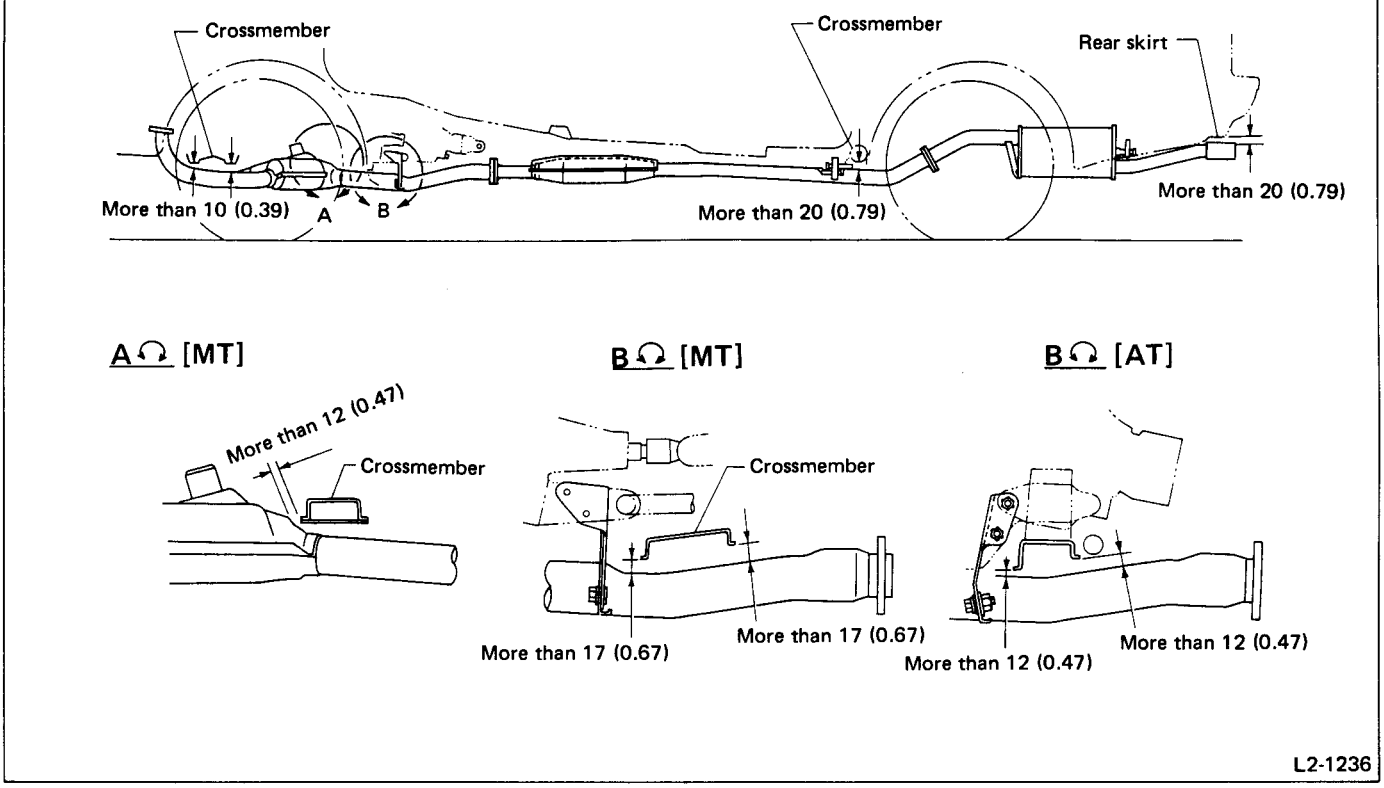

Fig. 9

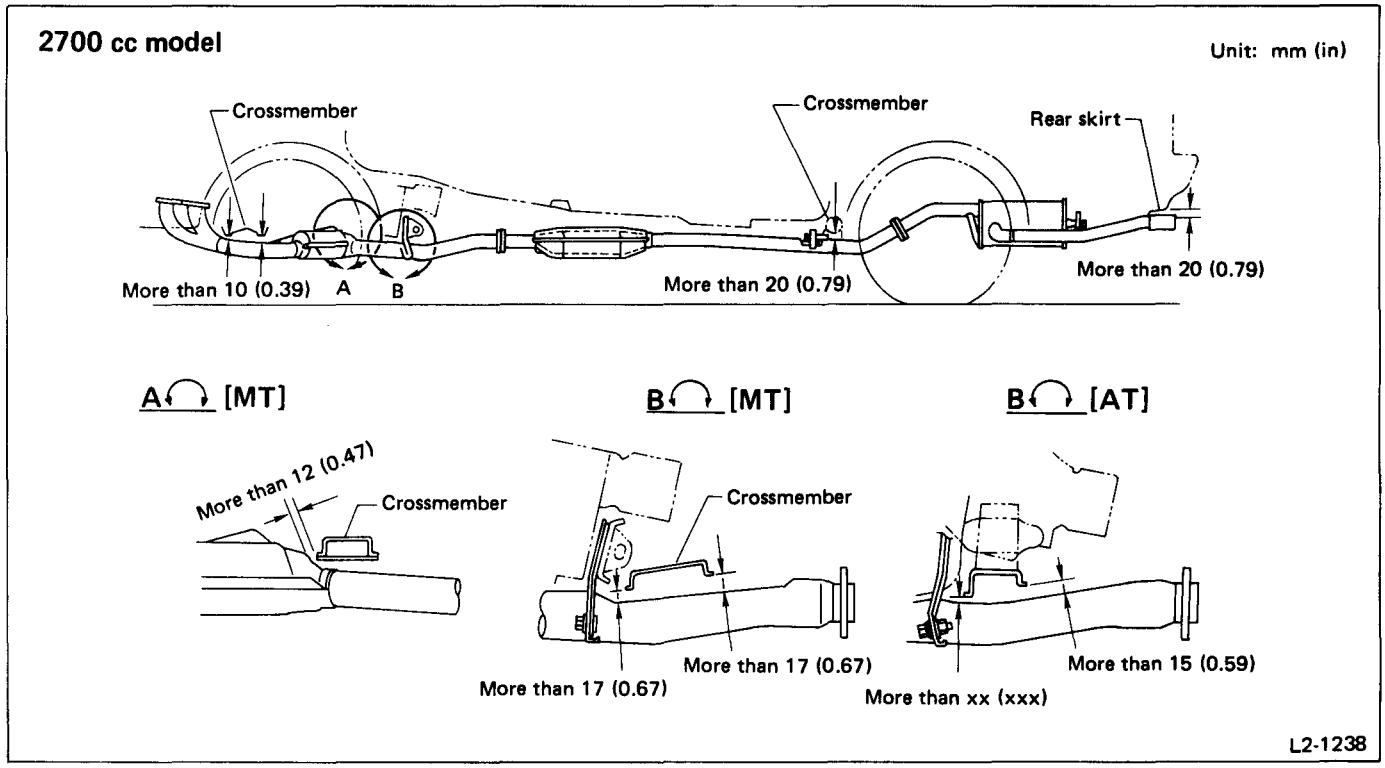

Fig. 10

Tail Pipe Cutter

REMOVAL

Loosen clamp bolt and remove tail pipe cutter from tail pipe.

INSTALLATION

1) Put tail pipe cutter onto tail pipe until it touches a projection.

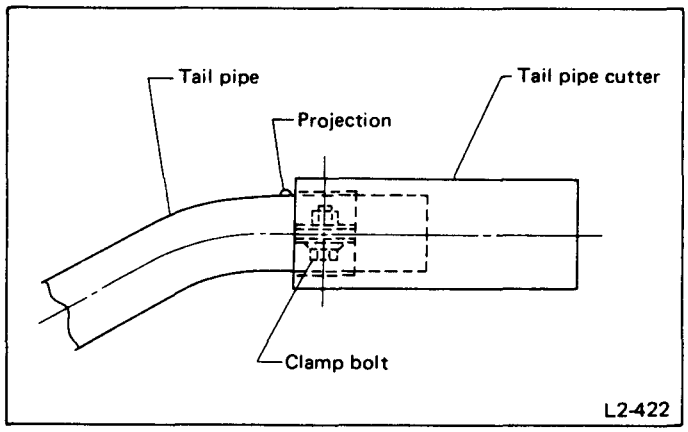

Fig. 11

2) Tighten clamp bolt to specified torque.

Tightening torque:
29 – 39 N·m (3.0 – 4.0 kg-m, 22 – 29 ft-lb)

Be sure there is at least 25 mm (0.98 in) of clearance between rear skirt and tail pipe.

CLUTCH

2-10

SUBARU

1988

	Page
MECHANISM AND FUNCTION	2
SPECIFICATIONS AND SERVICE DATA	3
COMPONENT PARTS	4
SERVICE PROCEDURE	5
TROUBLESHOOTING	10

MECHANISM AND FUNCTION

Cross Sectional View

FWD

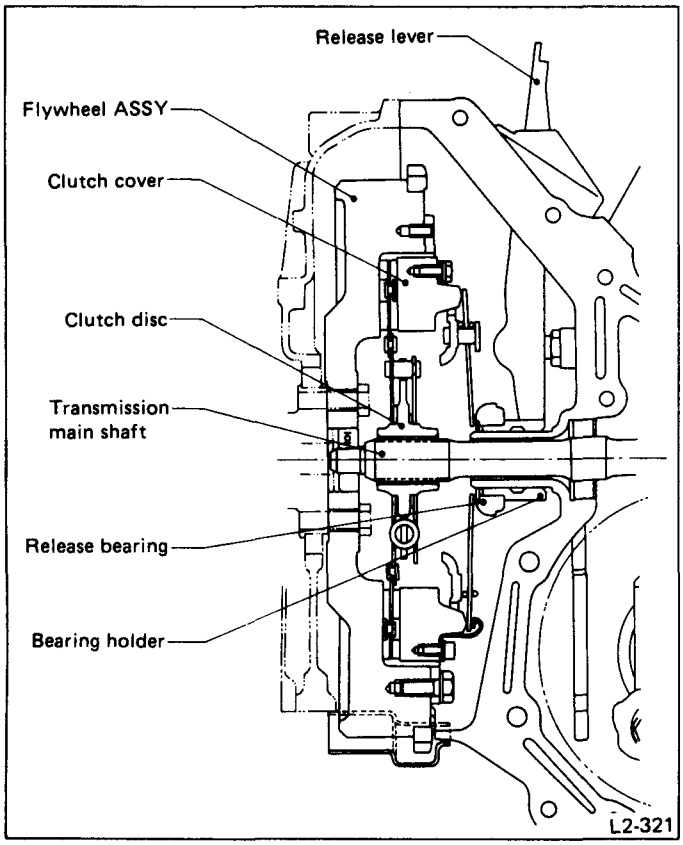

Fig. 1

4WD

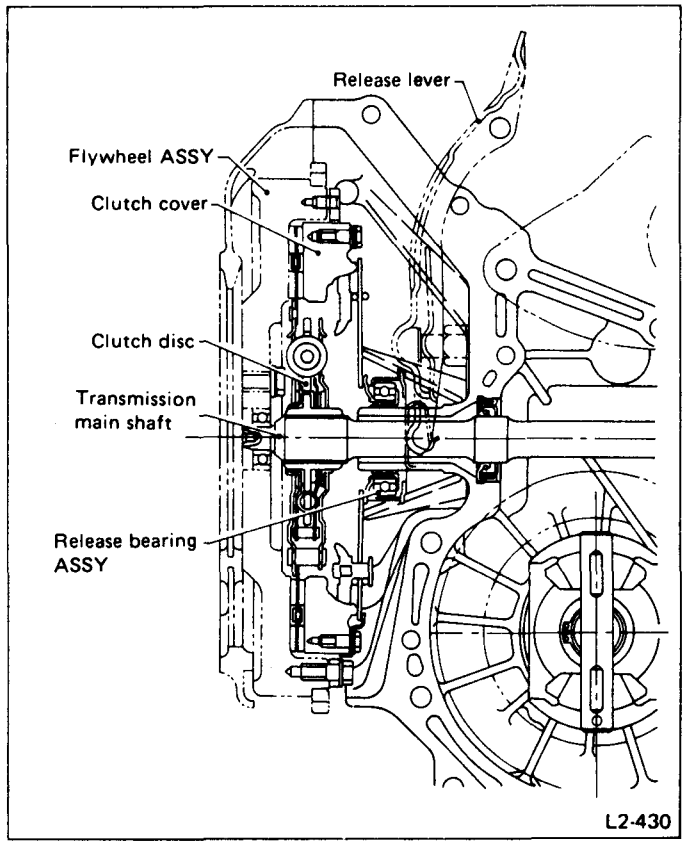

Fig. 2

SPECIFICATIONS AND SERVICE DATA

SPECIFICATIONS

Item \ Model			FWD	4WD
Clutch cover	O.D.	mm (in)	244 (9.61)	266 (10.47)
	Thickness	mm (in)	5 (0.20)	6 (0.24)
	Pressure plate O.D.	mm (in)	202 (7.95)	228 (8.98)
	Pressure plate I.D.	mm (in)	128 (5.04)	147 (5.79)
	Diaphragm set load	kg (lb)	350 (772)	1800 cc 350 (772) 2700 cc 500 (1,103)
Clutch disc	Facing material		Woven	Woven
	O.D. x I.D. x thickness	mm (in)	200 x 130 x 3.5 (7.87 x 5.12 x 0.138)	225 x 150 x 3.5 (8.86 x 5.91 x 0.138)
	Spline O.D. (No. of teeth)	mm (in)	23.2 (0.913) (23)	25.2 (0.992) (25)
Clutch release lever ratio			2.0	3.0
Release bearing			Grease-packed ball bearing	Grease-packed self-aligning

SERVICE DATA

Clutch pedal	Full stroke	mm (in)	138 – 152 (5.43 – 5.98)
Release lever	Stroke	mm (in) FWD 4WD	 17 – 18 (0.67 – 0.71) 25.5 – 27 (1.004 – 1.063)
	Play at release lever center	mm (in) FWD 4WD	 2 – 3 (0.08 – 0.12) 3 – 4 (0.12 – 0.16)
Clutch disc	Depth of rivet head	mm (in) Standard Limit of sinking	 1.4 (0.055) 0.3 (0.012)
	Limit for deflection	mm (in)	0.7 (0.028) at R = 95 (3.74) . . . . FWD R = 107 (4.21) 4WD

COMPONENT PARTS

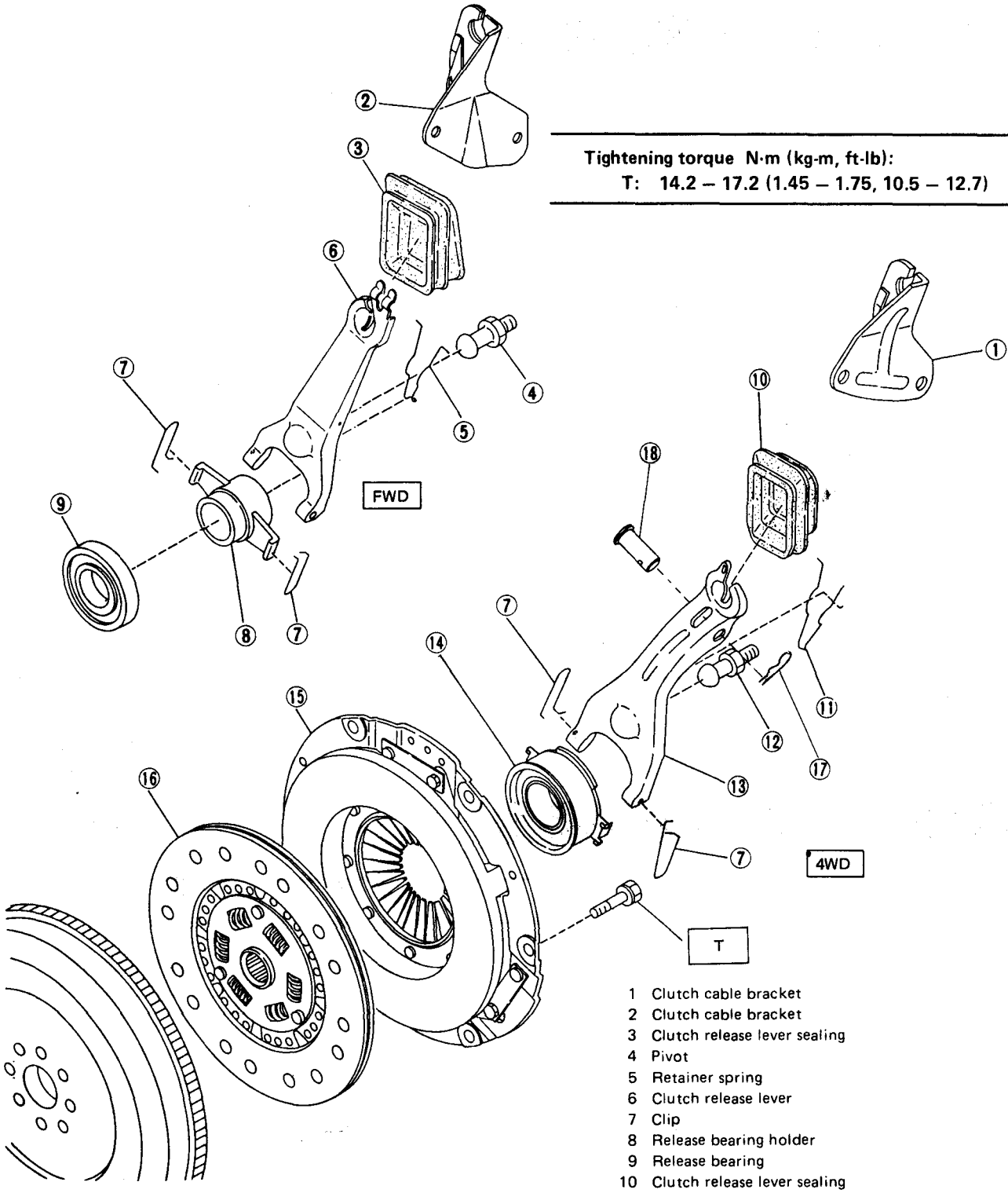

Tightening torque N·m (kg-m, ft-lb):
T: 14.2 – 17.2 (1.45 – 1.75, 10.5 – 12.7)

1 Clutch cable bracket
2 Clutch cable bracket
3 Clutch release lever sealing
4 Pivot
5 Retainer spring
6 Clutch release lever
7 Clip
8 Release bearing holder
9 Release bearing
10 Clutch release lever sealing
11 Retainer spring
12 Pivot
13 Clutch release lever
14 Clutch release bearing ASSY
15 Clutch cover
16 Clutch disc
17 Snap ring
18 PHV cable pin

Fig. 3 L2-571

SERVICE PROCEDURE

ON-CAR SERVICE

CLUTCH CONTROL

Clutch Play Adjustment

1) Remove release lever return spring from lever.
2) Adjust spherical nut so that the play is within the specified value at the lever end (center of spherical nut).

Take care not to twist the cable during adjustment.

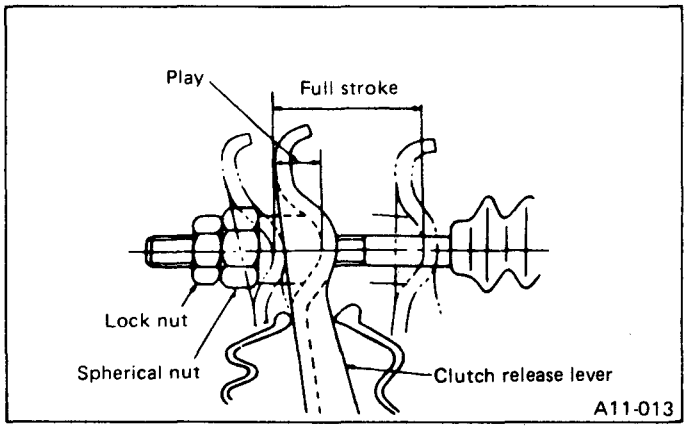

Fig. 4

Unit: mm (in)

	Play	Full stroke
FWD	2 – 3 (0.08 – 0.12)	17 – 18 (0.67 – 0.71)
4WD	3 – 4 (0.12 – 0.16)	25.5 – 27 (1.004 – 1.063)

Check

1) Upon completion of adjustment, securely lock spherical nut with lock nut.
2) Install return spring on lever.

Hook the long hook side of the return spring with the lever. (4WD)

3) Depress clutch pedal to assure there is no abnormality in the clutch system.

Precautions

When reinstallation, pay attention to the following items.
1) Check the routing of clutch cable for smoothness.
2) Excessive tightness or looseness of clutch cable have a had influence upon the cable durability.
3) Apply grease sufficiently to the connecting portion of clutch pedal.
4) Apply grease sufficiently to the release lever portion.
5) Position clutch cable through the center of toeboard hole and route it smoothly. Adjustment is done by moving the outer cable.
6) Make sure not to make clutch chattering at starting forward or rearward. If clutch chattering occurs, readjust so that the bend of clutch outer cable becomes flatter.

REMOVAL

1) Clutch cover CP and clutch disc CP.

a. Take care not to allow oil on the clutch disc facing.
b. Do not disassemble either clutch cover CP or clutch disc CP.

2) Release bearing hoder and clutch release lever.

FWD

1) Two clips from lever
2) Release bearing holder
3) Retainer spring from pivot
4) Clutch release lever and sealing

4WD

1) Two clips from lever
2) Release bearing ASSY
3) Retainer spring from pivot
4) Clutch release lever and sealing

Be careful not to deform clutch lever & holder clip and clutch lever retaining spring.

INSPECTION

Inspect all the disassembled parts for wear or damage, and repair or replace if necessary.

<table>
<tr><th>No.</th><th>Parts</th><th>Inspection</th><th>Corrective action</th></tr>
<tr><td rowspan="5">1</td><td rowspan="5">Clutch disc CP.</td><td>(1) Wear of facing</td><td>Measure the depth of rivet head from the surface of facing. Replace if facings are worn locally or worn down to less than the specified value.
<table><tr><th colspan="2">Depth of rivet head</th></tr><tr><td>Standard value</td><td>1.4 mm (0.055 in)</td></tr><tr><td>Limit of sinking</td><td>0.3 mm (0.012 in)</td></tr></table>Do not wash clutch disc with any cleaning fluid.</td></tr>
<tr><td>(2) Hardened facing</td><td>Correct by using emery paper or replace.</td></tr>
<tr><td>(3) Oil soakage on facing</td><td>Replace clutch disc and inspect transmission front oil seal, transmission case mating surface, engine rear oil seal and other points for oil leakage.</td></tr>
<tr><td>(4) Deflection of facing</td><td>If deflection exceeds the specified value at the outer circumference of facing, repair or replace.
Limit for deflection
0.7 mm (0.028 in)
at R = 95 mm (3.74 in)
... FWD
R = 107 mm (4.21 in)
... 4WD
 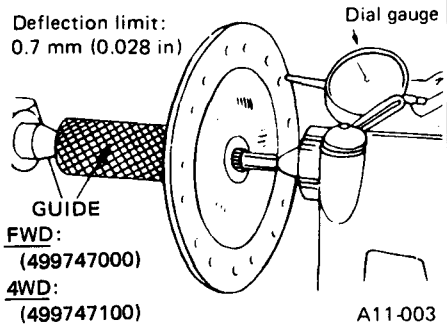

Fig. 5</td></tr>
<tr><td>(5) Worn spline, loose rivets and torsion spring failure.</td><td>Replace.</td></tr>
</table>

No.	Parts	Inspection	Corrective action
2	Clutch cover CP.	Visually check for the following items without disassembling. 1) Loose thrust rivet ①. 2) Damaged or worn bearing contact area at center of diaphragm spring ②. 3) Damaged or worn disc contact surface of pressure plate ③. 4) Loose strap plate setting bolt ④. 5) Worn diaphragm sliding surface ⑤. 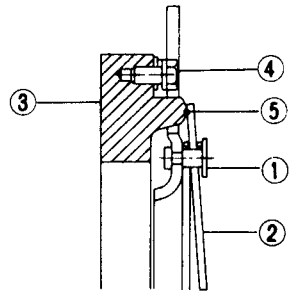 A12-437 *Fig. 6*	Repair or replace.
3	Clutch release bearing. **Since this bearing is grease-sealed and is of a non-lubrication type, do not wash with gasoline or any solvent when servicing the clutch.**	(1) Smoothness of rotation Rotate bearing applying pressure in thrust direction.	Repair or replace.
		(2) Wear and damage of holder surface contacting with lever.	Repair or replace. Replacing of clutch release bearing (FWD only) 1) Remove bearing out of holder. 2) Press bearing. **Do not depress outer race.** 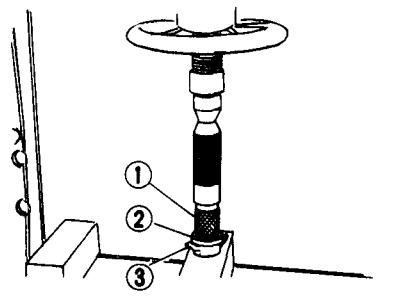 A11-007 1 PRESS (899754112) 2 Bearing (Clutch release) 3 Holder (Release bearing) *Fig. 8*
		(3) 4WD Check the bearing ASSY for smooth movement by applying force in the radial direction. 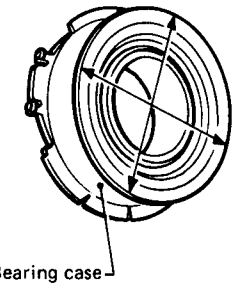 L2-216 *Fig. 7*	
4	Clutch release lever.	Check lever pivot portion and the point of contact with holder for wear.	Repair or replace.

No.	Parts	Inspection	Corrective action
5	Flyweel CP **Since this bearing is grease-sealed and is of a non-lubrication type, do not wash with gasoline or any solvent.**	(1) Damage of facing.	Replace.
		(2) Smoothness of rotation Rotate ball bearing applying pressure in thrust direction.	Repair or replace. Pressing of ball bearing Press bearing into flywheel until bearing end surface is flush with flywheel. **Do not press inner race.** 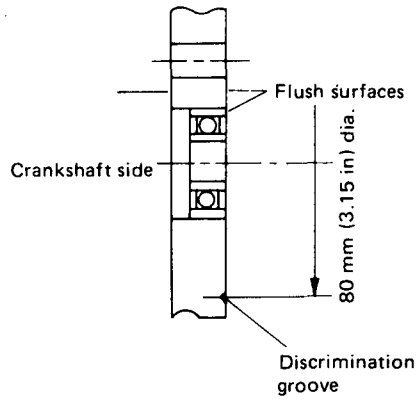 A12-438 *Fig. 9*

INSTALLATION

1) Install clutch release lever and release bearing holder (FWD) or bearing ASSY (4WD).

Before or during assembling, lubricate the following points with a light coat of grease.
a. Inner groove of release bearing holder.
b. Contact surface of lever and pivot.
c. Contact surface of lever and holder.
d. Transmission main shaft spline. (Use grease containing molybdenum disulphide.)

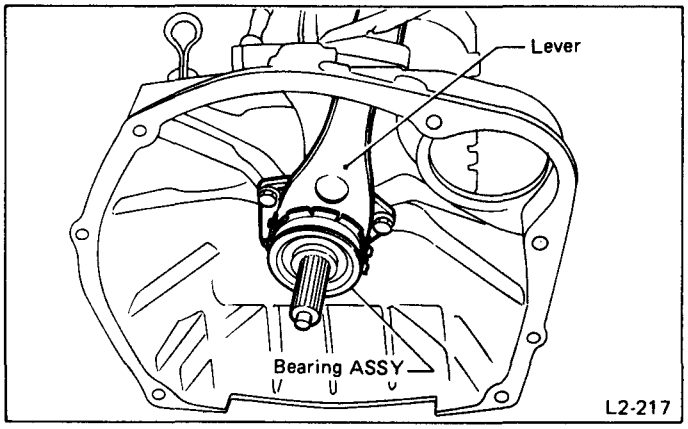

Fig. 10

(1) Install retainer spring into lever.
(2) While pushing lever to pivot and twisting it to both sides, fit retainer spring onto the constricted portion of pivot.

Confirm that retainer spring is securely fitted by seeing through the main case hole.

(3) Install holder (FWD) or bearing ASSY (4WD) and fasten it with two clips.
(4) Install clutch release lever sealing.

2) Insert GUIDE (499747000) for FWD or (499747100) for 4WD into clutch disc CP and install them on flywheel by inserting the end of Guide into pilot bearing.

Install clutch cover CP on flywheel and tighten bolts to the specified torque.

Tightening torque:
14.2 – 17.2 N·m
(1.45 – 1.75 kg-m, 10.5 – 12.7 ft-lb)

a. When installing the clutch cover on the flywheel, position the clutch cover so that there is a gap of 120° or more between "0" marks on the flywheel and clutch cover.
("0" marks indicate the directions of residual unbalance.)
b. Note the front and rear of the clutch disc when installing.
c. Tighten clutch cover installing bolts gradually.
Each bolt should be tightened in a crisscross fashion to the specified torque.

3) After remounting engine and transmission on body, make adjustment with the nut at the lever end so that the clutch release lever end play is 2 to 3 mm (0.08 to 0.12 in) for FWD and 3 to 4 mm (0.12 to 0.16 in) for 4WD.

Take care not to twist the cable during adjustment.

4) Install release lever return spring.

Hook up the long hook side of the return spring with the lever (4WD).

TROUBLESHOOTING

Condition	Possible cause and testing	Corrective action
1. Clutch slippage	It is hard to perceive clutch slippage in the early stage, but pay attention to the following symptoms. (a) Engine revs up when shifting. (b) High speed driving is impossible; especially rapid acceleration impossible and vehicle speed does not increase in proportion to an increase in engine speed. (c) Power falls, particularly when ascending a slope, and there is a smell of burning of the clutch facing. ● Method of testing: Put the car in stationary condition with parking brake fully applied. Disengage the clutch and shift the transmission gear into the first. Gradually allow the clutch to engage while gradually increasing the engine speed. The clutch function is satisfactory if the engine stalls. However, the clutch is slipping if the car does not start off and the engine does not stall.	
	(a) No clutch pedal play	Readjust.
	(b) No release lever end play	Readjust.
	(c) Clutch facing smeared by oil	Replace.
	(d) Worn clutch facing	Replace.
	(e) Deteriorated diaphragm spring	Replace.
	(f) Distorted pressure plate or flywheel	Correct or replace.
	(g) Defective release bearing holder	Correct or replace.
	(h) Defective pedal and cable system	Correct or replace.
2. Clutch drags	As a symptom of this trouble, a harsh scratching noise develops and control becomes quite difficult when shifting gears. The symptom becomes more apparent when shifting into the first gear. However, because much trouble of this sort is due to defective synchronization mechanism, carry out the test as described after. ● Method of testing: Refer to diagnostic diagram on page after.	
	It may be judged as insufficient disengagement of clutch if any noise occurs during this test.	
	(a) Excessive clutch pedal play	Readjust.
	(b) Excessive clutch release lever play	Readjust.
	(c) Worn or rusty clutch disc hub spline	Replace clutch disc.
	(d) Excessive deflection of clutch disc facing	Correct or replace.
	(e) Seized crankshaft pilot needle bearing	Replace.
	(f) Malfunction of pedal and cable system	Correct or replace.
	(g) Cracked clutch disc facing	Replace.
	(h) Sticked clutch disc (smeared by oil or water)	Replace.

Condition	Possible cause and testing	Corrective action
3. Clutch chatters	Clutch chattering is an unpleasant vibration to the whole body when the vehicle is just started with clutch partially engaged.	
	(a) Improper clutch cable routing	Correct.
	(b) Adhesion of oil on the facing	Replace clutch disc.
	(c) Weak or broken torsion spring	Replace clutch disc.
	(d) Defective facing contact or excessive disc deflection	Replace clutch disc.
	(e) Warped pressure plate or flywheel	Correct or replace.
	(f) Loose disc rivets	Replace clutch disc.
	(g) Loose engine mounting	Retighten or replace mounting.
	(h) Improper adjustment of pitching stopper	Adjustment.
4. Noisy clutch	Examine whether the noise is generated when the clutch is disengaged, engaged, or partially engaged.	
	(a) Broken, worn or unlubricated release bearing	Replace release bearing.
	(b) Insufficient lubrication of pilot bearing	Apply grease.
	(c) Loose clutch disc hub	Replace clutch disc.
	(d) Loose torsion spring retainer	Replace clutch disc.
	(e) Deteriorated or broken torsion spring	Replace clutch disc.
5. Clutch grabs	When starting the vehicle with the clutch partially engaged, the clutch engages suddenly and the car jumps instead of making a smooth start.	
	(a) Grease or oil on facing	Replace clutch disc.
	(b) Deteriorated cushioning spring	Replace clutch disc.
	(c) Worn or rusted spline of clutch disc or main shaft	Take off rust, apply grease or replace clutch disc or mainshaft.
	(d) Deteriorated or broken torsion spring	Replace clutch disc.
	(e) Loose engine mounting	Retighten or replace mounting.
	(f) Deteriorated diaphragm spring	Replace.

Diagnostic Diagram of Clutch Drags

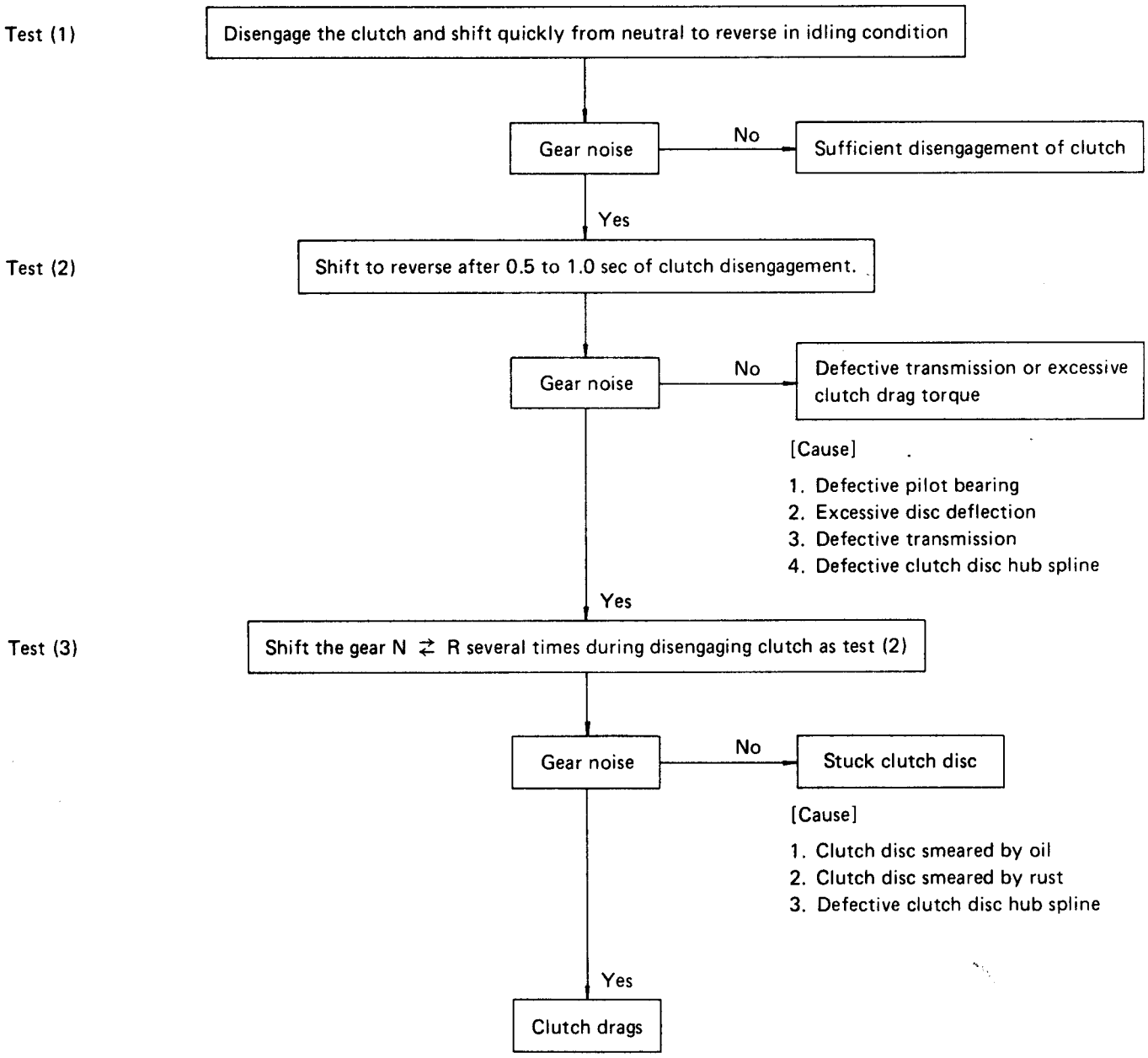

[Cause]

1. Cracked clutch disc facing
2. Damaged or worn clutch cover
3. Malfunction of clutch release system
4. Insufficient clutch release amount
5. Excessive clutch pedal play

ENGINE AND TRANSMISSION MOUNTING SYSTEM

2-11

SUBARU

1988

	Page
COMPONENT PARTS	2
Engine Mounting	2
Transmission Mounting	3
SERVICE PROCEDURE	5
General Precaution	9
Engine	9
Transmission	18

This chapter applies to the 2700 cc model. For service procedures regarding the 1800 cc model, refer to section 2-11 of the 1987 Service Manual.

COMPONENT PARTS

Engine Mounting

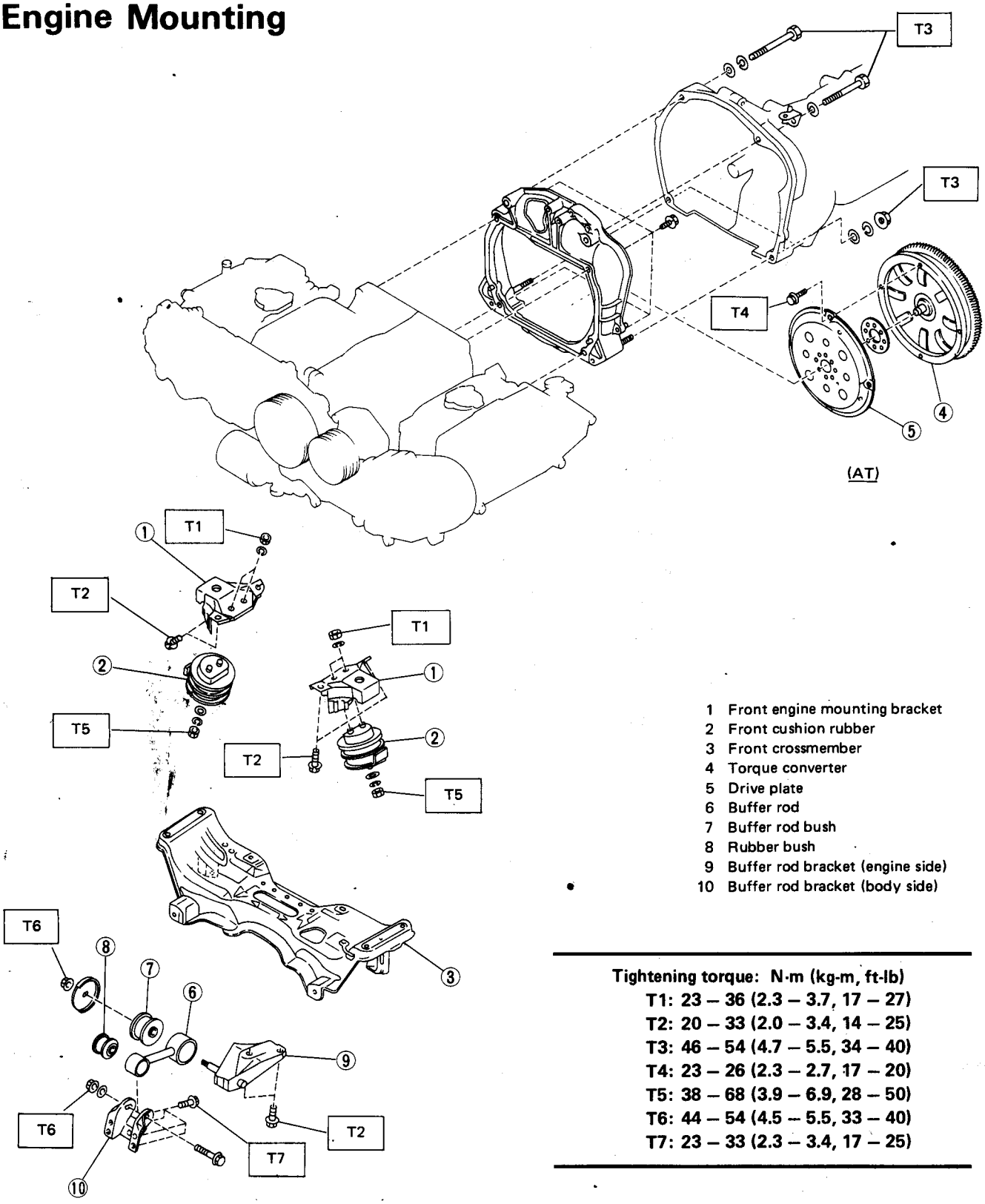

1 Front engine mounting bracket
2 Front cushion rubber
3 Front crossmember
4 Torque converter
5 Drive plate
6 Buffer rod
7 Buffer rod bush
8 Rubber bush
9 Buffer rod bracket (engine side)
10 Buffer rod bracket (body side)

Tightening torque: N·m (kg-m, ft-lb)
T1: 23 – 36 (2.3 – 3.7, 17 – 27)
T2: 20 – 33 (2.0 – 3.4, 14 – 25)
T3: 46 – 54 (4.7 – 5.5, 34 – 40)
T4: 23 – 26 (2.3 – 2.7, 17 – 20)
T5: 38 – 68 (3.9 – 6.9, 28 – 50)
T6: 44 – 54 (4.5 – 5.5, 33 – 40)
T7: 23 – 33 (2.3 – 3.4, 17 – 25)

Fig. 1

L2-1416

Transmission Mounting

MT Model

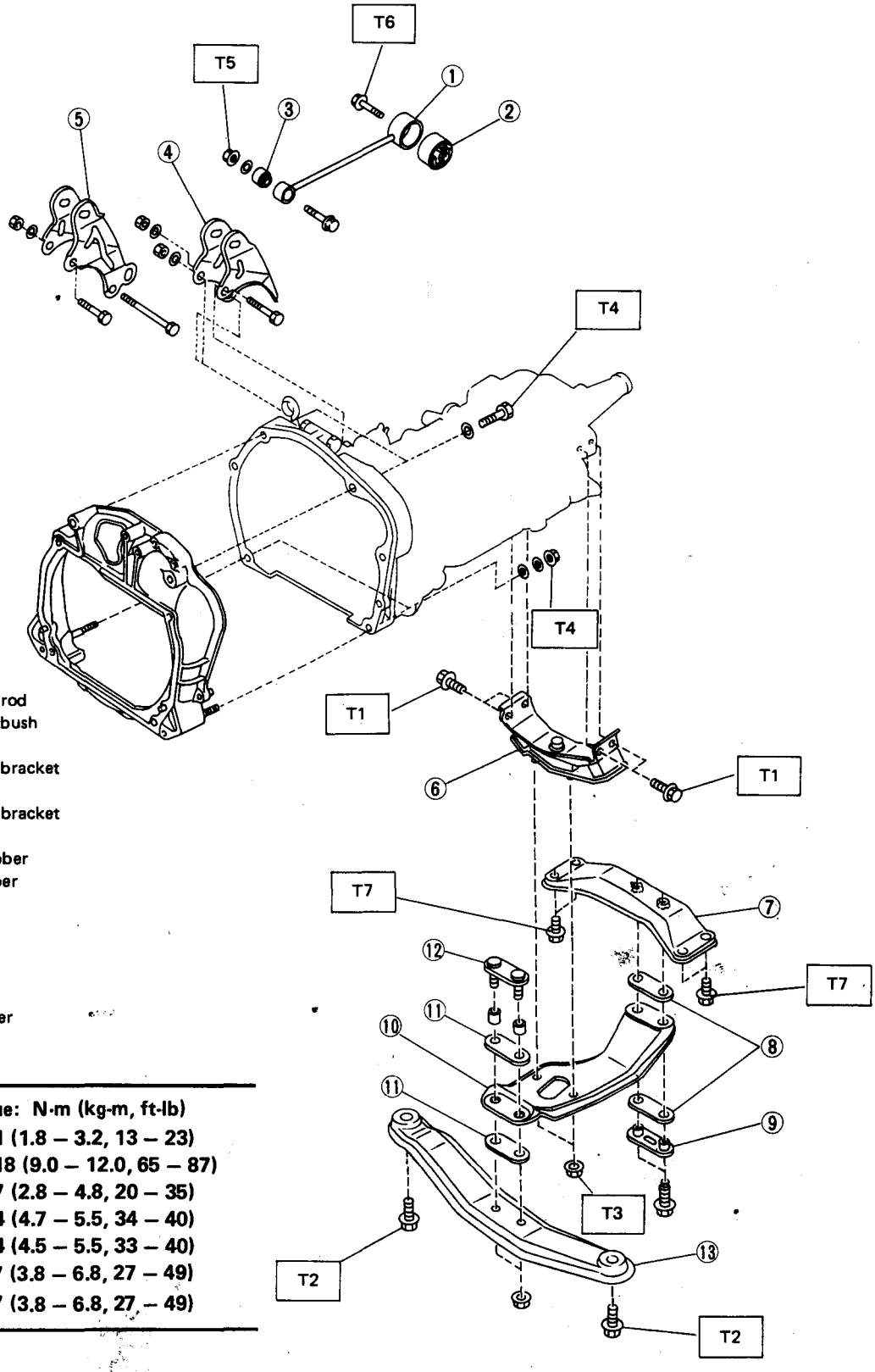

1 Pitching stopper rod
2 Pitching stopper bush
3 Rubber bush
4 Pitching stopper bracket (4WD)
5 Pitching stopper bracket (FWD)
6 Rear cushion rubber
7 Rigid crossmember
8 Cushion
9 Mounting plate
10 Crossmember
11 Cushion
12 Plate
13 Rear crossmember

Tightening torque: N·m (kg-m, ft-lb)
T1: 18 – 31 (1.8 – 3.2, 13 – 23)
T2: 88 – 118 (9.0 – 12.0, 65 – 87)
T3: 27 – 47 (2.8 – 4.8, 20 – 35)
T4: 46 – 54 (4.7 – 5.5, 34 – 40)
T5: 44 – 54 (4.5 – 5.5, 33 – 40)
T6: 37 – 67 (3.8 – 6.8, 27 – 49)
T7: 37 – 67 (3.8 – 6.8, 27 – 49)

L2-1417

Fig. 2

AT Model

1 Pitching stopper bush
2 Pitching stopper rod
3 Rubber bush
4 Pitching stopper bracket
5 Rear cushion rubber LH (4WD)
6 Rear cushion rubber RH (4WD)
7 Rear cushion rubber (FWD)
8 Cushion rubber stopper (4WD)
9 Rear crossmember ASSY
10 Plate
11 Mounting bolt

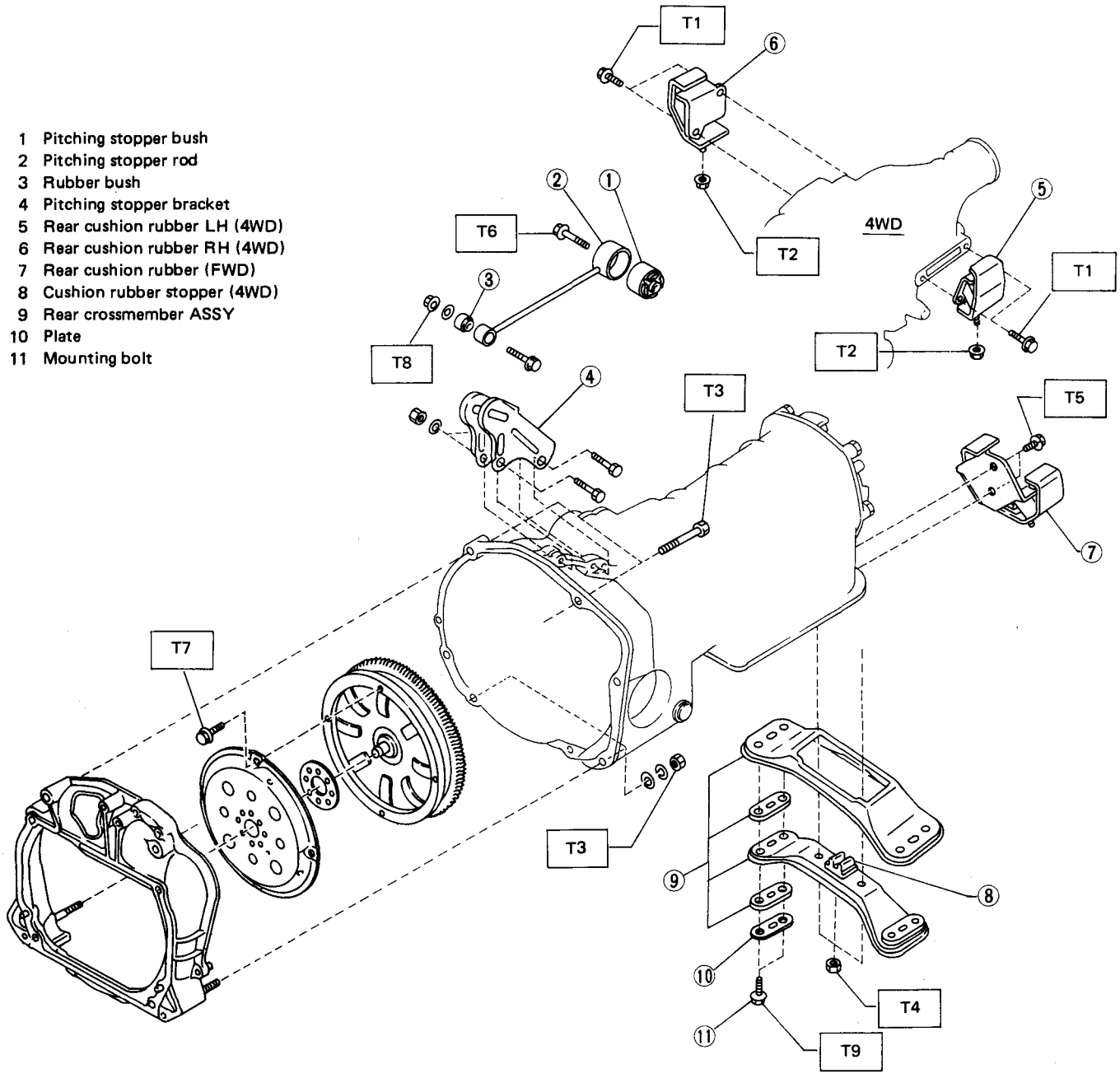

Tightening torque: N·m (kg-m, ft-lb)

T1: 18 – 31 (1.8 – 3.2, 13 – 23)
T2: 27 – 47 (2.8 – 4.8, 20 – 35)
T3: 46 – 54 (4.7 – 5.5, 34 – 40)
T4: 13 – 23 (1.3 – 2.3, 9 – 17)
T5: 20 – 33 (2.0 – 3.4, 14 – 25)
T6: 37 – 67 (3.8 – 6.8, 27 – 49)
T7: 23 – 26 (2.3 – 2.7, 17 – 20)
T8: 44 – 54 (4.5 – 5.5, 33 – 40)
T9: 53 – 67 (5.4 – 6.8, 39 – 49)

L2-1418

Fig. 3

SERVICE PROCEDURE

All descriptions in this chapter apply to the 2700 cc model. For service procedures regarding the 1800 cc model, refer to section 2-11 "Engine and Transmission Mounting System" of the 1987 Service Manual.

Procedure Chart for Removing and Installing Engine and Related Parts

REMOVAL

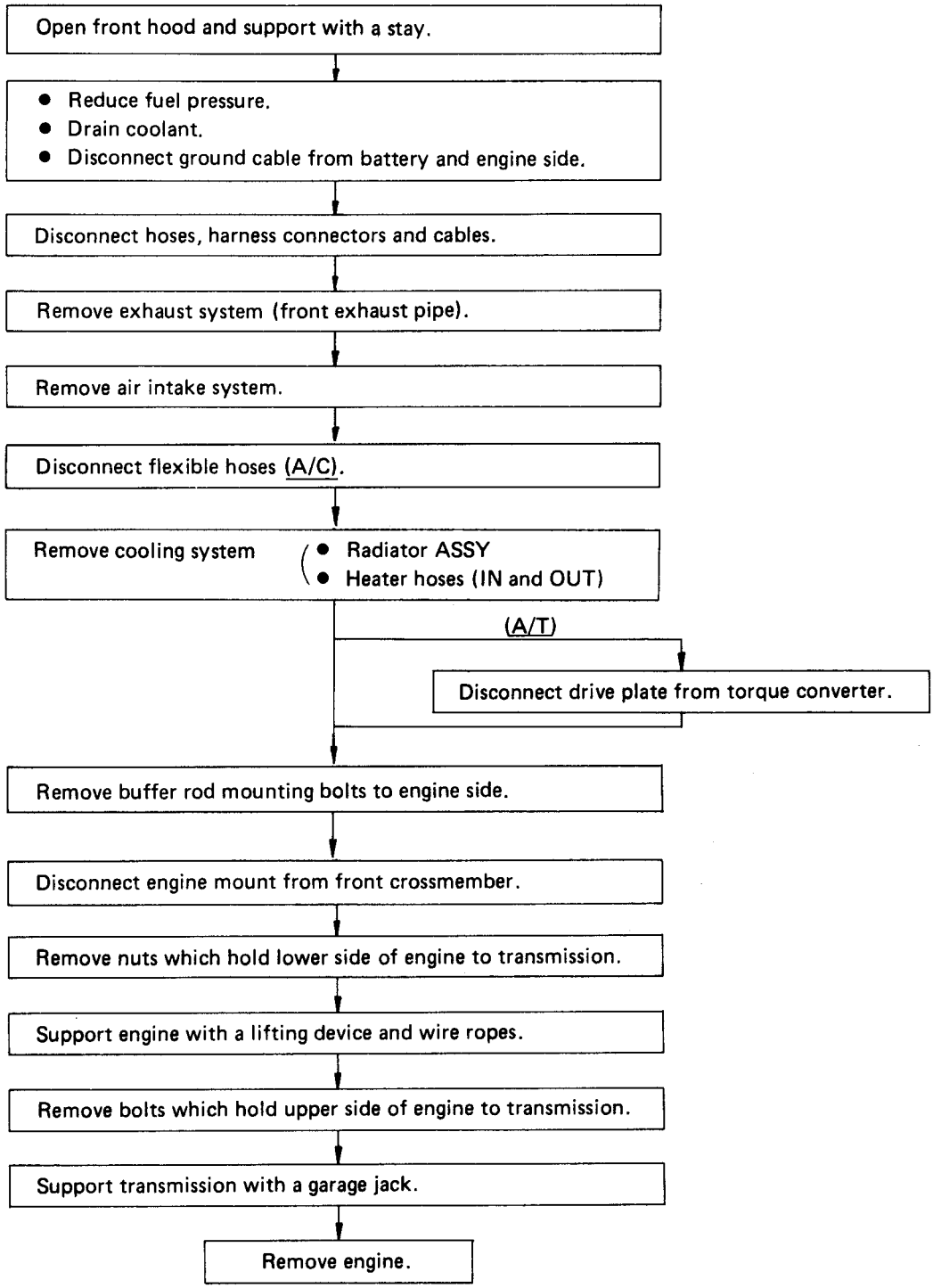

INSTALLATION

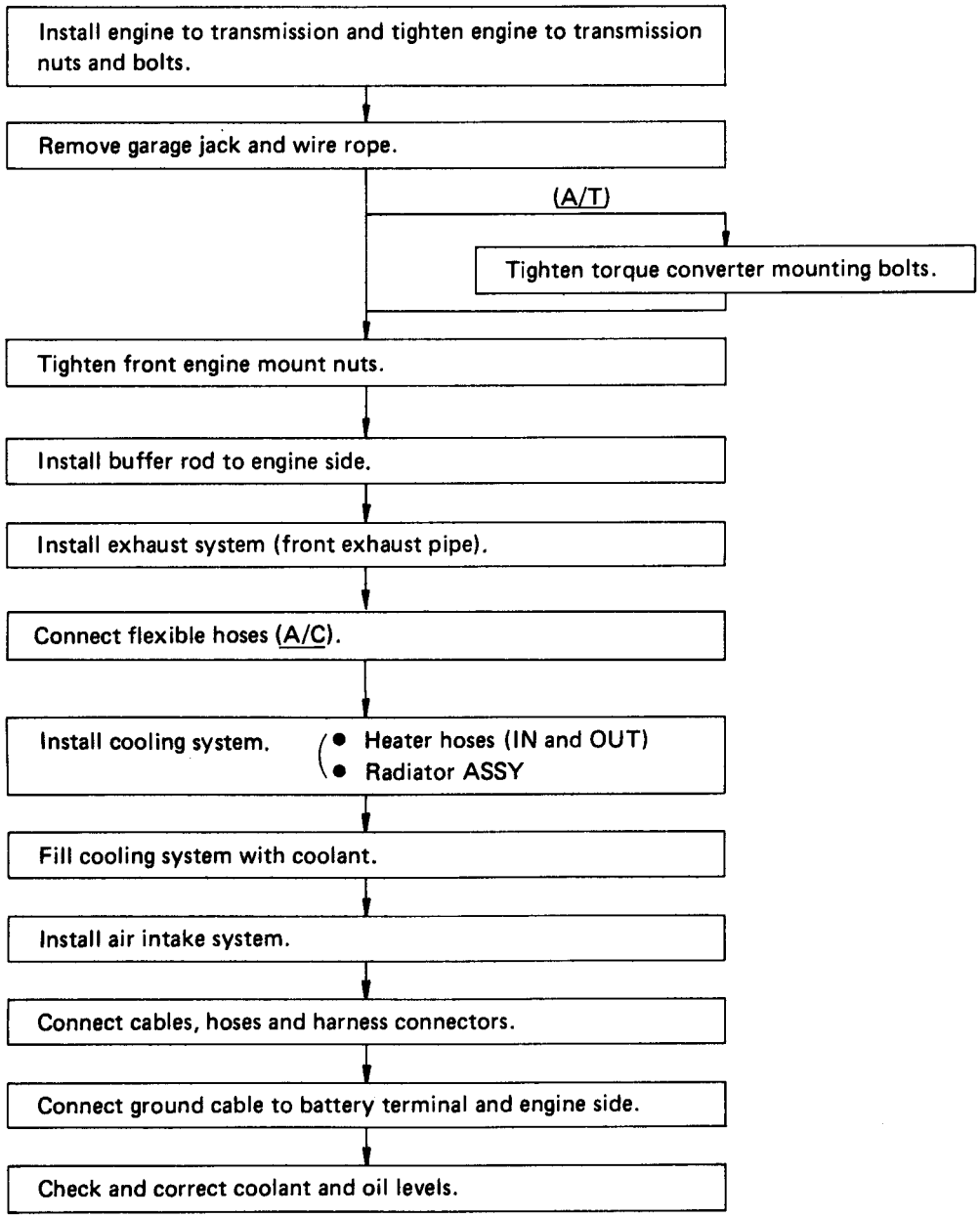

This flowchart shows the main procedure for removing and installing the engine and its related parts. For details, refer to the text.

Procedure Chart for Removing and Installing Transmission and Related Parts

REMOVAL

- Open front hood and support with a stay.
- Disconnect ground cable from battery and transmission side.
- Disconnect cables, harness connectors and hoses.
- (A/T)
  - Disconnect torque converter from drive plate.
- Disconnect pitching stopper rod from bracket.
- Remove bolts which hold upper side of engine to transmission.
- Set the special tool.
- Remove exhaust system (front exhaust pipe).
- (4WD)
  - Remove propeller shaft.
- Remove gear shift system.
- Disconnect axle shaft from drive shaft on each side.
- Remove nuts which hold lower side of engine to transmission.
- (A/T)
  - Disconnect oil cooler hoses.
- Place transmission jack under transmission.
- Remove rear cushion rubber mounting nuts and rear cross-member.
- Remove transmission.

INSTALLATION

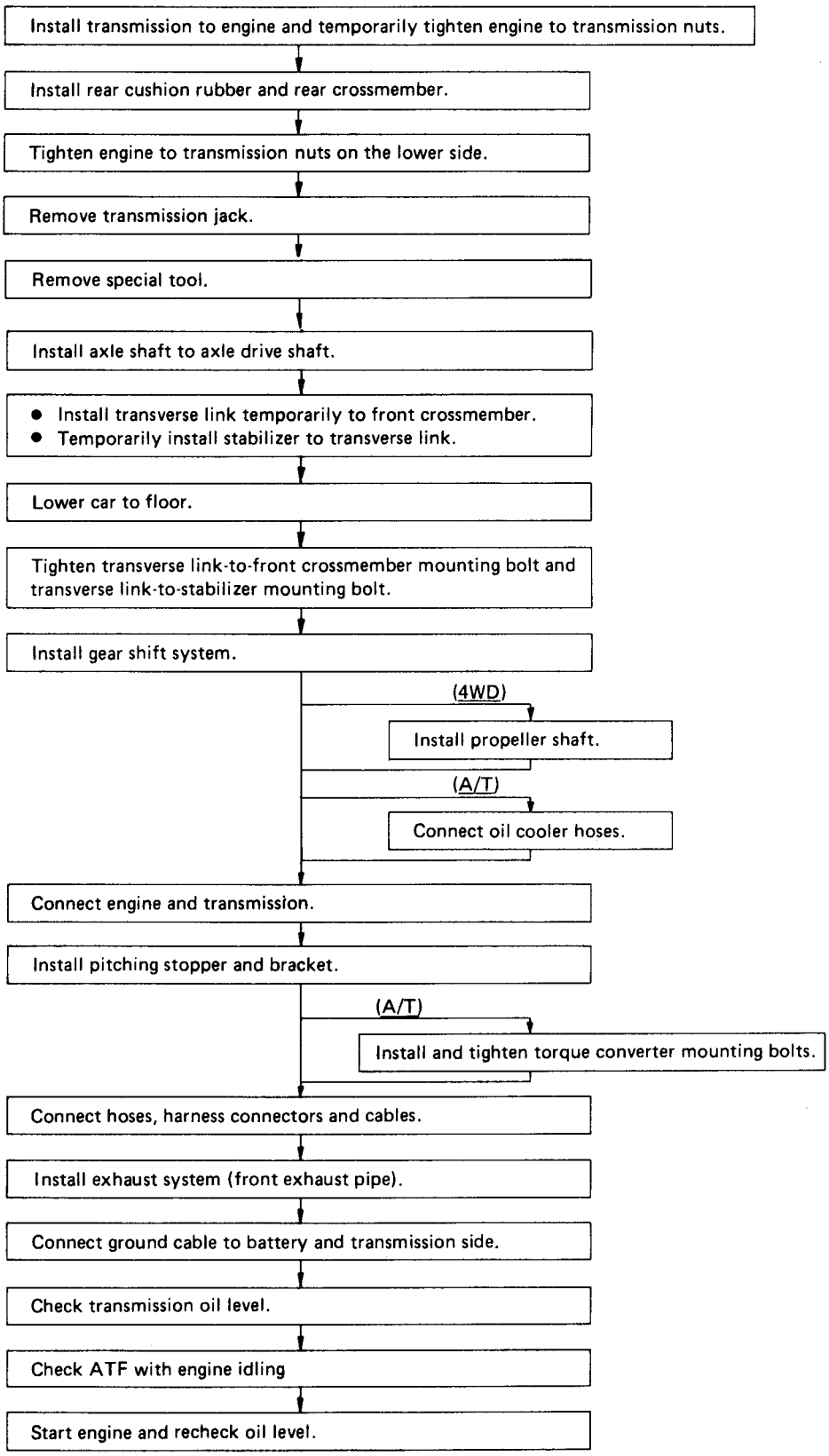

This flowchart shows the main procedures for removing and installing the transmission and its related parts. For details, refer to the text.

General Precaution

1) Remove or install engine and transmission in an area where chain hoists, lifting devices, etc. are available for ready use.
2) Be sure not to damage coated surfaces of body panels with tools or stain seats and windows with coolant or oil. Place a cover over fenders, as required, for protection.
3) Prior to starting work, prepare the following:
Service tools, clean cloth, containers to catch coolant and oil, wire ropes, chain hoist, transmission jacks, etc.
4) Lift up or down car when necessary. Make sure to support the correct positions. (Refer to Chapter 1-3 "General Information".)

Engine

REMOVAL

1) Open front hood and support with a stay.

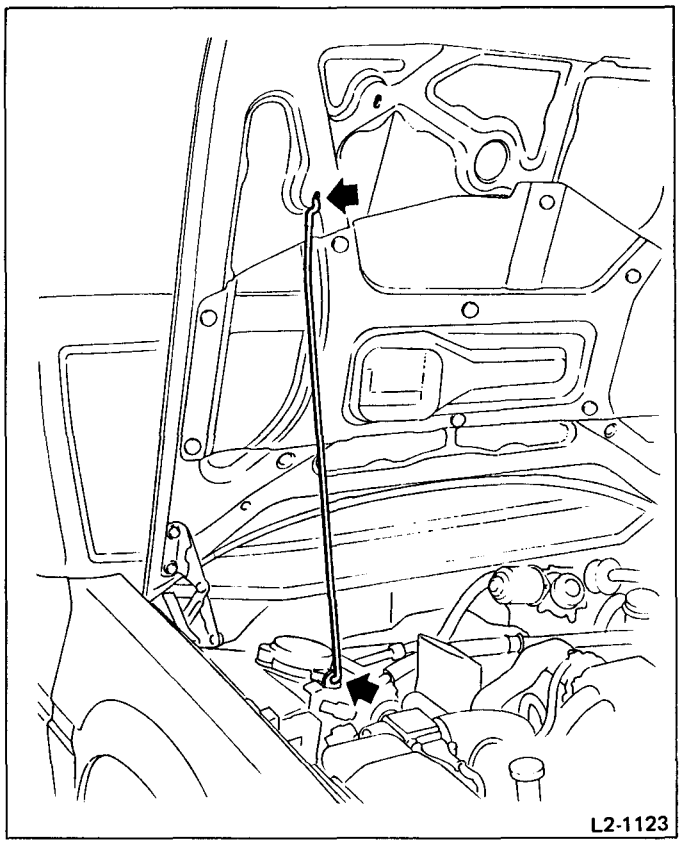

Fig. 4

2) Reduce fuel pressure.
   (1) Raise car positioned at side sill location.
   (2) Disconnect fuel pump wiring connector.

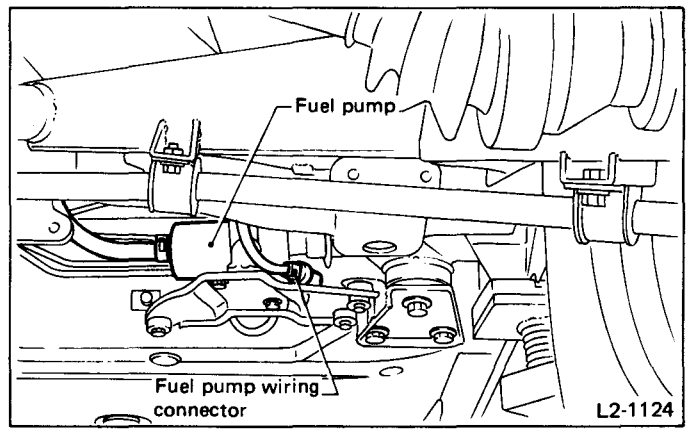

Fig. 5

   (3) Lower car to floor.
   (4) Start engine.
   (5) After engine has stopped, crank engine for approximately five seconds and then turn ignition switch to OFF.
   (6) Raise car again.
   (7) Connect fuel pump wiring connector.
3) Drain coolant.
   (1) Loosen drain cock.

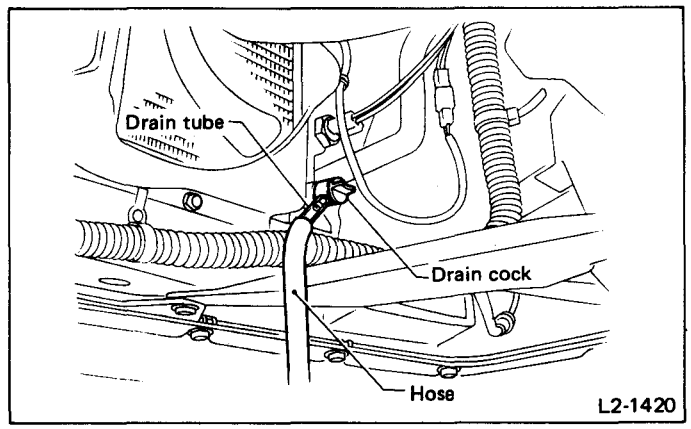

Fig. 6

   (2) Lower car to floor.
   (3) Place a container to catch coolant.
   (4) Loosen radiator cap.
4) Disconnect ground cable from battery and engine side.

5) Disconnect the following hoses.
- Canister hoses and hose bracket
- Fuel hoses (delivery, return and evaporation lines)

Place a container to catch fuel from fuel hoses.

- Brake booster vacuum hose
- Diff. lock vacuum hose (M/T Full-Time 4WD)

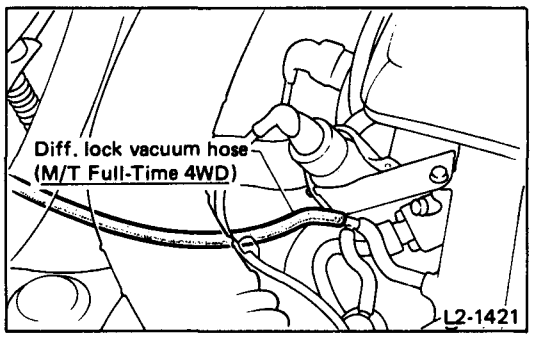

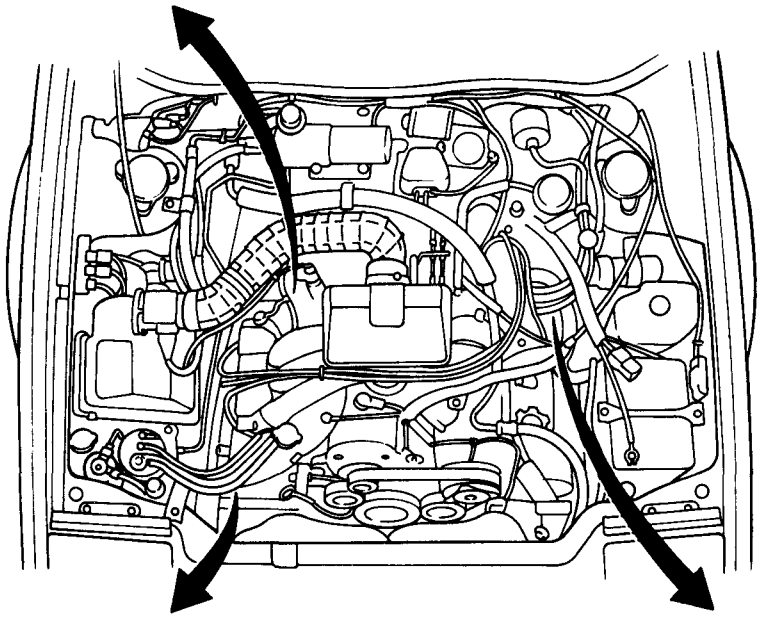

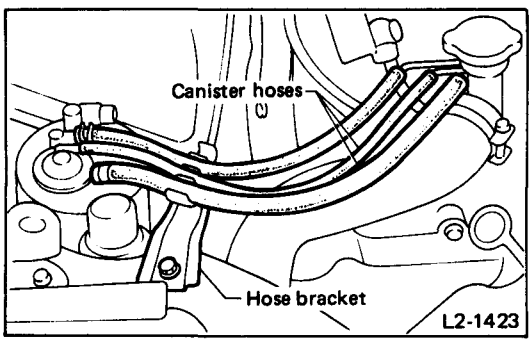

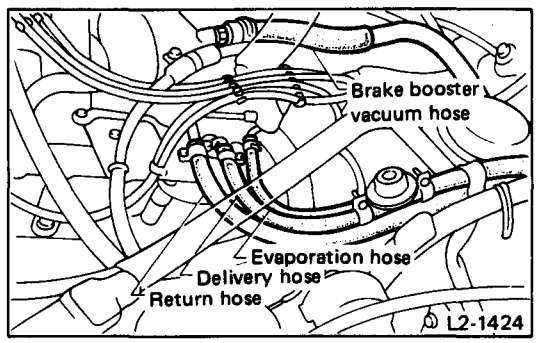

Fig. 7

6) Disconnect the following harness connectors. Also remove clips.

- Engine wiring harness connectors
- O_2 sensor connector
- By-pass air control valve connector
- High-tension cord (to ignition coil)
- Distributor connector (to crank sensor)
- Alternator connector and terminal
- Compressor connector (A/C)
- Pulser coil connector (A/C)
- Engine ground terminal
- Radiator fan motor connector
- Thermoswitch connector
- Condenser fan motor connector (A/C)

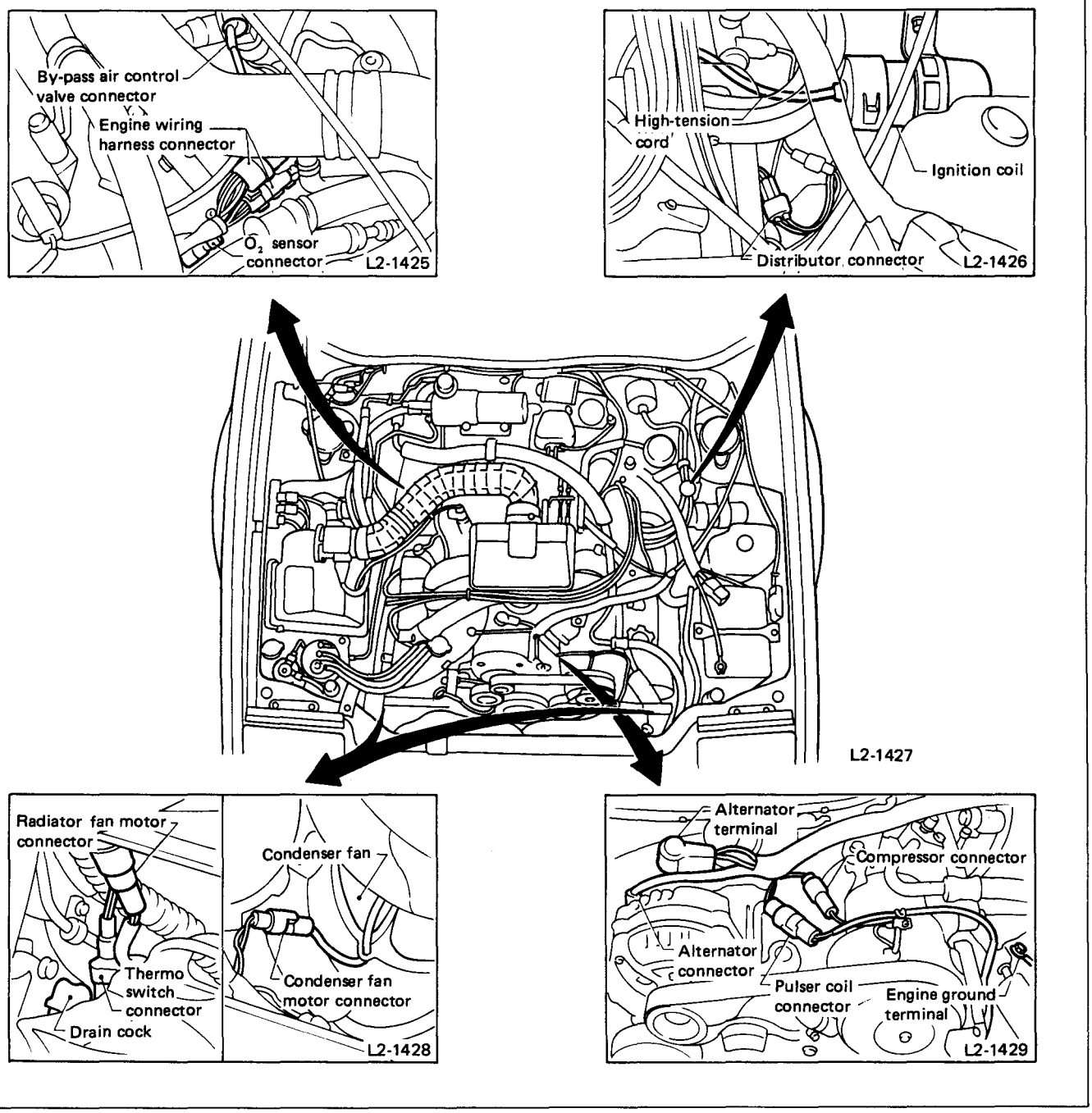

Fig. 8

7) Disconnect the following cables.
- Accelerator cable
- Cruise control cable (Cruise control model)
- Hill-holder cable (M/T)

Disconnect hill-holder cable at connection on clutch release fork side, and remove cable clamps.

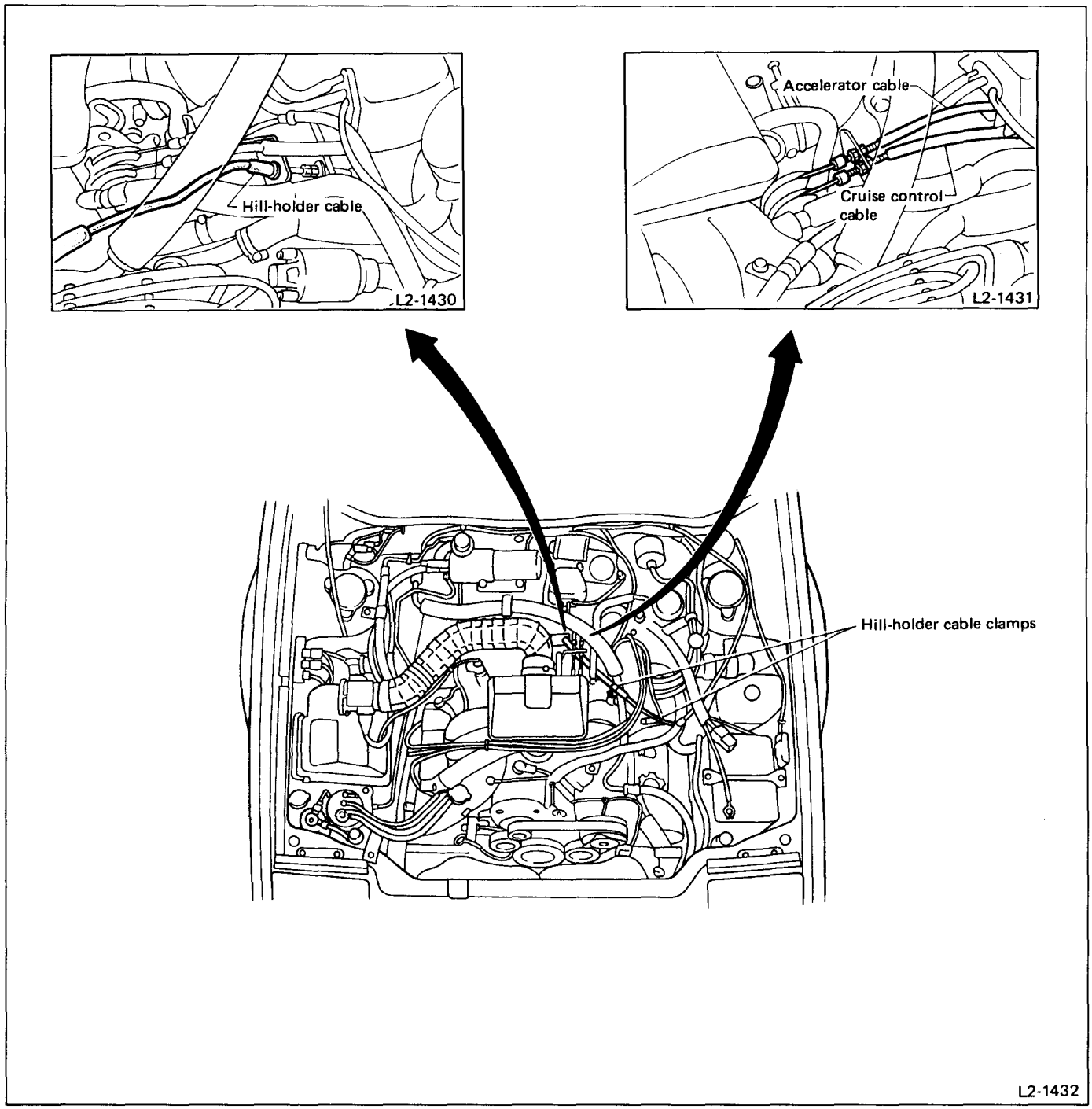

Fig. 9

8) Remove front exhaust pipe.

(1) Raise car.

(2) Disconnect front exhaust pipe from engine.

Remove all nuts except one. (This nut is used to temporarily hold exhaust pipe.)

(3) Disconnect front-to-rear exhaust pipe connection.

(4) Disconnect front exhaust pipe at transmission and hanger locations.

(5) Remove the nut which was used to temporarily hold exhaust pipe in step (1) above, and disconnect front exhaust pipe.

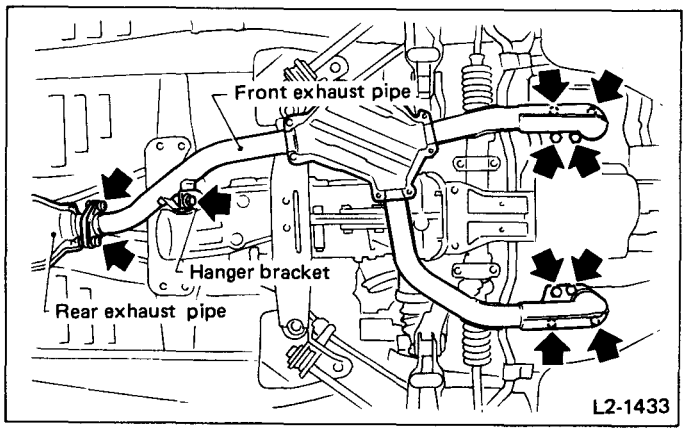

Fig. 10

9) Remove air intake boot, upper air cleaner case and element, disconnect air flow meter connector.

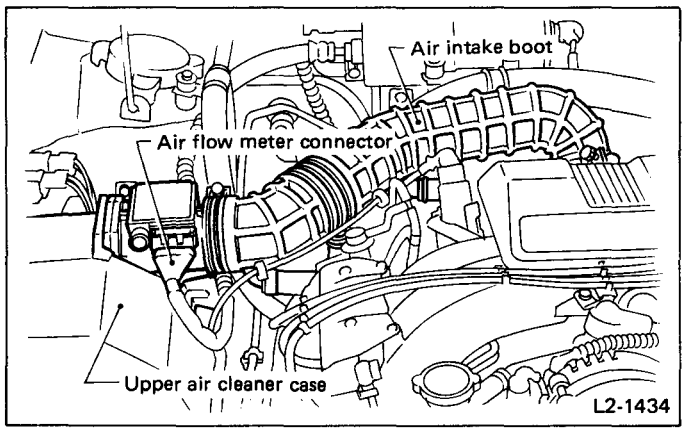

Fig. 11

10) Disconnect flexible hoses. (Refer to 4-7 "Air Conditioning System".)

(1) Discharge refrigerant at low-pressure service valve.

(2) Disconnect flexible hoses (low- and high-pressure hoses) from compressor side and remove clamp.

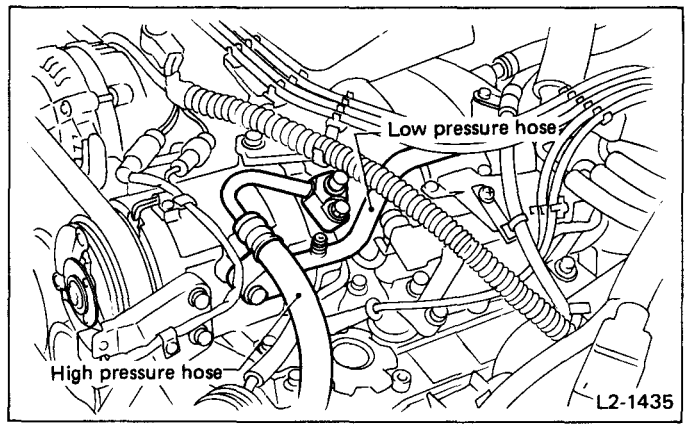

Fig. 12

Plug the opening to prevent foreign matter from entering.

11) Remove radiator ASSY.

(1) Remove radiator and condenser fan shroud.

(2) Disconnect radiator hoses (IN and OUT) and reservoir hose.

Place a container to catch coolant.

(3) Disconnect oil cooler hoses (IN and OUT) from radiator side. (A/T)

Plug the opening hoses to prevent oil from flowing out.

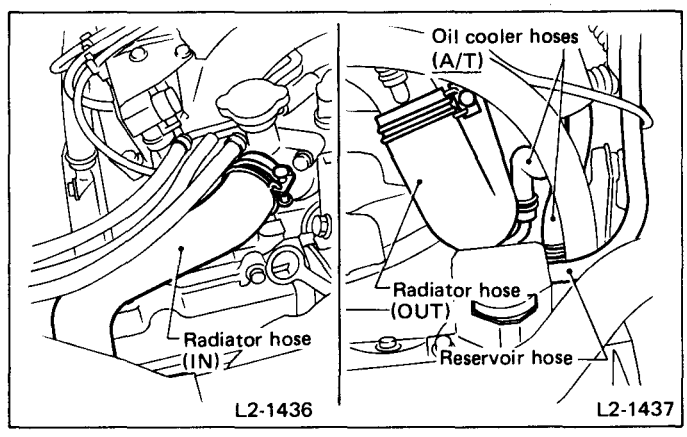

Fig. 13

(4) Remove the bolts from the upper side of the radiator, then remove the radiator.

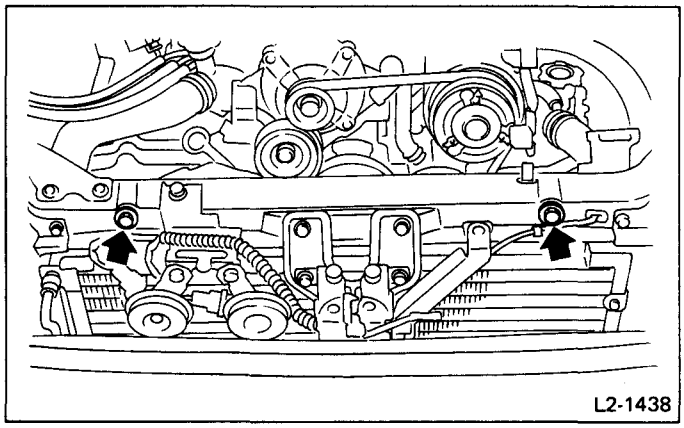

Fig. 14

12) Disconnect heater hoses (IN and OUT).

a. Catch remaining coolant.
b. Be sure to disconnect heater hoses from engine side.

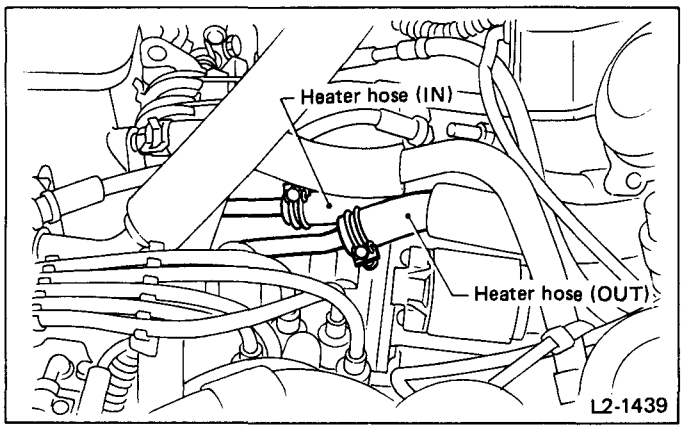

Fig. 15

13) Remove timing hole plug and remove four bolts which hold torque converter to drive plate. (A/T)

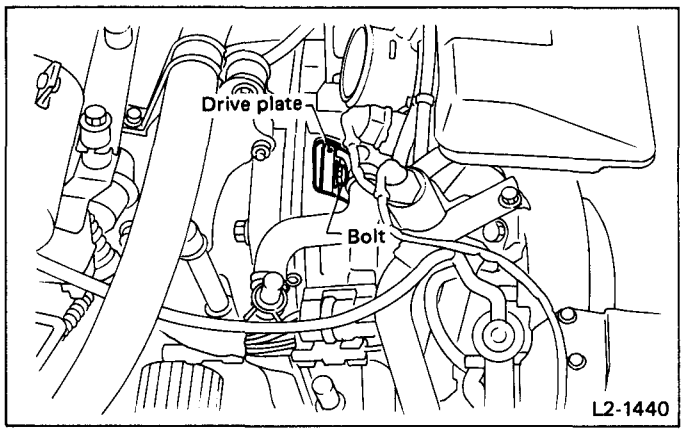

Fig. 16

14) Remove buffer rod mounting bolts to engine side.

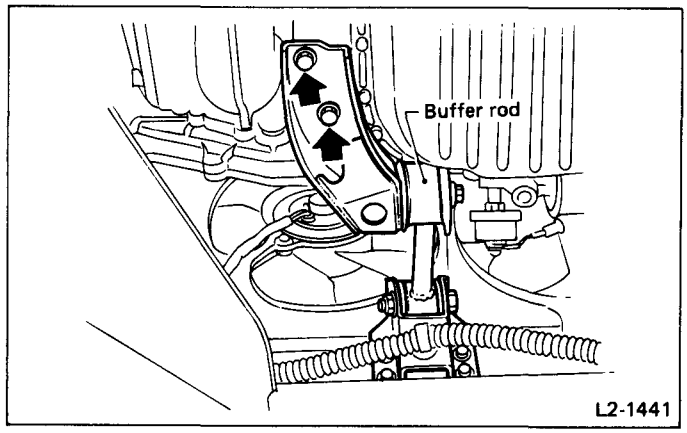

Fig. 17

15) Remove nuts which hold engine mount to front crossmember.

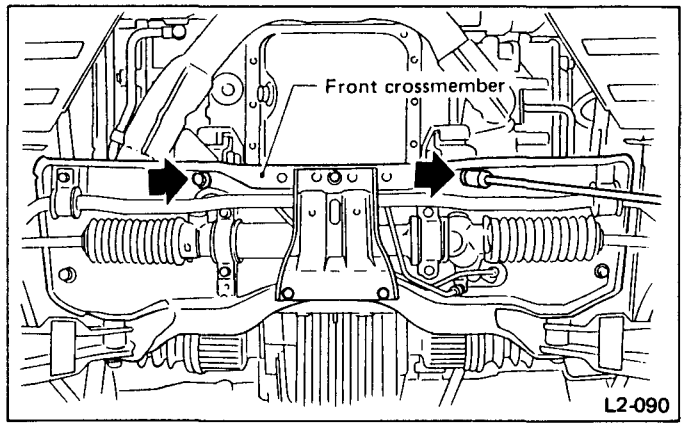

Fig. 18

16) Remove nuts which hold lower side of engine to transmission.

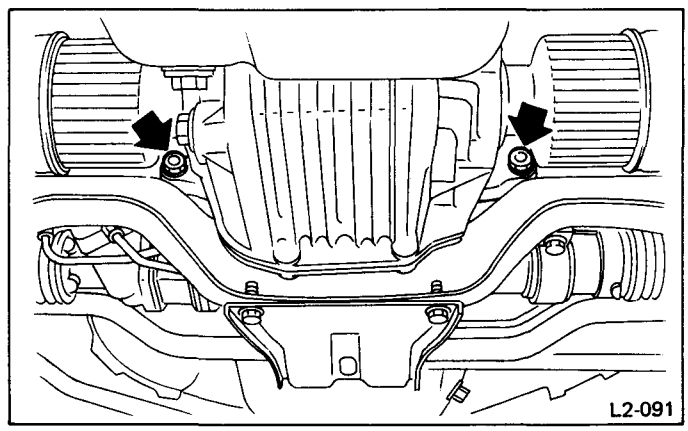

Fig. 19

17) Support engine with a lifting device and wire ropes.

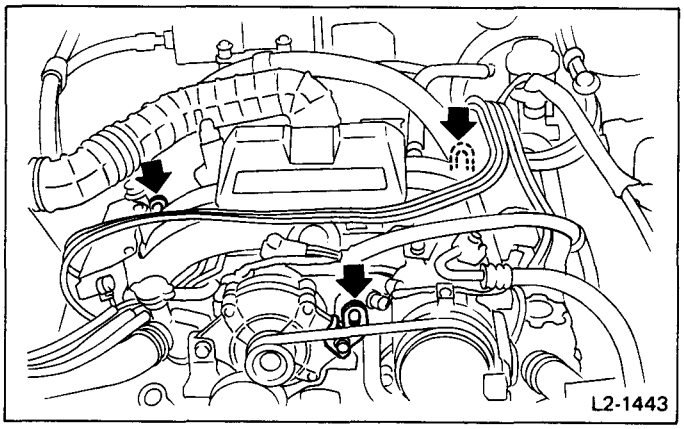

Fig. 20

18) Remove bolts which hold upper side of engine to transmission.

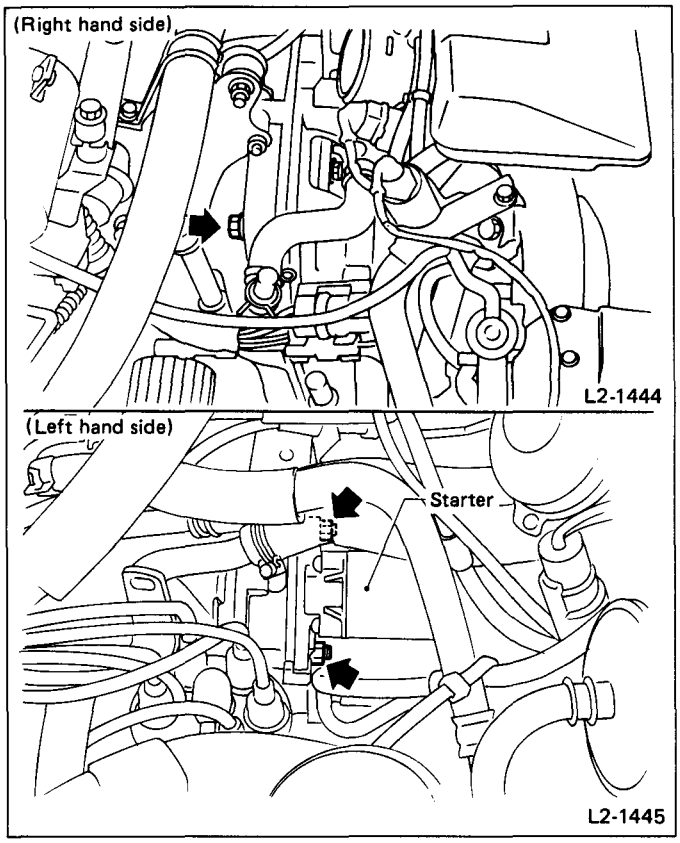

Fig. 21

19) Support transmission with a garage jack.

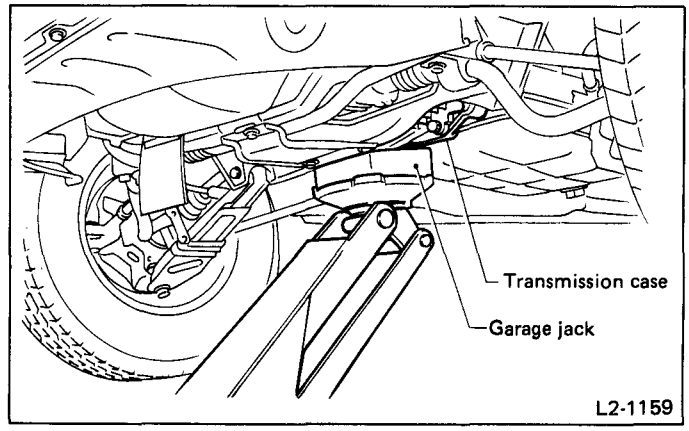

Fig. 22

Before moving engine away from transmission, check to be sure no work has been overlooked. Doing this is very important in order to facilitate re-installation and because transmission lowers under its own weight.

20) Remove engine itself.
   (1) Slightly raise engine.
   (2) Raise transmission with a garage jack.
   (3) Move engine in the direction of the arrow in the figure.

Move engine in axial direction until mainshaft is withdrawn from clutch cover. (M/T)

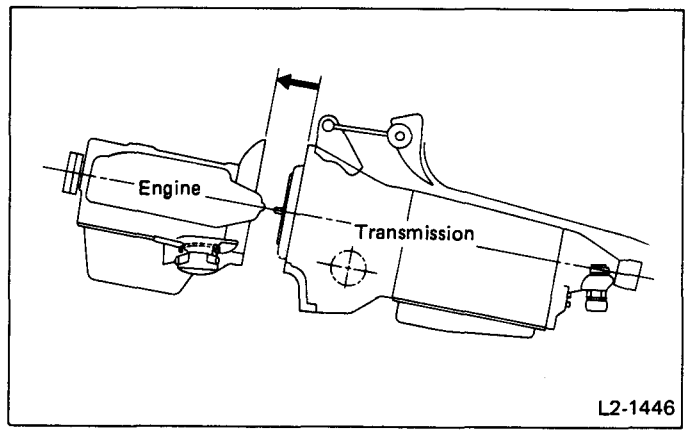

Fig. 23

(4) Slowly lifting engine away from engine compartment.

Be careful not to damage adjacent parts or body panels with crank pulley, oil pressure gauge, etc.

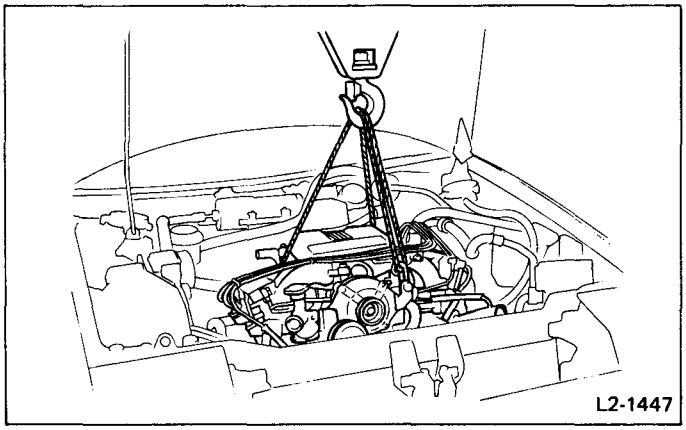

Fig. 24

INSTALLATION

1) Install engine to transmission.
- (A/T) Position engine in engine compartment and align it with transmission.

Be careful not to damage adjacent parts or body panels with crank pulley, oil pressure gauge, etc.

- (M/T) Rotate crank pulley two or three turns until mainshaft and clutch disc are properly engaged at their splines.

a. Apply a small amount of grease to splines of mainshaft in advance.
b. Be careful not to strike mainshaft against diaphragm springs to prevent deformation or damage.

2) Tighten engine-to-transmission nuts and bolts.
(1) Temporarily tighten bolt to hold the right upper side.
(2) Temporarily tighten bolt to hold starter to engine.
(3) Remove garage jack and set front engine mount on crossmember.
(4) Remove wire rope.
(5) Raise car and tighten nuts on the lower side.
(6) Lower car to floor and tighten nuts and bolts in step (1) and (2) above.

Tightening torque:
46 – 54 N·m (4.7 – 5.5 kg-m, 34 – 40 ft-lb)

3) Tighten torque converter mounting bolts. (A/T)
(1) Align torque converter with drive plate at mounting holes.
(2) While cranking engine, tighten bolts securely – one at a time.

Be careful not to drop bolts into torque converter housing.

Tightening torque:
23 – 26 N·m (2.3 – 2.7 kg-m, 17 – 20 ft-lb)

(3) Install timing hole plug.

4) Tighten front engine mount nuts.

Be sure to tighten front rubber cushion mounting bolt in the innermost elliptical hole in the front crossmember.

Tightening torque:
38 – 68 N·m (3.9 – 6.9 kg-m, 28 – 50 ft-lb)

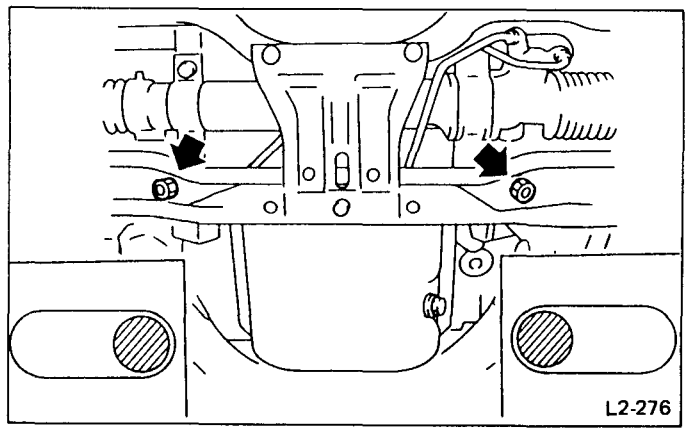

Fig. 25

5) Install buffer rod to engine side, and tighten mounting bolts.

Tightening torque:
20 – 33 N·m (2.0 – 3.4 kg-m, 14 – 25 ft-lb)

6) Install front exhaust pipe.

a. Be sure to use new gasket.
b. Position front exhaust pipe in hanger bracket, and properly align it with adjacent parts.
c. Tighten all parts in numerical sequence, as shown in figure below, to specified torque.

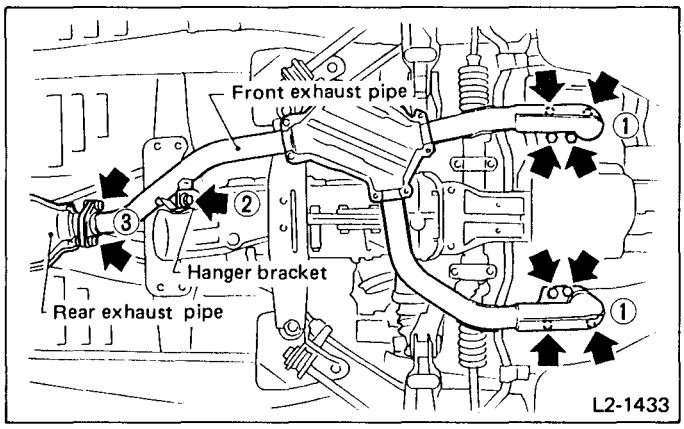

Fig. 26

Tightening torque:
Front exhaust pipe to cylinder head:
25 – 29 N·m (2.6 – 3.0 kg-m, 19 – 22 ft-lb)
Front exhaust pipe to hanger bracket:
25 – 34 N·m (2.5 – 3.5 kg-m, 18 – 25 ft-lb)
Front exhaust pipe to rear exhaust pipe:
13 – 23 N·m (1.3 – 2.3 kg-m, 9 – 17 ft-lb)

Also check to be sure there is no gas leakage after installation is completed.

7) Connect flexible hoses. (Refer to 4-7 "Air Conditioning System".)
(1) Connect flexible hoses (low- and high-pressure hoses).

Tightening torque:
15 – 25 N·m (1.5 – 2.5 kg-m, 11 – 18 ft-lb)

(2) Charge refrigerant into system.

After charging refrigerant, test operation of air conditioning system.

8) Connect both IN and OUT heater hoses.
9) Install radiator ASSY.
- Radiator
- Radiator hoses (IN and OUT), reservoir hose
- Oil cooler hoses (IN and OUT) (A/T)
- Radiator fan shroud
- Condenser fan shroud

Tightening torque:
Radiator mounting bolt:
10 – 18 N·m (1.0 – 1.8 kg-m, 7 – 13 ft-lb)
Radiator fan shroud bolt:
7.3 – 7.7 N·m (0.74 – 0.79 kg-m, 5.4 – 5.7 ft-lb)
Condenser fan shroud bolt:
5 – 10 N·m (0.5 – 1.0 kg-m, 3.6 – 7.2 ft-lb)

10) Fill cooling system with coolant.
11) Install air cleaner element, upper case and air intake boot.
12) Connect air flow meter connector.
13) Connect accelerator cable and adjust its tension using adjusting nut.

a. Be careful not to bend the cable bracket.
b. Check to be sure that throttle lever opens to full-throttle.

14) Connect cruise control cable. (Cruise control model)
15) Connect hill-holder cable to clutch release fork. (M/T)

After connecting, test operation of hill-holder on an upgrade.

16) Connect the following hoses.
- Fuel hoses (delivery, return and evaporation lines)
- Canister hoses and hose bracket
- Brake booster vacuum hose
- Diff. lock vacuum hoses (M/T Full-Time 4WD)

17) Connect the following harness connectors and hold with clips where necessary.
- Engine wiring harness connectors
- O_2 sensor connector
- By-pass air control valve connector
- High-tension cord
- Distributor connector (to crank sensor)
- Alternator connector and terminal
- Compressor connector (A/C)
- Pulser coil connector (A/C)
- Engine ground terminal
- Radiator fan motor connector
- Thermo switch connector
- Condenser fan motor connector (A/C)

18) Connect ground cable to battery terminal and engine side.
19) Check and correct coolant and oil levels.

Use only genuine SUBARU coolant and recommended oil.

Transmission

REMOVAL

1) Open front hood and support with a stay.

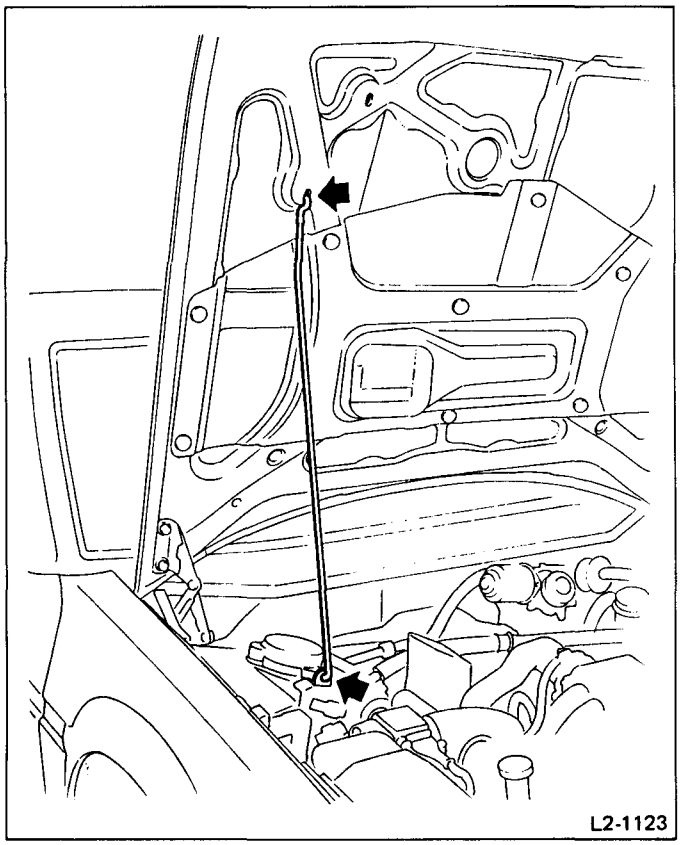

Fig. 27

2) Disconnect ground cable from battery and transmission side.

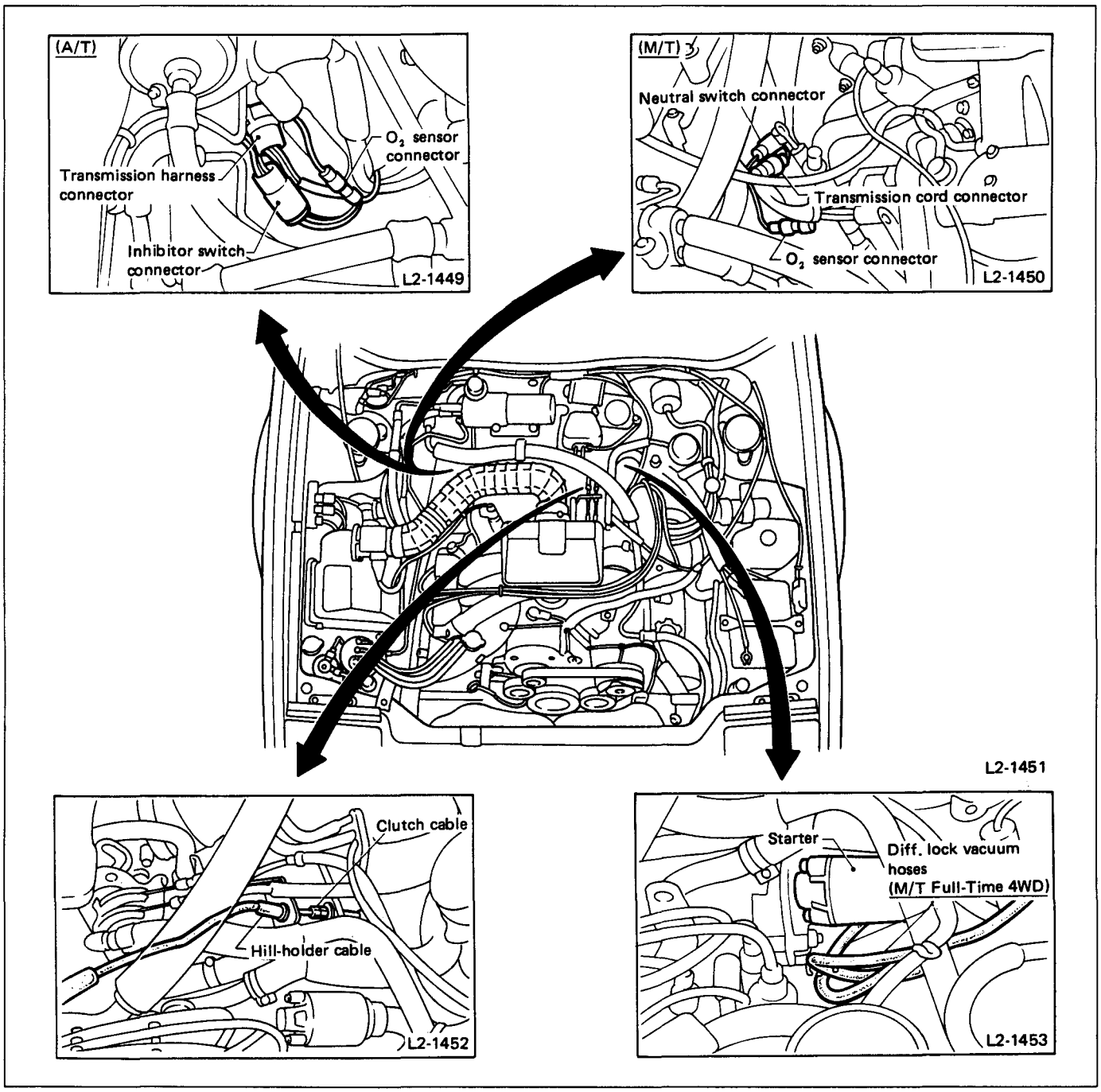

Fig. 28

3) Remove clutch cable and hill-holder cable. (M/T)
4) Remove meter cable.
5) Disconnect the following harness connectors.
   (A/T)
   - O_2 sensor connector
   - Transmission harness connector
   - Inhibitor switch connector
   - Revolution sensor connector (4WD)

   (M/T)
   - O_2 sensor connector
   - Neutral switch connector
   - Transmission cord connector (back-up and diff. lock indicator light switch) (Full-Time 4WD)
6) Disconnect the following hoses.
   - Diff. lock vacuum hose (M/T Full-Time 4WD)

Remove clip band which secures air breather hose to pitching stopper in advance. (A/T)

7) Remove starter from transmission case.
8) Remove air intake boot.

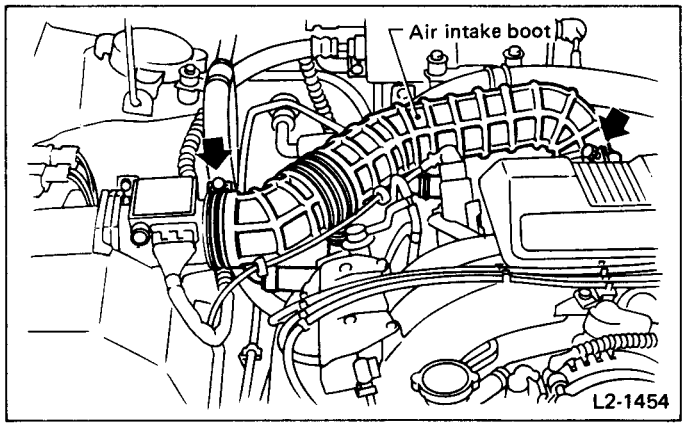

Fig. 29

9) Remove timing hole plug and four torque converter attaching bolts. (A/T)

Be careful not to slip wrench off bolt. It may strike and damage bolt head.

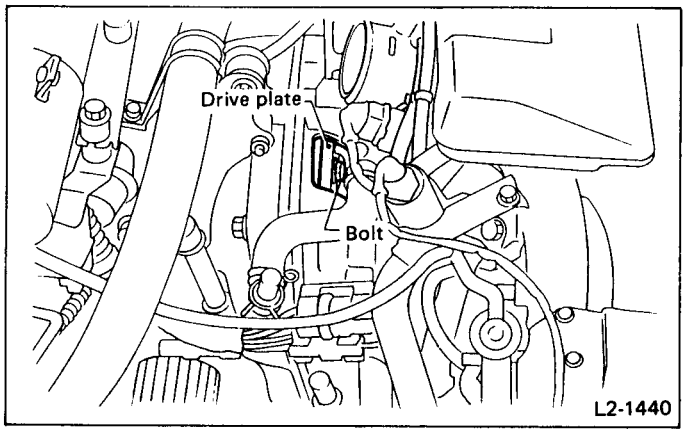

Fig. 30

10) Disconnect pitching stopper rod from bracket.

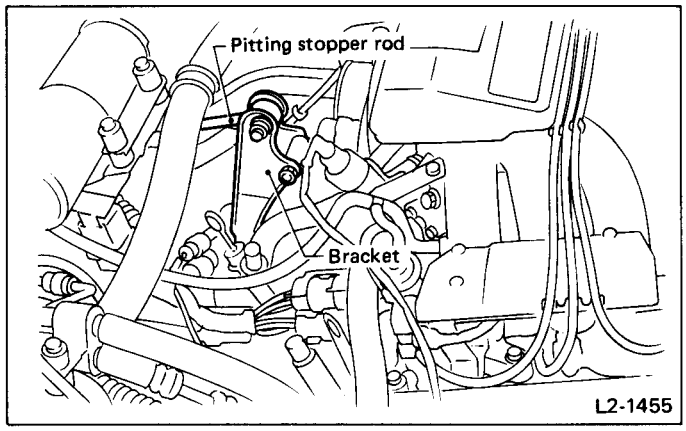

Fig. 31

11) Remove engine-to-transmission mounting bolt on the right side.

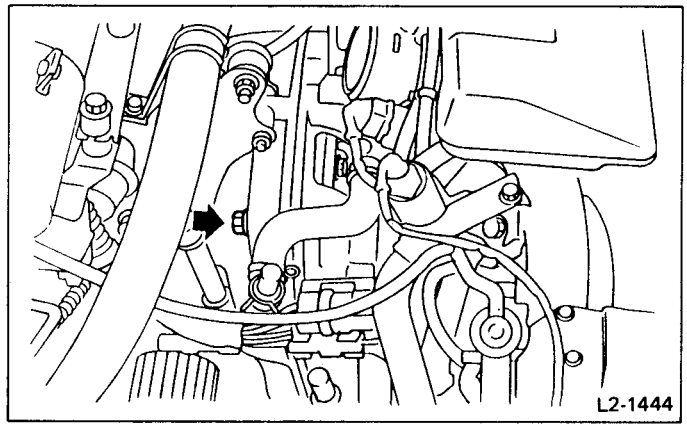

Fig. 32

12) Set the special tool.
(1) Raise the car.
(2) Remove buffer rod from engine and body side bracket.
(3) Install ENGINE SUPPORT BRACKET (927160000) to the body side bracket of buffer rod ASSY.
(4) Install ENGINE SUPPORT (927150000).

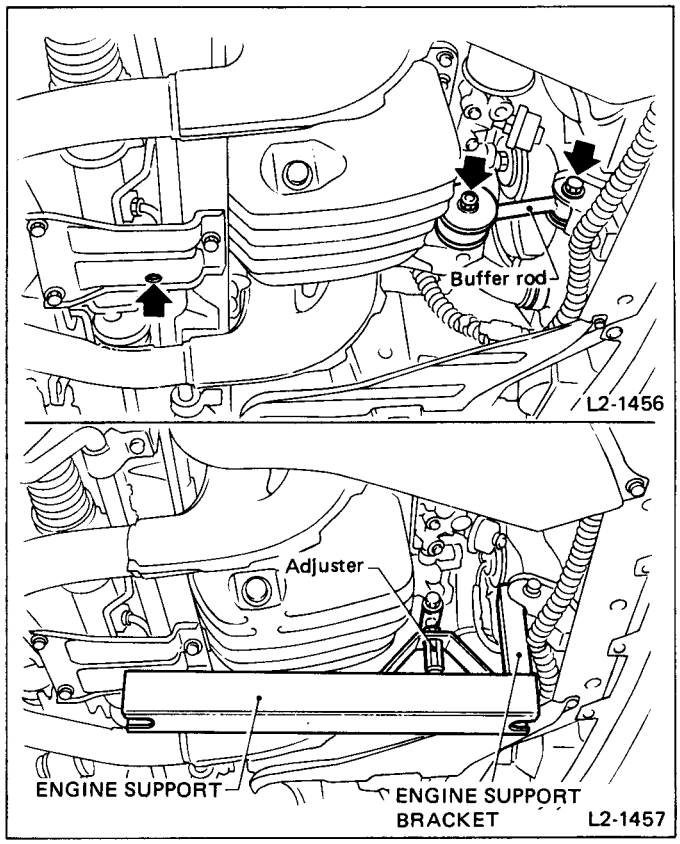

Fig. 33

Before attaching ENGINE SUPPORT to ENGINE SUPPORT BRACKET and front crossmember, connect adjuster to buffer rod ASSY bracket (on engine side).

13) Remove front exhaust pipe.
(1) Disconnect front exhaust pipe from engine.

Remove all nuts except one. (This nut is used to temporarily hold exhaust pipe.)

(2) Disconnect front-to-rear exhaust pipe connection.
(3) Disconnect front exhaust pipe at transmission and hanger locations.
(4) Remove the nut which was used to temporarily hold exhaust pipe in step (1) above, and disconnect front exhaust pipe.

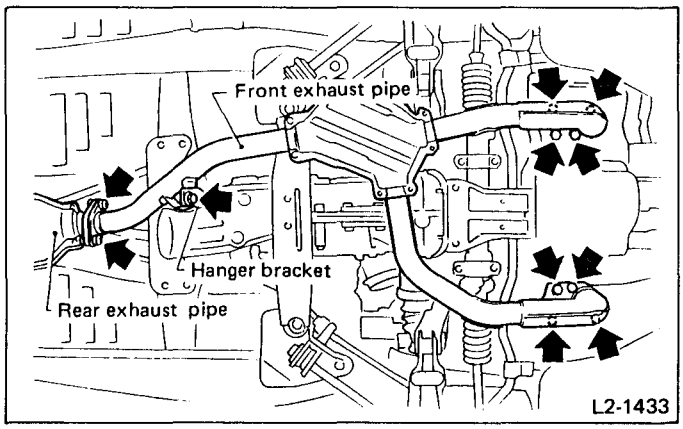

Fig. 34

14) Remove propeller shaft. (4WD)

a. Before removing propeller shaft, scribe alignment marks on connections of rear differential companion flange and propeller shaft.
b. Plug the opening at rear of extension to prevent oil from flowing out.

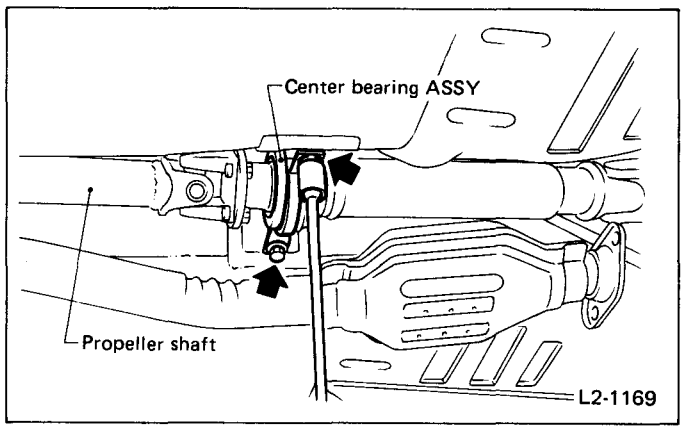

Fig. 35 - ①

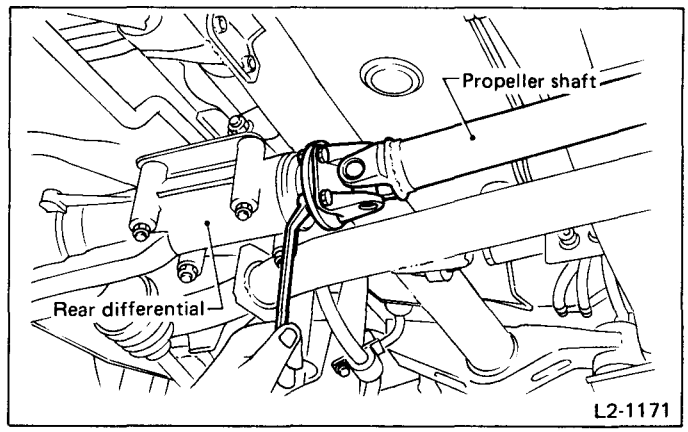

Fig. 35 - ②

15) Remove gear shift system, as follows:
(M/T)
(1) Remove spring.
(2) Disconnect stay CP from transmission.
(3) Disconnect rod CP from transmission.
(A/T)
(1) Disconnect cable from select lever.
(2) Loosen nut which holds cable to bracket.
(3) Disconnect cable while moving inhibitor switch to 2nd position.

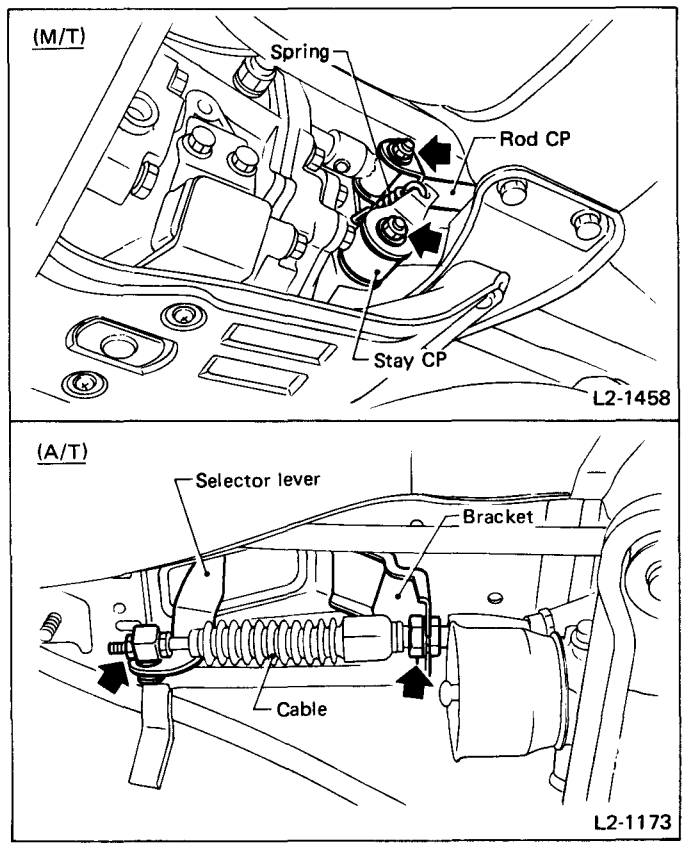

Fig. 36

16) Disconnect axle shaft from drive shaft on each side.
(1) Loosen upper bolt and nut from plate which secures transverse link to stabilizer, and remove lower bolt. Separate transverse link and stabilizer.

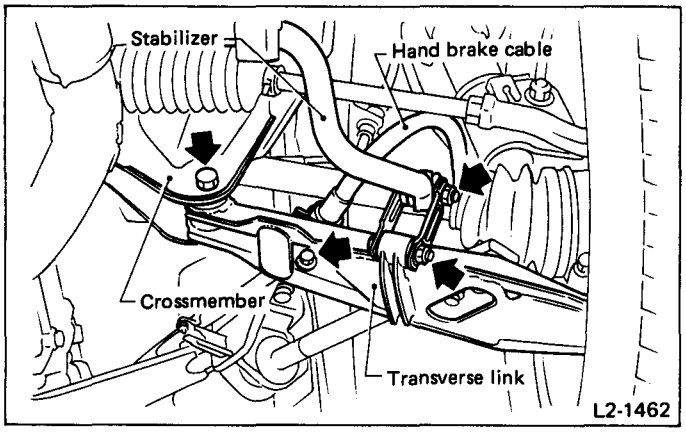

Fig. 37

(2) Remove hand brake cable bracket from transverse link.
(3) Remove bolt holding transverse link to crossmember on each side.
(4) Lower transverse link.
(5) Remove spring pin and separate axle shaft from drive shaft on each side.

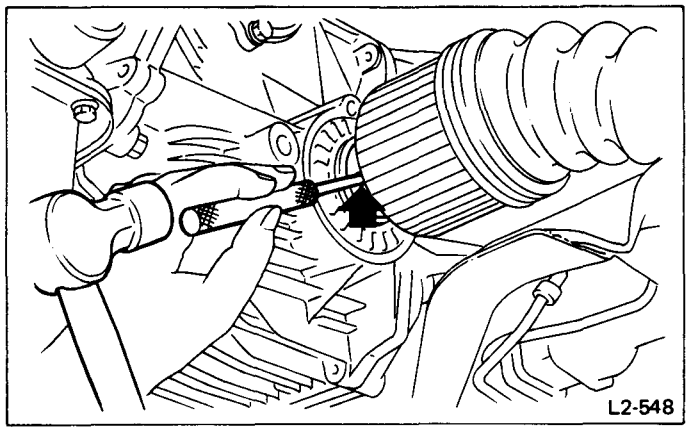

Fig. 38

a. Use REMOVER 2 (398791700) to remove spring pin.
b. Discard old spring pin and install new one.
c. Be sure to remove axle shaft from drive shaft by pushing the rear of tire outward.

17) Remove engine-to-transmission mounting nuts.

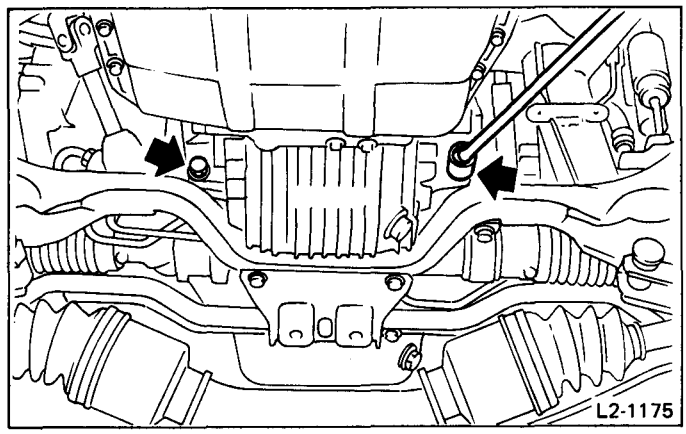

Fig. 39

18) Disconnect oil cooler hoses. (A/T)

Place a container to catch oil.

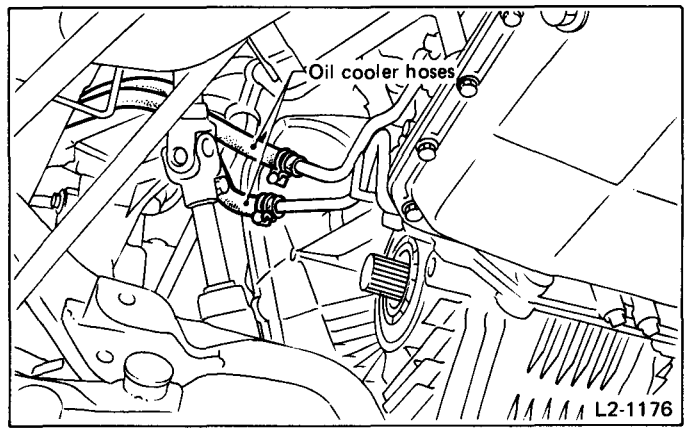

Fig. 40

19) Place transmission jack under transmission.

Always support transmission case with a transmission jack. Do not place support under oil pan; otherwise oil pan may be damaged. (A/T)

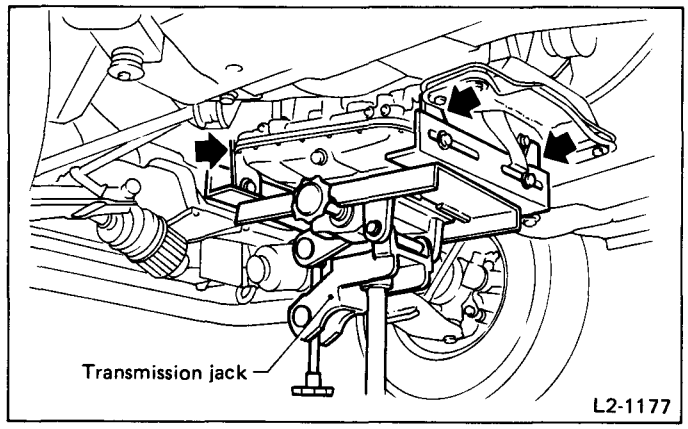

Fig. 41

20) Remove rear cushion rubber mounting nuts, and rear crossmember.

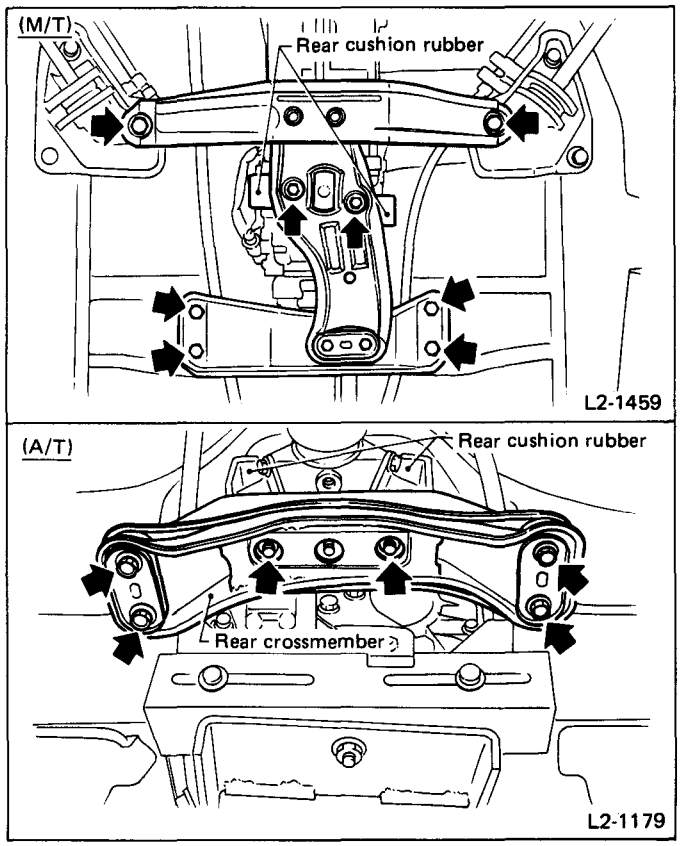

Fig. 42

21) Turn ENGINE SUPPORT adjuster counterclockwise to raise the front of engine slightly.

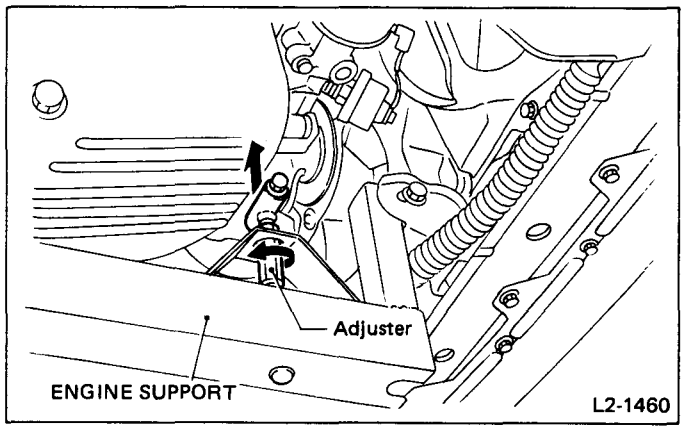

Fig. 43

22) Remove transmission.

a. Move transmission jack toward rear until mainshaft is withdrawn from clutch cover. (M/T)
b. Move torque converter and transmission as a unit away from the engine. (4A/T)

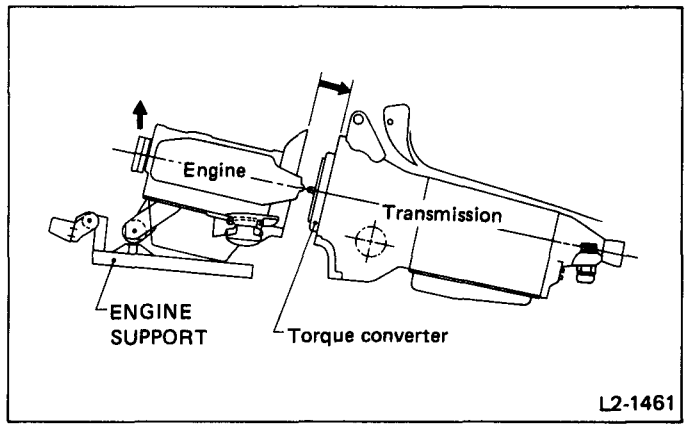

Fig. 44

INSTALLATION

1) Install transmission to engine and temporarily tighten engine-to-transmission mounting nuts.

a. Gradually raise transmission with a transmission jack until mainshaft is aligned with clutch disc at their splines. Engage them at splines. If they are not aligned properly, rotate crankshaft as required. (M/T)
b. Be sure not to strike mainshaft against clutch cover. (M/T)

2) Install rear crossmember to rear cushion rubber.

Align rear cushion rubber guide with rear crossmember guide hole and tighten nuts. (A/T)

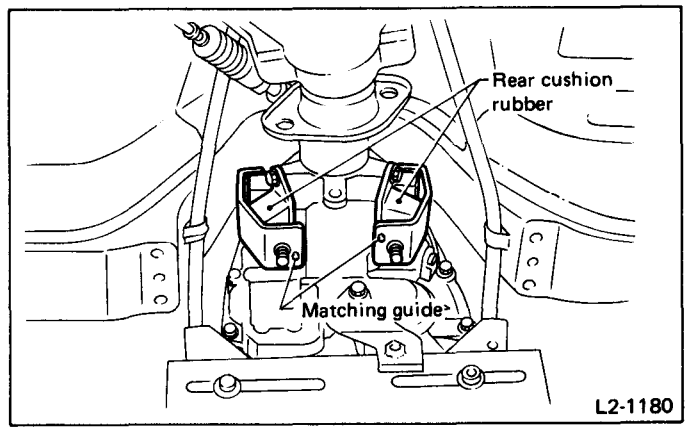

Fig. 45

Tightening torque (Cushion rubber nut):
(A/T FWD):
13 – 23 N·m (1.3 – 2.3 kg-m, 9 – 17 ft-lb)
(A/T 4WD, M/T):
27 – 47 N·m (2.8 – 4.8 kg-m, 20 – 35 ft-lb)

3) Install rear crossmember to car body.

Be careful not to damage threads.

Tightening torque (Rear crossmember bolt):
(A/T)
53 – 67 N·m (5.4 – 6.8 kg-m, 39 – 49 ft-lb)
(M/T)
(Front):
88 – 118 N·m (9.0 – 12.0 kg-m, 65 – 87 ft-lb)
(Rear):
37 – 67 N·m (3.8 – 6.8 kg-m, 27 – 49 ft-lb)

4) Tighten engine-to-transmission nuts on the lower side.

Tightening torque:
46 – 54 N·m (4.7 – 5.5 kg-m, 34 – 40 ft-lb)

5) Remove transmission jack.
6) Remove ENGINE SUPPORT and ENGINE SUPPORT BRACKET, and install buffer rod to brackets.
7) Install axle shaft to axle drive shaft and drive spring pin into place.

a. Use new spring pin.
b. Be sure to align two shafts at chamfered holes and engage shaft splines.

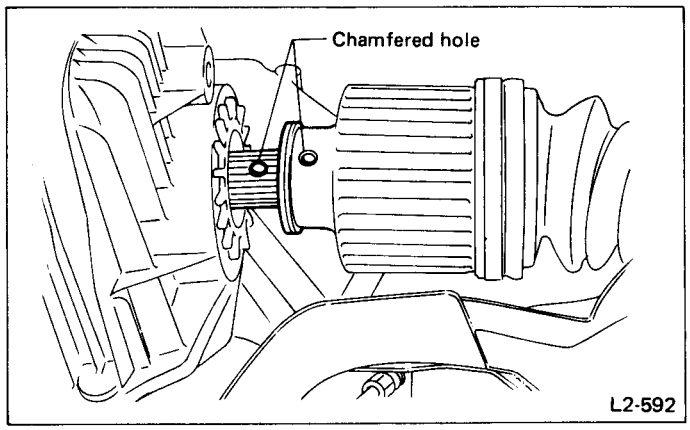

Fig. 46

8) Install transverse link temporarily to front crossmember by using bolt and self-locking nut.

a. Align bolt holes using a cross-head screwdriver, insert bolt into holes from the front side.
b. Use new self-locking nut.

9) Temporarily install stabilizer to transverse link.
10) Install hand brake cable bracket to transverse link.

Tightening torque:
10 – 16 N·m (1.0 – 1.6 kg-m, 7 – 12 ft-lb)

11) Lower car to floor.
12) Tighten transverse link-to-front crossmember mounting bolt, transverse link-to-stabilizer mounting bolt.

Tighten nuts with the tires placed on the ground when the vehicle is not loaded.

Tightening torque:
Transverse link to front crossmember (self-locking nut):
59 – 69 N·m (6.0 – 7.0 kg-m, 43 – 51 ft-lb)
Transverse link to stabilizer:
20 – 29 N·m (2.0 – 3.0 kg-m, 14 – 22 ft-lb)

13) Raise car.
14) Install gear shift system.
(M/T)
(1) Connect rod CP to transmission.
(2) Install spring.
(3) Connect stay CP to transmission.
(A/T)
(1) Tighten nut which holds cable to bracket.
(2) Connect cable to select lever.

When connecting table to select lever, set the location of the select lever and inhibitor switch to "N".

Tightening torque:
Rod CP (M/T)
9 – 15 N·m (0.9 – 1.5 kg-m, 6.5 – 10.8 ft-lb)
Stay CP (M/T)
14 – 22 N·m (1.4 – 2.2 kg-m, 10 – 16 ft-lb)
Cable to bracket (A/T)
13 – 23 N·m (1.3 – 2.3 kg-m, 9 – 17 ft-lb)
Cable to select lever (A/T)
10 – 18 N·m (1.0 – 1.8 kg-m, 7 – 13 ft-lb)

After completion of the fitting, make sure that the lever operates smoothly all across the operating range. (A/T)

15) Install propeller shaft. (4WD)

Align marks and connect propeller shaft to rear differential.

Tightening torque:
Propeller shaft to rear differential
24 – 32 N·m (2.4 – 3.3 kg-m, 17 – 24 ft-lb)
Center bearing location
34 – 44 N·m (3.5 – 4.5 kg-m, 25 – 33 ft-lb)

16) Connect oil cooler hoses. (A/T)
17) Connect engine and transmission, and tighten bolt on the right side.

Tightening torque:
46 – 54 N·m (4.7 – 5.5 kg-m, 34 – 40 ft-lb)

18) Install starter.

Tightening torque:
Upper bolt:
46 – 54 N·m (4.7 – 5.5 kg-m, 34 – 40 ft-lb)
Lower nut:
30 – 36 N·m (3.1 – 3.7 kg-m, 22 – 27 ft-lb)

19) Install pitching stopper.

Tightening torque
Transmission side:
44 – 54 N·m (4.5 – 5.5 kg-m, 33 – 40 ft-lb)

20) Install and tighten torque converter mounting bolts. (A/T)
(1) Align torque converter with drive plate at mounting holes.
(2) While manually cranking engine, tighten torque converter-to-drive plate mounting bolts securely – one at a time.

Be careful not to drop bolts into torque converter housing.

Tightening torque:
23 – 26 N·m (2.3 – 2.7 kg-m, 17 – 20 ft-lb)

(3) Install timing hole plug.
21) Install air intake boot.
22) Connect the following hoses.
- Diff. lock vacuum hose (M/T Full-Time 4WD)

Secure air breather hose to pitching stopper with a clip band.

23) Connect the following harness connectors.
(A/T)
- O_2 sensor connector
- Transmission harness connector
- Inhibitor switch connector
- Revolution sensor connector (4WD)

(M/T)
- O_2 sensor connector
- Neutral switch connector
- Back-up light switch connector (FWD)
- Transmission cord connector (back-up and diff. lock indicator light switch) (Full-Time 4WD)

24) Connect meter cable.

Manually tighten cable nut all the way and then turn it approximately 30° more with a wrench.

25) Connect clutch cable and hill-holder cable. (M/T)

After connecting, test operation of hill-holder on an upgrade.

26) Install front exhaust pipe.

a. Be sure to use new gasket.
b. Position front exhaust pipe in hanger bracket, and align it with adjacent parts.
c. Tighten all parts in numerical sequence, as shown in figure below, to specified torque.

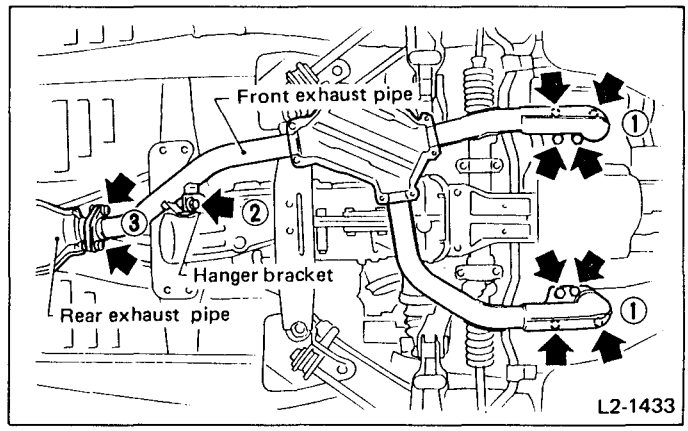

Fig. 47

Tightening torque:
Front exhaust pipe to engine:
25 – 29 N·m (2.6 – 3.0 kg-m, 19 – 22 ft-lb)
Front exhaust pipe to bracket:
25 – 34 N·m (2.6 – 3.5 kg-m, 19 – 25 ft-lb)
Front exhaust pipe to rear exhaust pipe:
13 – 23 N·m (1.3 – 2.3 kg-m, 9 – 17 ft-lb)

Also check to be sure there is no gas leakage after installation is completed.

27) Connect ground cable to battery and transmission side.
28) Check transmission oil level.
Add gear oil if necessary.
29) Check ATF with engine idling.
If lower than the specified level, stop engine and add ATF.
(A/T)
30) Start engine and re-check oil levels.

MANUAL TRANSMISSION AND DIFFERENTIAL

3-1

SUBARU

1988

	Page
MECHANISM AND FUNCTION	2
Cross Sectional View	2
Reverse Check Mechanism	3
Full-Time 4WD	4
SPECIFICATIONS AND SERVICE DATA	9
COMPONENT PARTS	14
SERVICE PROCEDURE	27
Selective 4WD	27
Full-Time 4WD	49
FWD	66
TROUBLESHOOTING	80

MECHANISM AND FUNCTION

Cross Sectional View

FWD

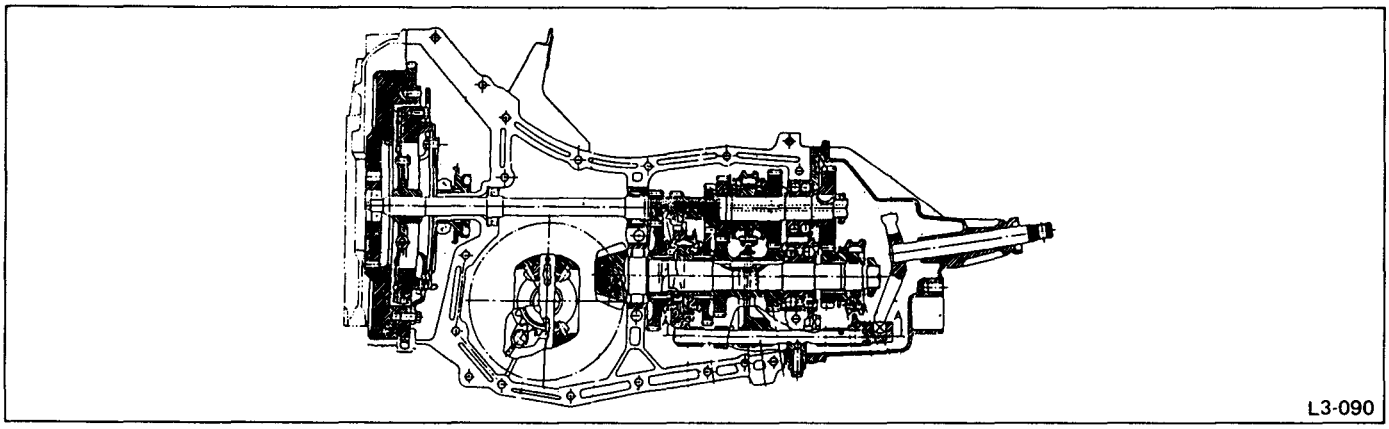

Fig. 1

4WD

- **Selective 4WD (Single-range)**

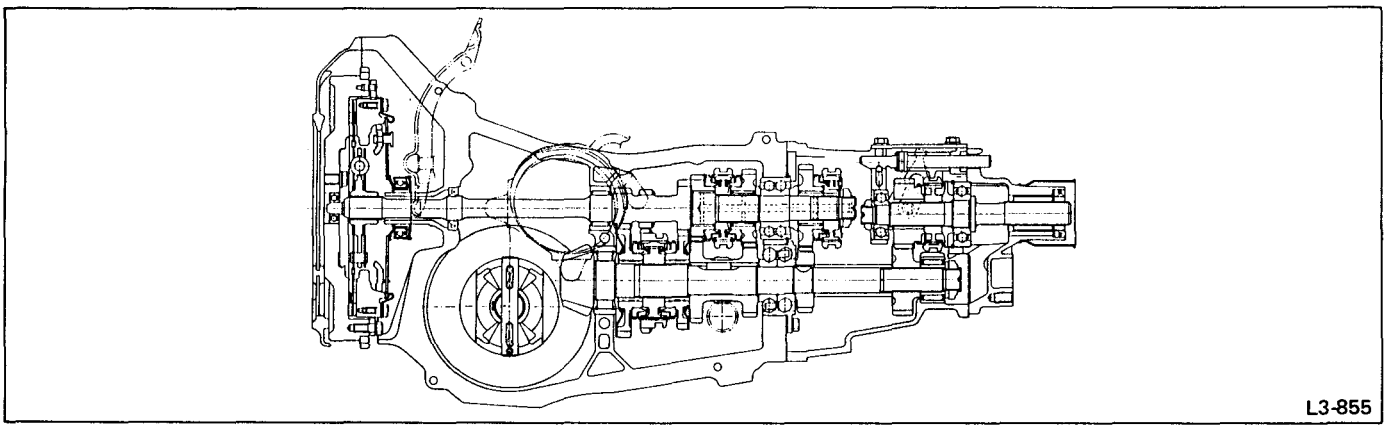

Fig. 2

- **Full-Time 4WD (Single-range)**

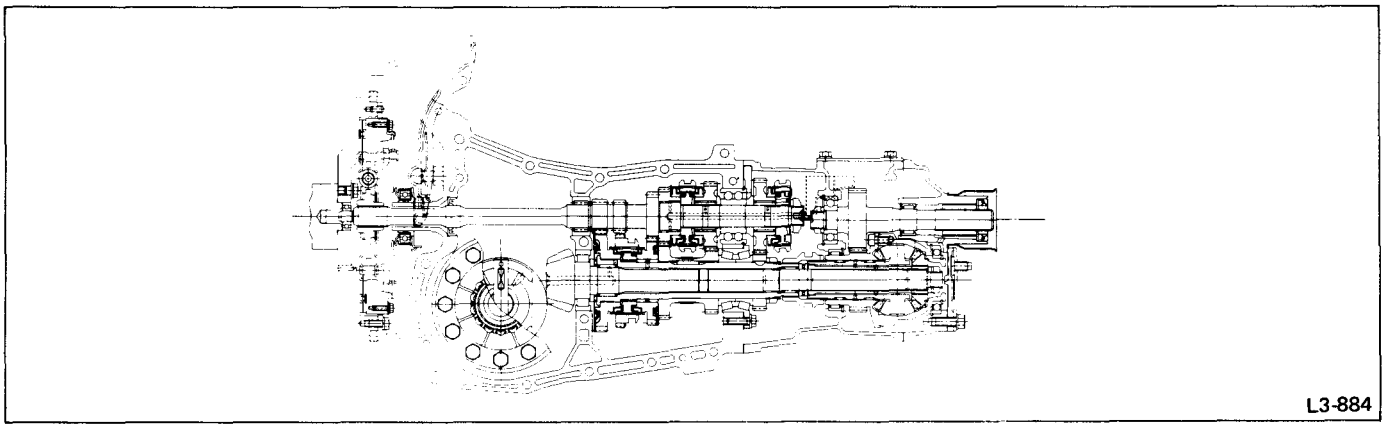

Fig. 3

Reverse Check Mechanism

COMPONENT PARTS

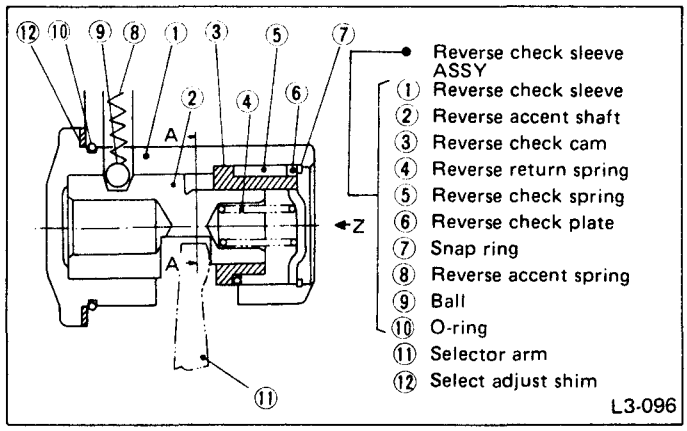

Fig. 4

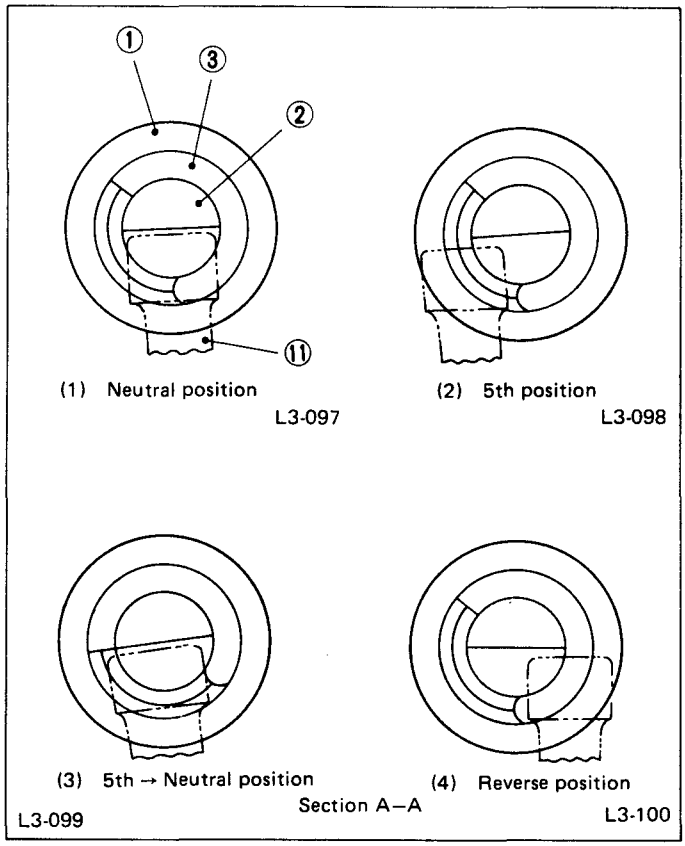

Fig. 5

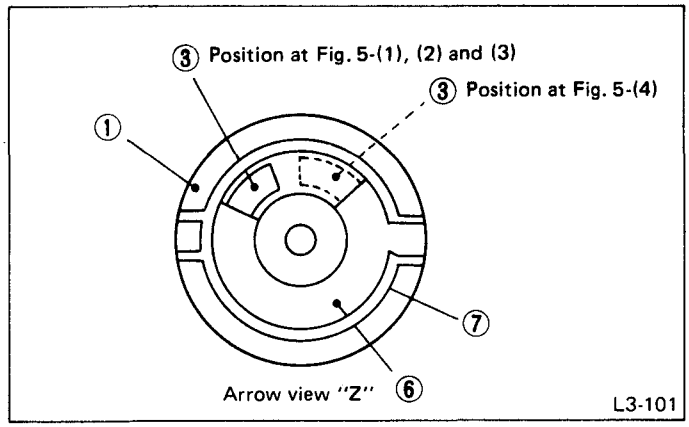

Fig. 6

CONSTRUCTION

- The sleeve ① is bolted to the transmission case. The shaft ② is inserted in the sleeve ①. On the smaller-diameter side (right side in Fig. 4) of this shaft ②, the cam ③ is loosely mounted so that it can rotate, and the sleeve ① holds the cam in place with its stepped part.
  The spring ④, which is inserted in the shaft ② presses the shaft to the left. Further, the spring ⑤ is placed in between the cam ③ and sleeve ①, which forces the cam ③ to the left and in the direction of rotation. Both springs are held down with the plate ⑥ that is attached to the sleeve ① with the snap ring ⑦. The shaft ② has a groove for reverse accent, in which the ball ⑨ and spring ⑧ are put through a hole drilled in the sleeve ①.

OPERATION

- As shown in Fig. 5, the sleeve ① and shaft ② have a notch, and the arm ⑪ is placed between the notches. The position of the arm ⑪ shown in Fig. 4 is the neutral position (hereafter referred to as Ⓝ position). The point where the arm stops when moved to the left is the 1st and 2nd position. Opposite this, the point where the arm stops when moved to the right is the 5th and reverse position.
  Fig. 5 shows the section A-A in Fig. 4, and Fig. 6 the view Z in Fig. 4.

1) When 5th and reverse side is selected

The arm ⑪ pushes the shaft ② and cam ③ simultaneously and moves to the 5th and reverse side, as shown in [Fig. 5-(1)].

2) When shift is made to 5th

As shown in [Fig. 5-(2)], the arm ⑪ moves to the 5th side pushing the shaft ②. When the arm ⑪ pulls out of the cam ③, the cam is returned to the original position by the spring ⑤.

3) When shift is made from 5th to reverse

As shown in [Fig. 5-(3)], the arm ⑪ moves to the reverse side pushing the shaft ② and runs against the cam ③ that has already returned. The cam ③ has, as shown in [Fig. 6], a stopper, which hits against the plate ⑥. Thus, the cam ③ cannot rotate further. Accordingly, the arm ⑪ comes to a

stop at a point where it has turned the cam ③ to a certain degree (i.e., Ⓝ position), and the cam ③ is pushed back to the Ⓝ position by the shaft ② (i.e., the spring (④).

4) When shift is made to reverse

From the position shown in [Fig. 5-(1)], the arm ⑪ again moves to the 5th and reverse side. When the shift is made to reverse, the arm ⑪ moves to the reverse position while pushing the shaft ② and cam ③ together.

Full-Time 4WD

CONSTRUCTION

1) The full-time 4WD transmission is designed on the basis of the selective 4WD model. A center differential unit and locking mechanism have been added to the rear end transfer section. The overall length of the transmission is unchanged.

2) The center differential features the reliable bevel gear design. It distributes the torque to both front and rear differentials and performs the differential action between the front and rear axle shafts.

3) In order to minimize the size of the transfer section, a triple-shaft structure with two hollow shafts is adopted. These are located at the center differential power input section and at the output section from which power is transmitted to the front and rear wheels. Major parts such as the transmission case, main shaft, front differential and others are interchangeable.

4) The center differential is equipped with a built-in mechanical locking mechanism. It is locked or unlocked by the vacuum actuator with engine vacuum when the differential lock switch on the console box inside the cabin is operated.

5) When the center differential is locked, the drive shaft is coupled directly to the front and rear wheels. This provides a maximum drive equivalent to that of the 4WD mode of the selective 4WD model.

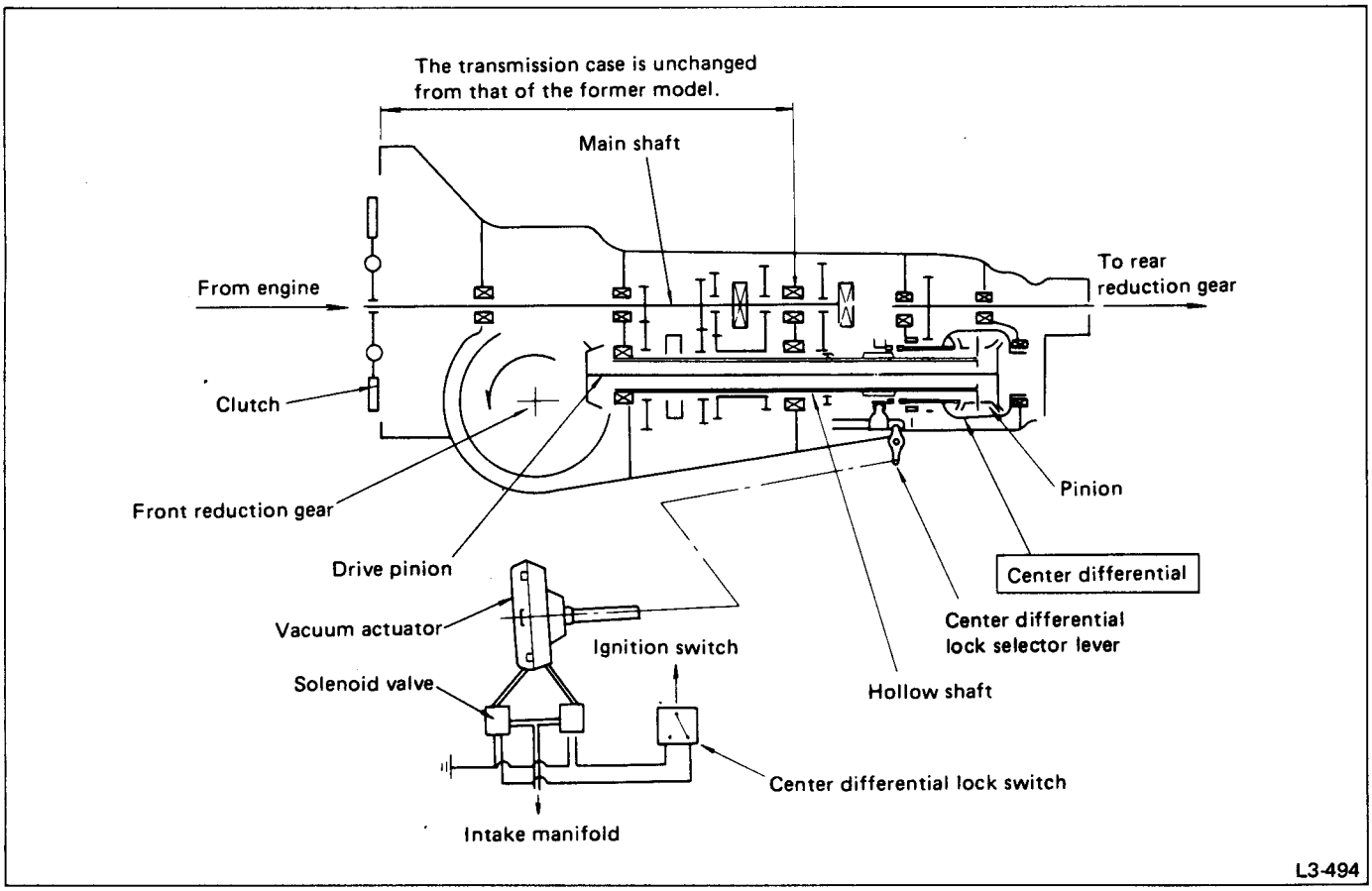

Fig. 7

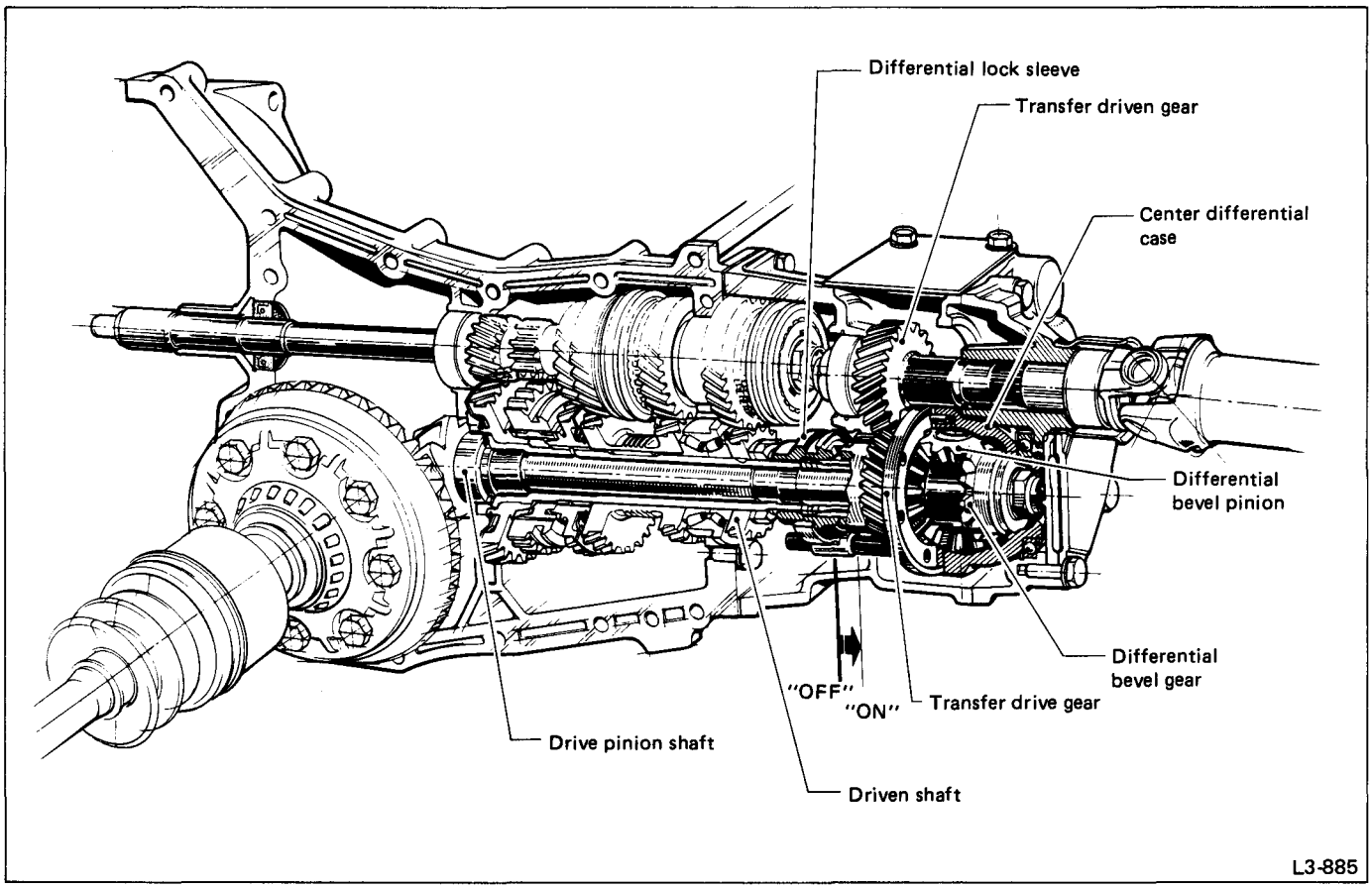
Differential lock sleeve
Transfer driven gear
Center differential case
Differential bevel pinion
Differential bevel gear
"OFF"
"ON"
Transfer drive gear
Drive pinion shaft
Driven shaft
L3-885

Fig. 8

OPERATION OF CENTER DIFFERENTIAL AND POWER TRANSMITTING MECHANISM

1) Engine torque is transmitted to the clutch and main shaft. It is then transmitted to the hollow driven shaft after being multiplied by the respective speed gears.

2) The rear end of the hollow driven shaft is coupled directly to the pinion of the center differential via the pinion shaft, and torque is transmitted equally to the front and rear final drives. Any difference in rotating speed between the front and rear wheels is absorbed through the action of this differential unit.

3) The torque or driving force thus transmitted and distributed is then transferred to the axle shafts and tires via the front and rear final drives.

4) When the car is going straight ahead, the drive pinion and transfer drive gear rotate as a unit. When making a turn, tight corner braking is avoided by the action of the center differential.

Power transmission when the car is going straight ahead (When driving in 5th gear)

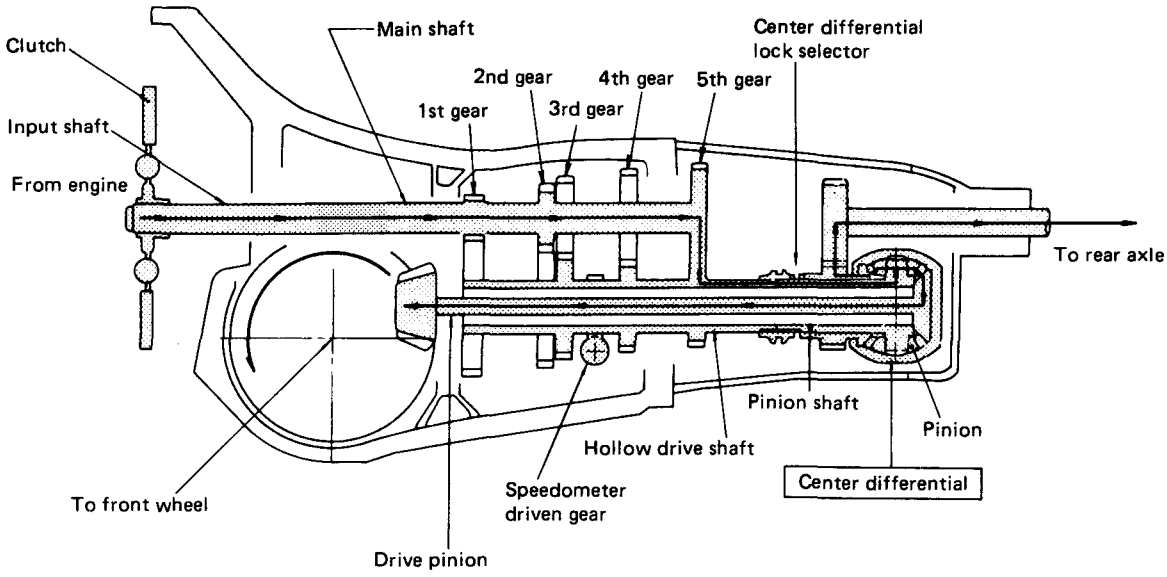

Power from the engine is transmitted as follows:

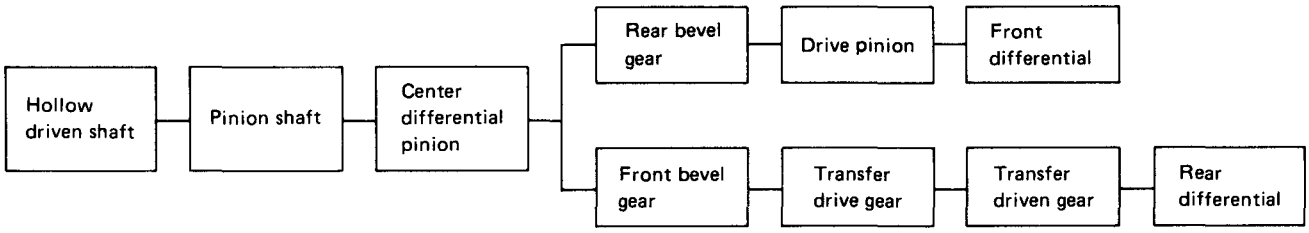

L3-496

Fig. 9

Power transmission when front wheel or rear wheel is locked (when driving in 5th gear)

Power is transmitted as follows:

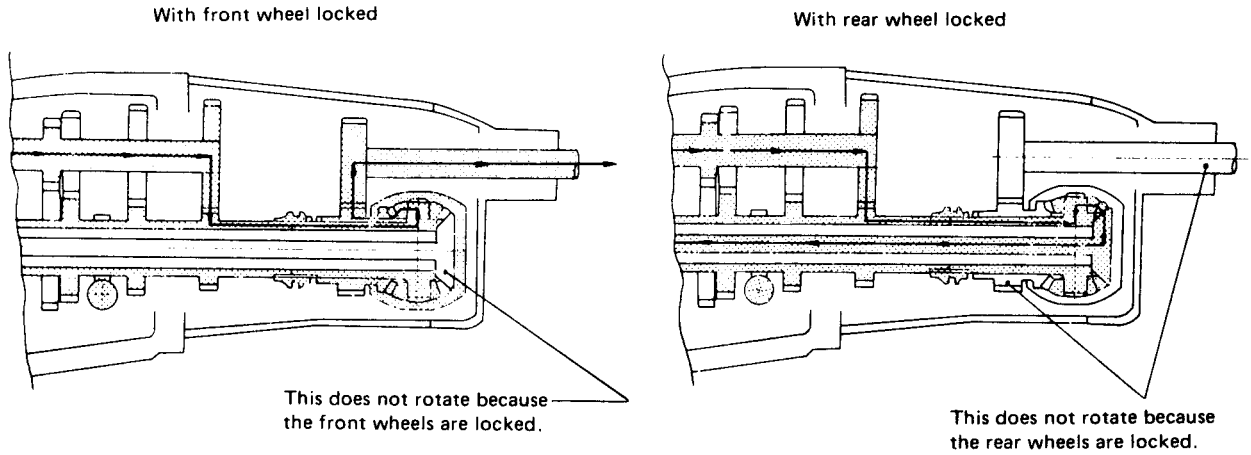

In either case, the output shaft is driven at a speed twice that of the hollow input shaft.

L3-327

Fig. 10

5) When the center differential lock switch is operated and the center differential lock is activated, the differential gear coupled to the front and rear drive shafts does not function. If the front or the rear wheel slips, torque is transmitted to the remaining wheel by the center differential lock, so that the car can maneuver off the slippery surface, or get out of mud. The suction vacuum of the engine is utilized to activate the vacuum actuator to changeover the locking mechanism.

Operation of differential lock

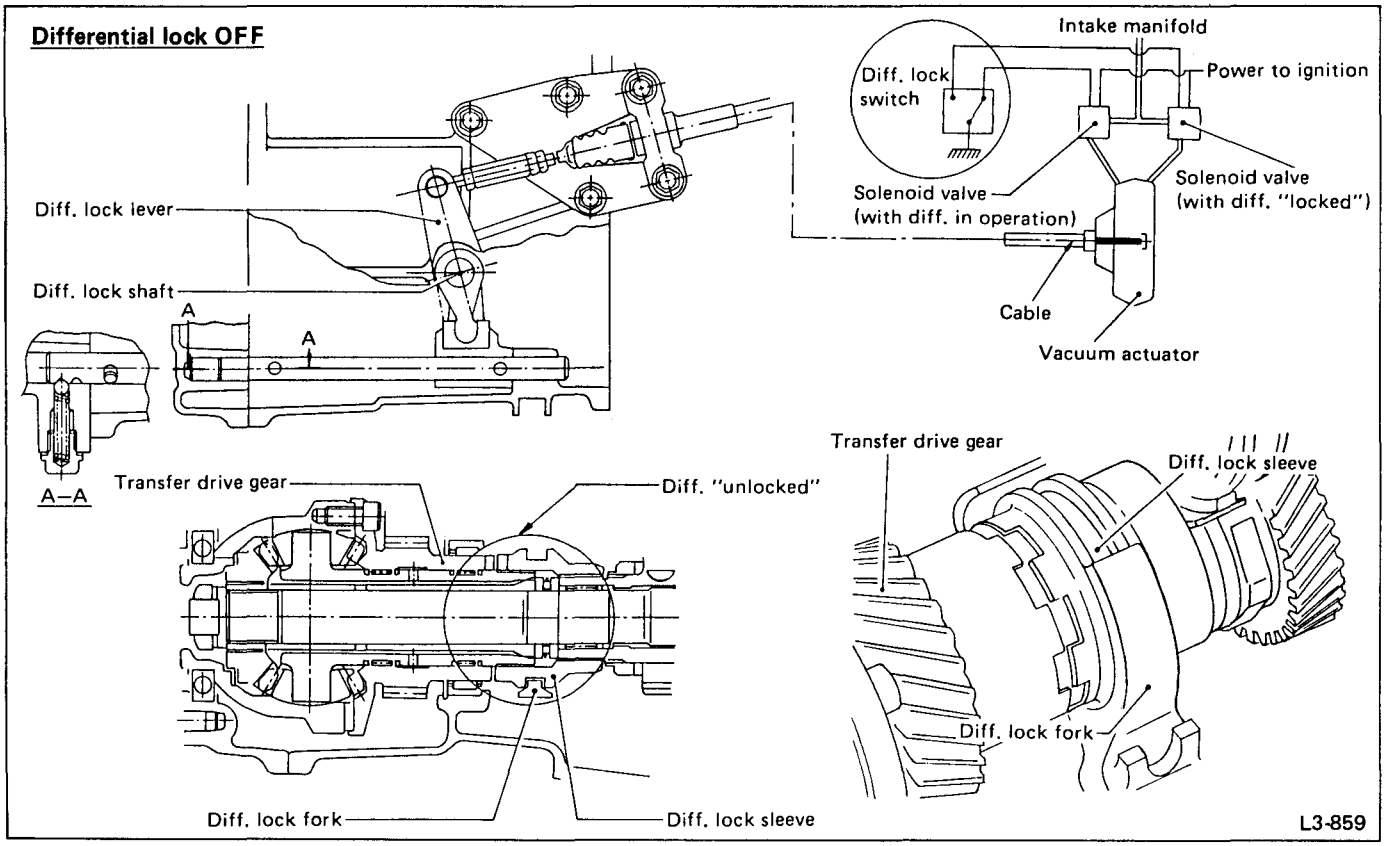

Fig. 11

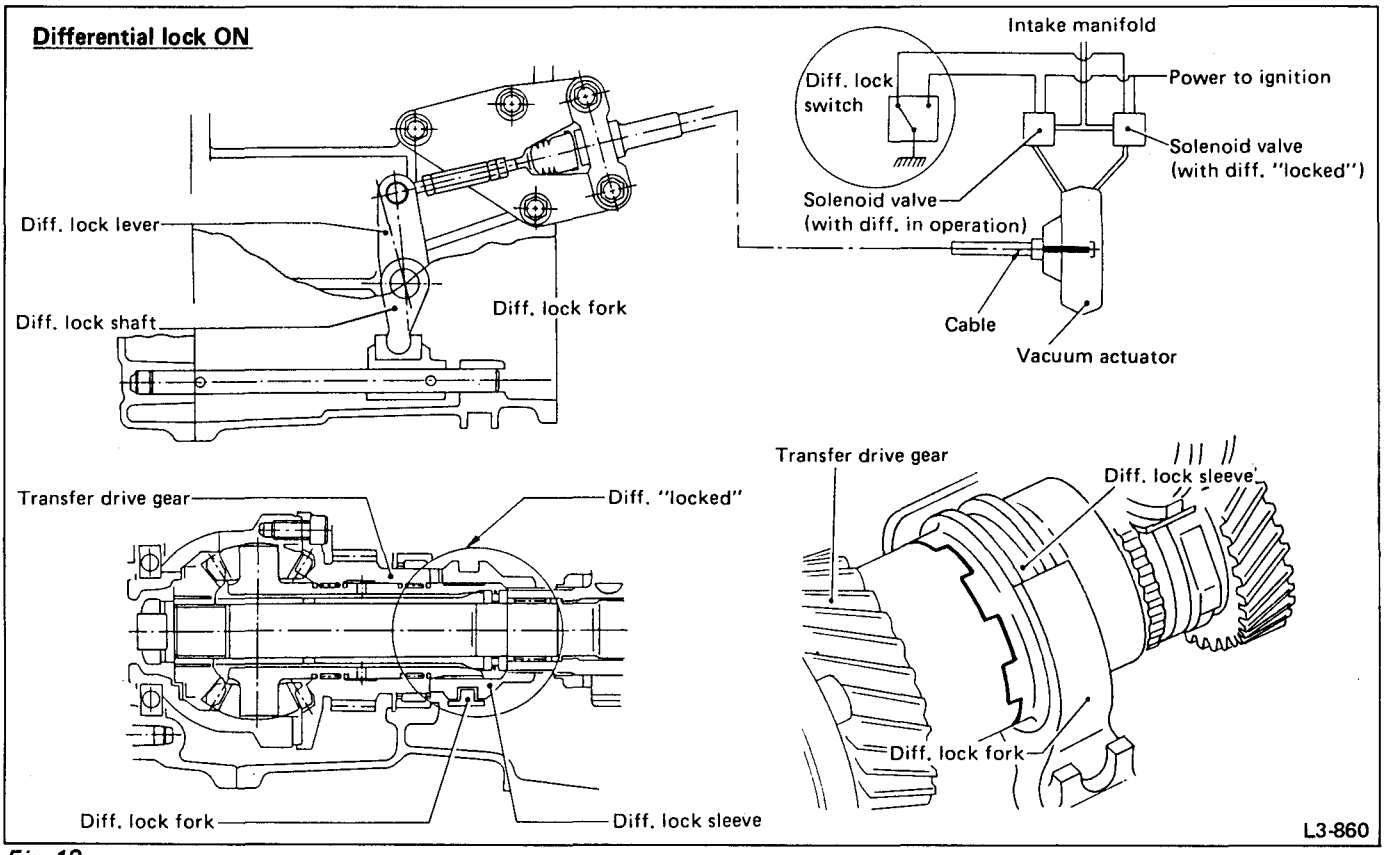

Fig. 12

SPECIFICATIONS AND SERVICE DATA

SPECIFICATIONS

			FWD	4WD	
				Selective 4WD, S/R	Full-time 4WD, S/R
Type			5-forward speeds with synchromesh and 1-reverse		
Transmission gear ratio (Tooth number of gear)		1st	3.636 (40/11)	3.545 (39/11)	3.545
		2nd	2.105 (40/19)	2.111 (38/11)	1.947
		3rd	1.428 (40/28)	1.448 (42/29)	1.366
		4th	1.093 (35/32)	1.088 (37/34)	0.972
		5th	0.885 (31/35)	0.871 (34/39)	0.780
		Reverse	3.583 (43/23/12)	3.416 (41/26/12)	3.416
Front reduction gear	Final	Type of gear	Hypoid		
		Gear ratio (Tooth number of gear)	3.700 (37/10)		3.900
Rear reduction gear	Transfer	Type of gear	–	Helical	
		Gear ratio (Tooth number of gear)	–	1.000 (34/34)	
	Final	Type of gear	–	Hypoid	
		Gear ratio (Tooth number of gear)	–	3.700 (37/10)	3.900 (39/10)
Front differential	Type and number of gear		Straight bevel gear (Bevel pinion: 2, Bevel gear: 2)		
	Tooth number	Bevel gear	14		
		Bevel pinion	10		
Center differential	Type and number of gear		–		Straight bevel gear (Bevel pinion: 2, Bevel gear : 2)
	Tooth number	Bevel gear	–		14
		Bevel pinion	–		10
Rear differential	Type and number of gear		–	Straight bevel gear (Bevel pinion: 2, Bevel gear: 2)	
	Tooth number	Bevel gear	–	14	
		Bevel pinion	–	10	
Transmission oil capacity			2.6ℓ (2.7 US qt, 2.3 Imp qt)	3.3ℓ (3.5 US qt, 2.9 Imp qt)	3.5ℓ (3.7 US qt, 3.1 Imp qt)
Rear differential gear oil capacity			–	0.8ℓ (1.7 US pt, 1.4 Imp pt)	

SERVICE DATA

4WD

DIFFERENTIAL ASSEMBLY

Bevel gear to pinion backlash
0.13 – 0.18 mm (0.0051 – 0.0071 in)

Washer (38.1 x 50 x t)			
Part No.	Thickness mm (in)	Part No.	Thickness mm (in)
803038021	0.925 – 0.950 (0.0364 – 0.0374)	803038023	1.025 – 1.050 (0.0404 – 0.0413)
803038022	0.975 – 1.000 (0.0384 – 0.0394)		

Pinion shaft to axle drive shaft clearance
0 – 0.2 mm (0 – 0.008 in)

Snap ring (Outer-28)			
Part No.	Thickness mm (in)	Part No.	Thickness mm (in)
805028011	1.05 (0.0413)	805028012	1.20 (0.0472)

Drive pinion adjustment

Drive pinion shim			
Part No.	Thickness mm (in)	Part No.	Thickness mm (in)
32295AA030	0.150 (0.0059)	32295AA070	0.250 (0.0098)
32295AA040	0.175 (0.0069)	32295AA080	0.275 (0.0108)
32295AA050	0.200 (0.0079)	32295AA090	0.300 (0.0118)
32295AA060	0.225 (0.0089)	32295AA100	0.500 (0.0197)

REVERSE IDLER GEAR SHAFT ASSEMBLY

Adjustment of reverse idler gear CP position
Reverse idler gear CP to transmission case (LH) wall clearance
6.0 – 7.5 mm (0.236 – 0.295 in)

Reverse shifter lever CP		
Part No.	Mark	Remarks
32820AA000	0	Further from case wall
32820AA010	No mark	Standard
32820AA020	2	Closer to the case wall

FWD

DIFFERENTIAL ASSEMBLY

Bevel gear to pinion backlash
0.13 – 0.18 mm (0.0051 – 0.0071 in)

Washer (35.1 x 45 x t)			
Part No.	Thickness mm (in)	Part No.	Thickness mm (in)
803135011	0.925 – 0.950 (0.0364 – 0.0374)	803135014	1.000 – 1.025 (0.0394 – 0.0404)
803135012	0.950 – 0.975 (0.0374 – 0.0384)	803135015	1.025 – 1.050 (0.0404 – 0.0413)
803135013	0.975 – 1.000 (0.0384 – 0.0394)		

Pinion shaft to axle drive shaft clearance
0 – 0.2 mm (0 – 0.008 in)

Snap ring (Outer-26)			
Part No.	Thickness mm (in)	Part No.	Thickness mm (in)
805026010	1.05(0.0413)	031526000	1.20 (0.0472)

Drive pinion adjustment

Drive pinion shim	
Part No.	Thickness mm (in)
441967111	0.15 (0.0059)
441967112	0.175 (0.0069)
441967113	0.20 (0.0079)
441967114	0.225 (0.0089)
441967115	0.25 (0.0098)
441967116	0.275 (0.0108)
441967117	0.30 (0.0118)
441967118	0.50 (0.0197)

REVERSE IDLER GEAR SHAFT ASSEMBLY

Adjustment of reverse idler gear CP position
Reverse idler gear CP to transmission case (LH) wall clearance
1.5 – 3.0 mm (0.059 – 0.118 in)

Reverse shifter lever CP		
Part No.	Mark	Remarks
440627101	1	Further from case wall
440627102	2 or No mark	Standard
440627103	3	Closer to the case wall

4WD

After installing a suitable reverse shifter lever, adjust reverse idler gear-to-transmission case wall clearance to within 0 to 0.5 mm (0 to 0.020 in) using washers.

Washer (20.5 x 26 x t)			
Part No.	Thickness mm (in)	Part No.	Thickness mm (in)
803020151	0.4 (0.016)	803020154	1.9 (0.075)
803020152	1.1 (0.043)	803020155	2.3 (0.091)
803020153	1.5 (0.059)		

DRIVE PINION SHAFT ASSEMBLY

Select suitable shifter forks so that both coupling sleeve and reverse driven gear are positioned in the center of their synchromesh mechanisms.

1st-2nd shifter fork CP		
Part No.	Mark	Remarks
32804AA031	1	Approach to 1st gear by 0.2 mm (0.008 in)
32804AA041	No mark	Standard
32804AA051	3	Approach to 2nd gear by 0.2 mm (0.008 in)

3rd-4th shifter fork CP		
Part No.	Mark	Remarks
32810AA031 *32810AA060	1	Approach to 4th gear by 0.2 mm (0.008 in)
32810AA041 *32810AA070	No mark	Standard
32810AA051 *32810AA100	3	Approach to 3rd gear by 0.2 mm (0.008 in)

* Full-time 4WD

5th shifter fork CP		
Part No.	Mark	Remarks
32812AA005 *32812AA060	1	Approach to 5th gear by 0.2 mm (0.008 in)
32812AA015 *32812AA070	No mark	Standard
32812AA025 *32812AA100	3	Become distant from 5th gear by 0.2 mm (0.008 in)

* Full-time 4WD

Rod end clearance
A: 3rd-4th – 5th
0.6 – 1.4 mm (0.024 – 0.055 in)
B: 1st-2nd – 3rd-4th
0.5 – 1.5 mm (0.020 – 0.059 in)

FWD

After installing a suitable reverse shifter lever, adjust reverse idler gear-to-transmission case wall clearance to within 0 to 0.5 mm (0 to 0.020 in.) using washers.

Washer (15.5 x 21 x t)			
Part No.	Thickness mm (in)	Part No.	Thickness mm (in)
803015081	0.6 – 0.8 (0.024 – 0.031)	803015084	1.8 – 2.0 (0.071 – 0.079)
803015082	1.0 – 1.2 (0.039 – 0.047)	803015085	2.2 – 2.4 (0.087 – 0.094)
803015083	1.4 – 1.6 (0.055 – 0.063)		

DRIVE PINION SHAFT ASSEMBLY

Select suitable shifter forks so that both coupling sleeve and reverse driven gear are positioned in the center of their synchromesh mechanisms.

1st-2nd shifter fork CP		
Part No.	Mark	Remarks
32804AA001	1	Approach to 2nd gear 0.2 mm (0.008 in)
32804AA011	No mark	Standard
32804AA021	3	Approach to 1st gear 0.2 mm (0.008 in)

3rd-4th shifter Fork CP		
Part No.	Mark	Remarks
32810AA110	1	Approach to 4th gear by 0.4 mm (0.016 in)
32810AA120	2	Approach to 4th gear by 0.2 mm (0.008 in)
32810AA130	No mark	Standard
32810AA140	4	Approach to 3rd gear by 0.2 mm (0.008 in)
32810AA150	5	Approach to 3rd gear by 0.4 mm (0.016 in)

5th shifter fork CP		
Part No.	Mark	Remarks
32812AA032	1	Approach to gear side by 0.2 mm (0.008 in)
32812AA042	No mark	Standard
32812AA052	3	Become distant from gear side by 0.2 mm (0.008 in)

Rod end clearance
A & B: 0.3 – 1.6 mm (0.012 – 0.063 in)

4WD

PRELOAD ADJUSTMENT OF THRUST BEARING

Drive pinion spacer	
Part No.	Length mm (in)
32288AA000	121.35 ± 0.02 (4.7775 ± 0.0008)
32288AA010	121.50 ± 0.02 (4.7835 ± 0.0008)
32288AA020	121.65 ± 0.02 (4.7894 ± 0.0008)

Differential bevel gear sleeve	
Part No.	Length mm (in)
38956AA000	18.925 ± 0.01 (0.7451 ± 0.0004)
38956AA010	18.950 ± 0.01 (0.7461 ± 0.0004)
38956AA020	18.975 ± 0.01 (0.7470 ± 0.0004)
38956AA030	19.000 ± 0.01 (0.7480 ± 0.0004)
38956AA040	19.025 ± 0.01 (0.7490 ± 0.0004)
38956AA050	19.050 ± 0.01 (0.7500 ± 0.0004)
38956AA060	19.075 ± 0.01 (0.7510 ± 0.0004)

FINAL GEAR ASSEMBLY

Hypoid gear backlash:
0.13 – 0.18 mm (0.0051 – 0.0071 in)

TRANSFER CASE ASSEMBLY

Main shaft rear plate		
Dimension "A" mm (in)	Part No.	Mark.
4.00 – 4.13 (0.1575 – 0.1626)	32294AA040	1
3.87 – 4.00 (0.1524 – 0.1575)	32294AA050	2

Neutral position adjustment

Reverse accent shaft		
Part No.	Mark	Remarks
32188AA020	A	Neutral position is closer to 1st.
32188AA002	B	Standard
32188AA030	C	Neutral position is closer to reverse.

Reverse check plate adjustment

Reverse check plate			
Part No.	Mark	Angle θ	Remarks
32189AA000	0	28°	Arm stops closer to 5th gear.
32189AA010	1	31°	Arm stops closer to 5th gear.
33189AA020	2	34°	Arm stops in the center.
32189AA030	3	37°	Arm stops closer to reverse gear.
32189AA040	4	40°	Arm stops closer to reverse gear.

FWD

FINAL GEAR ASSEMBLY

Hypoid gear backlash:
0.13 – 0.18 mm (0.0051 – 0.0071 in)

REAR CASE ASSEMBLY

Main shaft rear plate		
Dimension "A" mm (in)	Part No.	Mark
4.50 – 4.63 (0.1772 – 0.1823)	441347001	T81-1
4.37 – 4.50 (0.1720 – 0.1772)	441347002	T81-2

Neutral position adjustment

Reverse accent shaft		
Part No.	Mark	Remarks
32188AA040	1	Neutral position is closer to 1st.
32188AA011	2	Standard
32188AA050	3	Neutral position is closer to reverse.

Reverse check plate adjustment

Reverse check plate			
Part No.	Mark	Angle θ	Remarks
32189AA000	0	28°	Arm stops closer to 5th gear.
32189AA010	1	31°	Arm stops closer to 5th gear.
33189AA012	2	34°	Arm stops in the center.
32189AA030	3	37°	Arm stops closer to reverse gear.
32189AA040	4	40°	Arm stops closer to reverse gear.

4WD	FWD

Snap ring to ball bearing side clearance:
0 – 0.1 mm (0 – 0.004 in)

Snap ring (Inner-56)	
Part No.	Thickness mm (in)
805156020	1.735 – 1.765 (0.0683 – 0.0695)
805156021	1.815 – 1.845 (0.0715 – 0.0726)
805156022	1.895 – 1.925 (0.0746 – 0.0758)

CENTER DIFFERENTIAL & EXTENSION ASSY

Snap ring to ball bearing side clearance:
0 – 0.2 mm (0 – 0.008 in)

Snap ring (Inner-80)	
Part No.	Thickness mm (in)
805180020	1.72 – 1.78 (0.0677 – 0.0701)
805180030	1.87 – 1.93 (0.0736 – 0.0760)
805180040	2.02 – 2.08 (0.0866 – 0.0819)

Backlash adjustment
axial movement: 0.4 – 0.6 mm (0.016 – 0.024 in)

Differential bevel washer	
Part No.	Thickness mm (in)
38960AA001	0.95 – 1.05 (0.0374 – 0.0413)
38960AA011	1.15 – 1.25 (0.0453 – 0.0492)
38960AA021	1.35 – 1.45 (0.0531 – 0.0571)
38960AA031	1.55 – 1.65 (0.0610 – 0.0650)
38960AA041	1.75 – 1.85 (0.0689 – 0.0728)
38960AA051	1.95 – 2.05 (0.0768 – 0.0807)

Snap ring to ball bearing side clearance:
0 – 0.2 mm (0 – 0.008 in)

Snap ring (Outer-50)	
Part No.	Thickness mm (in)
805050030	1.97 – 2.03 (0.0776 – 0.0799)
805050040	2.12 – 2.18 (0.0835 – 0.0858)
805050050	2.27 – 2.33 (0.0894 – 0.0917)

COMPONENT PARTS

Transmission Main Case

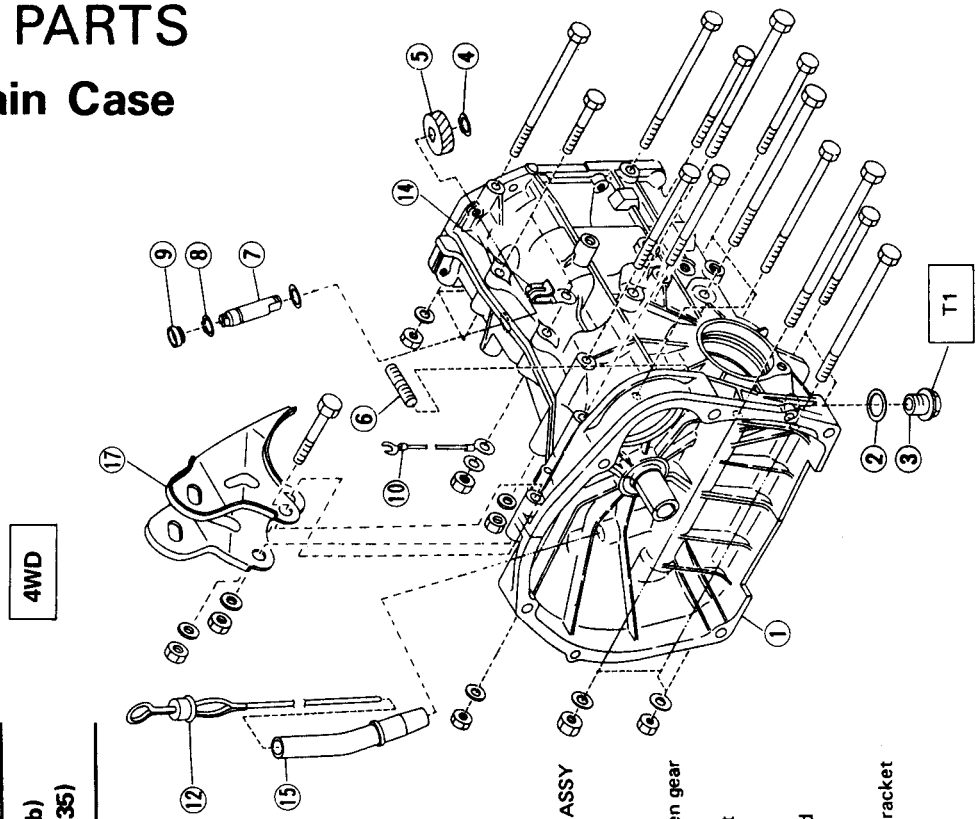

1 Transmission case ASSY
2 Gasket
3 Drain plug
4 Snap ring (OUT)
5 Speedometer driven gear
6 Stud
7 Speedometer shaft
8 Snap ring (OUT)
9 Oil seal
10 Radio ground cord
11 Clip
12 Oil level gauge
13 Pitching stopper bracket
14 Clip
15 Oil gauge guide
16 Oil seal
17 Pitching stopper bracket

Tightening torque: N·m (kg-m, ft-lb)
T1: 41 – 47 (4.2 – 4.8, 30 – 35)

Size	All models	Torque
8 mm bolt	⑤ – ⑮	23 – 26 N·m (2.3 – 2.7 kg-m, 17 – 20 ft-lb)
10 mm bolt	① – ④ ⑯ – ⑰	36 – 42 N·m (3.7 – 4.3 kg-m, 27 – 31 ft-lb)

Tightening sequence

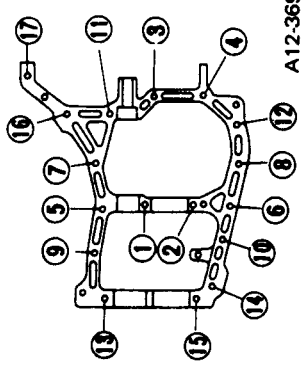

A12-369

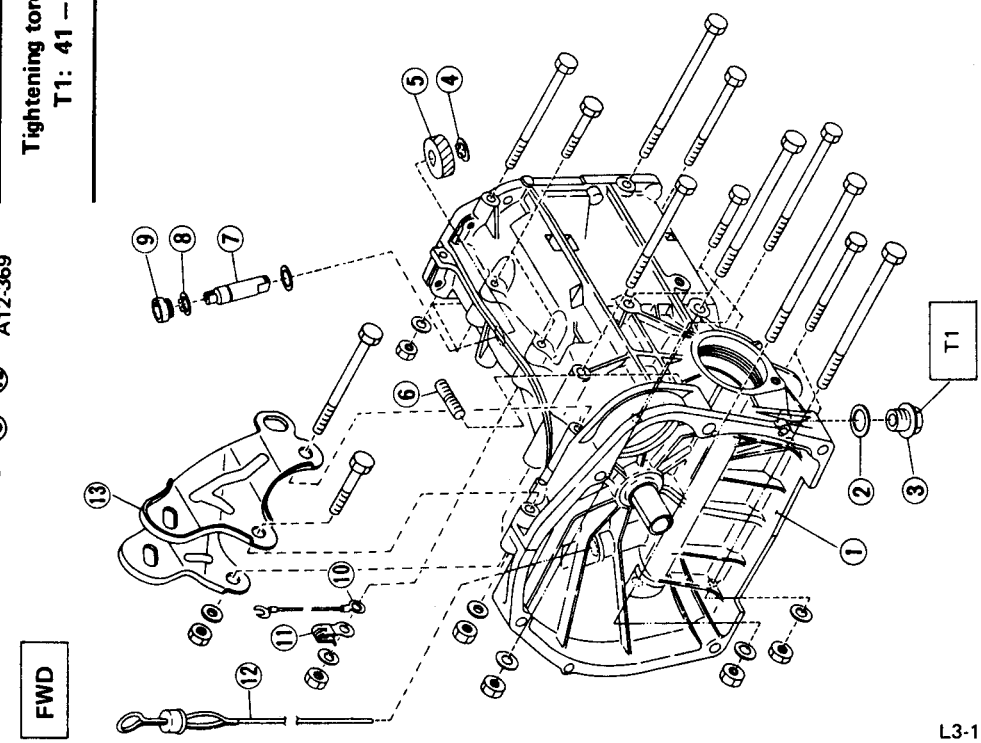

L3-191

Fig. 13

Rear Case

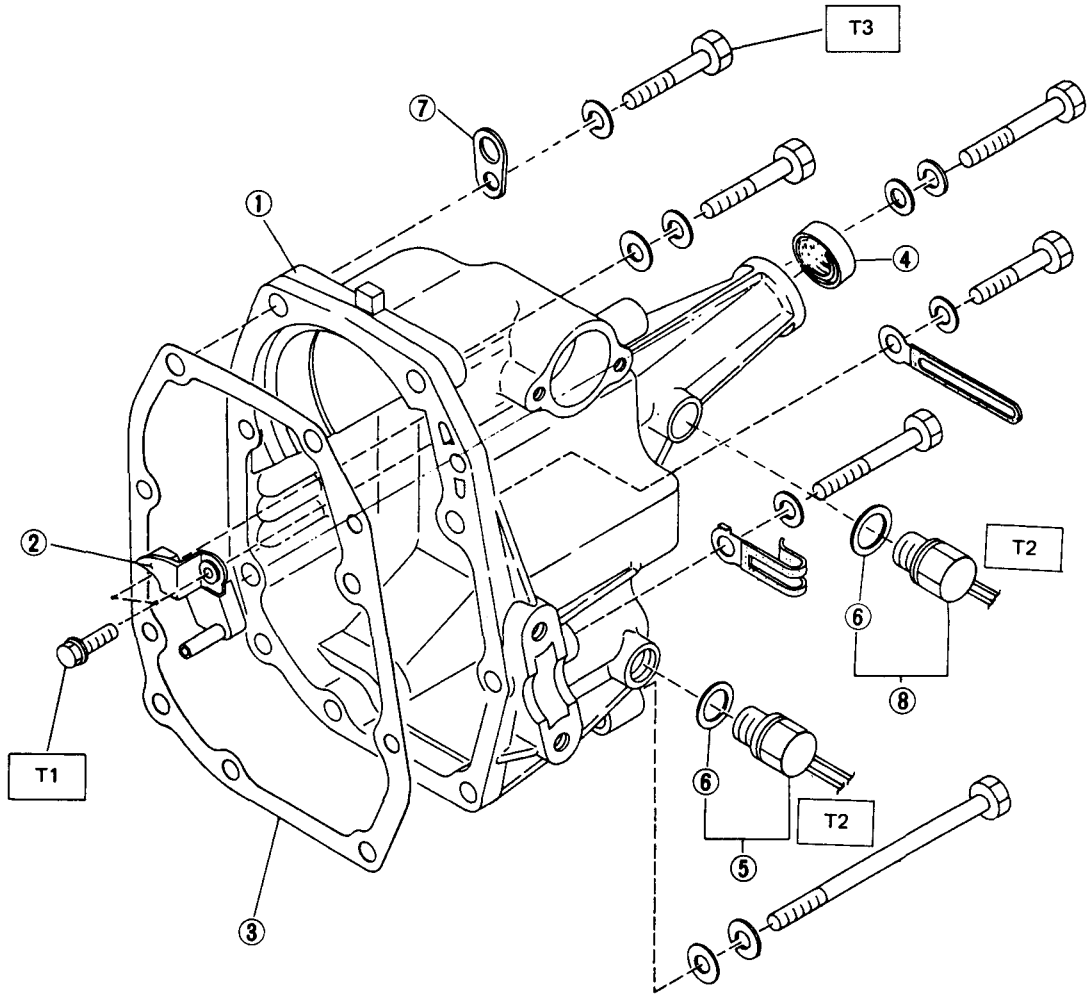

Tightening torque: N·m (kg-m, ft-lb)
T1: 6.4 (0.65, 4.7)
T2: 18 (1.8 , 13)
T3: 23 – 26 (2.3 – 2.7, 17 – 20)

1 Rear case
2 Oil guide
3 Case gasket
4 Oil seal
5 Back-up light switch ASSY
6 Gasket
7 Transmission hanger
8 Neutral switch ASSY

Fig. 14 L3-886

Transfer Case and Transfer Control System

Selective 4WD

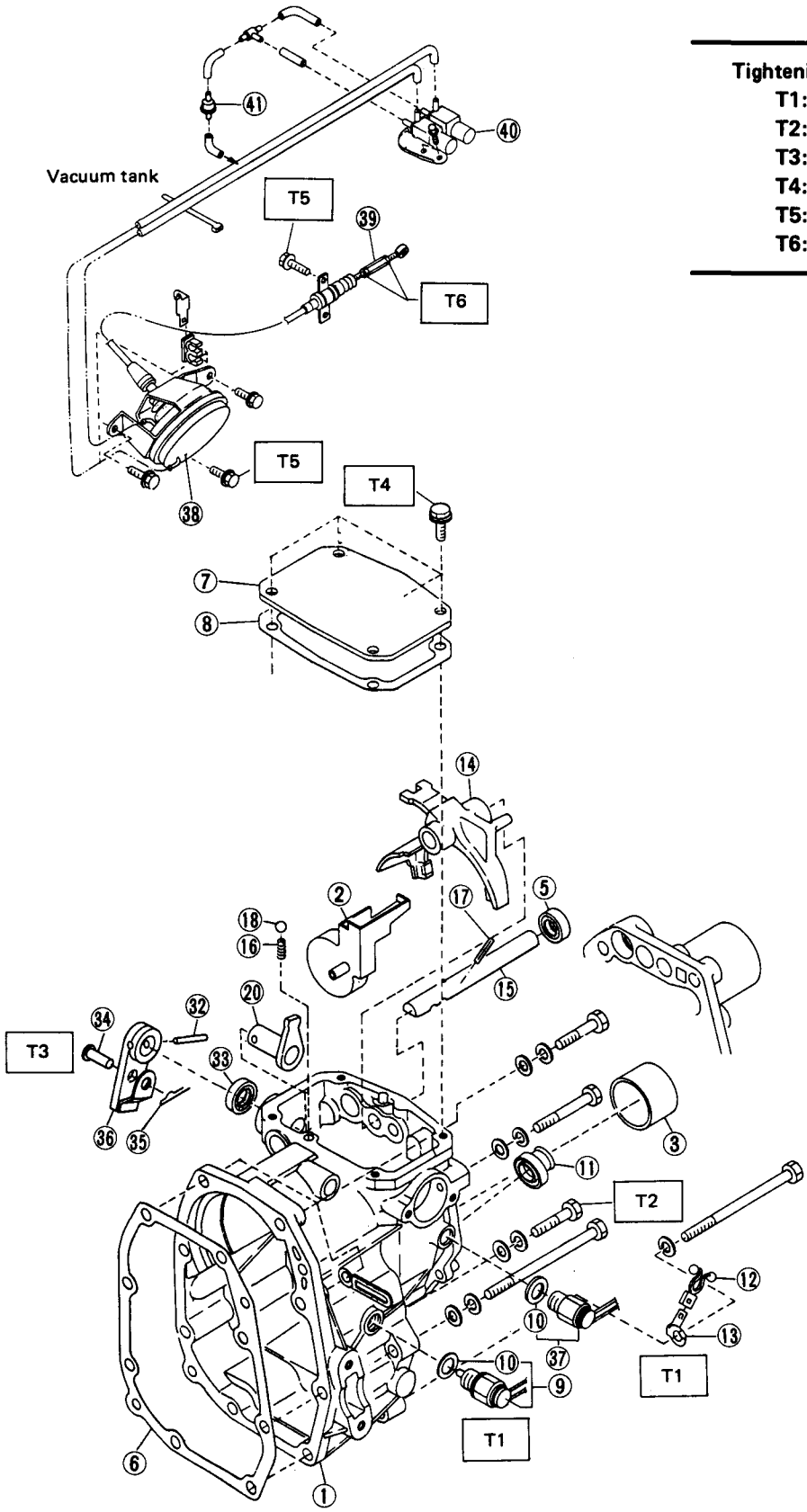

Tightening torque: N·m (kg-m, ft-lb)

T1:	18 (1.8, 13)
T2:	25 (2.5, 18)
T3:	10 (1.0, 7)
T4:	20 (2.0, 14)
T5:	16 (1.6, 12)
T6:	5 (0.5, 3.6)

1 Transfer case CP
2 Oil guide
3 Needle bearing race
5 Oil seal
6 Gasket
7 Transfer cover
8 Cover gasket
9 Back-up light switch ASSY
10 Gasket
11 Oil seal
12 Support
13 Stay
14 Transfer shifter fork CP
15 Transfer shifter rod
16 Spring
17 Spring pin
18 Ball
20 Transfer shifter shaft
26 Ball
28 Clip
30 Spring
32 Spring pin
33 Oil seal
34 Clevis pin
35 Snap pin
36 Transfer shifter lever
37 Neutral switch ASSY
38 Actuator
39 Cable ASSY
40 4WD vacuum switch ASSY
41 Check valve

Fig. 15

L3-895

Full-Time 4WD

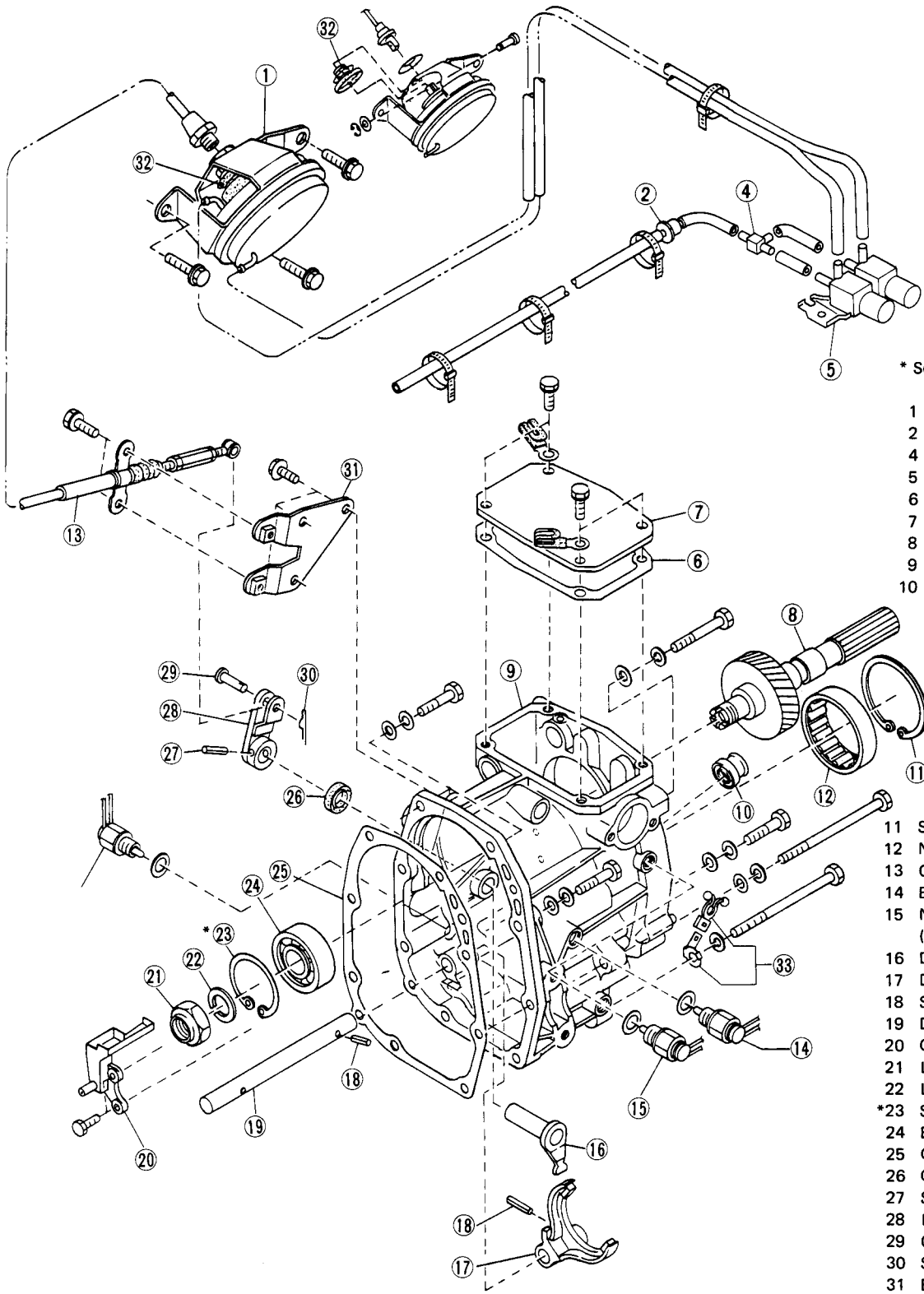

* Selective parts

1 Actuator ASSY
2 Check valve
4 Vacuum hose connector
5 Vacuum switch ASSY
6 Transfer cover
7 Transfer cover gasket
8 Transfer gear set
9 Transfer case CP
10 Oil seal
11 Snap ring (Inner-72)
12 Needle bearing
13 Cable ASSY
14 Back-up light switch ASSY
15 Neutral switch ASSY (MPFI)
16 Differential lock shaft
17 Differential lock fork
18 Spring pin
19 Differential lock rod
20 Oil guide
21 Lock nut
22 Lock washer
*23 Snap ring (Inner-56)
24 Ball bearing
25 Gasket
26 Oil seal
27 Spring pin
28 Lever CP
29 Clevis pin
30 Snap pin
31 Bracket CP
32 Boot B
33 Harness stay CP (1800 cc)

Fig. 16

L3-887

Extension

Selective 4WD

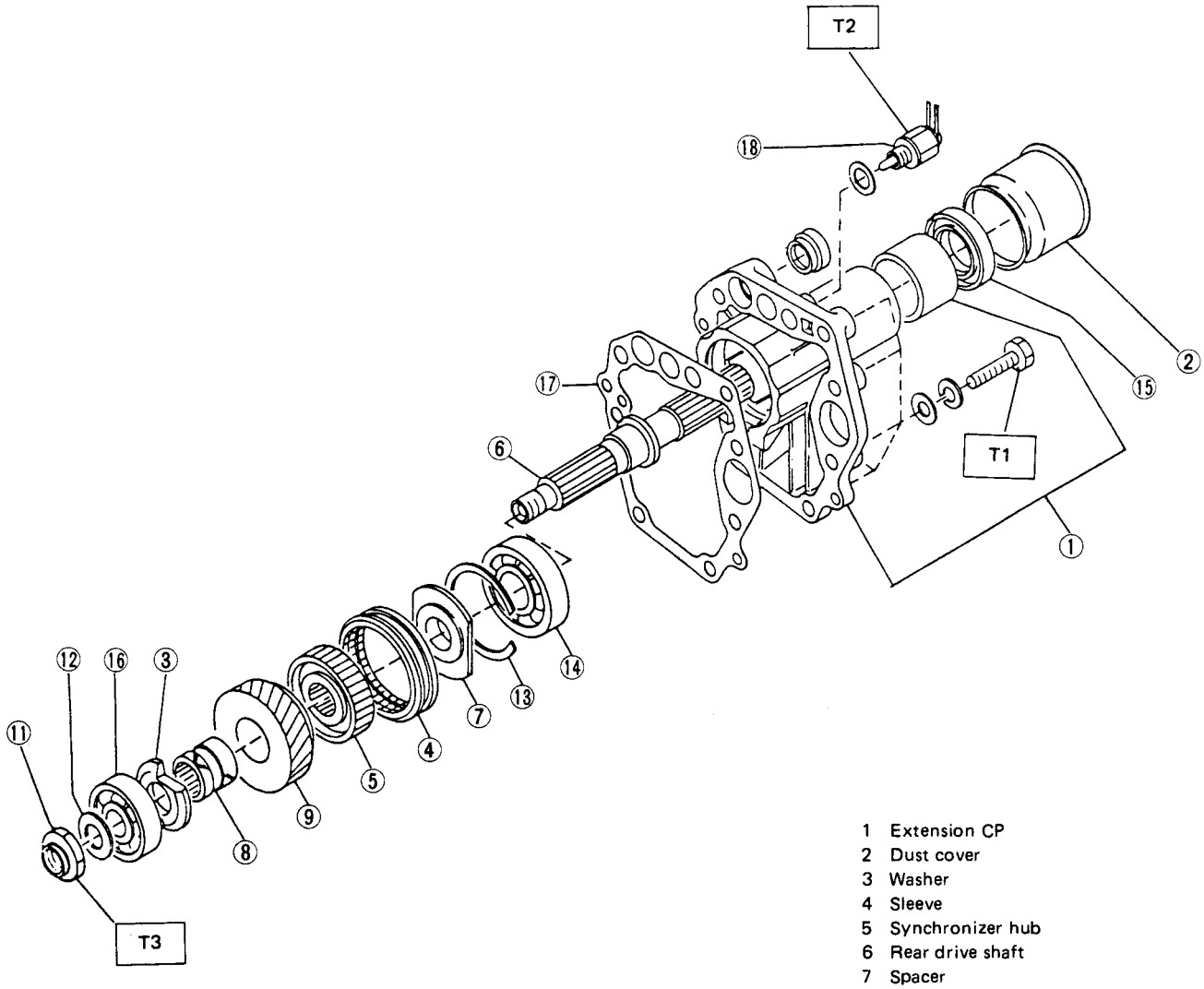

1 Extension CP
2 Dust cover
3 Washer
4 Sleeve
5 Synchronizer hub
6 Rear drive shaft
7 Spacer
8 Bushing
9 Transfer driven gear
11 Lock nut
12 Lock washer
13 Snap ring (IN)
14 Ball bearing
15 Oil seal
16 Ball bearing
17 Gasket
18 4WD switch ASSY

Tightening torque: N·m (kg-m, ft-lb)
T1: 37 (3.8, 27)
T2: 18 (1.8, 13)
T3: 78 (8.0, 58)

Fig. 17

L3-435

Extension and Center Differential

Full-Time 4WD

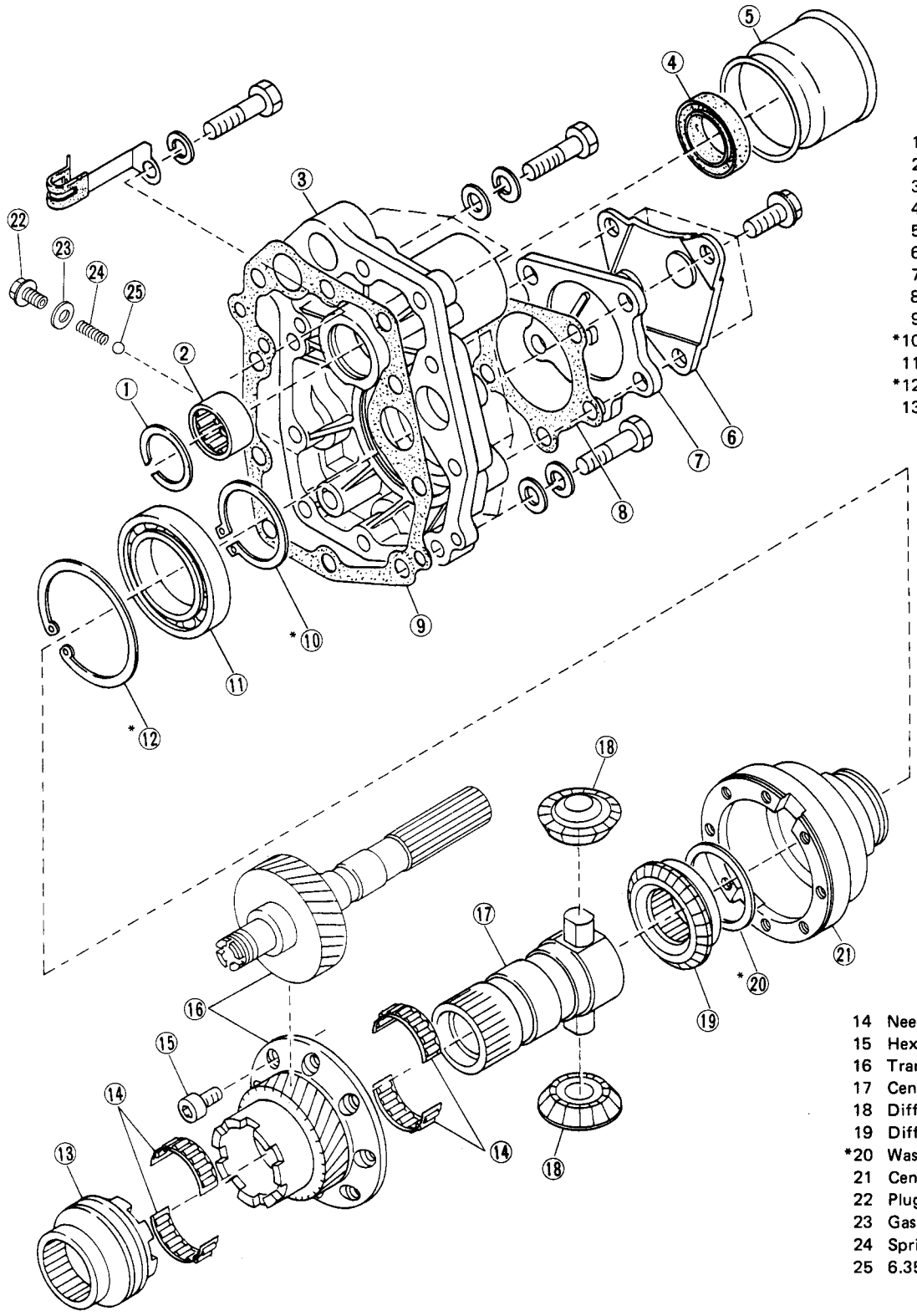

* Selective parts

1 Snap ring (Inner-37)
2 Needle bearing
3 Extension CP
4 Oil seal
5 Dust cover
6 Shifter bracket
7 Extension cover
8 Gasket
9 Transfer gasket
*10 Snap ring (Outer-50)
11 Ball bearing
*12 Snap ring (Inner-80)
13 Differential lock sleeve
14 Needle bearing
15 Hexagon socket head bolt
16 Transfer gear set
17 Center differential pinion shaft
18 Differential bevel pinion
19 Differential bevel gear
*20 Washer
21 Center differential case
22 Plug
23 Gasket
24 Spring
25 6.350 ball

Fig. 18

L3-888

Shifter Fork and Shifter Rod

*Selective parts

1 1st-2nd fork rod
*2 1st-2nd shifter fork CP
3 3rd-4th fork rod
*4 3rd-4th shifter fork CP
*5 5th shifter fork CP
6 Reverse fork rod
*7 Reverse shifter lever CP
8 Reverse fork rod arm
9 Shifter fork screw
10 Interlock plunger
11 Interlock plunger
12 Spring
13 Checking ball spring
14 Checking ball plug
15 Selector arm
16 Shifter arm CP (4WD)
17 Shifter arm CP (FWD)
18 Reverse accent spring
19 Reverse checking sleeve
20 Reverse checking cam
21 Reverse checking spring
22 Reverse return spring
*23 Reverse accent shaft
*24 Reverse check plate
25 Snap ring (IN)
26 O-ring
27 Adjusting select shim
28 Straight pin
29 Ball
30 Ball
31 Bolt & washer ASSY
32 Snap ring (OUT)
33 Gasket
34 Gasket
35 Filler
36 1st-2nd fork rod
*37 1st-2nd shifter fork CP
38 3rd-4th fork rod
*39 3rd-4th shifter fork CP
*40 5th shifter fork CP
41 Reverse fork rod
*42 Reverse shifter lever CP
43 Reverse fork rod arm
44 Interlock plunger
45 Snap ring (OUT)

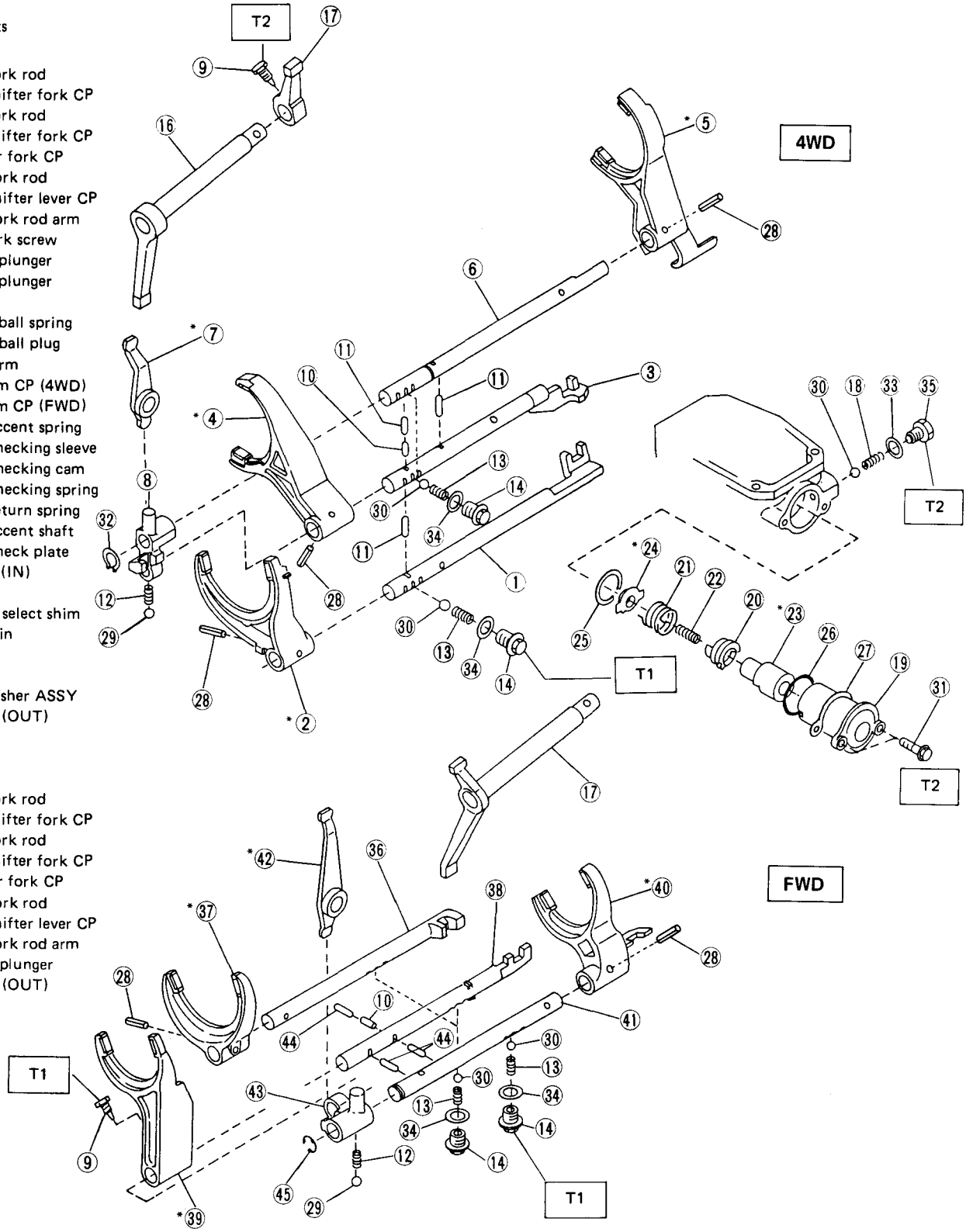

Tightening torque: N·m (kg-m, ft-lb)
T1: 20 (2, 14)
T2: 10 (1, 7)

Fig. 19

L3-334

Transmission Main Shaft

FWD

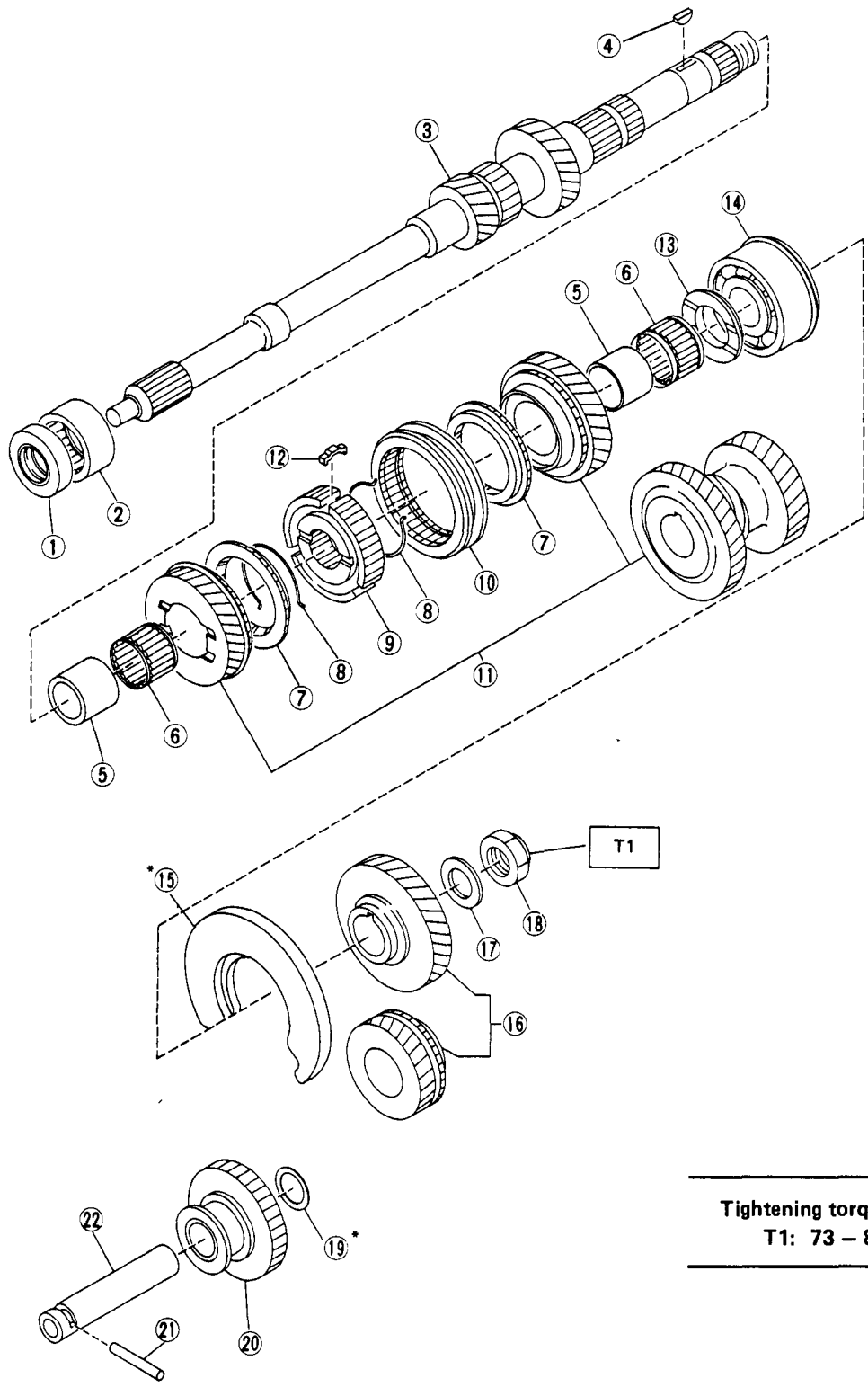

*Selective parts

1 Oil seal
2 Needle bearing
3 Transmission main shaft
4 Woodruff key
5 5th needle bearing race
6 Needle bearing
7 Baulk ring
8 Synchronizer spring
9 Synchronizer hub
10 Coupling sleeve
11 3rd-4th gear set
12 Shifting insert
13 4th gear thrust washer
14 Ball bearing
*15 Main shaft rear plate
16 5th gear set
17 Lock washer
18 Lock nut
*19 Washer
20 Reverse idler gear CP
21 Straight pin
22 Reverse idler gear shaft

Tightening torque: N·m (kg-m, ft-lb)
T1: 73 – 84 (7.4 – 8.6, 54 – 62)

Fig. 20

L3-251

All 4WD

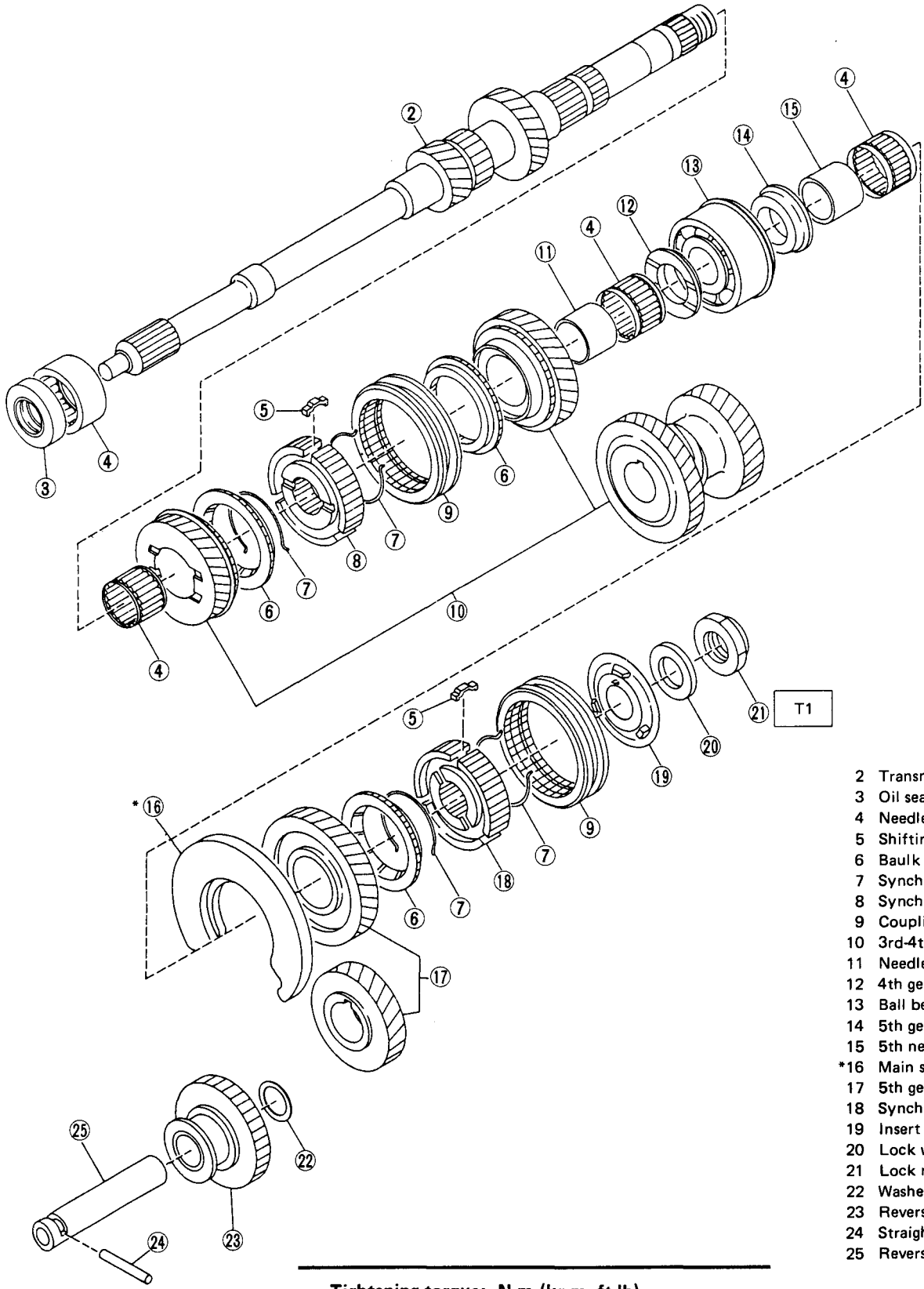

* Selective parts

2 Transmission main shaft
3 Oil seal
4 Needle bearing
5 Shifting insert
6 Baulk ring
7 Synchronizer spring
8 Synchronizer hub
9 Coupling sleeve
10 3rd-4th gear set
11 Needle bearing race
12 4th gear thrust washer
13 Ball bearing
14 5th gear thrust washer
15 5th needle bearing race
*16 Main shaft rear plate
17 5th gear set
18 Synchronizer hub
19 Insert stopper plate
20 Lock washer
21 Lock nut
22 Washer
23 Reverse idler gear CP
24 Straight pin
25 Reverse idler gear shaft

Tightening torque: N·m (kg-m, ft-lb)
T1: 118 (12.0, 87)

Fig. 21

L3-500

Drive Pinion Shaft

FWD

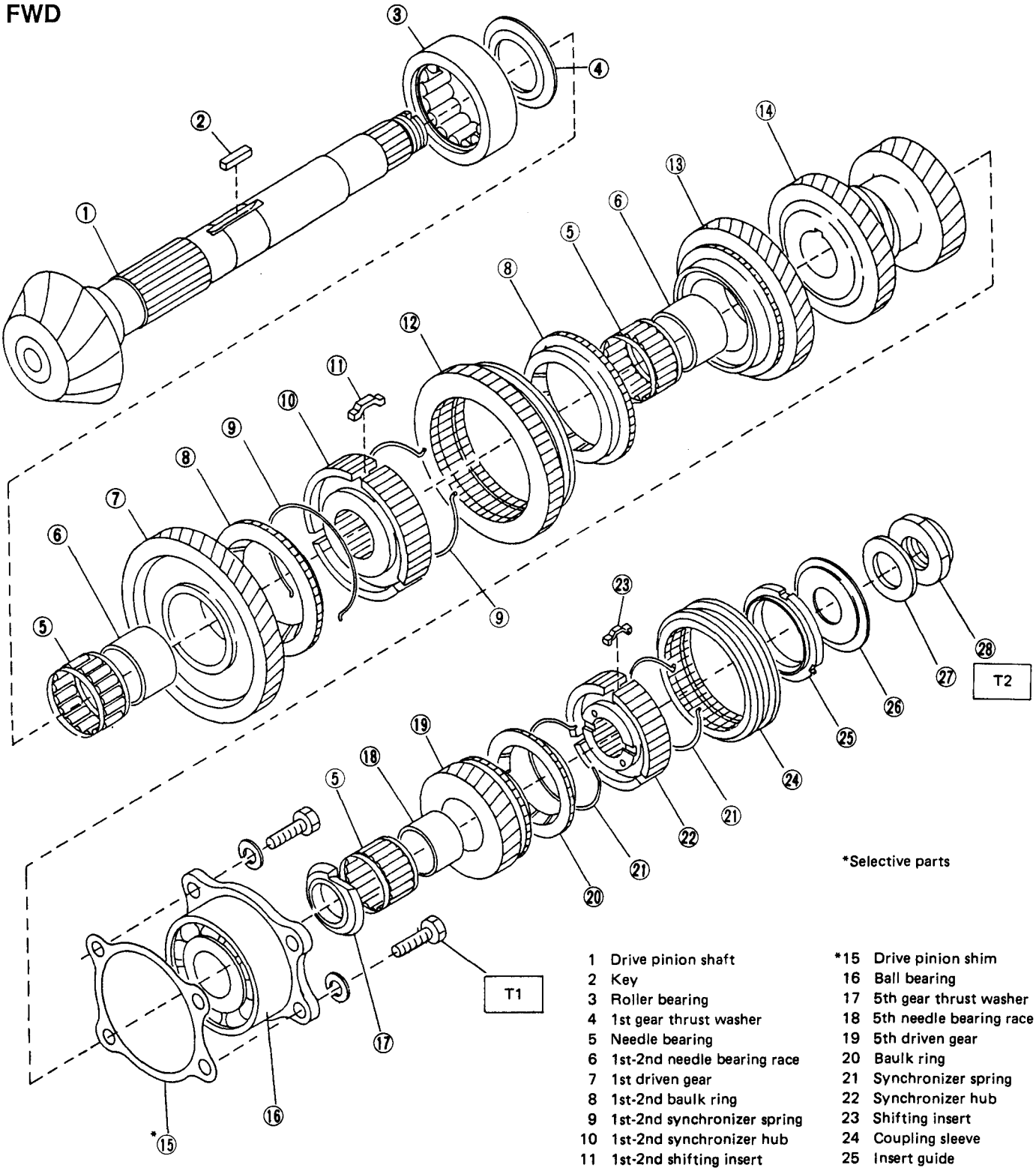

*Selective parts

1	Drive pinion shaft	*15	Drive pinion shim
2	Key	16	Ball bearing
3	Roller bearing	17	5th gear thrust washer
4	1st gear thrust washer	18	5th needle bearing race
5	Needle bearing	19	5th driven gear
6	1st-2nd needle bearing race	20	Baulk ring
7	1st driven gear	21	Synchronizer spring
8	1st-2nd baulk ring	22	Synchronizer hub
9	1st-2nd synchronizer spring	23	Shifting insert
10	1st-2nd synchronizer hub	24	Coupling sleeve
11	1st-2nd shifting insert	25	Insert guide
12	Reverse driven gear	26	Insert stopper plate
13	2nd driven gear	27	Lock washer
14	3rd-4th driven gear	28	Lock nut

Tightening torque: N·m (kg-m, ft-lb)
T1: 26 – 32 (2.7 – 3.3, 20 – 24)
T2: 78 (8.0, 58)

Fig. 22

L3-177

Selective 4WD

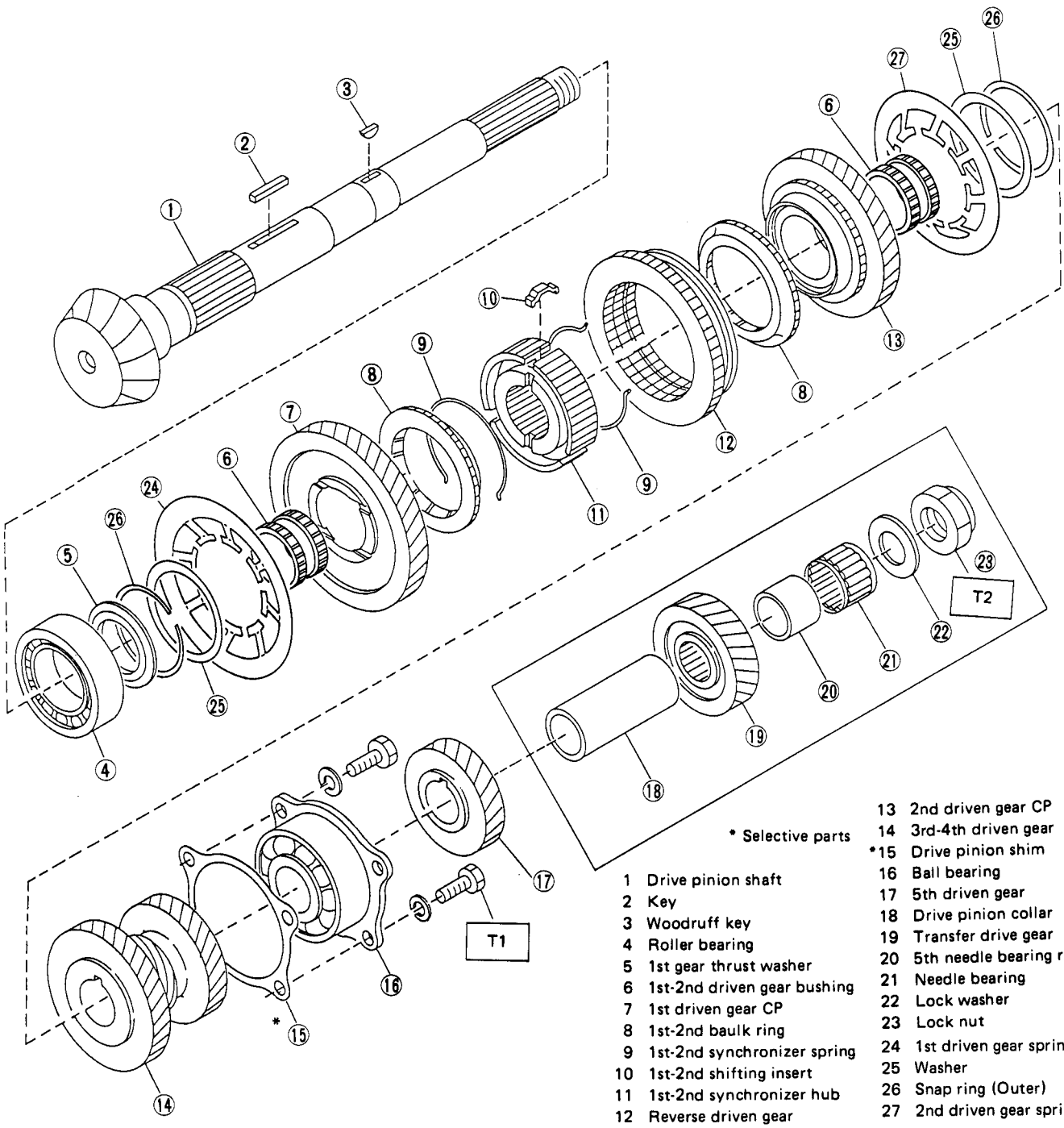

* Selective parts

1 Drive pinion shaft
2 Key
3 Woodruff key
4 Roller bearing
5 1st gear thrust washer
6 1st-2nd driven gear bushing
7 1st driven gear CP
8 1st-2nd baulk ring
9 1st-2nd synchronizer spring
10 1st-2nd shifting insert
11 1st-2nd synchronizer hub
12 Reverse driven gear
13 2nd driven gear CP
14 3rd-4th driven gear
*15 Drive pinion shim
16 Ball bearing
17 5th driven gear
18 Drive pinion collar
19 Transfer drive gear
20 5th needle bearing race
21 Needle bearing
22 Lock washer
23 Lock nut
24 1st driven gear spring
25 Washer
26 Snap ring (Outer)
27 2nd driven gear spring

Tightening torque: N·m (kg-m, ft-lb)
T1: 26 – 32 (2.7 – 3.3, 20 – 24)
T2: 112 – 124 (11.4 – 12.6, 82 – 91)

Fig. 23

L3-889

Full-Time 4WD

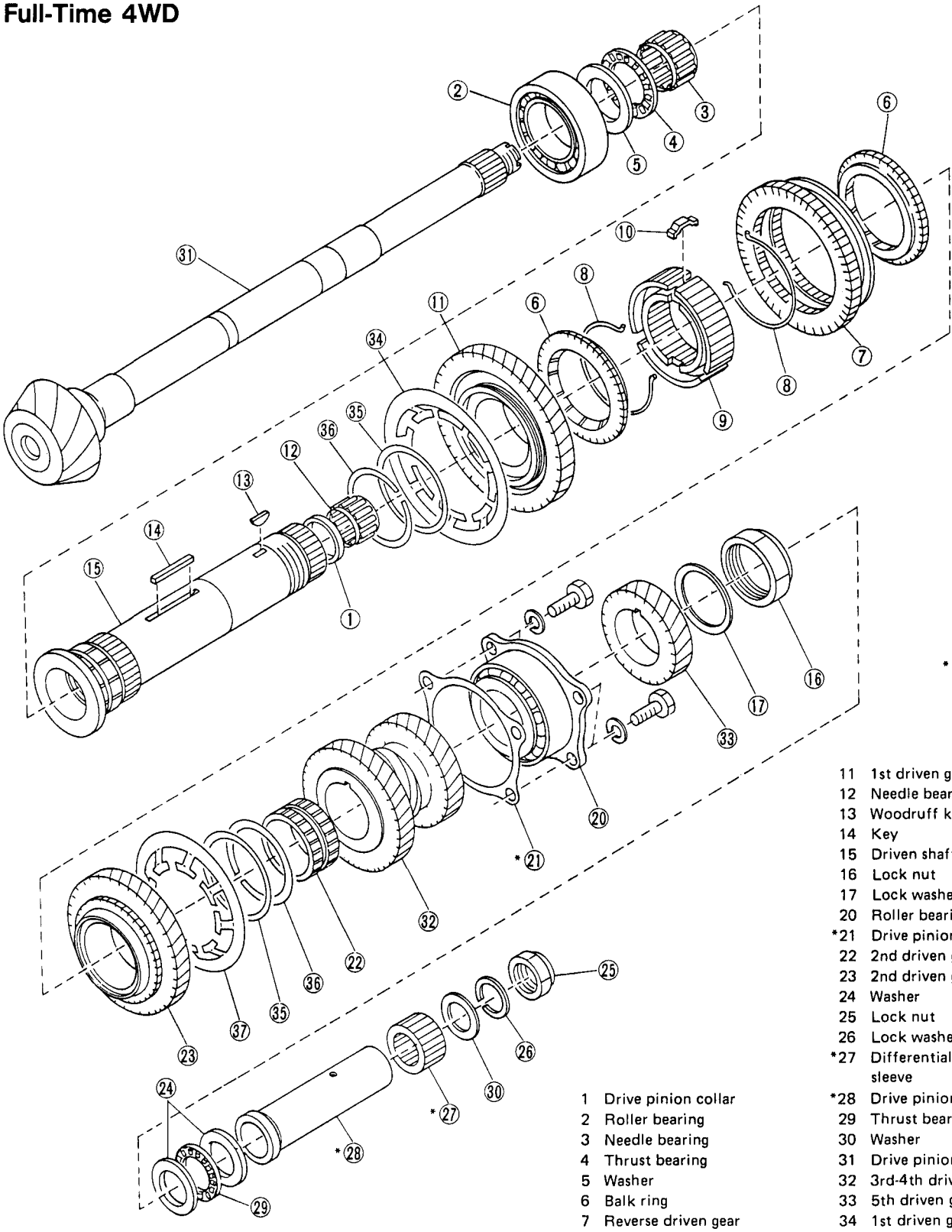

* Selective parts

1 Drive pinion collar
2 Roller bearing
3 Needle bearing
4 Thrust bearing
5 Washer
6 Balk ring
7 Reverse driven gear
8 Spring
9 1st-2nd synchronizer hub
10 Insert
11 1st driven gear
12 Needle bearing
13 Woodruff key
14 Key
15 Driven shaft
16 Lock nut
17 Lock washer
20 Roller bearing
*21 Drive pinion shim
22 2nd driven gear bush
23 2nd driven gear
24 Washer
25 Lock nut
26 Lock washer
*27 Differential bevel gear sleeve
*28 Drive pinion spacer
29 Thrust bearing
30 Washer
31 Drive pinion shaft
32 3rd-4th driven gear
33 5th driven gear
34 1st driven gear spring
35 Washer
36 Snap ring (Outer)
37 2nd driven gear spring

Fig. 24 L3-868

Differential

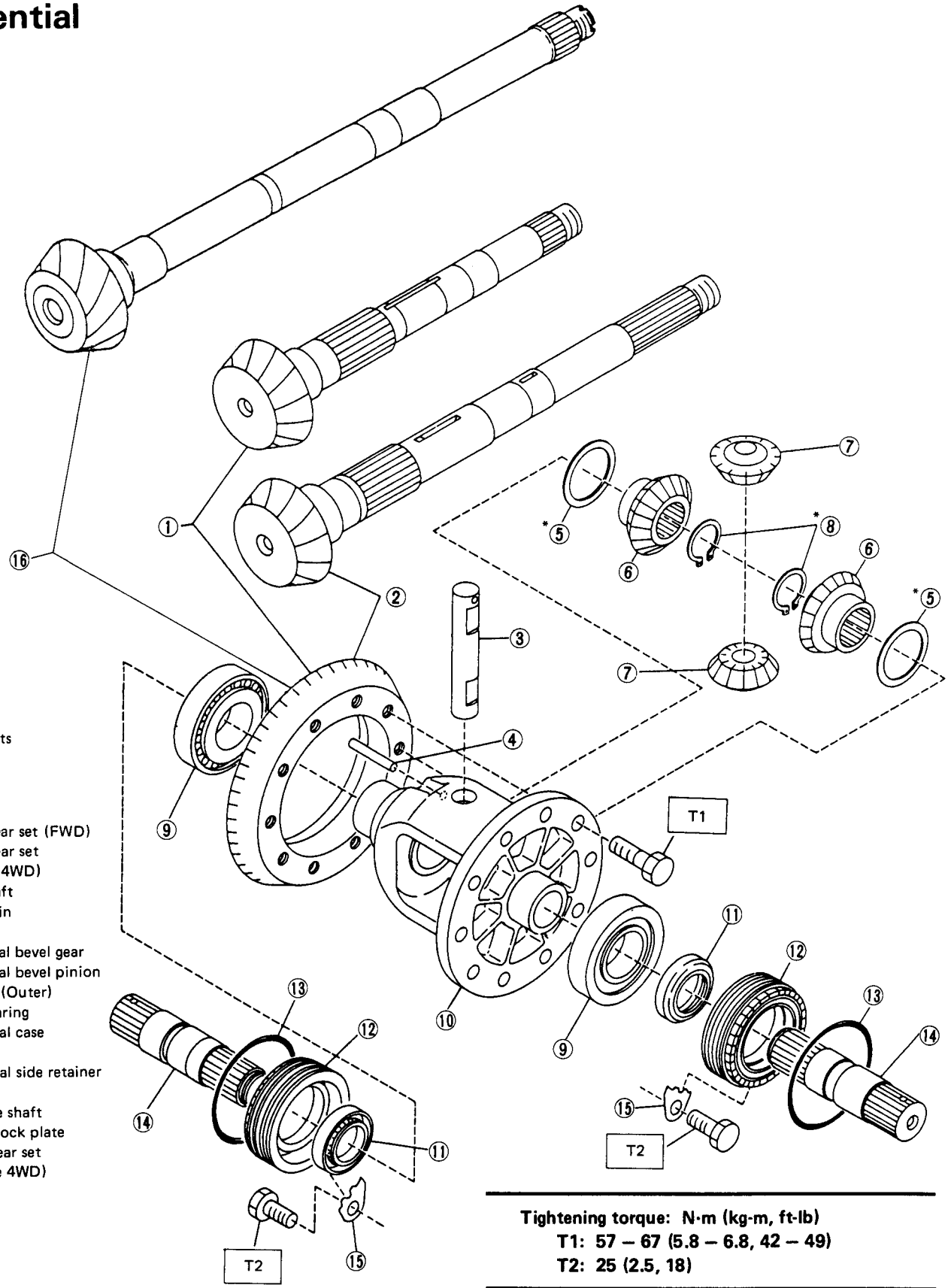

* Selective parts

1 Hypoid gear set (FWD)
2 Hypoid gear set (Selective 4WD)
3 Pinion shaft
4 Straight pin
*5 Washer
6 Differential bevel gear
7 Differential bevel pinion
*8 Snap ring (Outer)
9 Roller bearing
10 Differential case
11 Oil seal
12 Differential side retainer
13 O-ring
14 Axle drive shaft
15 Retainer lock plate
16 Hypoid gear set (Full time 4WD)

Tightening torque: N·m (kg-m, ft-lb)
T1: 57 – 67 (5.8 – 6.8, 42 – 49)
T2: 25 (2.5, 18)

Fig. 25

L3-890

SERVICE PROCEDURE

The vehicle models listed after the description of each service procedure indicate the vehicle models to which that procedure applies. If an item does not list any vehicle model, it applies to all models.

A Selective 4WD

[1] Overall Transmission

DISASSEMBLY

The following job should be followed before disassembly;
- Clean oil, grease, dirt and dust from transmission.
- Remove drain plug to drain oil. After draining, retighten it as before.
- Replace gasket with a new one.

Tightening torque:
41 – 47 N·m (4.2 – 4.8 kg-m, 30 – 35 ft-lb)

1) Attach transmission to TRANSMISSION STAND SET (399295120).
2) Remove release lever and clutch release bearing.
   (1) Remove two clutch sleeve clips from transmission front, and then clutch release bearing.
   (2) Remove release dust cover. Next, remove release lever retainer spring from release lever by pushing release lever from outside main case, and take out lever.

Be careful not to deform clutch sleeve clips and release lever retainer spring.

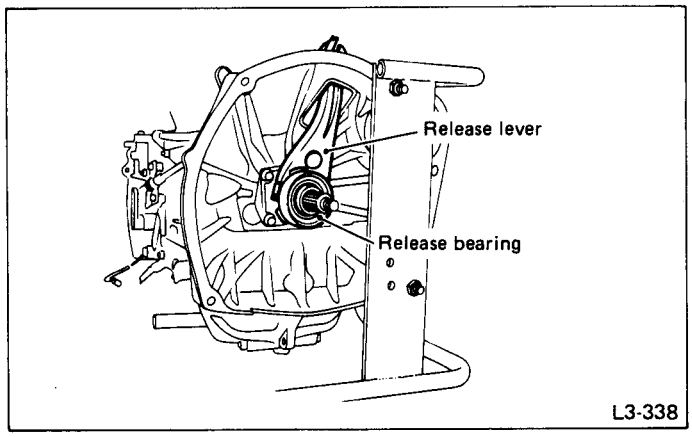

Fig. 26

3) Removing actuator & cable ASSY
Using REMOVER II (398791600), drive out spring pin (5.2 x 28) connecting transfer shifter shaft and transfer shifter lever on the right side of transfer case. Remove transfer shifter lever from transfer shifter shaft. Remove snap pin and extract 8-mm clevis pin. Then, remove cable from transfer shifter lever. Remove five 8-mm bolts & washers (three on actuator and two on cable) and remove actuator & cable ASSY.

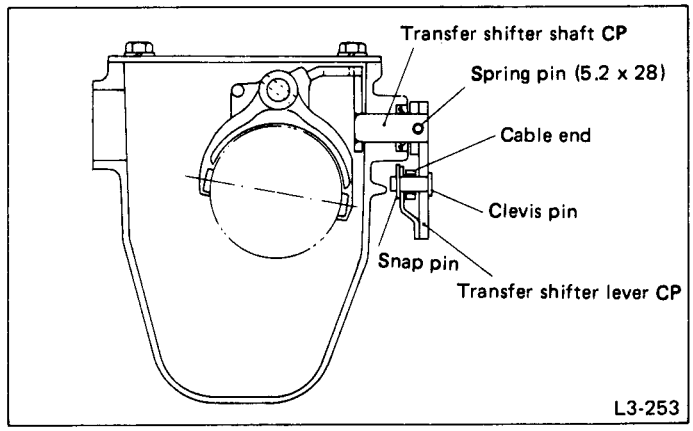

Fig. 27

4) Removing transfer cover
Remove transfer cover by loosening four bolts.

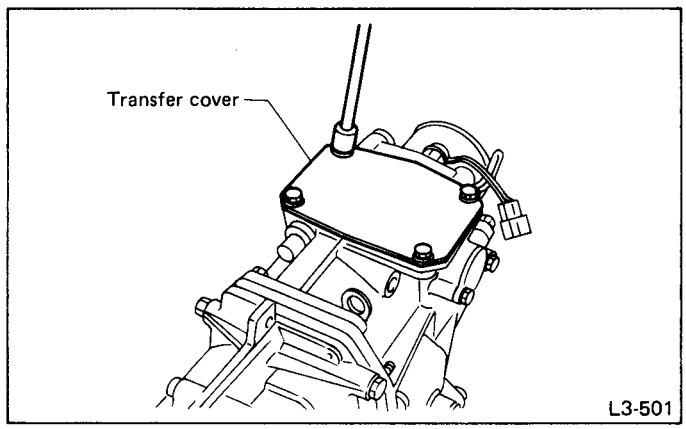

Fig. 28

5) Removing straight pin in transfer shifter fork CP
Using REMOVER II (398791600), drive out straight pin (5 x 25).
6) Removing transfer shifter rod and transfer shifter fork
Extract transfer shifter rod by turning it 180°. Remove transfer shifter fork. Also remove ball (6.35) and checking ball spring from transfer case.

a. When taking out fork, move reverse checking sleeve 2 to 3 mm (0.08 to 0.12 in) toward outside by loosening it.
b. Be careful not to drop ball when removing transfer shifter rod.

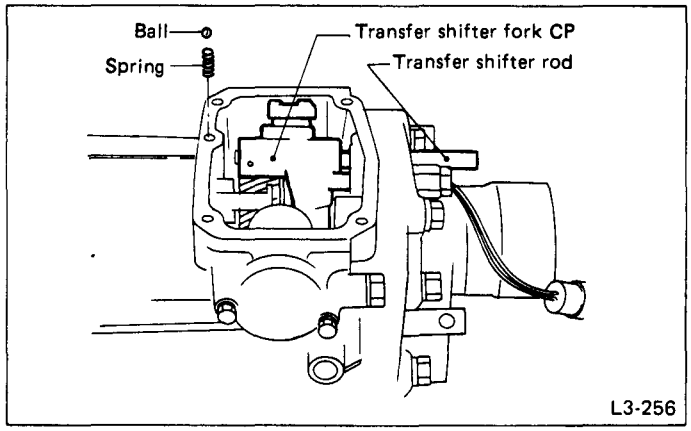

Fig. 29

7) Removing bolts from extension
Remove seven bolts from extension.

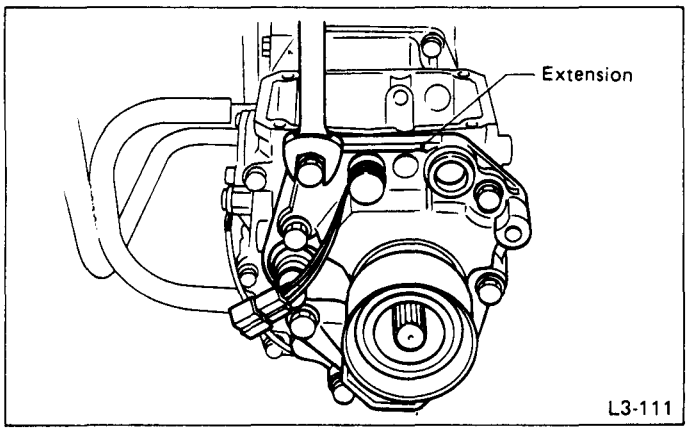

Fig. 30

8) Removing extension and transfer gear ASSY
Remove extension & transfer gear ASSY.
9) Removing transfer shifter shaft
Extract transfer shifter shaft from the right side of transfer case.

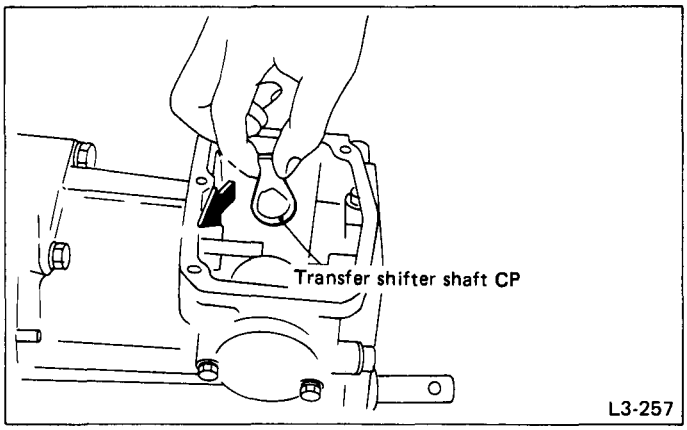

Fig. 31

10) Remove transfer case plug with gasket and then remove reverse accent spring and ball (7.1438).

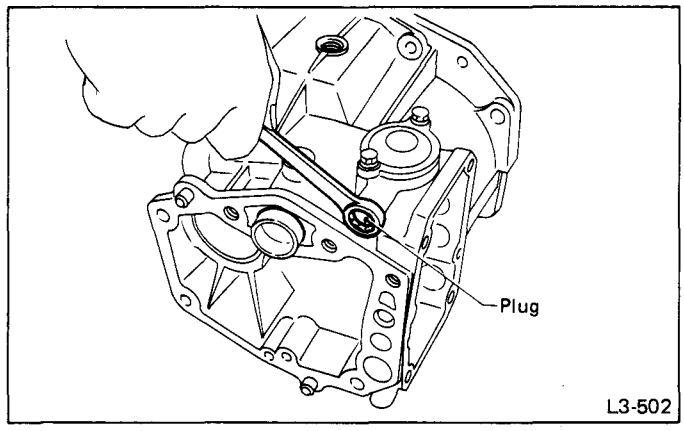

Fig. 32

11) Remove the two bolts from reverse check sleeve ASSY and move the sleeve ASSY until it rotates freely.

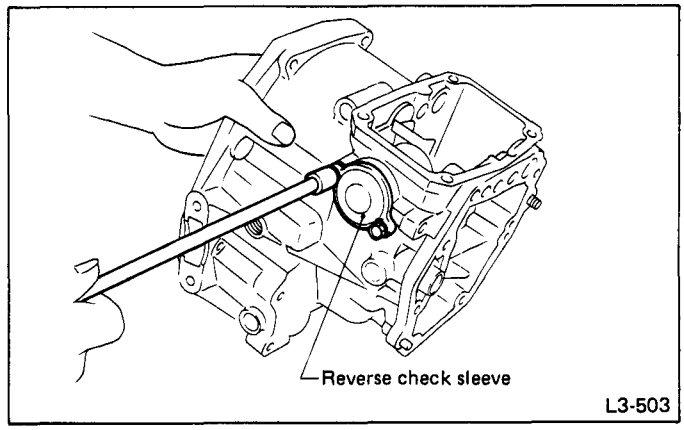

Fig. 33

12) Removing shifter fork screw from selector arm
Remove shifter fork screw securing selector arm to shifter arm CP.

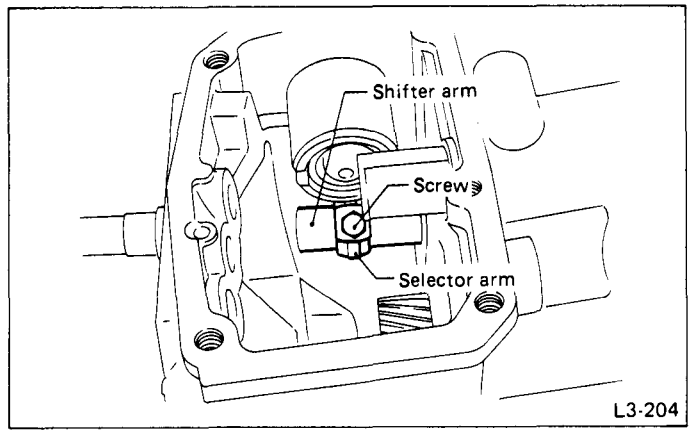

Fig. 34

13) Removing transfer case and shifter ASSY
Loosen eight bolts, and remove transfer case and shifter ASSY from transmission case by tapping with a plastic hammer.
14) Removing bearing mounting bolts
Remove four bolts mounting ball bearing behind drive pinion shaft ASSY.

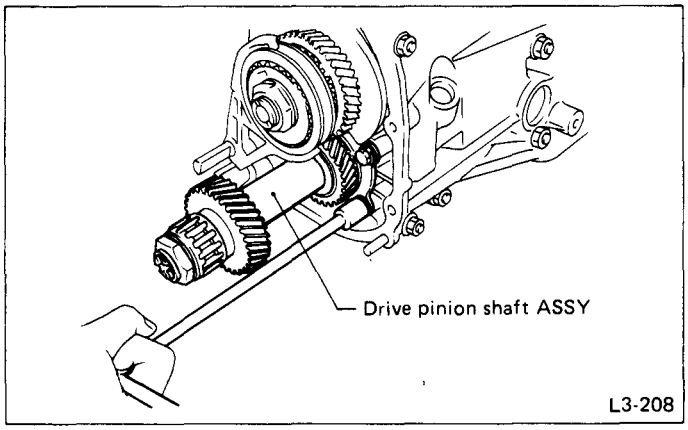

Fig. 35

15) Remove main shaft rear plate.
16) Putting vinyl tape around axle drive shafts
Put vinyl tape around splines of right and left axle drive shafts to prevent damage to oil seals.

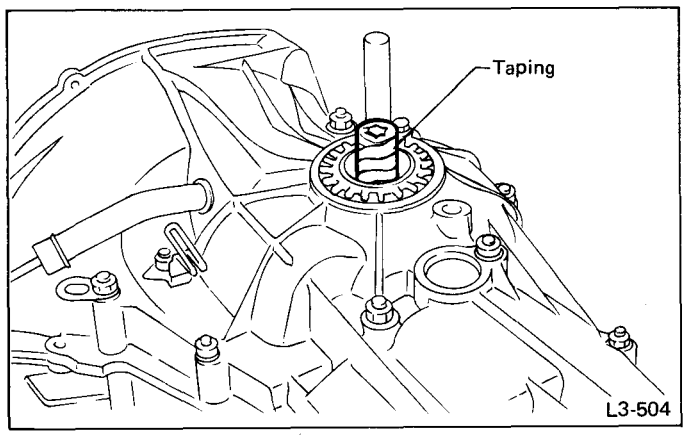

Fig. 36

17) Separating transmission case
Separate transmission case into right and left cases by loosening seventeen coupling bolts.

Work with nuts facing upward.

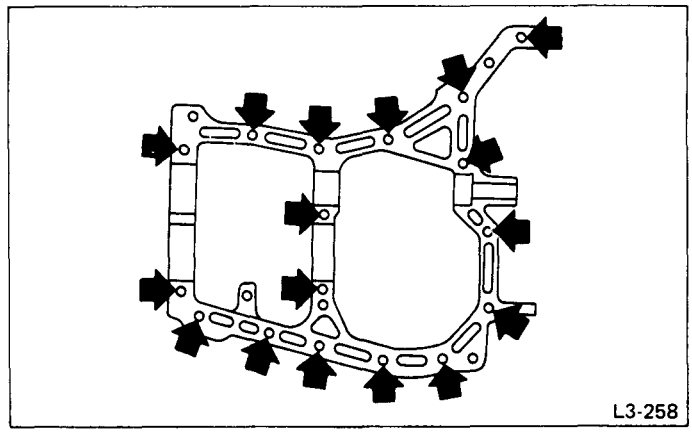

Fig. 37

18) Removing drive pinion shaft
Remove drive pinion shaft ASSY from LH transmission.

Use a hammer handle, etc. to remove if too tight.

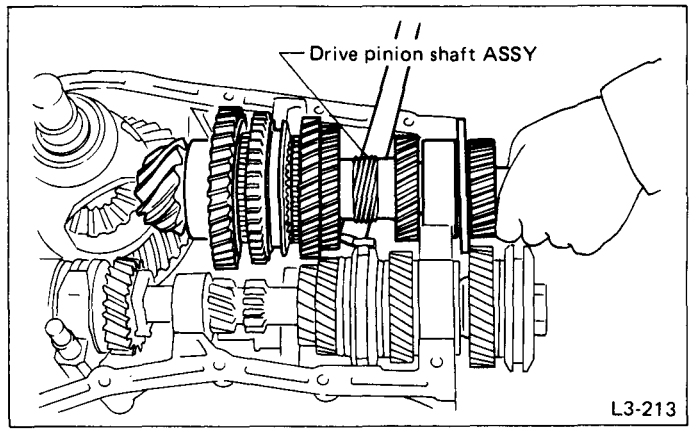

Fig. 38

19) Removing transmission main shaft ASSY
Remove main shaft ASSY from LH transmission case.
20) Removing differential ASSY
Remove differential assembly from transmission case.

a. Be careful not to confuse right and left roller bearing outer races.
b. Be careful not to damage retainer oil seal.

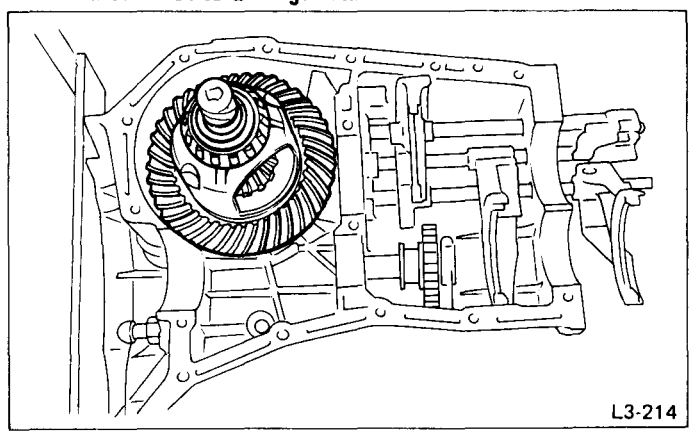

Fig. 39

21) Removing 5th shifter fork
Remove spring pin from 5th shifter fork by driving with STRAIGHT PIN REMOVER 2 (398791700).

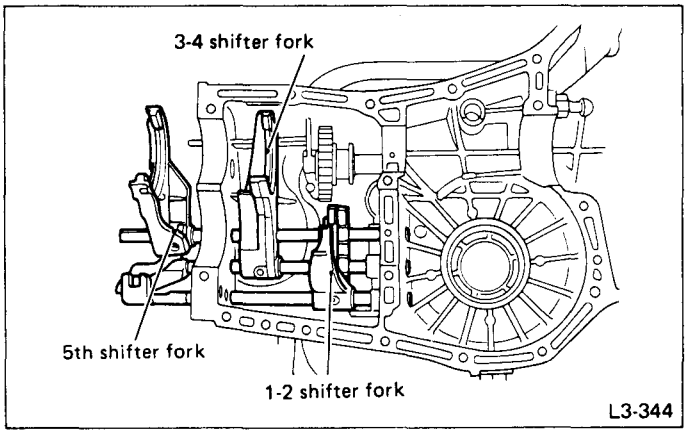

Fig. 40

22) Removing checking ball plugs
Remove three checking ball plugs from main case.

There are spring and ball inside. Replace gasket with a new one.

23) Removing fork and rod
Using STRAIGHT PIN REMOVER 2 (398791700), drive out spring pins from 1-2 shifter fork CP and 3-4 shifter fork CP, and remove 3-4 fork rod and 3-4 shifter fork CP. Then, pull out 1-2 fork rod and remove 1-2 shifter fork CP.

When removing rod, keep other rods in neutral. Also, when pulling out spring pin, remove it toward inside of case so that it may not hit against case.

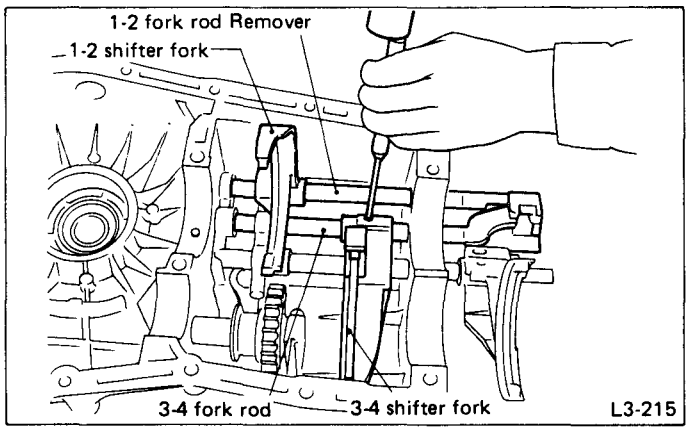

Fig. 41

24) Removing reverse idler gear
Pull out straight pin and reverse idler gear shaft. Then, remove reverse idler gear CP and washer (15.5 x 21 x T).

When pulling out straight pin, wash off oil and blow air on it for easy removal.

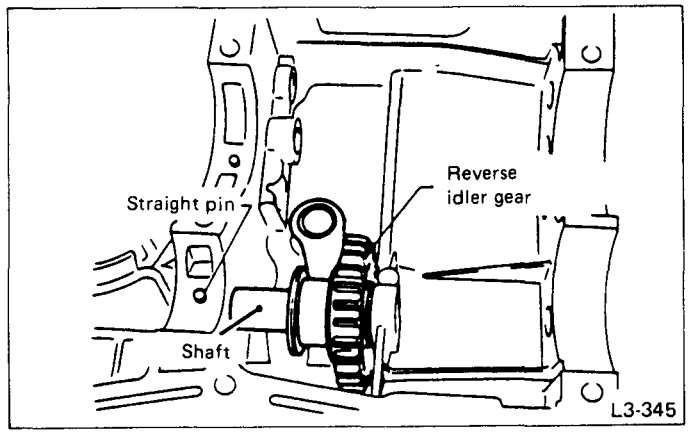

Fig. 42

25) Removing arm and rod
Remove outer snap ring, and pull out reverse shifter rod arm from reverse fork rod. Then take out ball, spring and interlock plunger from rod.
And then remove rod.

When pulling out reverse shifter rod arm, be careful not to let ball pop out of arm.

26) Remove reverse shifter lever.
27) Removing differential side retainer ASSY
Using WRENCH ASSY (499787000), remove differential side retainer ASSY from transmission case.

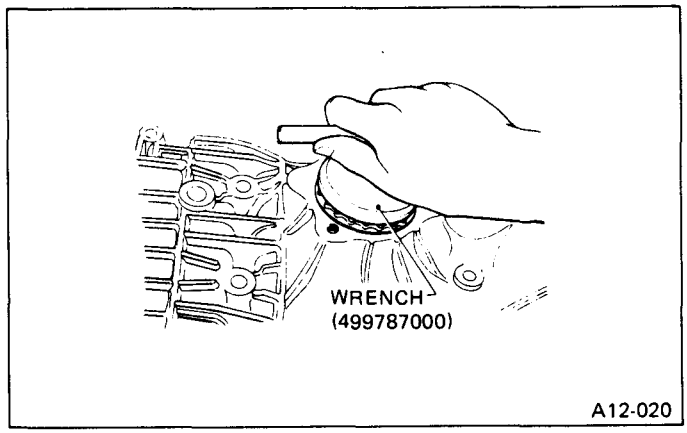

Fig. 43

28) Removing speedometer driven gear
Remove outer snap ring and pull out speedometer driven gear. Next, remove speedometer shaft CP and washer (12.5 x 15.5 x 1) from main case.

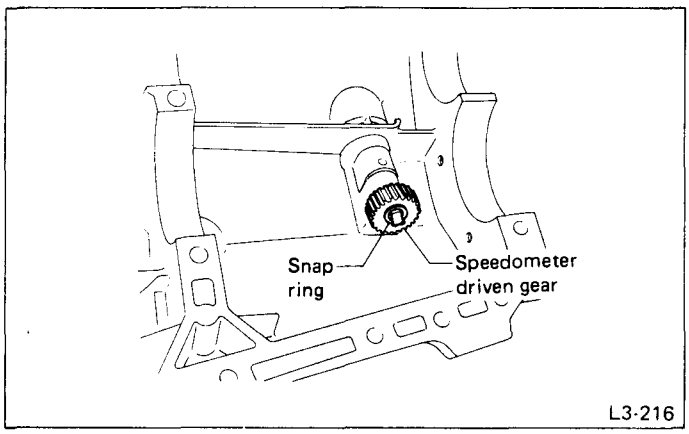

Fig. 44

INSPECTION

Disassembled parts should be washed clean first and then inspected carefully.

1) Bearings
Replace bearings in the following cases:
- Bearings whose balls, outer races and inner races are broken or rusty.
- Worn bearings.
- Bearings that fail to turn smoothly or make abnormal noise when turned after gear oil lubrication.
  The ball bearing on the rear side of the drive pinion should be checked for smooth rotation before the drive pinion ASSY is disassembled. In this case, because a preload is working on the bearing, its rotation feels slightly dragging unlike the other bearings.
- Bearings having other defects.

2) Bushing (each gear)
Replace the bushing in the following cases:
(1) When the sliding surface is damaged or abnormally worn.
(2) When the inner wall is abnormally worn.

3) Gears
(1) Replace gears with new ones if their tooth surfaces are broken, damaged, or excessively worn.
(2) Correct or replace if the cone that contacts the balk ring is rough or damaged.
(3) Correct or replace if the inner surface or end face is damaged.

4) Balk ring
Replace the ring in the following cases:
- When the inner surface and end face are damaged.
- When the ring inner surface is abnormally or partially worn down.
- If the gap between the end faces of the ring and the gear splined part is excessively small when the ring is pressed against the cone.
- When the contact surface of the synchronizer insert is scored or abnormally worn down.

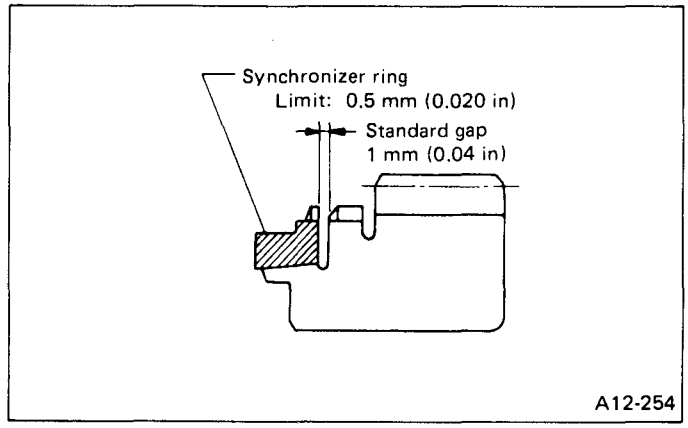

Fig. 45

5) Insert (shifting)
Replace the insert if deformed, excessively worn, or defective in any way.

6) Oil seal
Replace the oil seal if the lip is deformed, hardened, damaged, worn, or defective in any way.

7) O-ring
Replace the O-ring if the sealing face is deformed, hardened, damaged, worn, or defective in any way.

8) Gearshift mechanism
Repair or replace the gearshift mechanism if excessively worn, bent, or defective in any way.

9) Differential gear
Repair or replace the differential gear in the following cases.
(1) The hypoid drive gear and drive pinion shaft tooth surfaces are damaged, excessively worn, or seized.
(2) The roller bearing on the drive pinion shaft has a worn or damaged roller path.
(3) There is damage, wear, or seizure of the differential bevel pinion, differential bevel gear, washer, pinion shaft, and straight pin.
(4) The differential case has worn or damaged sliding surfaces.

ASSEMBLY

Replace gaskets with new ones.

1) Assembling parts in transmission case (LH).

① Interlock plunger (5.56 x 19.6)

Position two interlock plungers (5.56 x 19.6) in holes on the inner wall of left transmission case, one interlock plunger in hole between 1-2 and 3-4 fork rod holes, and one interlock plunger in hole between 3-4 and reverse fork rod holes.

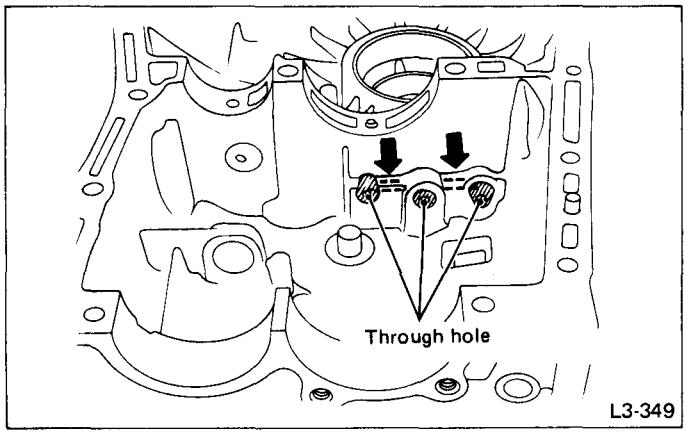

Fig. 46

② Reverse idler gear CP

Position reverse shifter lever CP in L.H. transmission case. Install reverse idler CP and reverse idler gear shaft, and secure with straight pin (6 x 411).

Be sure to install reverse idler shaft from the rear side.

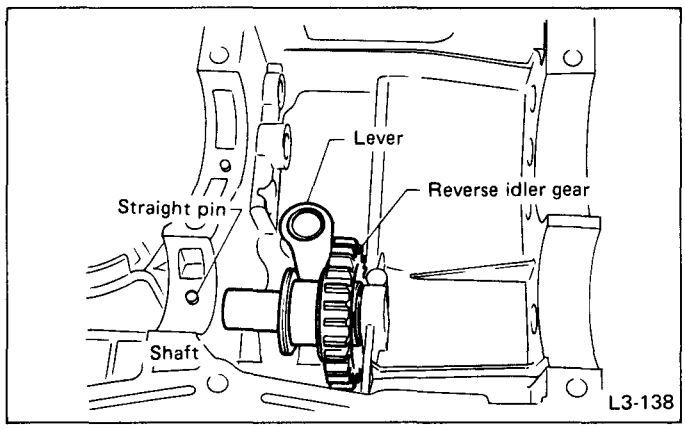

Fig. 47

③ Reverse fork rod and reverse fork rod arm.

Install reverse arm fork spring, ball (5.5563) and interlock plunger (5.56 x 19.6) to reverse fork rod arm. Insert reverse fork rod into hole in reverse fork rod arm, and hold it with outer snap ring using ACCENT BALL INSTALLER (39941 1700).

Apply grease to plunger to prevent it from falling.

④ Plug

Position ball (7.1438), spring and gasket in reverse shifter rod hole on L.H. transmission case, and tighten checking ball plug.

Tightening torque:
20 N·m (2 kg-m, 14 ft-lb)

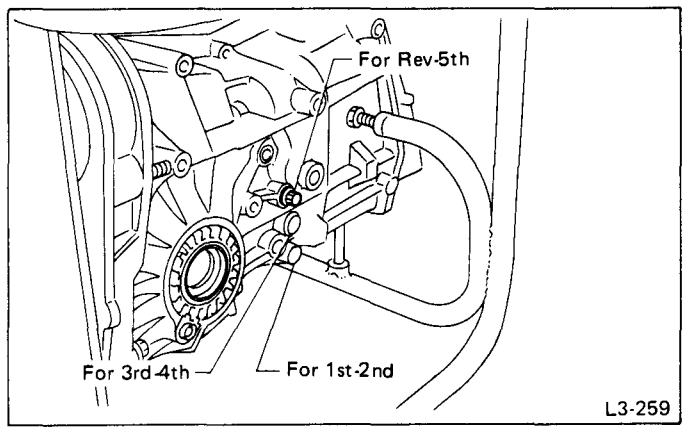

Fig. 48

⑤ Adjustment of reverse idler gear CP position

Move reverse shifter rod toward REV side. Adjust so clearance between reverse idler gear CP and L.H. transmission case wall is 6.0 to 7.5 mm (0.236 to 0.295 in), using reverse shifter lever CP.

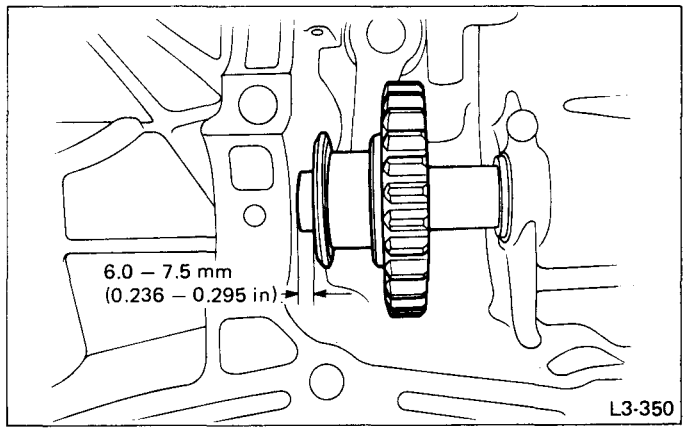

Fig. 49

Reverse shifter lever CP		
Part No.	No.	Remarks
32820AA000	0	Further from case wall.
32820AA010	–	Standard.
32820AA020	2	Closer to case wall.

⑥ Clearance adjustment
After installing a suitable reverse shifter lever CP, shift into Neutral. Adjust so clearance between reverse idler gear CP and L.H. transmission case wall is 0 to 0.5 mm (0 to 0.020 in), using washer(s).

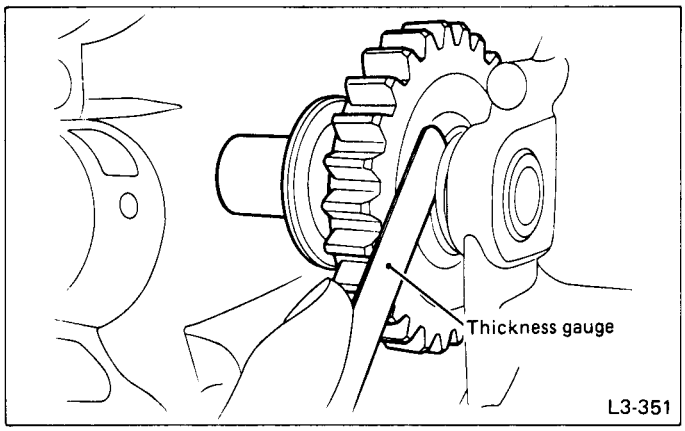

Fig. 50

Washer (20.5 x 26 x t)	
Part No.	Thickness mm (in)
803020151	0.4 (0.016)
803020152	1.1 (0.043)
803020153	1.5 (0.059)
803020154	1.9 (0.075)
803020155	2.3 (0.091)

⑦ Rod and fork
(1) Install interlock plunger (3 x 11.9) onto 3-4 fork rod.

Apply a coat of grease to plunger to prevent it from falling.

(2) Install 3-4 fork rod into 3-4 shifter fork CP via the hole on the rear of L.H. transmission case. Align the holes in rod and fork, and drive straight pin (6 x 22) into these holes using STRAIGHT PIN REMOVER (398791600).

a. Set reverse fork rod to Neutral.
b. Make sure interlock plunger (installed before) is on the reverse fork rod side.

(3) Install 1-2 fork rod into 1-2 shifter fork CP via the hole on the rear of L.H. transmission case. Align the holes in rod and fork, and drive straight pin (6 x 22) into these holes using STRAIGHT PIN REMOVER (398791600).

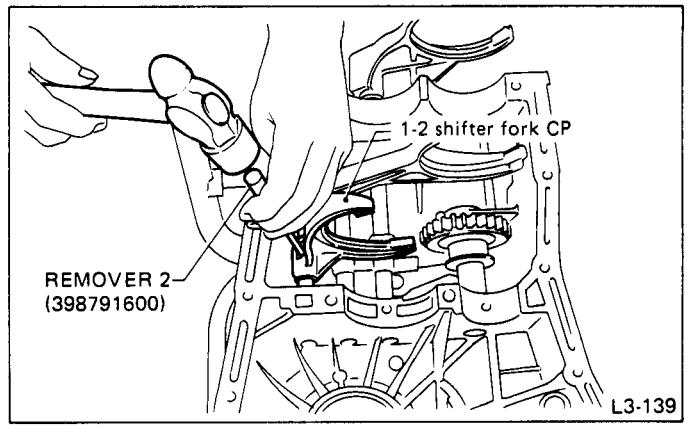

Fig. 51

a. Set other rods to Neutral.
b. Make sure interlock plunger (5.56 x 19.6) is on the 3-4 fork rod side.

(4) Install 5th shifter fork CP onto the rear of reverse fork rod. Align holes in the two parts and drive straight pin into place.

⑧ Plug
Position balls (7.1438 mm dia.), checking ball springs and gaskets into 3-4 and 1-2 rod holes, and install plugs.

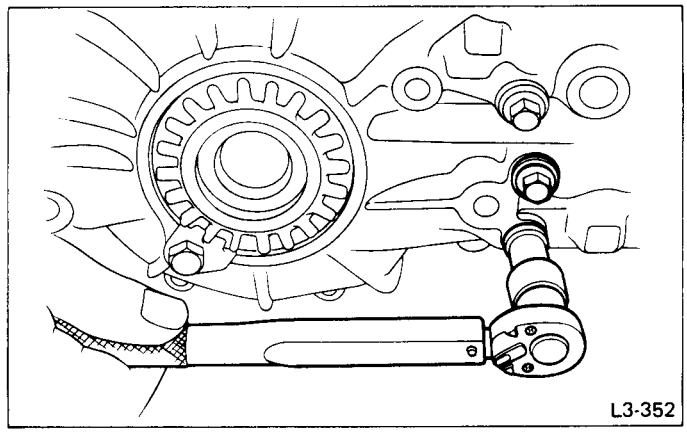

Fig. 52

Tightening torque:
20 N·m (2 kg-m, 14 ft-lb)

2) Alignment marks/figures on hypoid gear set.

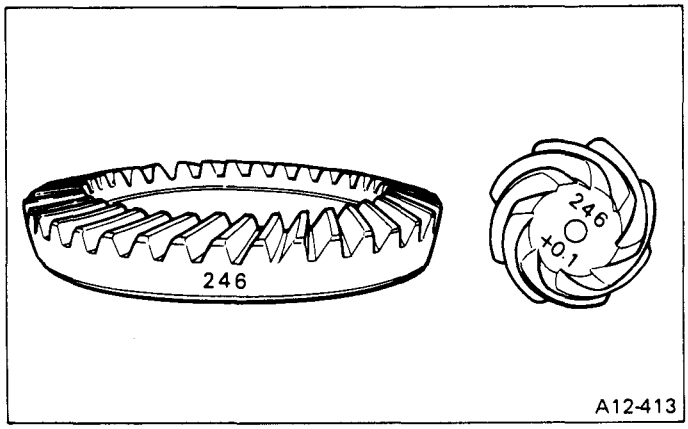

Fig. 53

The upper figure on drive pinion is the match number for combining it with crown gear. The lower figure is for shim adjustment. If no lower figure is shown, the value is zero. The figure on crown gear indicates a number for combination with drive pinion.

3) Adjustment of drive pinion shim

(1) Place drive pinion shaft on transmission main case (R.H.) without shim and tighten drive pinion.

Tightening torque:
26 – 32 N·m (2.7 – 3.3 kg-m, 20 – 24 ft-lb)

(2) Inspection and adjustment of GAUGE ASSY (499917500).

a. Loosen the two bolts and adjust so that the scale indicates 0.5 correctly when the plate end and the scale end are on the same level.

b. Tighten two bolts.

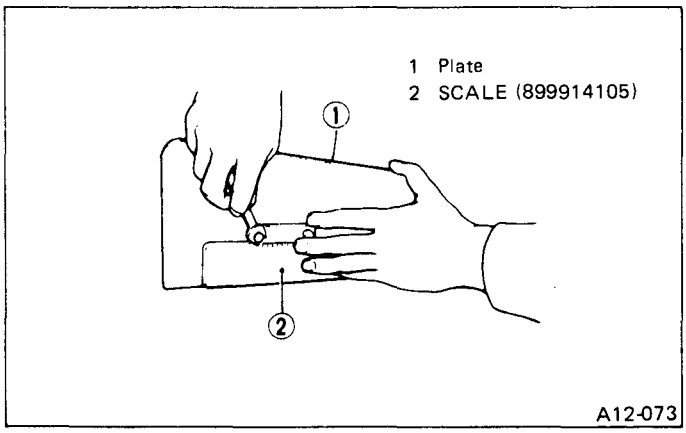

Fig. 54

(3) Position the gauge by inserting the knock pin of gauge into the knock hole in the transmission case.

(4) Slide the drive pinion gauge scale with finger tip and read the value at the point where it matches with the end face of drive pinion.

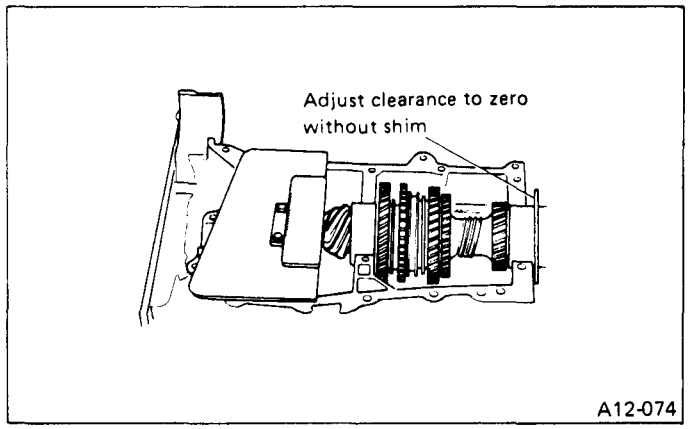

Fig. 55

(5) The thickness of shim shall be determined by adding the value indicated on drive pinion to the value indicated on the gauge. (Add if the figure on drive pinion is prefixed by + and subtract if the figure is prefixed by –.)

Select one to three shims from the next table for the value determined as described above and take a shim thickness which is closest to the said value.

Drive pinion shim	
Part No.	Thickness mm (in)
32295AA030	0.150 (0.0059)
32295AA040	0.175 (0.0069)
32295AA050	0.200 (0.0079)
32295AA060	0.225 (0.0089)
32295AA070	0.250 (0.0098)
32295AA080	0.275 (0.0108)
32295AA090	0.300 (0.0118)
32295AA100	0.500 (0.0197)

4) Differential ASSY

Install differential ASSY onto L.H. transmission case.

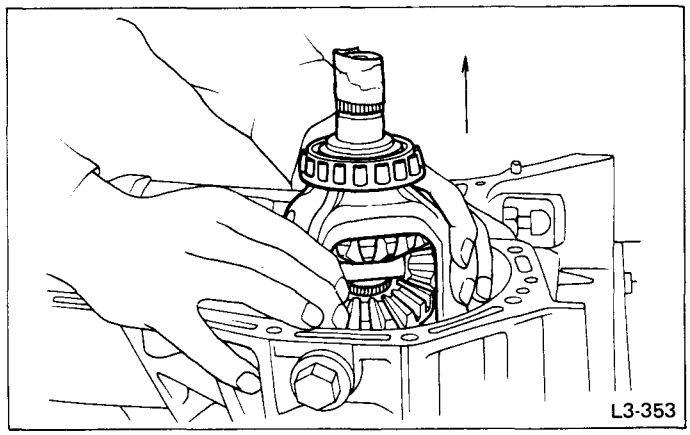

Fig. 56

a. Wrap the left and right splined sections of axle shaft with vinyl tape to prevent scratches.
b. Be careful not to fold the sealing lip of oil seal.

5) Transmission main shaft ASSY
Install needle bearing and oil seal onto the front of transmission main shaft ASSY, and position in LH transmission case.

a. Wrap clutch splined section with vinyl tape to prevent damage to oil seal.
b. Apply grease (Unilube #2 or equivalent) to the sealing lip of oil seal.
c. Align the end face of seal with surface A of LH transmission main case when installing oil seal.

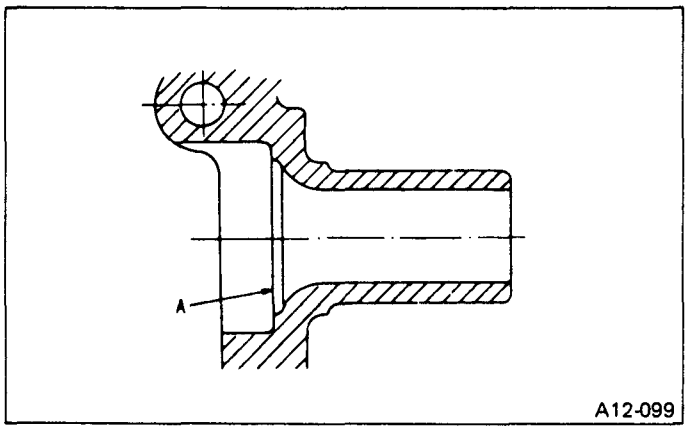

Fig. 57

d. Be careful not to drop oil seal when installing RH transmission main case.
e. Make sure straight pin is positioned in hole in needle bearing's outer race.

6) Install drive pinion with shims selected before into transmission case.

Ensure that the knock pin of the case is fitted into the hole in the bearing outer race.

7) Selection of suitable 1st-2nd, 3rd-4th and 5th shifter fork CPs.
Set transmission main shaft ASSY and drive pinion shaft ASSY in position (so there is no clearance between the two when moved all the way to the front). Select suitable 1st-2nd, 3rd-4th and 5th shifter fork CP's so that coupling sleeve and reverse driven gear are positioned in the center of their synchronizing mechanisms.

1st-2nd shifter fork CP			3rd-4th shifter fork CP			5th shifter fork CP		
Part No.	No.	Remarks	Part No.	No.	Remarks	Part No.	No.	Remarks
32804AA031	1	Moves 0.2 mm (0.008 in) closer to 1st gear	32810AA031 *32810AA060	1	Moves 0.2 mm (0.008 in) closer to 4th gear	32812AA004 *32812AA060	1	Moves 0.2 mm (0.008 in) closer to 5th gear
32804AA041	–	Positions in the center	32810AA041 *32810AA070	–	Positions in the center	32812AA014 *32812AA070	–	Positions in the center
32804AA051	3	Moves 0.2 mm (0.008 in) closer to 2nd gear	32810AA051 *32810AA100	3	Moves 0.2 mm (0.008 in) closer to 3rd gear	32812AA024 *32812AA100	3	Moves 0.2 mm (0.008 in) closer to 5th gear

* Full-time 4WD

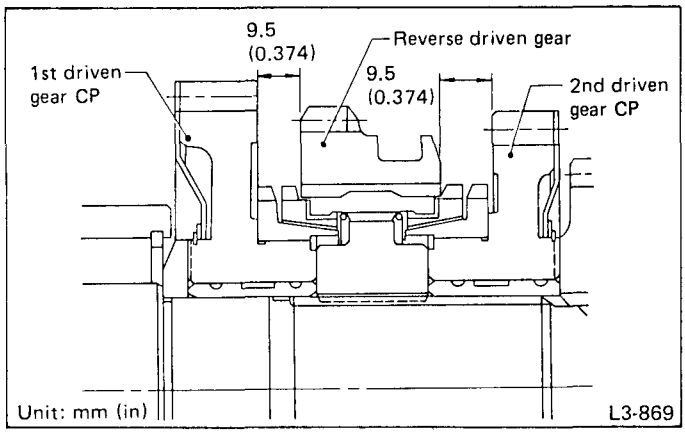

Fig. 58 1st-2nd shifter fork

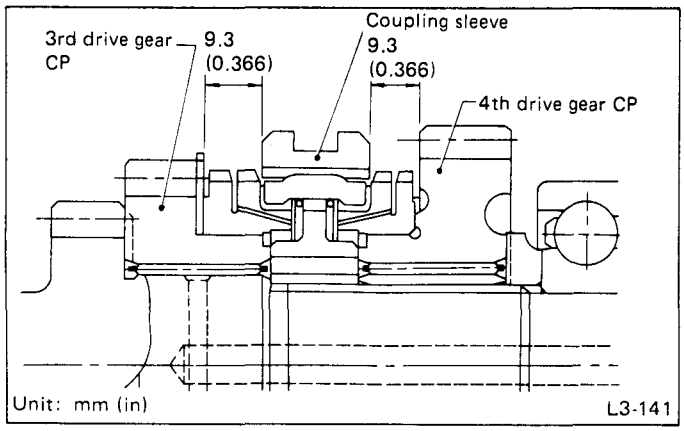

Fig. 59 3rd-4th shifter fork

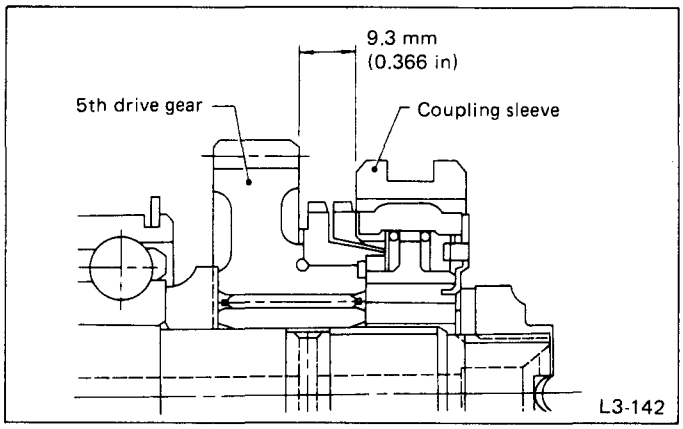

Fig. 60 5th shifter fork

8) Inspection of rod end clearance

Measure rod end clearances A and B. If any clearance is not within specifications, replace rod of fork as required.

A: 3-4 – 5	0.6 – 1.4 mm (0.024 – 0.055 in)
B: 1-2 – 3-4	0.5 – 1.5 mm (0.020 – 0.059 in)

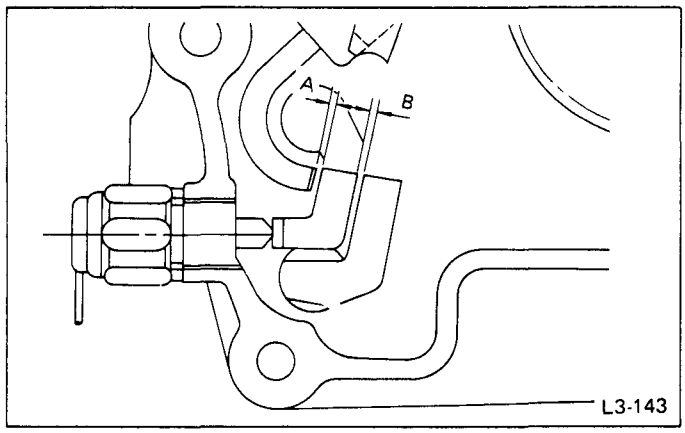

Fig. 61

9) Wipe off grease, oil and dust on the mating surfaces of transmission cases with white gasoline, and apply liquid gasket (Fuji Bond "C" or equivalent), and then put case (RH) and (LH) together.

10) Tighten 17 bolts with bracket, clip, etc. in the following sequence.

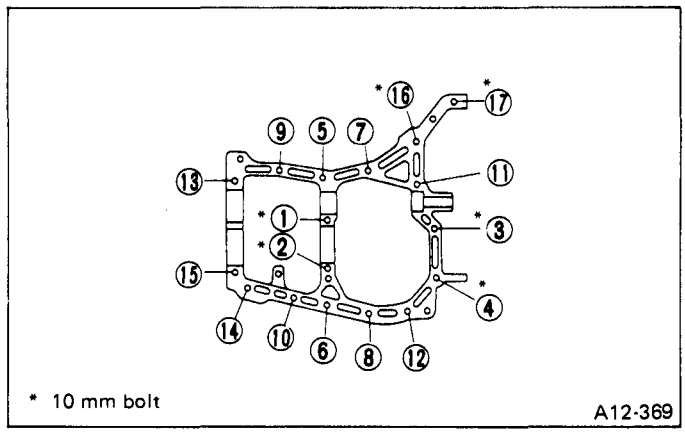

Fig. 62

Tightening torque:
8 mm bolt
23 – 26 N·m (2.3 – 2.7 kg-m, 17 – 20 ft-lb)
10 mm bolt
36 – 42 N·m (3.7 – 4.3 kg-m, 27 – 31 ft-lb)

a. Insert bolts from the bottom and tighten nuts at the top.
b. Put cases together so that drive pinion shim and input shaft holder shim are not caught up in between.
c. Confirm that counter gear and speedometer gear are meshed, and high-low shifter shaft is inserted perfectly.

11) Tighten ball bearing attaching bolts at the drive pinion rear.

Tightening torque:
26 – 32 N·m
(2.7 – 3.3 kg-m, 20 – 24 ft-lb)

12) Backlash adjustment of hypoid gear and preload adjustment of roller bearing.

a. Place the transmission with case (LH) facing downward and put WEIGHT (399780104) on bearing cup.

b. Screw retainer ASSY into case (LH) from the bottom with WRENCH (499787000). Fit HANDLE (499927100) on the transmission main shaft. Shift gear into 5th and turn the shaft several times. Screw in the retainer while turning HANDLE until a slight resistance is felt on WRENCH.

This is the contact point of hypoid gear and drive pinion shaft. Repeat the above sequence several times to ensure the contact point.

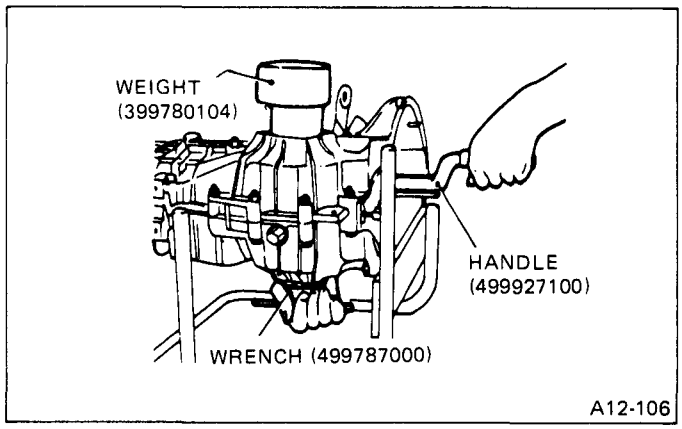

Fig. 63

c. Remove weight and screw in retainer without O-ring on the upper side and stop at the point where slight resistance is felt.

At this point, the backlash between the hypoid gear and drive pinion shaft is zero.

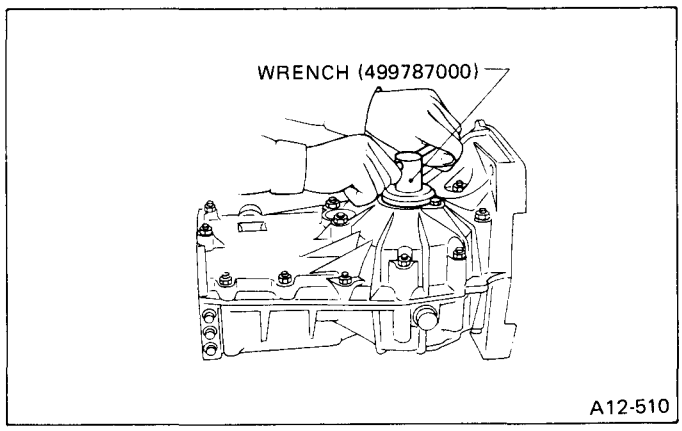

Fig. 64

d. Fit lock plate. Loosen the retainer on the lower side by 1½ notches of lock plate and turn in the retainer on the upper side by the same amount in order to obtain the backlash.

The notch on the lock plate moves by ½ notch if the plate is turned upside down.

e. Turn in the retainer on the upper side additionally by ½ to 1 notch in order to apply preload on taper roller bearing.

f. Tighten temporarily both the upper and lower lock plates and mark both holder and lock plate for later readjustment.

g. Turn transmission main shaft dozens of turns while tapping around retainer lightly with plastic hammer.

h. Set DIAL GAUGE (498247100) and MAGNET BASE (498247001). Insert the needle through transmission oil drain plug hole so that the needle comes in contact with the tooth surface at a right angle and check the backlash.

Backlash:
0.13 – 0.18 mm (0.0051 – 0.0071 in)

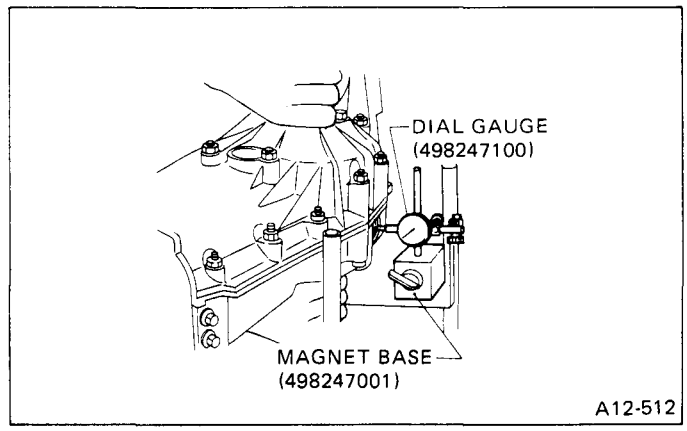

Fig. 65

13) Checking tooth contact of hypoid gear.

Apply a uniform thin coat of red lead on both tooth surfaces of 3 or 4 teeth of the hypoid gear. Move the hypoid gear back and forth by turning the transmission main shaft until a definite contact pattern is developed on hypoid gear, and judge whether face contact is correct. If it is incorrect, make the following correction.

a. Tooth contact is correct.

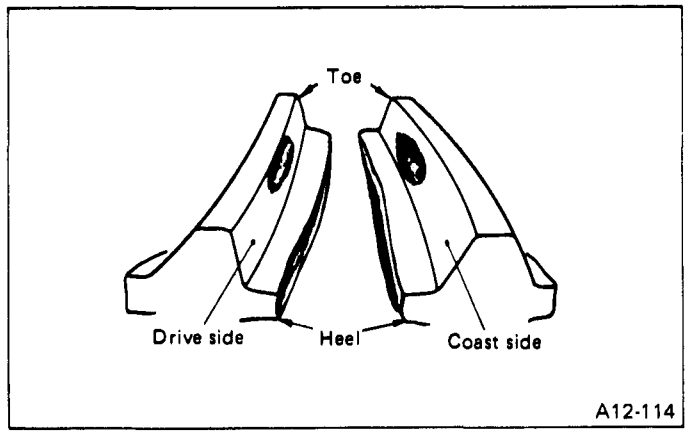

Fig. 66

b. Backlash is excessive.
To reduce backlash, loosen holder on the upper side (case R.H. side) and turn in the holder on the lower side (case L.H. side) by the same amount.

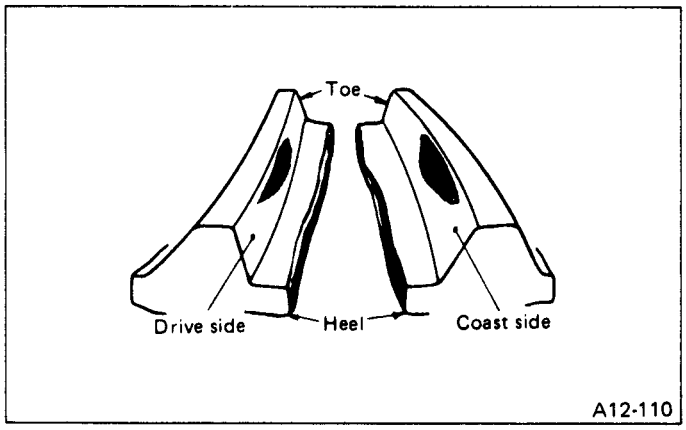

Fig. 67

c. Backlash is insufficient.
To increase backlash, loosen holder on the lower side (case L.H. side) and turn in the holder on the upper side (case R.H. side) by the same amount.

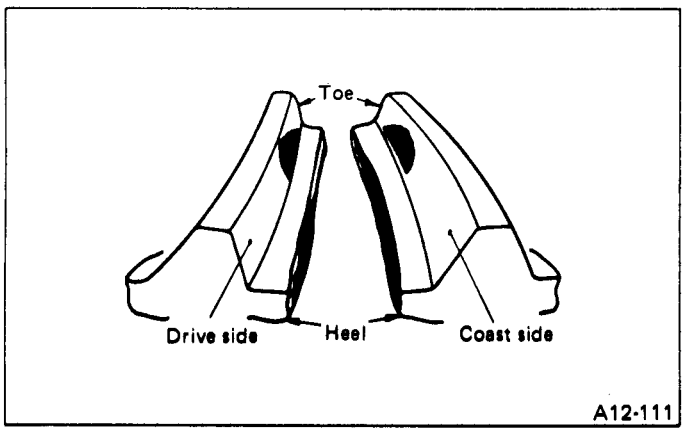

Fig. 68

d. The drive pinion shim selected before is too thick. Reduce its thickness.

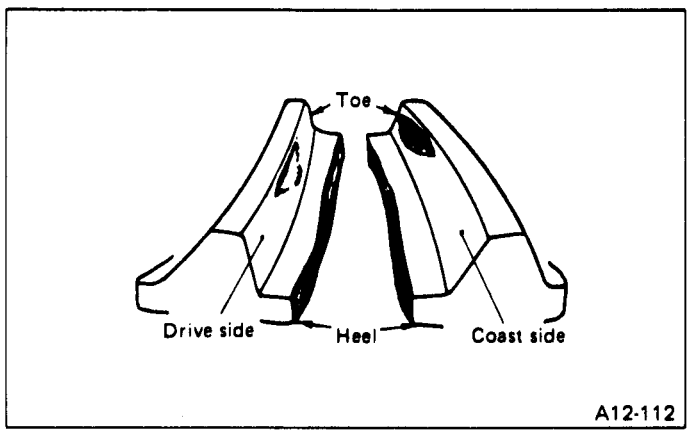

Fig. 69

e. The drive pinion shim selected before is too thin. Increase its thickness.

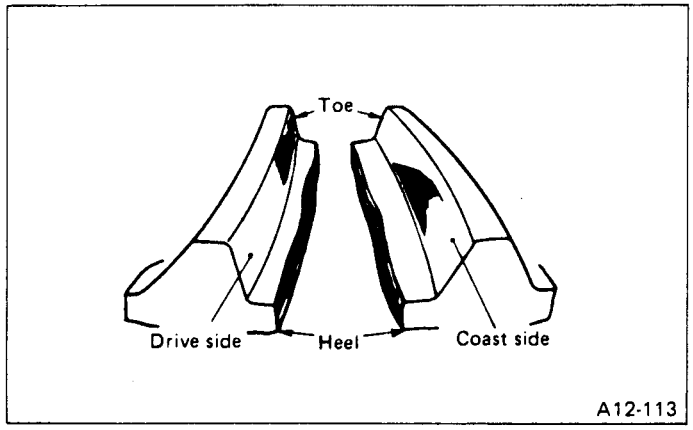

Fig. 70

14) After checking the tooth contact of hypoid gears, remove the lock plate. Then loosen retainer until the O-ring groove appears. Fit O-ring into the groove and tighten retainer into the position where retainer has been tightened in.
Tighten lock plate.

Tightening torque:
22 – 27 N·m
(2.2 – 2.8 kg-m, 16 – 20 ft-lb)

Carry out this job on both upper and lower retainers.

15) Selecting of main shaft rear plate.
Using DEPTH GAUGE (498147000), measure the amount (A) of ball bearing protrusion from transmission main case surface and select the proper plate in the following table.

Dimension A mm (in)	Part No.	Identification
4.0 – 4.13 (0.1575 – 0.1626)	32294AA040	1
3.87 – 4.0 (0.1524 – 0.1575)	32294AA050	2

Before measuring, tap the end of main shaft by the plastic hammer lightly in order to make the clearance zero between the main case surface and the moving flange of bearing.

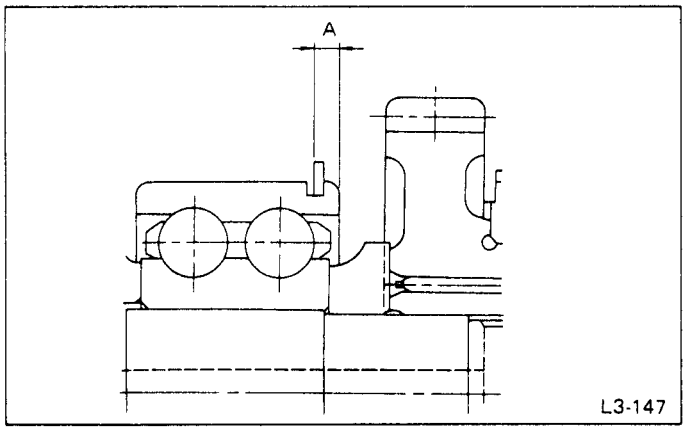

Fig. 71

16) Transfer case & shifter ASSY
Secure transfer case & shifter ASSY to transmission case with eight bolts.

Tightening torque:
25 N·m (25 kg-m, 18 ft-lb)

Be sure gasket is positioned on the rear of the case.

17) Tighten selector arm.
Secure selector arm to shifter arm CP with shifter fork screw. Shifter arm CP should be caught by pawl of rod.

Tightening torque:
10 N·m (1.0 kg-m, 7 ft-lb)

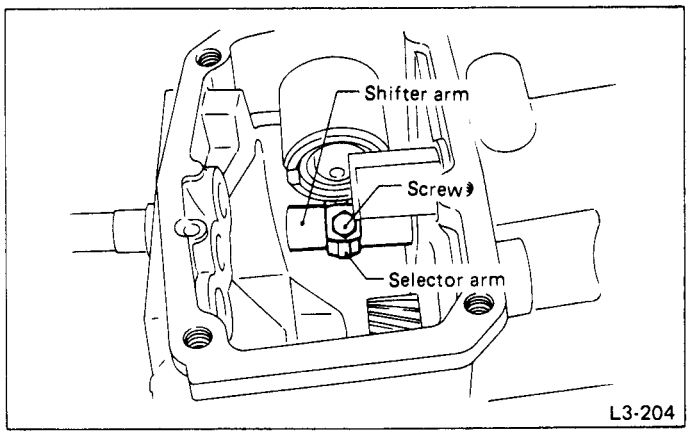

Fig. 72

18) Install ball (7.1438), reverse accent spring, aluminum gasket and plug in that order.

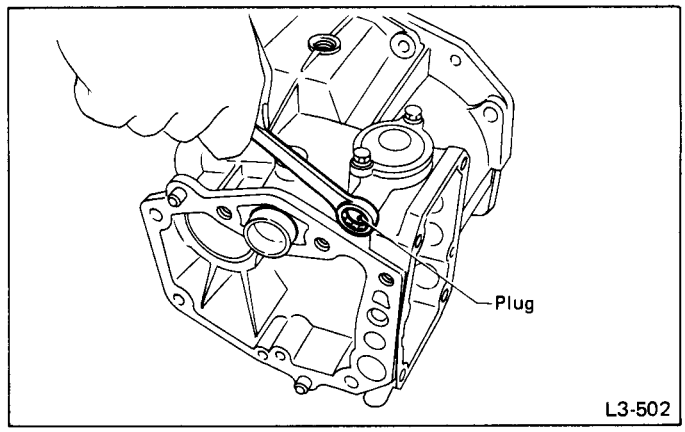

Fig. 73

Tightening torque:
10 N·m (1.0 kg-m, 7 ft-lb)

19) Neutral position adjustment
(1) Shift gear into 3rd gear position.
(2) Shifter arm turns lightly toward the 1st/2nd gear side but heavily toward the reverse gear side because of the function of the return spring, until arm contacts the stopper.
(3) Make adjustment so that the heavy stroke (reverse side) is a little more than the light stroke (1st/2nd side).
(4) To adjust, remove bolts holding reverse check sleeve ASSY to the case, move sleeve ASSY outward, and place adjustment shim (0 to 1 ea.) between sleeve ASSY and case to adjust the clearance.

Be careful not to break O-ring when placing shim(s).

One shim's thickness: 0.15 mm (0.0059 in)
0.30 mm (0.0118 in)

- When shim is removed, the neutral position will move closer to reverse; when shim is added, the neutral position will move closer to 1st gear.
- If shims alone cannot adjust the clearance, replace reverse accent shaft and re-adjust.

Reverse accent shaft		
Part No.	Mark	Remarks
32188AA020	A	Neutral position is closer to 1st gear.
32188AA002	No mark	Standard
32188AA030	C	Neutral position is closer to reverse gear.

20) Reverse check plate adjustment.
Shift shifter arm CP to "5th" and then to reverse to see if reverse check mechanism operates properly. Also check to see if arm returns to Neutral when released from the reverse position. If arm does not return properly, replace reverse check plate.

Reverse check plate			
Part No.	No.	Angle θ	Remarks
32189AA000	0	28°	Arm stops closer to "5th".
32189AA010	1	31°	Arm stops closer to "5th".
32189AA020	2	34°	Standard
32189AA030	3	37°	Arm stops closer to reverse.
32189AA040	4	40°	Arm stops closer to reverse.

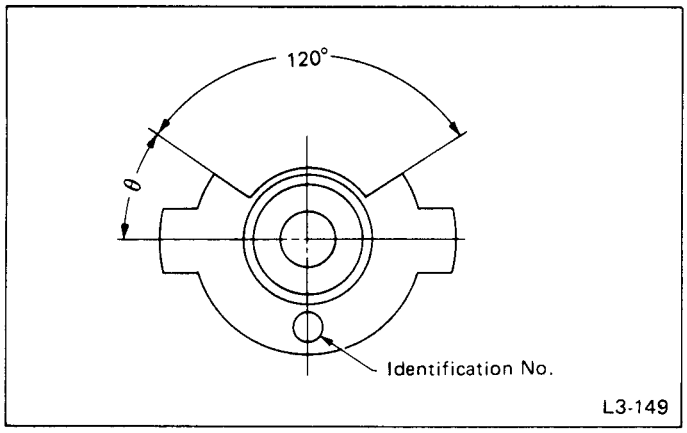

Fig. 74

21) Install extension with transfer gasket and tighten bolts.

Tightening torque:
34 – 40 N·m
(3.5 – 4.1 kg-m, 25 – 30 ft-lb)

While installing, the gears (transfer drive and driven) should engage each other.

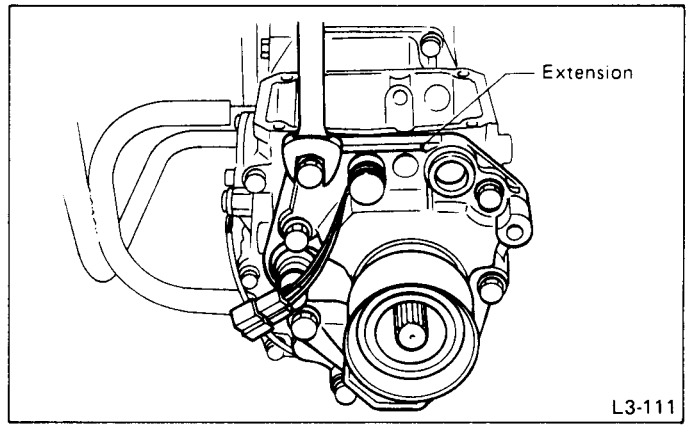

Fig. 75

22) Installing transfer shifter fork
Install transfer shifter fork to coupling sleeve and align the cutout section of fork with arm of transfer shifter shaft.

Apply a coat of oil to nylon pawl of fork.

23) Installing spring and ball
Install checking ball spring and ball (6.35) in transfer case.

Be careful not to drop ball and spring into transfer case.

24) Installing transfer shifted rod
Insert transfer shifter rod into bore in the upper center of extension with the cutout section facing the front. Pass it through transfer shifter fork while positioning ball and spring in the hole at the center of transfer case.
Align the hole in transfer shifter fork with that in shifter rod and drive spring pin (5 x 25) into the holes.

a. Be sure each end of spring pin protrudes slightly beyond the holes when installing.
b. Position ball with the cutout section of shifter rod facing down. Be careful not to drop the ball.
c. To avoid scratching oil seal, apply a coat of oil to shifter rod before installing.

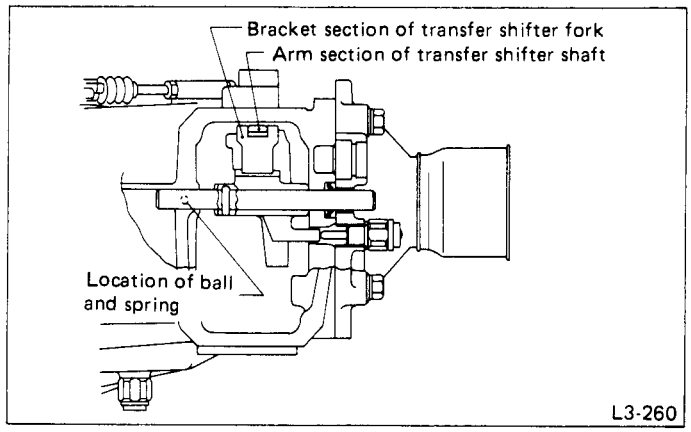

Fig. 76

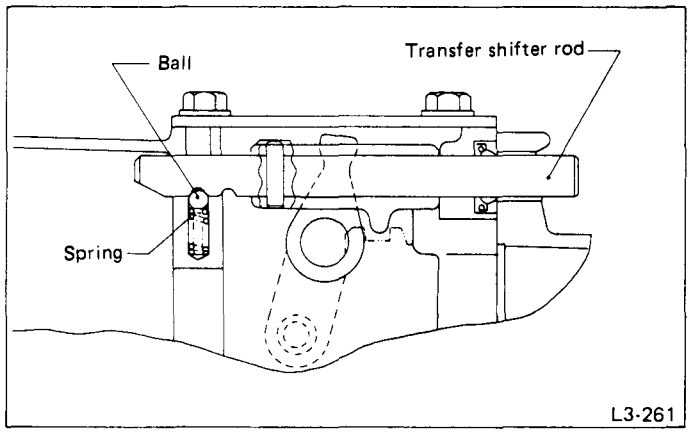

Fig. 77

25) Installing actuator & cable ASSY

Connect the end of cable and shifter lever with an 8-mm clevis pin and secure with a snap pin. Secure actuator to the left side of transmission case with three 8-mm bolts & washers. Secure cable plate to transfer case with two 8-mm bolts & washers. All bolts should be tightened to the specified torque.

Tightening torque:
16 N·m (1.6 kg-m, 12 ft-lb)

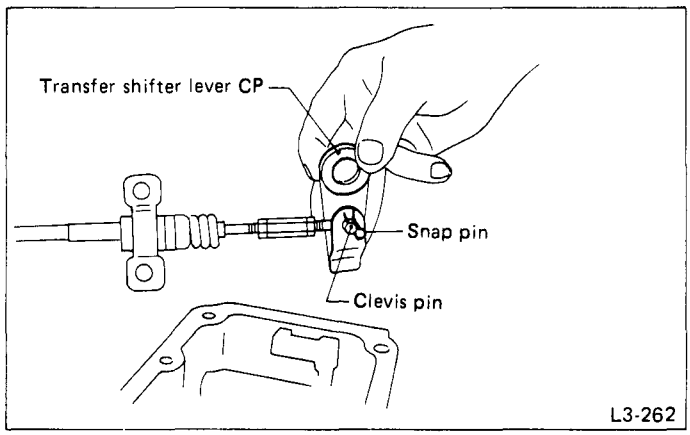

Fig. 78

26) Adjustment of cable

(1) Connect transfer shifter lever to transfer shifter shaft. Align the hole in transfer shifter lever with that in shifter shaft and drive spring pin into the holes.

(2) Connect a hose to pipe on the outside of actuator and apply vacuum pressure until cable is shortened as much as possible.

Use a vacuum pump or intake manifold to create vacuum.

(3) While applying vacuum pressure, turn turnbuckle in the direction that shortens cable until it no longer turns. Then, back off turnbuckle 180° and tighten two lock nuts to the specified torque.

Tightening torque:
5 N·m (0.5 kg-m, 3.6 ft-lb)

(4) Operate actuator to ensure that shifting from front-wheel drive to 4-wheel drive is smooth.

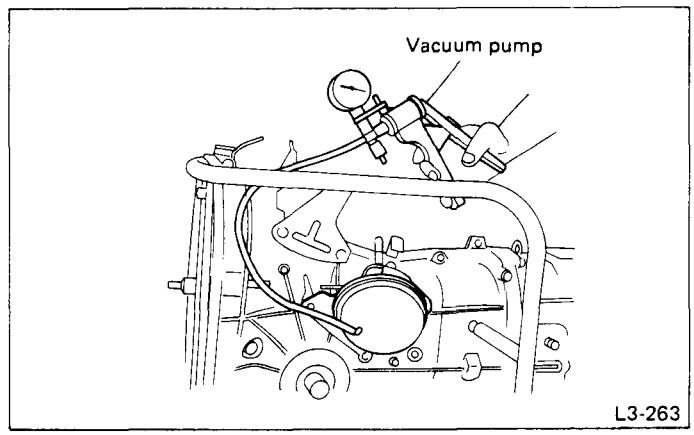

Fig. 79

27) Install transfer cover with gasket and tighten bolts.

Tightening torque:
18 – 22 N·m (1.8 – 2.2 kg-m, 13 – 16 ft-lb)

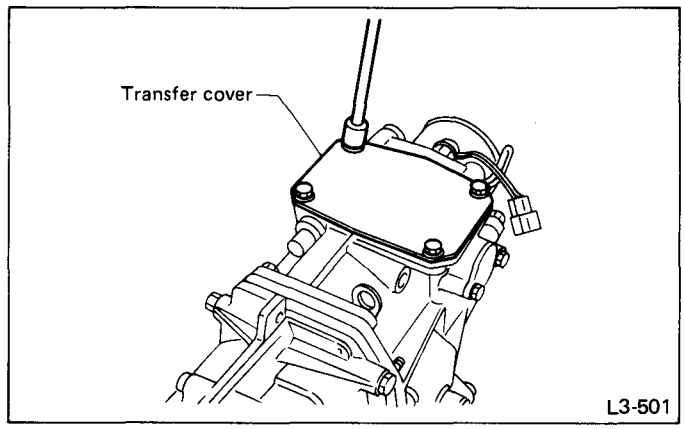

Fig. 80

28) Release lever

(1) Install retaining spring on release lever.

(2) Secure release lever pivot to LH transmission case.

Tightening torque:
16 N·m (1.6 kg-m, 12 ft-lb)

(3) Push release lever against pivot. With the lever held in that position, twist it to the left and right so that retaining spring moves onto the stepped surface on the rear of pivot. (Proper positioning of retaining spring can be checked through access window on the case.)
(4) Install release bearing sleeve ASSY, and hold with two clutch sleeve clips.
(5) Install dust release cover onto the case.

[2] Extension & Transfer Gear ASSY

DISASSEMBLY

1) Remove 4WD switch ASSY with a spanner, etc.

Replace aluminum gasket with a new one.

2) Using a snap-ring pliers, remove snap ring (Inner-68) from extension.
3) Remove rear drive shaft by tapping from the rear with an aluminum bar.
4) Put sleeve coupling in drive position, and remove locknut (18 x 10.5) with the TOP-THIRD DRIVEN GEAR HOLDER (899884100).

Remove caulking before taking off locknut.

5) Using the REMOVER (899864110) and REPLACER (398517700), remove ball bearing (20 x 52 x 15).
6) Remove 4th gear thrust washer, transfer driven gear and coupling sleeve from rear drive shaft.
7) Using the REMOVER (899714110) and TRANSMISSION MAIN SHAFT REMOVER (899864100), remove following parts from rear drive shaft.

- Rear shaft driven bushing
- Transfer synchronizer hub
- Rear drive spacer
- Ball bearing (28 x 68 x 18)

ASSEMBLY

1) Install oil seal (35 x 50 x 11) onto the rear of extension CP using INSTALLER (399513600).
2) Install transfer rear oil seal onto extension CP using OIL SEAL INSTALLER (498057200).
3) Install 4WD switch ASSY on extension CP.

Tightening torque:
18 N·m (1.8 kg-m, 13 ft-lb)

Do not forget to install aluminum washer.

4) Install ball bearing onto rear drive shaft with INSTALLER (899580100) and RETAINER (899714100).

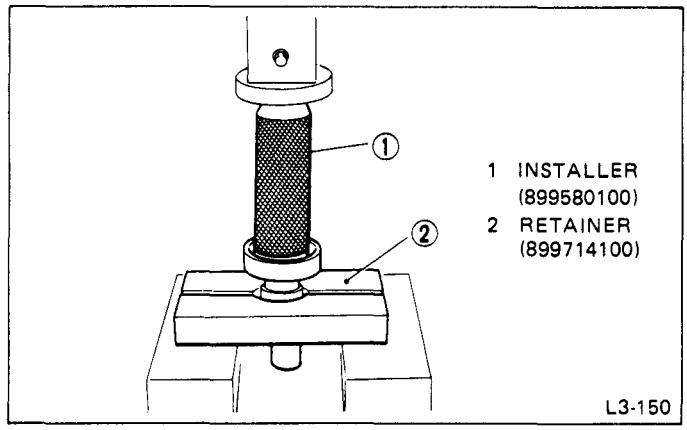

Fig. 81

5) Install rear drive spacer, synchronizer hub and sleeve onto rear drive shaft.

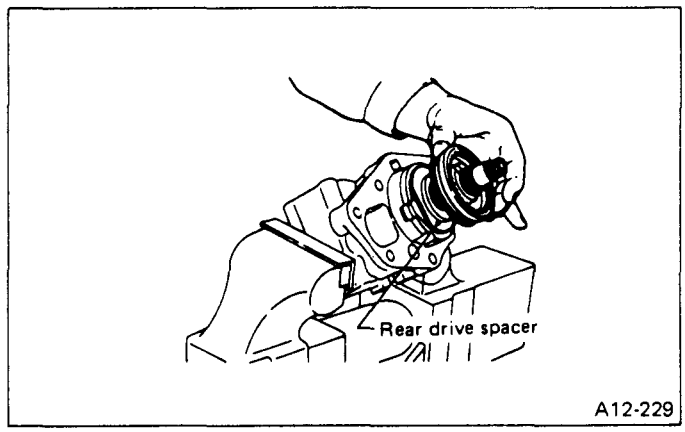

Fig. 82

6) Install transfer driven gear bushing onto rear drive shaft with INSTALLER (899874100) and RETAINER (899714100).
7) Install coupling sleeve, transfer driven gear and thrust washer onto rear drive shaft.
8) Install ball bearing onto rear drive shaft with PRESS ASSY (899754112) and RETAINER (899714100).
9) Shift sleeve to the drive position and tighten lock nut with HOLDER (899884100) and SOCKET WRENCH (899988608).

Tightening torque:
73 – 84 N·m
(7.4 – 8.6 kg-m, 54 – 62 ft-lb)

Stake the lock nut at four positions after tightening.

10) Hammer rear drive shaft into extension with a plastic hammer. And fit snap ring to the groove inside of extension.

[3] Transfer Case & Shifter ASSY

DISASSEMBLY

1) Pull out shifter arm CP and selector arm from transfer case.
2) Remove oil guide from transfer case.
3) Remove back-up light switch ASSY and neutral switch ASSY.

a. Some models are not equipped with neutral switch ASSY.
b. Replace aluminum gasket with a new one.

4) Remove reverse check sleeve ASSY by loosening 6-mm bolt and washer ASSY in two places.

a. Be careful not to damage O-ring fitted in reverse check sleeve.
b. 0 to 3 shim(s) are inserted between reverse check sleeve and transfer case. Be careful not to break them.

5) Disassembling reverse check sleeve ASSY.

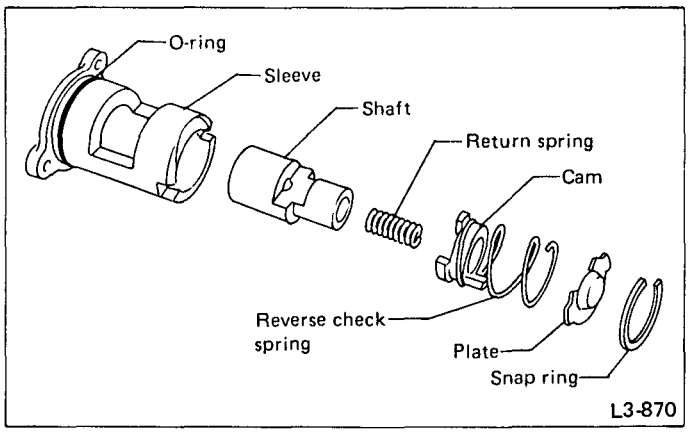

Fig. 83

① Using a standard screwdriver, remove snap ring (inner 28).

Replace snap ring with a new one if deformed or weakened.

② Remove reverse check plate.
③ Take out return reverse spring and reverse check spring.
④ Take out reverse check cam.
⑤ Take out reverse accent shaft.
⑥ Remove O-ring (35.4 x 1.5).

ASSEMBLY

1) Install needle bearing race into bore in transfer case.

Be careful not to damage stopper on transfer case.

2) Install back lamp switch ASSY and neutral switch ASSY on transfer case.

Tightening torque:
18 N·m (1.8 kg-m, 13 ft-lb)

a. Some models are not equipped with neutral switch ASSY.
b. Do not forget to install aluminum washer.

3) Install oil seal (18 x 28 x 7) into bore in transfer case using OIL SEAL INSTALLER (498057000).
4) Install oil guide.

Make sure oil guide is secure and tight.

5) Assembling reverse check sleeve ASSY.
① Install reverse accent shaft, check cam, return spring and check spring onto reverse check sleeve.

Be sure the bent section of reverse check spring is positioned in the groove in check cam.

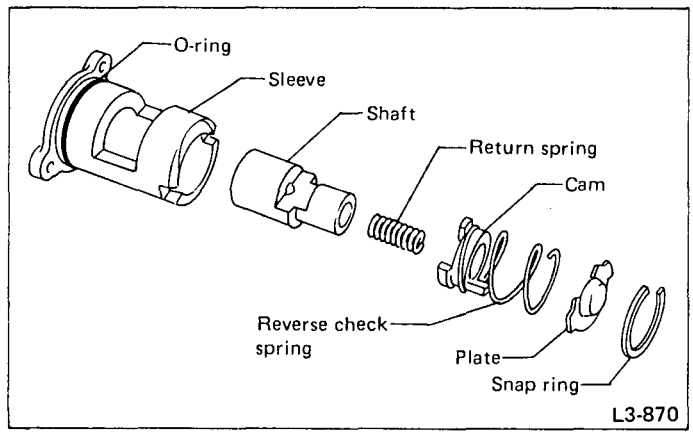

Fig. 84

② a. Hook the bent section of reverse check spring over reverse check plate.
b. Rotate cam so that the protrusion of reverse check cam is at the opening in plate.
c. With cam held in that position, install plate onto reverse check sleeve and hold with snap ring (Inner-28).
d. Position O-ring (35.4 x 1.5) in groove in sleeve.

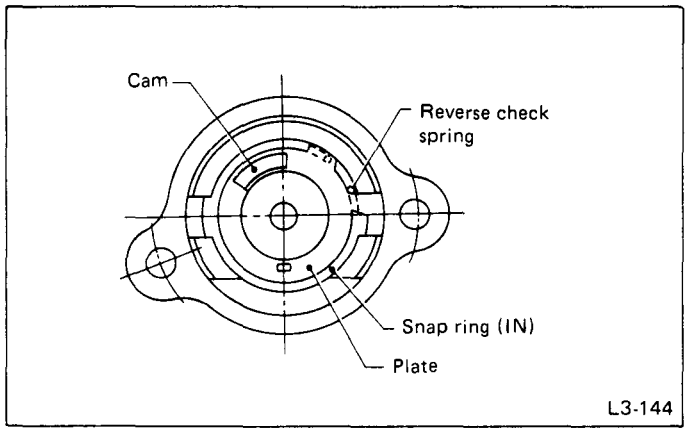

Fig. 85

a. Make sure the cutout section of reverse accent shaft is aligned with the opening in reverse check sleeve.
b. Spin cam by hand for smooth rotation.
If it does not return properly, replace reverse check spring.
c. Move cam and shaft all the way toward plate and release.
If cam does not return properly, replace reverse check spring; if shaft does not, check for scratches on the inner surface of sleeve. If sleeve is in good order, replace spring.
d. Select a suitable reverse check plate by referring to "Neutral Position Adjustment."

6) a. Install reverse check sleeve ASSY onto transfer case and tighten with two bolt & washers.

Tightening torque:
10 N·m (1.0 kg-m, 7 ft-lb)

b. Install shifter arm CP into the partition from the front while inserting selector arm into the opening in sleeve ASSY. Pass shaft through hole in selector arm until its end comes out of the rear of transfer case.

Apply a coat of gear oil to shifter arm CP. Also make sure oil seal (18 x 28 x 7) is positioned properly.

7) Press oil seal (15 x 25 x 2) completely into the right boss section of transfer case.
8) Press oil seal (13 x 22 x 6) completely into bore for transfer shifter rod at rear of transfer case.
9) Insert transfer shifter shaft into the right side of transfer case from inside.

[4] Drive Pinion Shaft ASSY

DISASSEMBLY

Remove caulking before taking off locknut.

1) Loosen locknut (22 x 13) using SOCKET WRENCH (35) (499987003) and HOLDER (899884100).

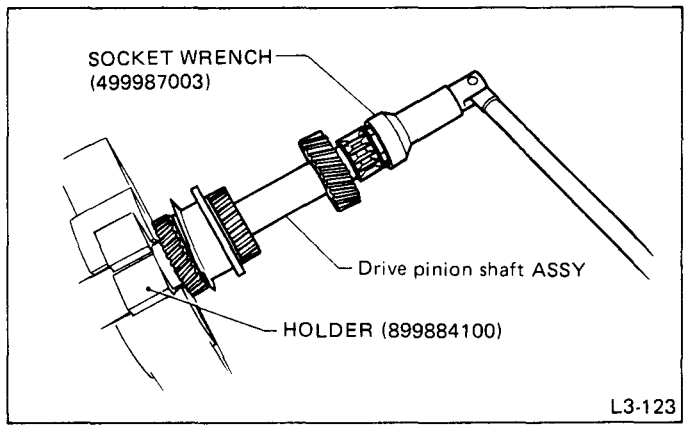

Fig. 86

2) Using TRANSMISSION SHAFT REMOVER (899864100) and REMOVER (899714110), remove 5th needle bearing race, needle bearing (32 x 42 x 25.8), and transfer drive gear.
3) Remove drive pinion collar.
4) Remove 5th driven gear using 5TH DRIVEN GEAR REMOVER (498077000) and a press.
5) Remove woodruff key (5 x 6.5 x 1.6).
6) Using REMOVER (899714110) and a press, remove ball bearing (28 x 74 x 28) and 3rd and 4th driven gear.

Tool No.	Tool name
899714110	REMOVER

7) Remove 2nd driven gear CP.
8) Using REMOVER (899714110) and a press, remove 1st driven gear CP, 2nd gear bushing, and gear & hub ASSY.

Remove key before removing 2nd gear bushing.

9) Using 5th driven gear remover and a press, remove 1st gear bushing, 1st driven gear thrust plate, and roller bearing (41 x 71 x 23).

Replace roller bearing (41 x 71 x 23) with a new one if this disassembly is performed.

ASSEMBLY

1) Assemble gear & hub ASSY.

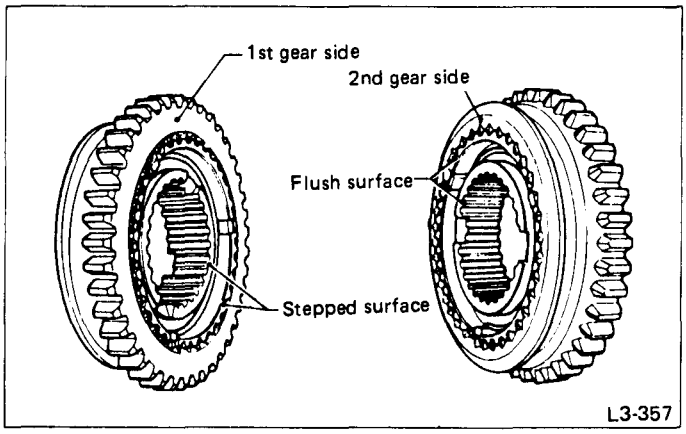

Fig. 87

Position open ends of springs 120° apart.

2) Drive roller bearing onto drive pinion shaft and 1st driven gear thrust washer using 1ST-2ND BUSHING INSTALLER (499277100) and 4TH-5TH RACE INSTALLER (499877000).

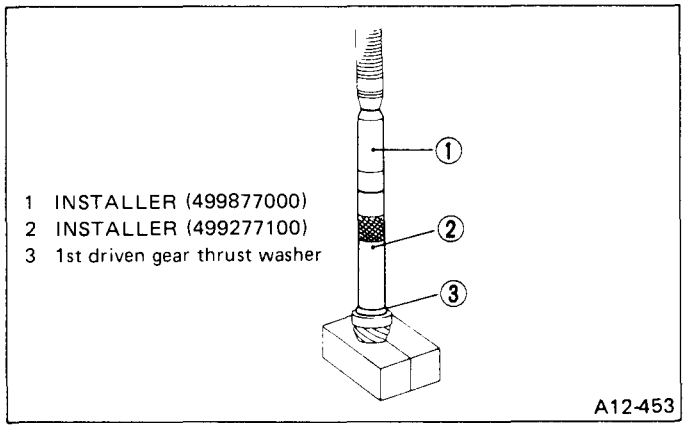

Fig. 88

3) Install driven gear bushing (42) onto drive pinion shaft using the same tools as in step (2) above.

Bushing may be installed with either side up.

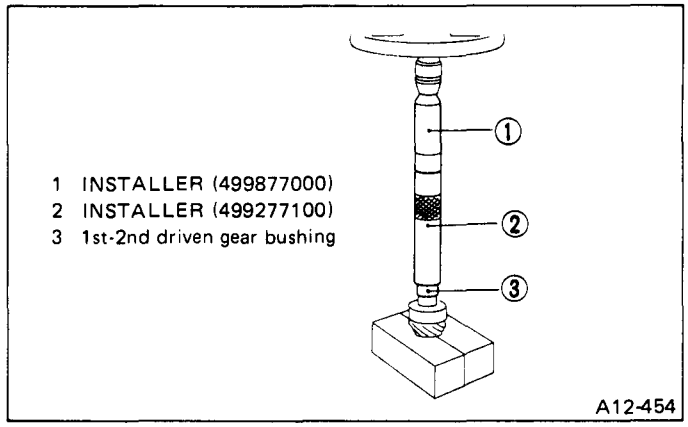

Fig. 89

4) Install 1st driven gear, 1st-2nd balk ring and gear & hub ASSY (already assembled in previous step) to drive pinion shaft.

Align ring groove with insert.

5) Install 1st-2nd driven gear bushing to drive pinion shaft.

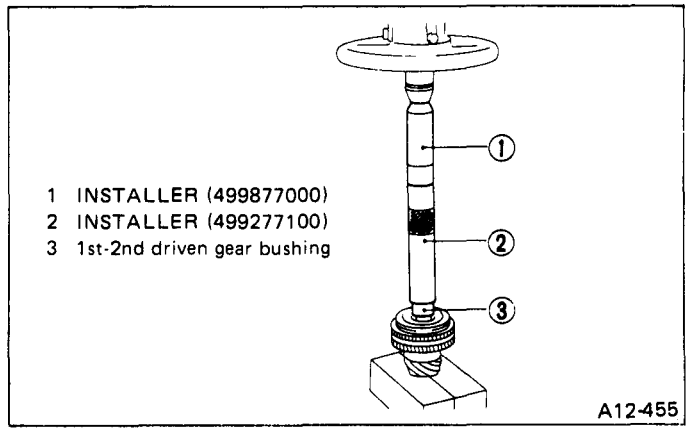

Fig. 90

6) Install 2nd driven gear, 1st-2nd balk ring and key to drive pinion shaft. Then, install 4th-3rd driven gear using the same tools as above.

Tool No.	Tool name
499277100	INSTALLER (1st-2nd bushing)
499877000	INSTALLER (4th-5th race)

7) Install ball bearing (29 x 74 x 38) to drive pinion shaft using 1ST-2ND BUSHING INSTALLER (499277100).

Ball bearing may be installed without using the tool. There should be no problem.

8) Install woodruff key (5 x 6.5 x 1.5) to the rear section of drive pinion shaft. Using 1ST-2ND BUSHING INSTALLER (499277100) and press, install 5th driven gear.

a. Face 5th driven gear in the correct direction.

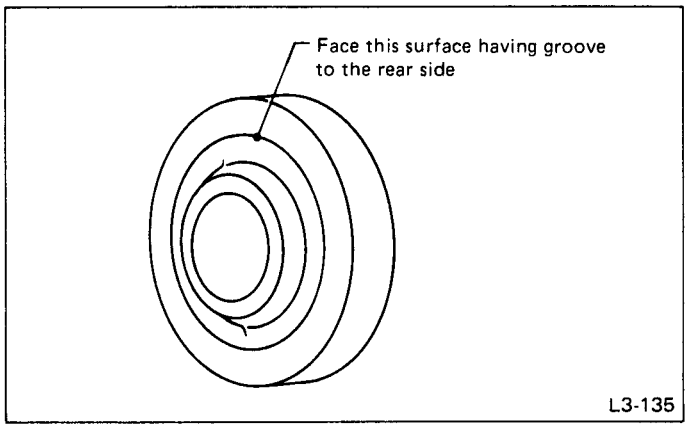

Fig. 91

b. Be careful not to dislocate woodruff key while installing 5th gear.

9) Install drive pinion collar and transfer drive gear. Then, install 5th needle bearing race using 4TH-5TH RACE INSTALLER (499877000) and a press.
10) Install needle bearing and lock washer, then tighten lock nut to the specified torque.

Tool No.	Tool name
499987003	SOCKET WRENCH (35)
899884100	HOLDER

Tightening torque:
112 – 124 N·m (11.4 – 12.6 kg-m, 82 – 91 ft-lb)

Secure lock nut in two places.

[5] Transmission Main Shaft ASSY

DISASSEMBLY

1) Put vinyl tape around main shaft splines to protect oil seal from damage. Then pull out oil seal and needle bearing by hand.

Remove caulking before taking off locknut.

2) Remove locknut.

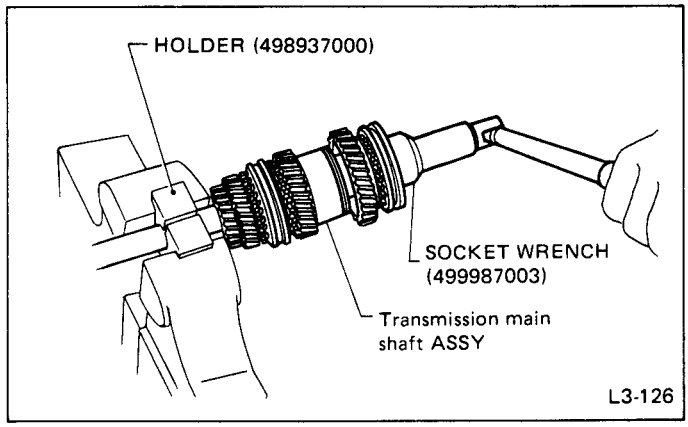

Fig. 92

3) Remove insert stopper plate, sleeve and hub ASSY No. 2, balk ring, 5th drive gear CP, and needle bearing (32 x 36 x 25.7).
4) Using TRANSMISSION MAIN SHAFT REMOVER (899864100), REMOVER (899714110), and a press, remove:

- 5th needle bearing race
- 5th gear thrust washer
- Ball bearing (25.5 x 65 x 31)
- 4th gear thrust washer
- 4th drive gear CP
- Sleeve and hub assembly
- Balk ring
- 4th needle bearing race
- 3rd drive gear CP

ASSEMBLY

1) Assemble sleeve & hub ASSY for 3rd-4th and 5th.

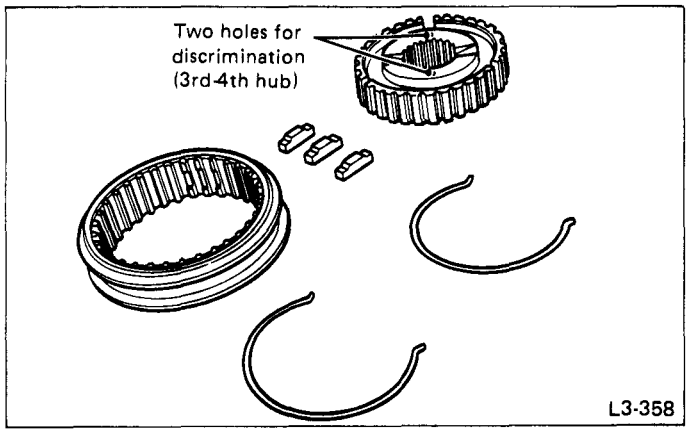

Fig. 93

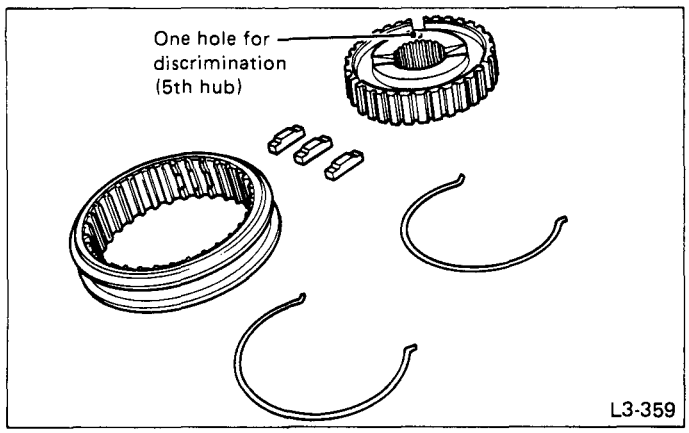

Fig. 94

2) Install 3rd drive gear CP, balk ring, and sleeve & hub ASSY for 3rd-4th needle bearing (32 x 36 x 25.7) on transmission main shaft.

Align groove in balk ring with shifting insert.

3) Install 4th needle bearing race onto transmission main shaft using REMOVER (899714110), INSTALLER (499877000) and a press.

4) Install balk ring, needle bearing (32 x 30 x 25.7), 4th drive gear CP and 4th gear thrust washer to transmission main shaft.

Face thrust washer in the correct direction.

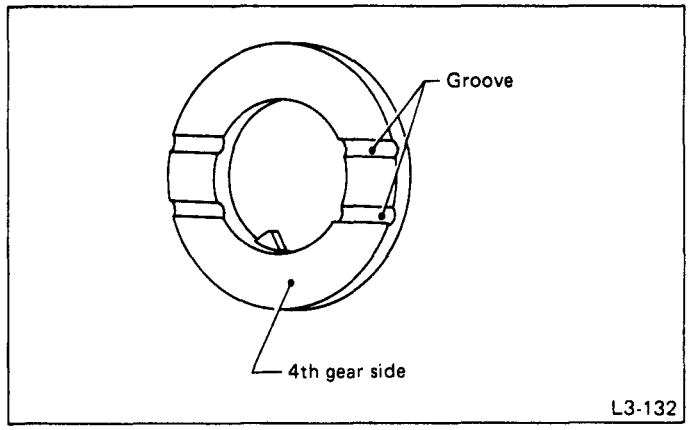

Fig. 95

5) Drive ball bearing onto the rear section of transmission main shaft using REMOVER (899714110), 4TH-5TH RACE INSTALLER (499877000) and a press.

6) Using REMOVER (899714110), 4TH-5TH RACE INSTALLER (499877000) and a press, install the following parts onto the rear section of transmission main shaft.

- 5th gear thrust washer

Face thrust washer in the correct direction.

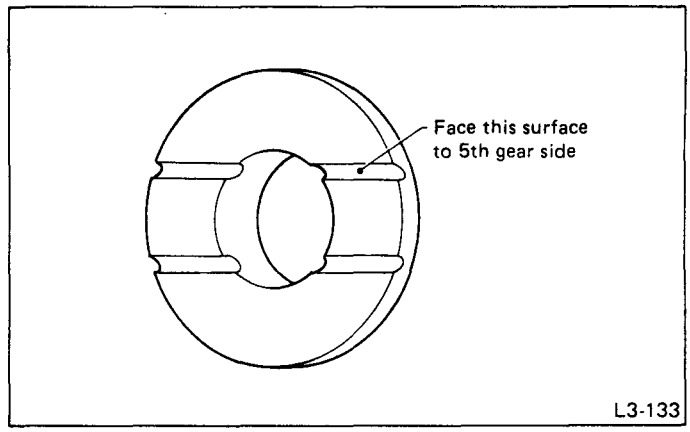

Fig. 96

- 5th needle bearing race

7) Install the following parts to the rear section of transmission main shaft.

- Needle bearing (32 x 36 x 25.7)
- 5th drive gear
- Balk ring
- Sleeve & hub ASSY
- Insert stopper plate
- Lock washer (22 x 38 x 2)
- Tighten lock nuts (22 x 13) to the specified torque using SOCKET WRENCH (499987003) and TRANSMISSION MAIN SHAFT HOLDER (498937000).

Tightening torque:
112 – 124 N·m (11.4 – 12.6 kg-m, 82 – 91 ft-lb)

a. Align groove in balk ring with shifting insert.
b. Be sure to fit pawl of insert stopper plate into 4-mm dia hole in the boss section of synchronizer hub.

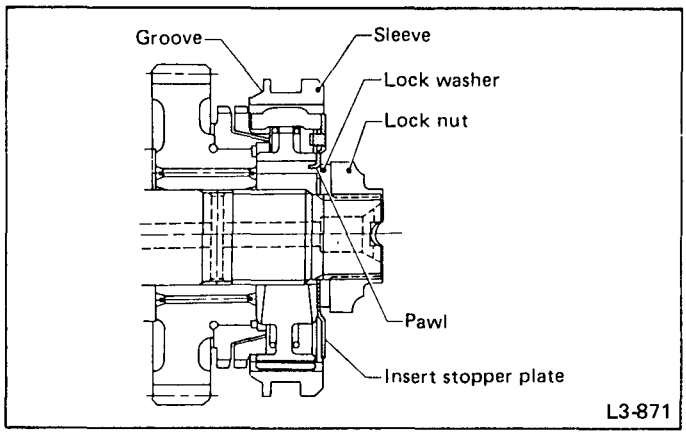

Fig. 97

c. Secure lock nuts in two places after tightening.

[6] Differential ASSY

DISASSEMBLY

1) Remove right and left snap rings from differential, and then remove two axle drive shafts.

During reassembly, reinstall each axle drive shaft in the same place from which it was removed.

2) Loosen twelve bolts and remove hypoid drive gear.
3) Drive out straight pin from differential ASSY toward crown gear.

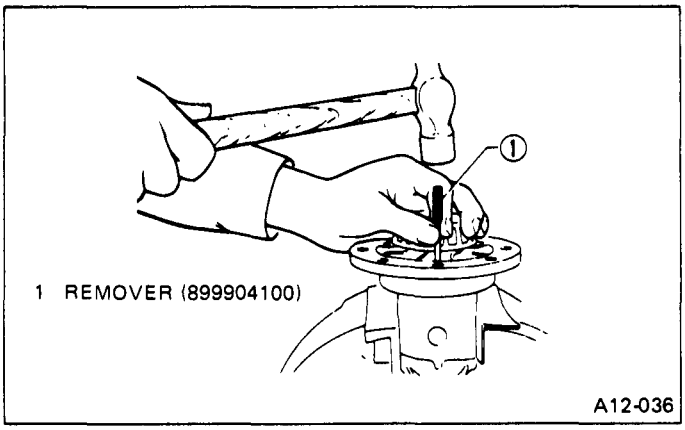

Fig. 98

4) Pull out pinion shaft, and remove differential bevel pinion and gear and washer (38.1 x 50 x t).
5) Remove roller bearing.

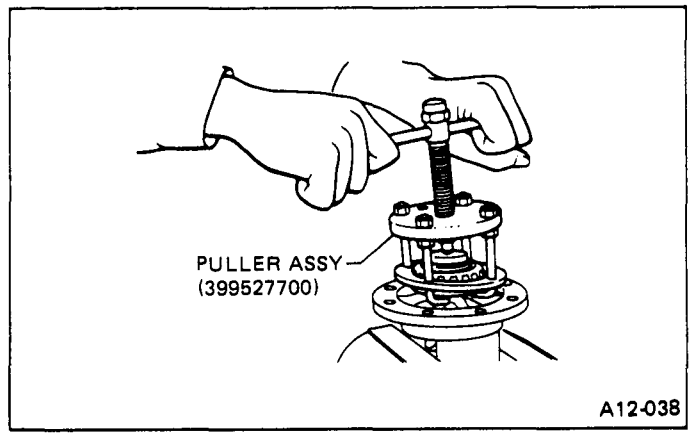

Fig. 99

ASSEMBLY

1) Install bevel gear and bevel pinion together with washers, and insert pinion shaft.

Face the chamfered side of washer toward gear.

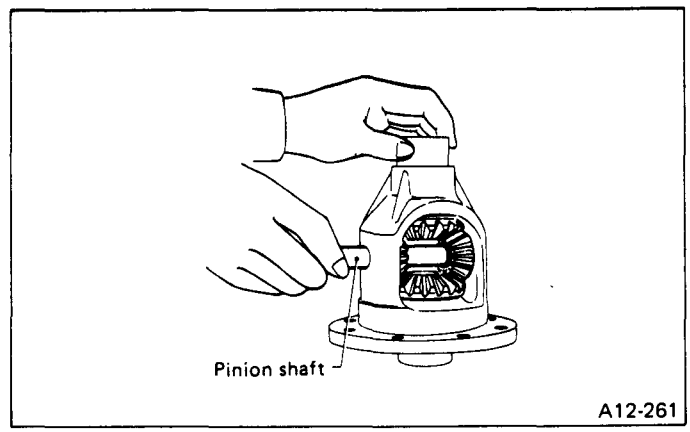

Fig. 100

2) Measure backlash between bevel gear and pinion. If it is not within specifications, install a suitable washer to adjust it.

Standard backlash:
0.13 – 0.18 mm (0.005 – 0.0071 in)

Be sure the pinion gear tooth contacts adjacent gear teeth during measurement.

Washer (38.1 x 50 x t)	
Part No.	Thickness mm (in)
803038021	0.925 – 0.950 (0.0364 – 0.0374)
803038022	0.975 – 1.000 (0.0384 – 0.0394)
803038023	1.025 – 1.050 (0.0404 – 0.0413)

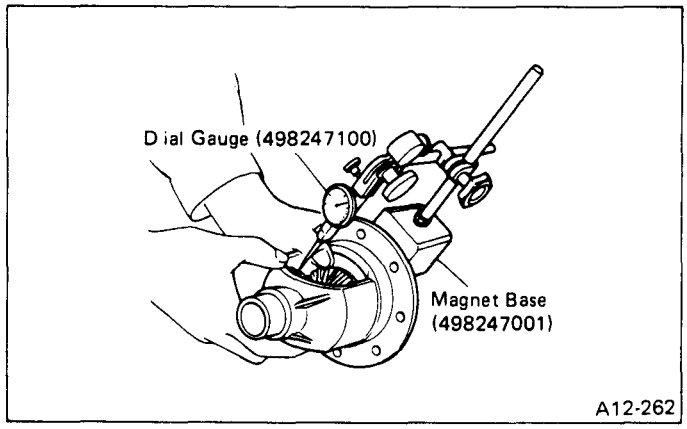

Fig. 101

3) Align pinion shaft and differential case at their holes, and drive straight pin into holes from the crown gear side, using STRAIGHT PIN REMOVER (899904100).

Lock straight pin after installing.

4) Install roller bearing (40 x 80 x 19.75) to differential case.

Be careful because roller bearing outer races are used as a set.

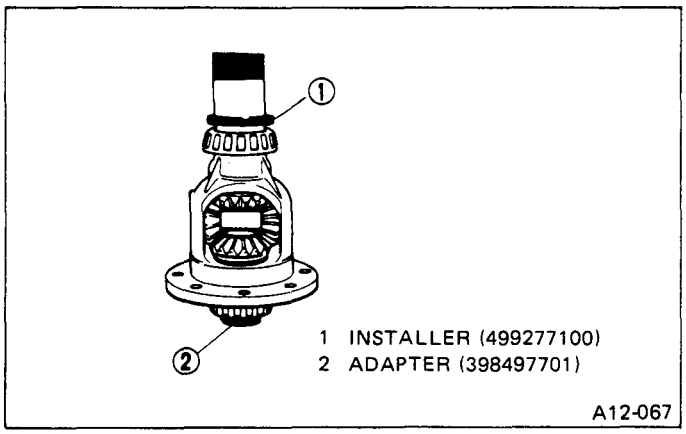

Fig. 102

5) Install crown gear to differential case using twelve bolts.

Tightening torque:
57 – 67 N·m (5.8 – 6.8 kg-m, 42 – 49 ft-lb)

6) Position drive axle shaft in differential case and hold it with outer snap ring (28). Make sure clearance between the shaft and case is within specifications.

Clearance:
0 – 0.2 mm (0 – 0.008 in)

If it is not within specifications, replace snap ring with a suitable one.

Snap Ring (Outer-28)	
Part No.	Thickness mm (in)
805028011	1.05 (0.0413)
805028012	1.20 (0.0472)

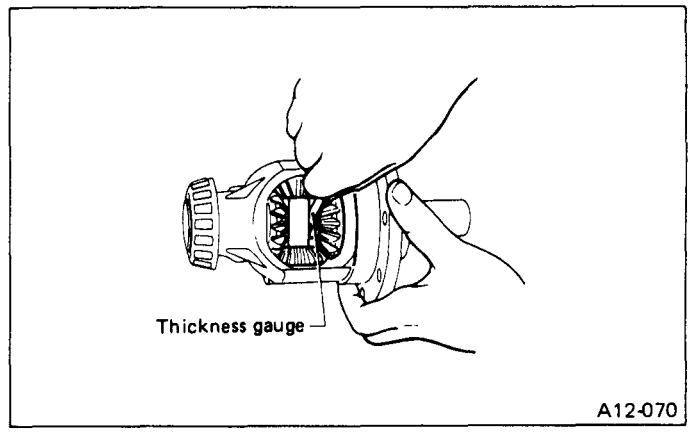

Fig. 103

B Full-Time 4WD

[1] Overall Transmission

DISASSEMBLY

The following job should be followed before disassembly;
- Clean oil, grease, dirt and dust from transmission.
- Remove drain plug to drain oil. After draining, retighten it as before.
- **Replace gasket with a new one.**

Tightening torque:
41 – 47 N·m (4.2 – 4.8 kg-m, 30 – 35 ft-lb)

1) Attach transmission to TRANSMISSION STAND SET (399295120).

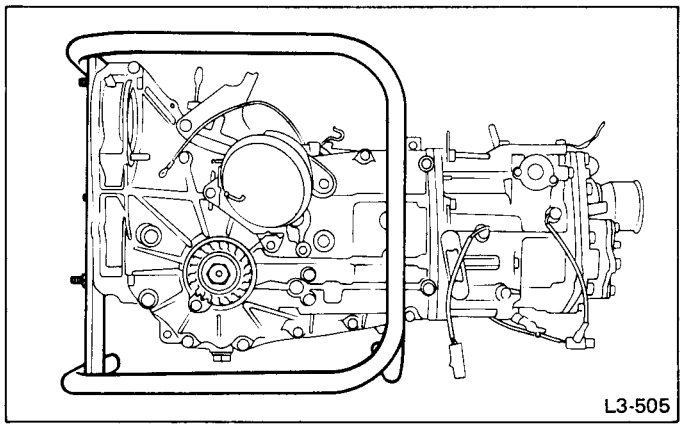

Fig. 104

2) Remove release lever and clutch release bearing.
3) Removing actuator & cable ASSY
   ① Remove snap pin from the transfer shifter rod side and remove clevis pin.

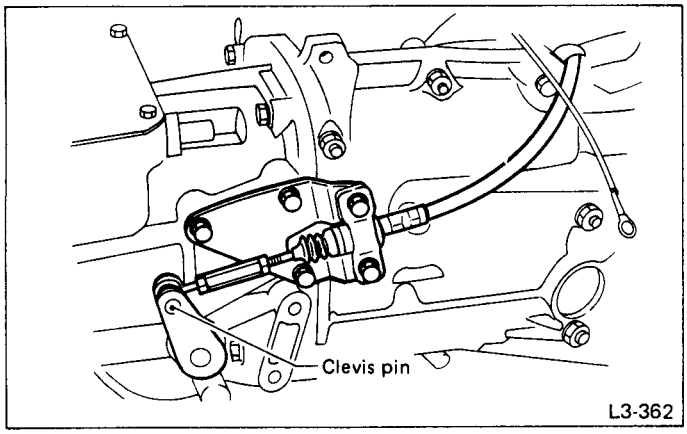

Fig. 105 Cable ASSY

② Remove the three 8 mm bolts and detach the differential lock cable bracket.
③ Remove the three 8 mm bolts from the actuator side and remove actuator & cable ASSY.

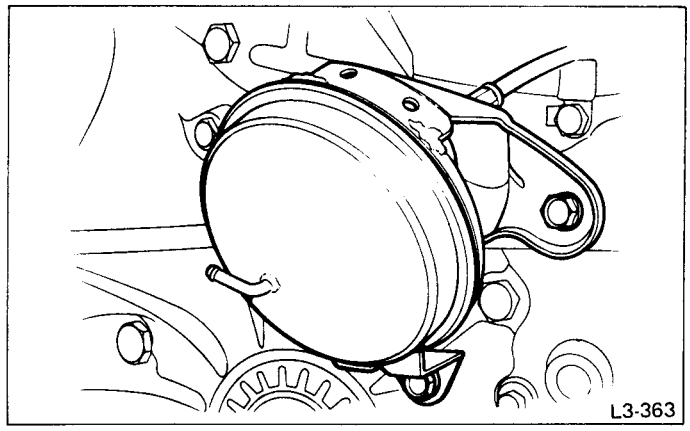

Fig. 106 Actuator ASSY

4) Remove transfer cover.
5) Remove plug from extension and take out spring and ball.
6) Removing rear cover and bracket CP
Remove the five 10-mm bolts from the rear cover.

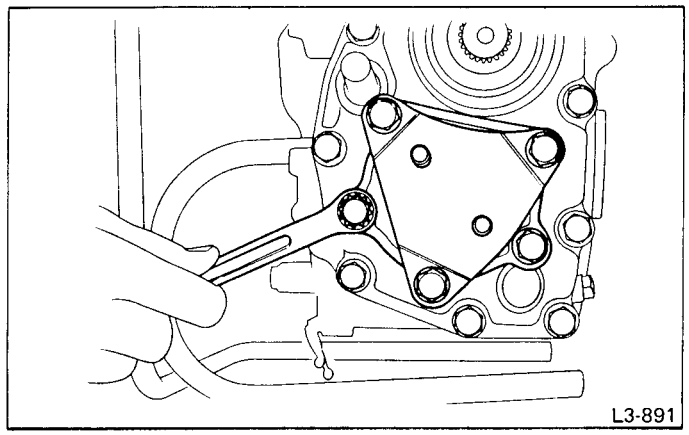

Fig. 107 Removing rear cover

7) Removing extension ASSY
   ① Remove the ten bolts which secure extension ASSY.

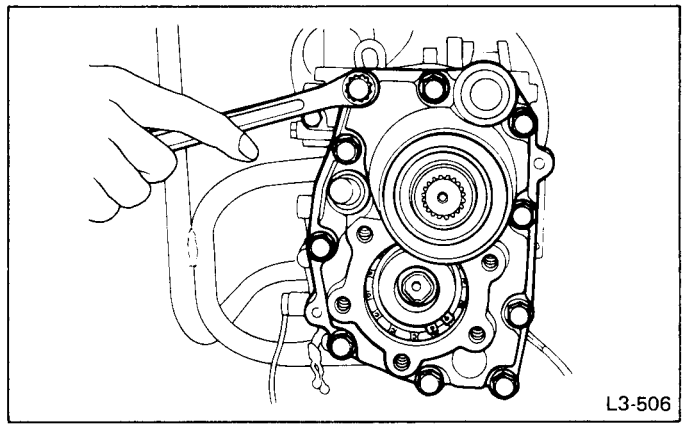

Fig. 108

② Remove center differential & extension ASSY.

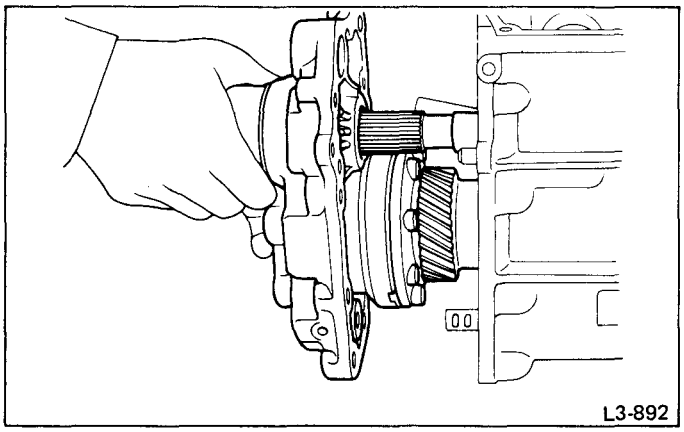

Fig. 109

8) Remove plug with gasket, reverse accent spring and ball.
9) Remove two bolts and loosen reverse check sleeve ASSY.

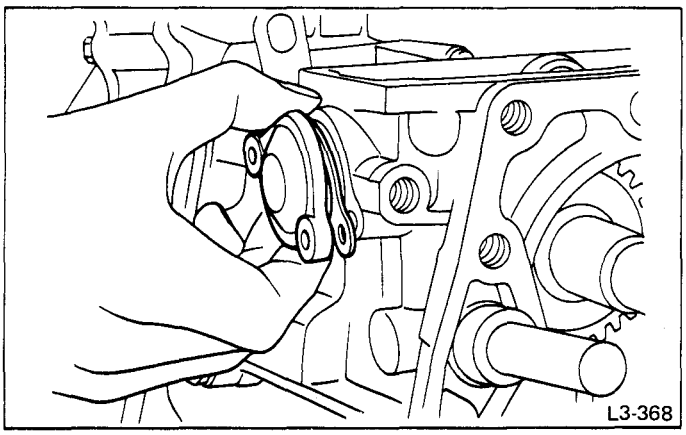

Fig. 110

10) Remove shifter fork screw securing selector arm to shifter arm CP.
11) Remove transfer case and shifter ASSY.
12) Remove bearing mounting bolts.

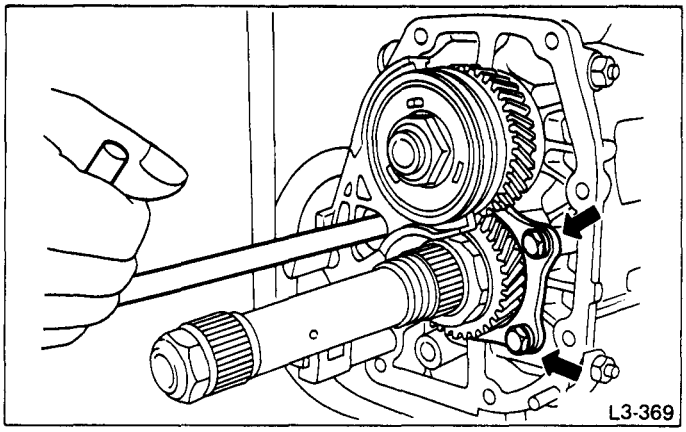

Fig. 111

13) Remove main shaft rear plate.

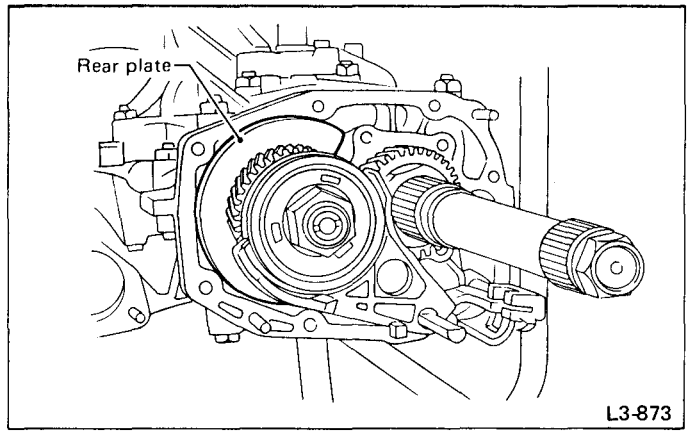

Fig. 112

14) Put vinyl tape around axle drive shafts.
15) Separate transmission case.

Work with nuts facing upward.

16) Remove drive pinion shaft ASSY.

Use a hammer handle, or similar item, remove if too tight.

17) Remove transmission main shaft ASSY.
18) Remove differential ASSY.

a. Be careful not to confuse right and left roller bearing outer races.
b. Be careful not to damage retainer oil seal.

19) Remove 5th shifter fork.
20) Remove three checking ball plugs from main case.

There is a spring and ball inside. Replace gasket with a new one.

21) Remove fork and rod.

When removing rod, keep other rods in neutral. Also, when pulling out spring pin, remove it toward inside of case so that it may not hit against case.

22) Remove reverse idler gear.
23) Remove reverse shifter rod arm and rod.

When pulling arm, be careful not to let ball pop out of arm.

24) Remove reverse shifter lever.
25) Remove differential side retainer.
26) Remove speedometer driven gear.

INSPECTION

See p. 31

ASSEMBLY

Replace gaskets with new ones.

1) Assembling parts in transmission case (LH).
   ① Interlock plunger
   ② Reverse idler gear CP.
   ③ Reverse fork rod and reverse fork rod arm.
   ④ Plug for Rev-5th
   ⑤ Adjustment of reverse idler gear CP. position.

See p. 32

   ⑥ Clearance adjustment

See p. 33

   ⑦ Rod and fork
   ⑧ Plugs for 3-4 and 1-2.

2) Alignment marks/figures on hypoid gear set.

See p. 34

3) Adjustment of drive pinion shim.

See p. 34

4) Install differential ASSY.

a. Wrap the left and right splined sections of axle shaft with vinyl tape to prevent scratches.
b. Be careful not to fold the sealing lip of oil seal.

5) Install transmission main shaft ASSY.

See p. 35

6) Install drive pinion shaft ASSY with selected shims.

Ensure that the knock pin of the case is fitted into the hole in the bearing outer race.

7) Selection of suitable 1st-2nd, 3rd-4th and 5th shifter fork CPs.

1st-2nd shifter fork CP			3rd-4th shifter fork CP			5th shifter fork CP		
Part No.	No.	Remarks	Part No.	No.	Remarks	Part No.	No.	Remarks
32804AA031	1	Moves 0.2 mm (0.008 in) closer to 1st gear	32810AA080	1	Moves 0.2 mm (0.008 in) closer to 4th gear	32812AA060	1	Moves 0.2 mm (0.008 in) closer to 5th gear
32804AA041	–	Positions in the center	32810AA070	–	Positions in the center	32812AA070	–	Positions in the center
32804AA051	3	Moves 0.2 mm (0.008 in) closer to 2nd gear	32810AA100	3	Moves 0.2 mm (0.008 in) closer to 3rd gear	32812AA100	3	Moves 0.2 mm (0.008 in) closer to 5th gear

8) Inspect rod end clearance.

See p. 36

9) Apply liquid gasket and put cases (RH/LH) together.
10) Tighten 17 bolts to the tightening torque in the following sequence.

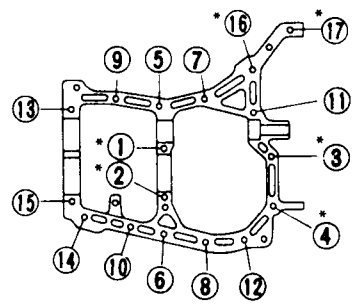

* 10 mm bolt

A12-369

Fig. 113

Tightening torque:
8 mm bolt
23 – 26 N·m (2.3 – 2.7 kg-m, 17 – 20 ft-lb)
10 mm bolt
36 – 42 N·m (3.7 – 4.3 kg-m, 27 – 31 ft-lb)

a. Insert bolts from the bottom and tighten nuts at the top.
b. Put cases together so that drive pinion shim and input shaft holder shim are not caught up in between.
c. Confirm that counter gear and speedometer gear are meshed, and high-low shifter shaft is inserted perfectly.

11) Tighten ball bearing attaching bolts at the drive pinion rear.
12) Backlash adjustment of hypoid gear and preload adjustment of roller bearing.

a. Use new special tool "STOPPER (498427000)".

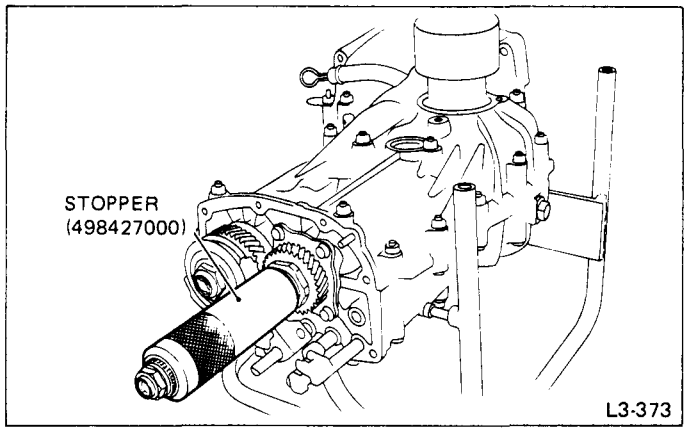

Fig. 114

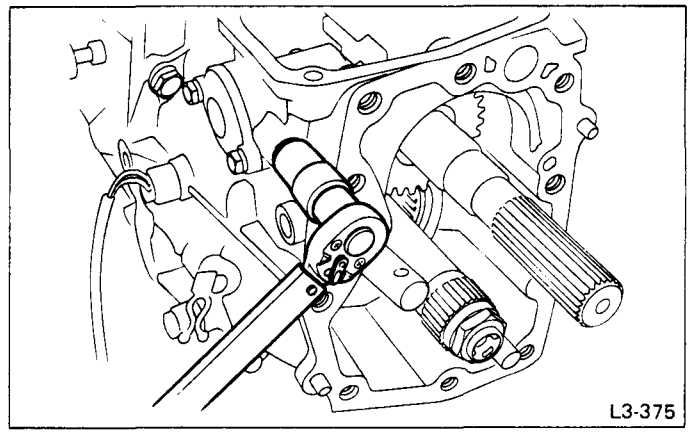

Fig. 116

b. See p. 37

13) Checking tooth contact of hypoid gear.

See p. 37

14) Fit O-ring into the groove of retainer and tighten it into the position where retainer has been tightened.

Carry out this job on both upper and lower retainers.

15) Selection of main shaft rear plate.

See p. 38

16) Install transfer case & shifter ASSY to transmission case.

While aligning differential lock sleeve, install transfer case.

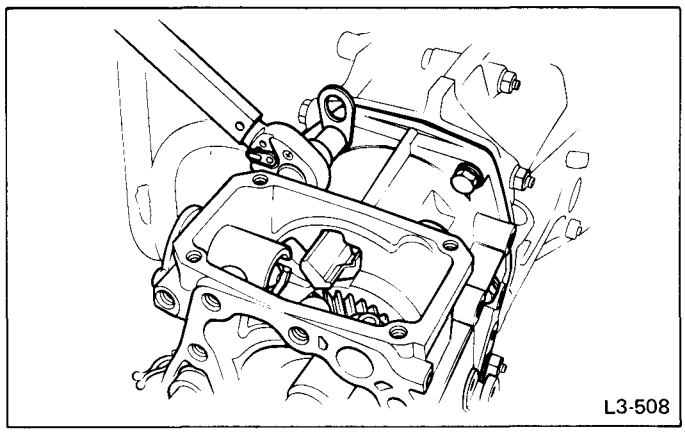

Fig. 115

17) Tighten selector arm.
18) Install in following order ball, reverse accent spring, aluminum gasket and plug.

19) Neutral position adjustment.

See p. 39

20) Reverse check plate adjustment.

See p. 40

21) Installing center differential & extension ASSY.
① Install transfer shifter rod on extension with a clip.
② Install center differential & extension on transfer case.

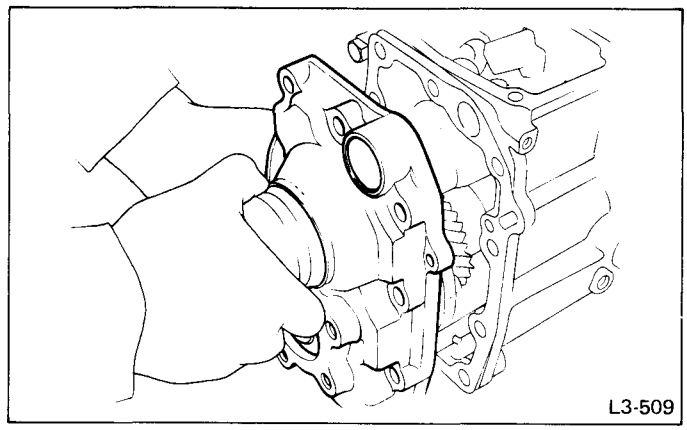

Fig. 117

③ Tightening the extension
Tighten the ten 10-mm bolts to secure extension.

Tightening torque:
37 ± 3 N·m (3.8 ± 0.3 kg-m, 27.5 ± 2.2 ft-lb)

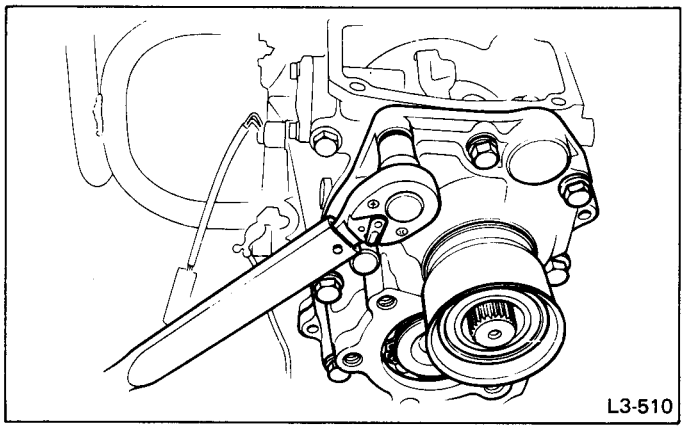

Fig. 118

④ Install ball, spring and gasket in extension and tighten plug.

Tightening torque:
19.6 ± 1.5 N·m (2.0 ± 0.15 kg-m, 14.5 ± 1.1 ft-lb)

22) Installing extension cover and shifter bracket
Secure cover and shifter bracket to extension with the five bolts.

Tightening torque:
33 ± 3 N·m (3.4 ± 0.3 kg-m, 24.6 ± 2.2 ft-lb)

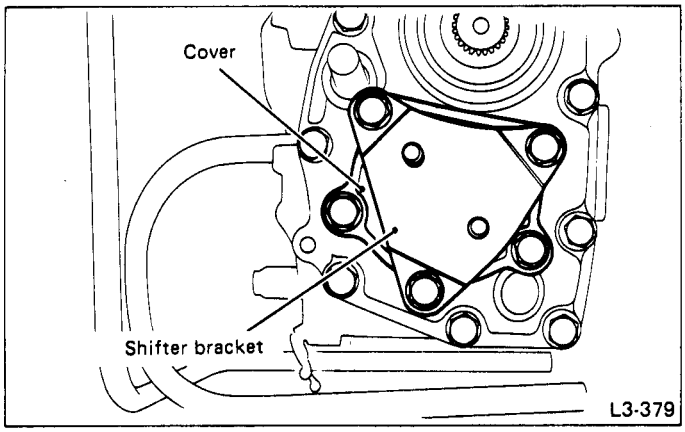

Fig. 119

23) Install transfer cover with gasket and tighten bolts.
24) Installing differential lock bracket
Tighten with the three bolts.

Tightening torque:
15.7 ± 1.5 N·m (1.6 ± 0.15 kg-m, 11.6 ± 1.1 ft-lb)

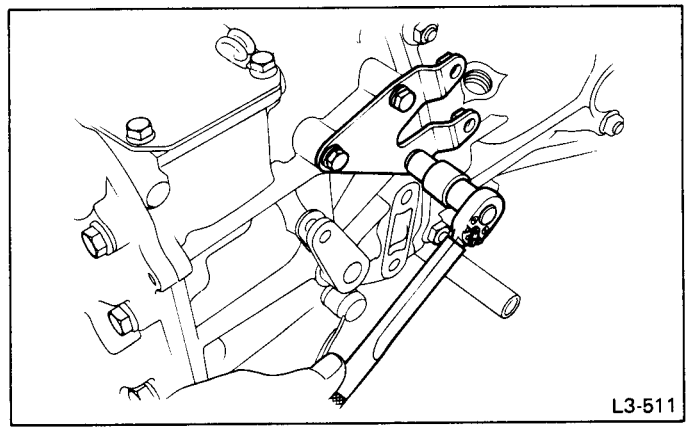

Fig. 120

25) Installing actuator & cable ASSY
Install on the case (left) with the three bolts. Also install cable plate with the two bolts.

Tightening torque:
15.7 ± 1.5 N·m (1.6 ± 0.15 kg-m, 11.6 ± 1.1 ft-lb)

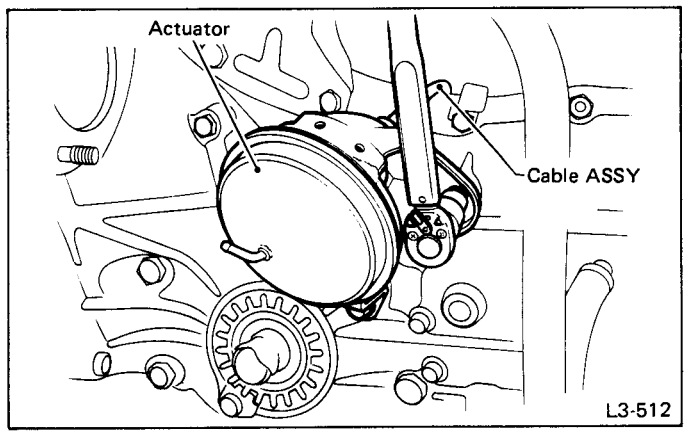

Fig. 121

26) Adjusting cable length
① Move differential lock lever to the center differential lock side while turning main shaft.

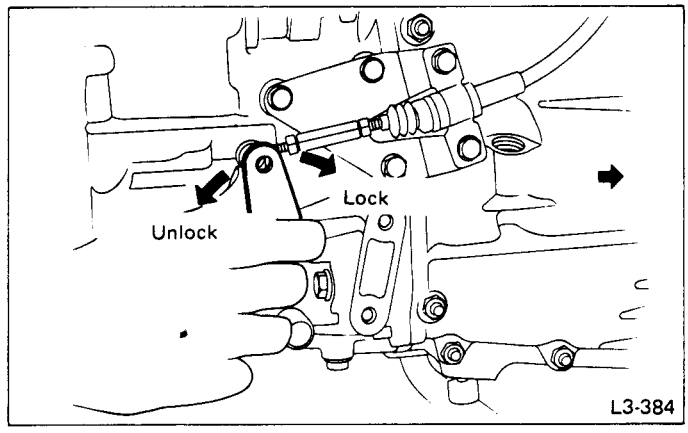

Fig. 122

② Connect a hose to the pipe outside the actuator. Apply vacuum (using Mighty Bag, etc.) through the hose to pull the cable forward.

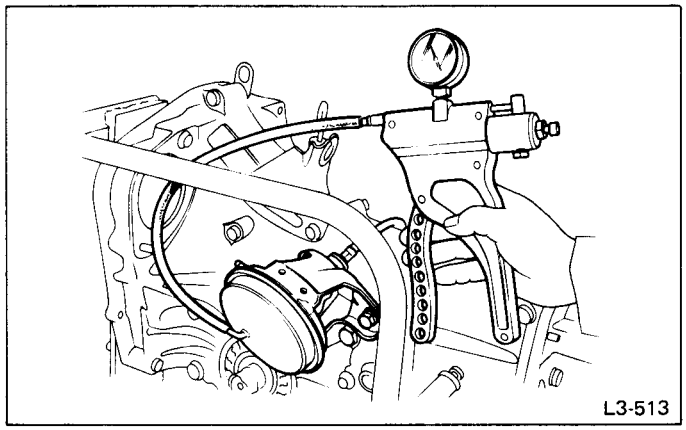

Fig. 123

③ Align the bore in differential lock lever with the hole at the end of cable using a turnbuckle, and secure with an 8-mm clevis pin and snap pin.
④ Turn the turnbuckle 180° in the compression direction and tighten the two lock nuts to the specified torque.

Tightening torque:
5 N·m (0.5 kg-m, 3.6 ft-lb)

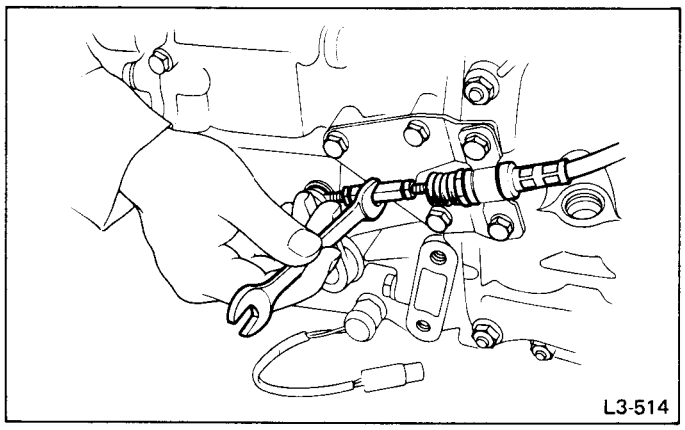

Fig. 124

27) Checking operation of transfer shifter rod
Apply vacuum –26.7 to –33.3 kPa (–200 to –250 mmHg, –7.87 to –9.84 inHg) through pipes located on the inside and outside of the actuator to check that transfer shifter rod moves smoothly from the differential lock position to the differential unlock position, and vice versa.

If transfer shifter rod does not move properly, check condition of rod, lever, bracket, transfer sleeve and gears. Repair or replace faulty parts.

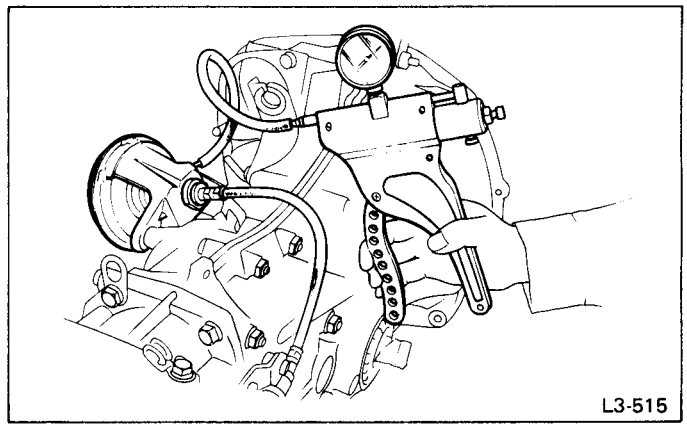

Fig. 125

28) Install release lever.

[2] Center Differential & Extension ASSY

DISASSEMBLY

1) Remove snap ring (Outer-50) from center differential bearing.
2) Press out center differential ASSY.

Do not reuse ball bearing.

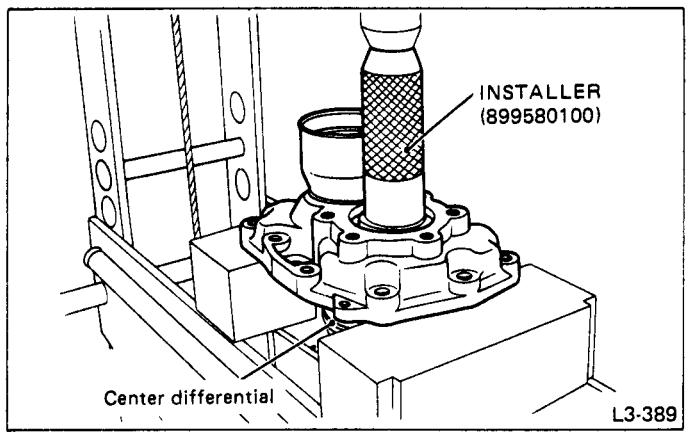

Fig. 126

3) Remove snap ring (Inner-80) and remove ball bearing (50 x 80 x 10).

Do not reuse ball bearing.

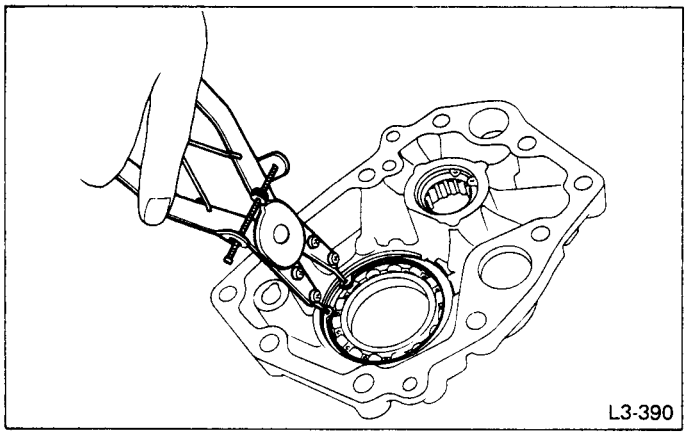

Fig. 127

4) Disassembling center differential
   ① Remove the eight socket bolts (8 x 16 x 12).
   ② Separate transfer drive gear and differential case. Remove the shaft, two pinions, bevel gear, washer, and needle bearings (41 x 46 x 13; 2 sets of two halves).

Note the locations of both sets of needle bearings so that they can be reassembled in their original positions.

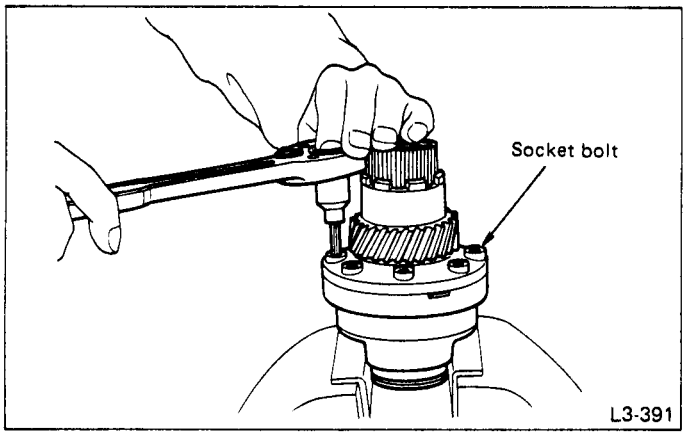

Fig. 128

ASSEMBLY

1) Attach ball bearing (50 x 80 x 10) to extension and install snap ring (Inner-80).
Select a suitable snap ring so that side clearance between snap ring and ball bearing is 0 to 0.2 mm (0 to 0.008 in).

Snap Ring (Inner-80)	
Part No.	Thickness mm (in)
805180020	1.75 ± 0.03 (0.0689 ± 0.0012)
805180030	1.90 ± 0.03 (0.0748 ± 0.0012)
805180040	2.05 ± 0.03 (0.0807 ± 0.0012)

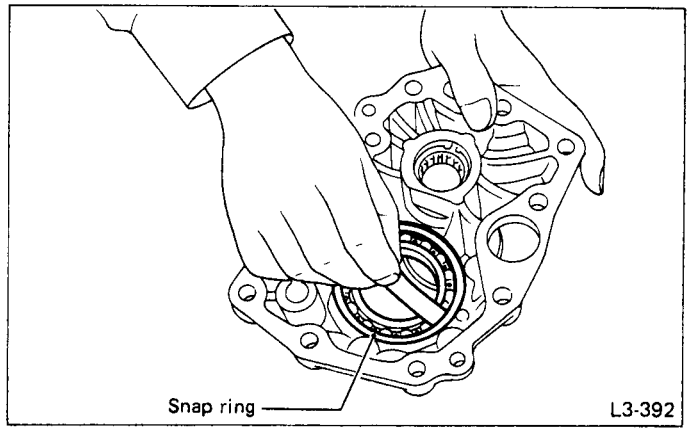

Fig. 129

2) Installing center differential ASSY
   ① Position differential bevel washer and bevel gear in center differential case.
   ② Attach differential bevel pinion to center differential pinion shaft and insert the assembled unit into the case.

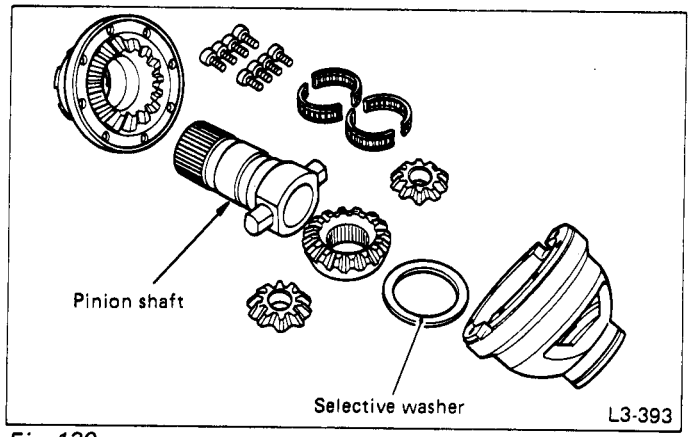

Fig. 130

   ③ Attach the two needle bearing halves (41 x 46 x 13) to the groove in pinion shaft. Install transfer drive gear and tighten with the eight socket bolts (8 x 16 x 12).

Tightening torque:
25 ± 2 N·m (2.5 ± 0.2 kg-m, 18.1 ± 1.4 ft-lb)

Always replace needle bearing halves in their original positions.

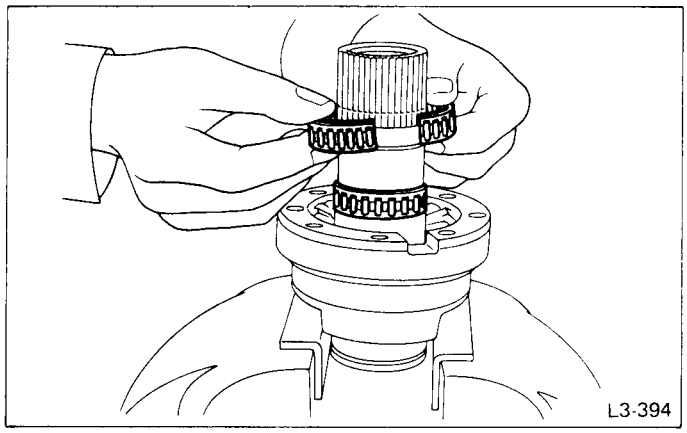

Fig. 131

④ Backlash adjustment

Set up a dial gauge as shown in Figure below. Select a differential bevel washer so that pinion shaft can move 0.40 to 0.60 mm (0.0157 to 0.0236 in) in the axial direction.

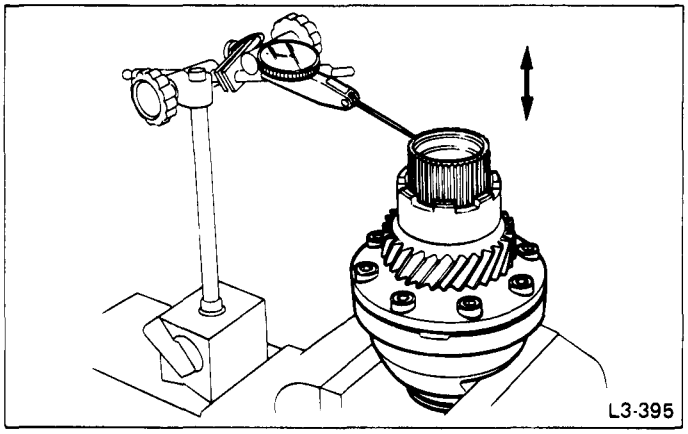

Fig. 132

Differential Bevel Washer	
Part No.	Thickness mm (in)
38960AA000	1.0 ± 0.05 (0.0394 ± 0.0020)
38960AA100	1.2 ± 0.05 (0.0472 ± 0.0020)
38960AA200	1.4 ± 0.05 (0.0551 ± 0.0020)
38960AA300	1.6 ± 0.05 (0.0630 ± 0.0020)
38960AA400	1.8 ± 0.05 (0.0709 ± 0.0020)
38960AA500	2.0 ± 0.05 (0.0787 ± 0.0020)

3) Using INSTALLER, press center differential into place.

Tool No.	Tool name
922340000	INSTALLER

Support socket bolt location with a press.

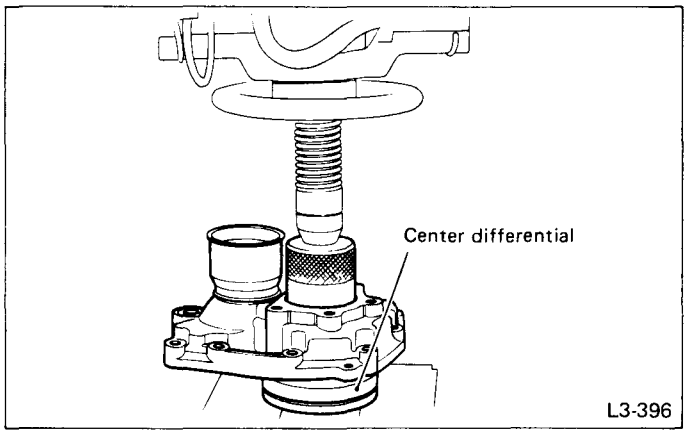

Fig. 133

4) Installing snap ring (Outer-50)

Select a snap ring so that side clearance between snap ring and ball bearing is 0 to 0.2 mm (00 to 0.008 in).

Snap Ring (Outer-50)	
Part No.	Thickness mm (in)
805050030	2.00 ± 0.03 (0.0787 ± 0.0012)
805050040	2.15 ± 0.03 (0.0846 ± 0.0012)
805050050	2.30 ± 0.03 (0.0906 ± 0.0012)

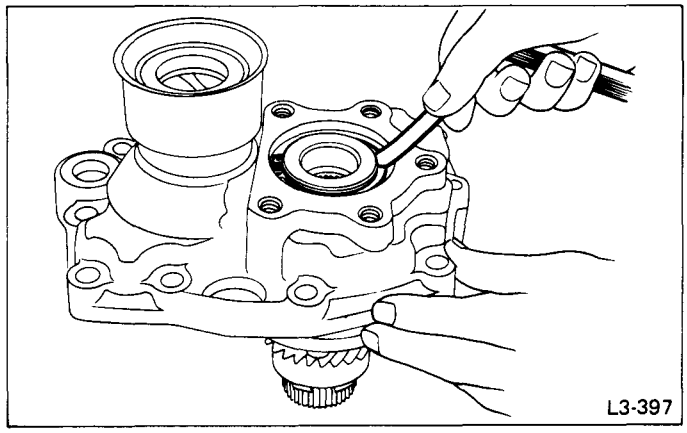

Fig. 134

[3] Transfer Case & Shifter ASSY

DISASSEMBLY

1) Pull out shifter arm CP., selector arm, and reverse check sleeve ASSY from transfer case.
2) Remove oil guide from transfer case.

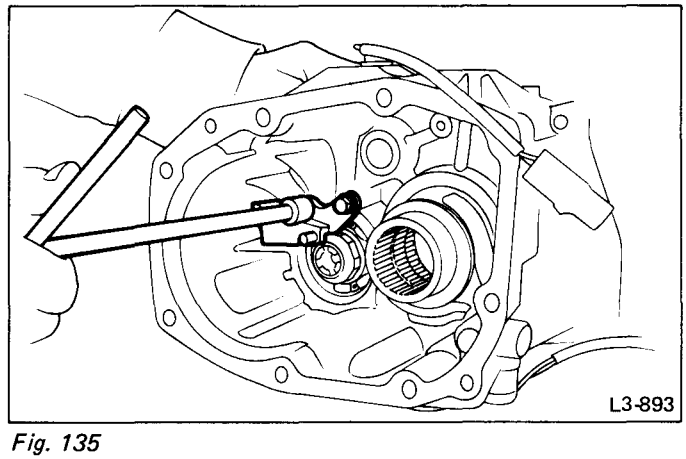

Fig. 135

3) Remove ① back-up light switch, ② neutral switch and ③ differential lock pilot switch.

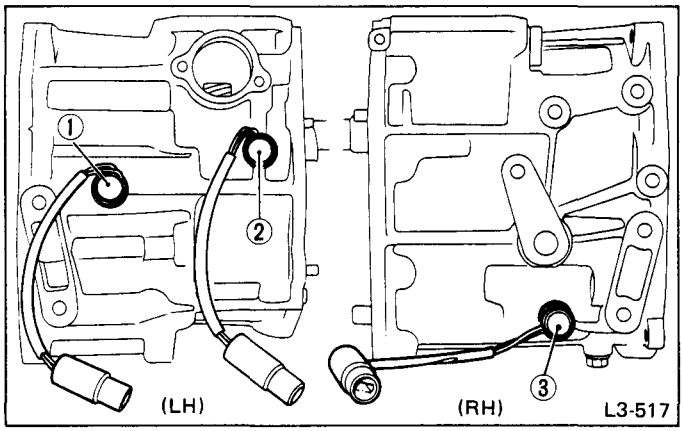

Fig. 136

4) Using REMOVER 2, drive out straight pin (5 mm dia. x 25). Remove differential lock lever ASSY.

Tool No.	Tool name
398791600	REMOVER 2

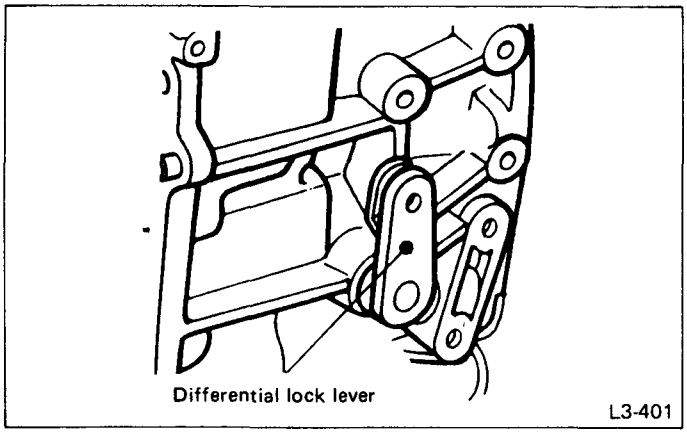

Fig. 137

5) Using REMOVER 2, drive out straight pin (5 mm dia. x 25) through the hole for differential lock switch. Remove fork, differential lock shaft and lock sleeve.

Tool No.	Tool name
398791600	REMOVER 2

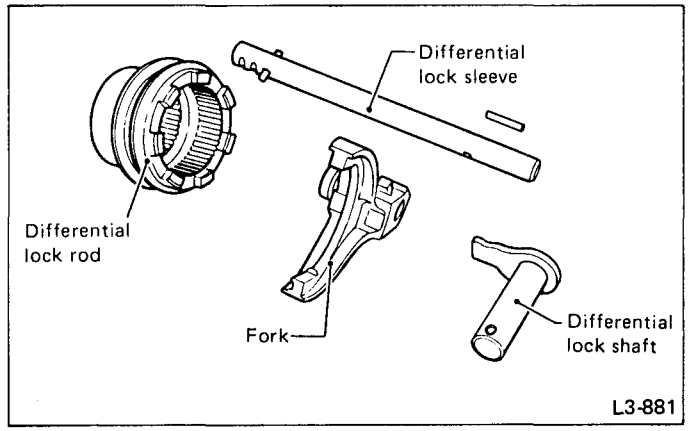

Fig. 138

6) Place splined end of transfer driven gear in a vise. Unlock lock plates and remove lock nuts (30 x 12).

a. Use soft vise jaws (such as aluminum plates, etc.) when placing driven gear in vise.
b. Use a hex. socket wrench whose width across flats is 30 mm.

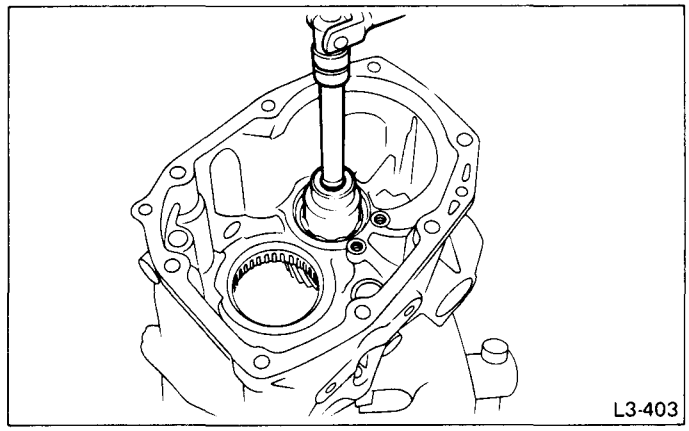

Fig. 139

7) Press out transfer driven gear.

Tool No.	Tool name
899580100	REMOVER

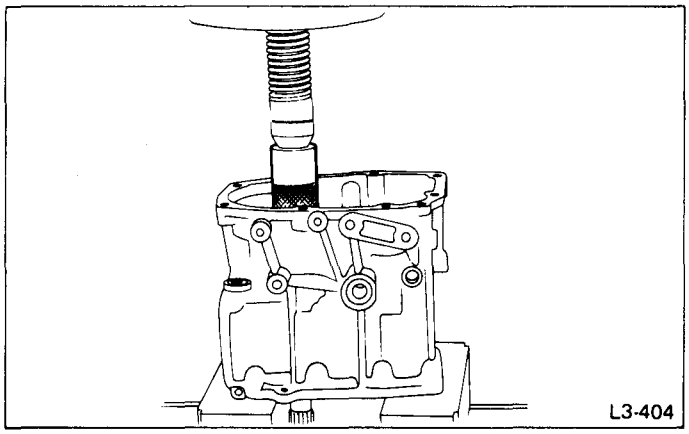

Fig. 140

8) Remove snap ring (Inner-56) and press out ball bearing (22 x 56 x 16).

Tool No.	Tool name
899754112	PRESS

Do not reuse ball bearing.

9) Remove snap ring (Inner-72). Remove needle bearing (58 x 72 x 16) using INSTALLER and a press.

Tool No.	Tool name
398663600	SNAP RING PLIERS
499755502	INSTALLER

ASSEMBLY

1) Press needle bearing (58 x 72 x 16) into the bore in transfer case and secure with snap ring (Inner-72).

Tool No.	Tool name
498175400	INSTALLER
499755502	INSTALLER

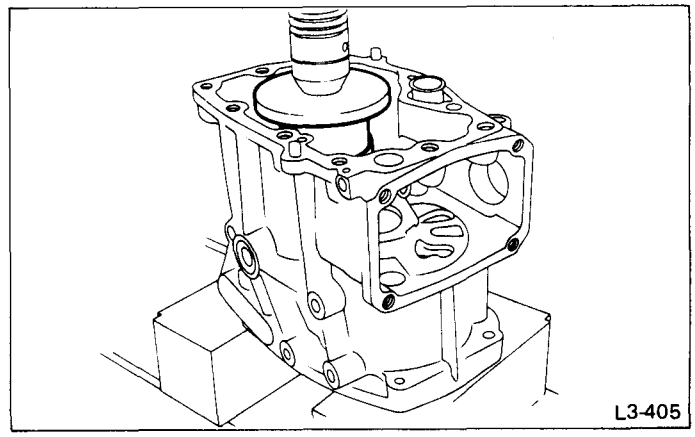

Fig. 141

2) Install ball bearing (22 x 56 x 16) using a press and INSTALLER and install snap ring (Inner-56).

Tool No.	Tool name
899874100	INSTALLER

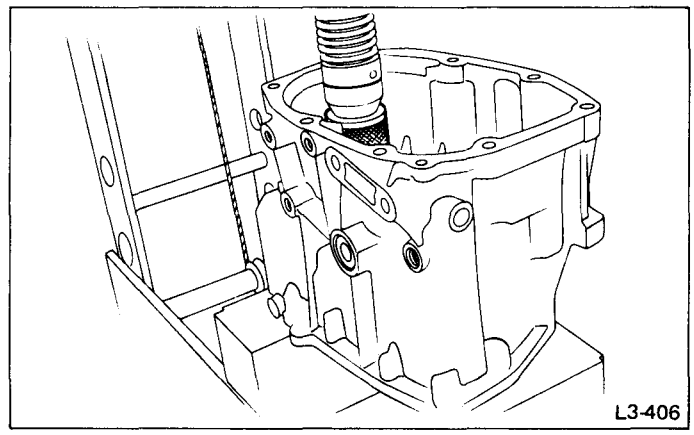

Fig. 142

3) Select a snap ring so that side clearance between snap ring (Inner-56) and ball bearing is 0 to 0.1 mm (0 to 0.004 in).

Snap Ring (Inner-56)	
Part No.	Thickness mm (in)
805156020	1.75 ± 0.015 (0.0689 ± 0.0006)
805156021	1.83 ± 0.015 (0.0720 ± 0.0006)
805156022	1.91 ± 0.015 (0.0752 ± 0.0006)

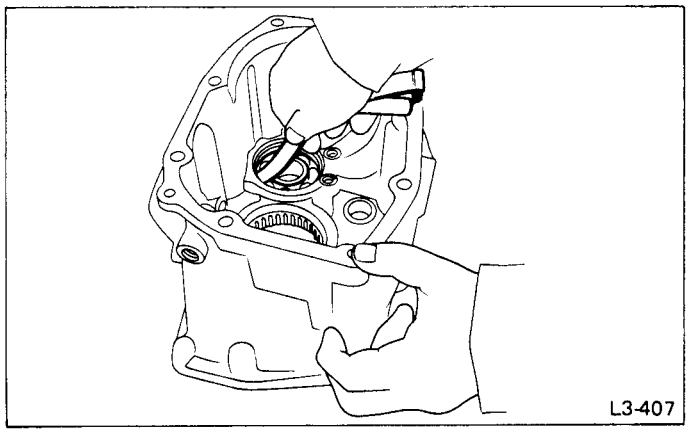

Fig. 143

4) Install transfer driven gear using PRESS and INSTALLER.

Tool No.	Tool name
899580100	INSTALLER
899754112	PRESS

Be careful because press support is unstable.

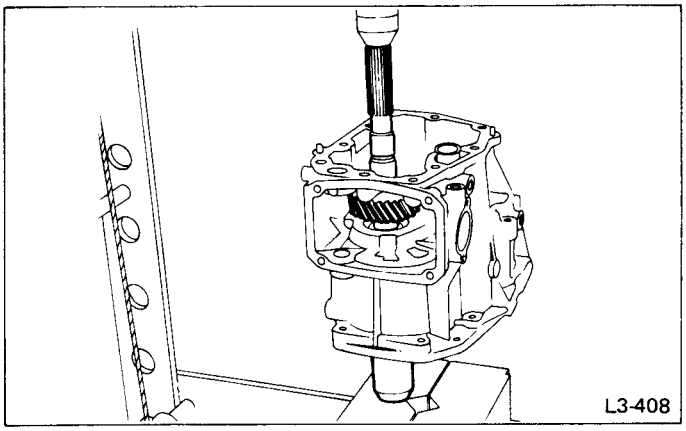

Fig. 144

5) Install lock washer (20 x 30 x 3). Place splined end of transfer driven gear in a vise and tighten lock nut (30 x 12) to the specified torque. Lock lock nut at four points.

Tightening torque:
78 ± 6 N·m (8 ± 0.6 kg-m, 57.9 ± 4.3 ft-lb)

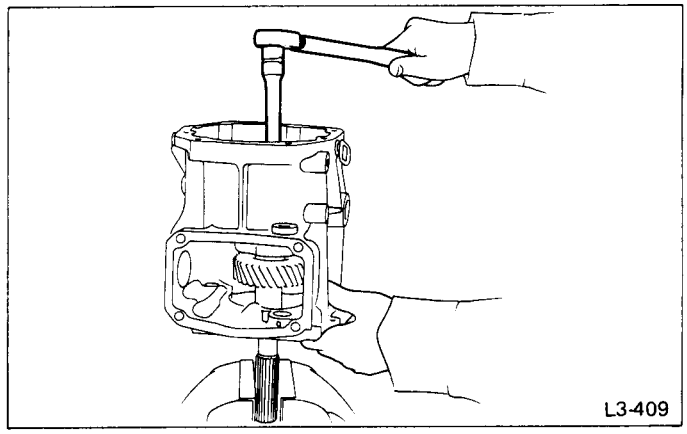

Fig. 145

6) Install differential lock shaft, lock sleeve, fork and rod in that order. Drive straight pin (5 mm dia. x 25) into place through the hole for differential lock switch using REMOVER 2.

Tool No.	Tool name
398791600	REMOVER 2

a. Note the direction of the check ball groove in the rod.
b. Face dog clutch of differential lock sleeve toward the rear.

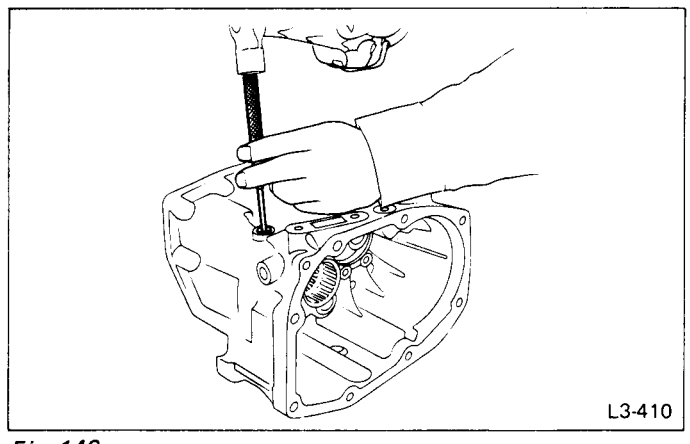

Fig. 146

7) Install differential lock lever. Drive straight pin (5 mm dia. x 28) into place using REMOVER 2.

Tool No.	Tool name
398791600	REMOVER 2

8) Install ③ differential lock pilot switch, ② neutral switch and ① back-up light switch.

Tightening torque:
25 ± 2 N·m (2.5 ± 0.2 kg-m, 18.1 ± 1.4 ft-lb)

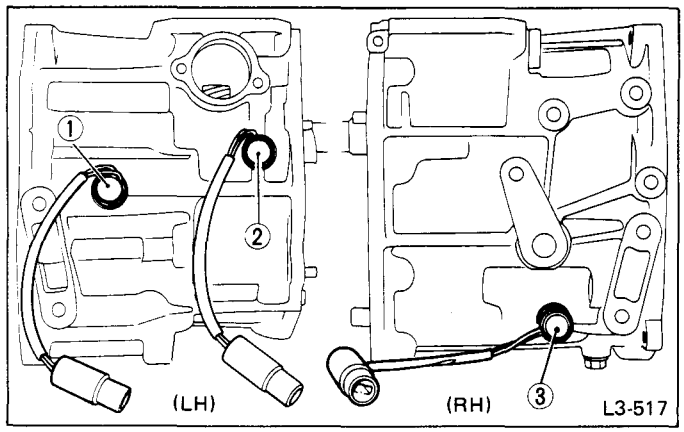

Fig. 147

Harness color ① RY (two harnesses)
② LgY and B
③ RY (two harnesses)

9) Position reverse check sleeve ASSY in the case.
10) Position shifter arm in the case and install selector arm.

Apply gear oil to shifter arm. Check that oil seal (18 x 28 x 7) engages properly.

11) Install transfer oil guide.

Tightening torque:
10 N·m (1 kg-m, 7 ft-lb)

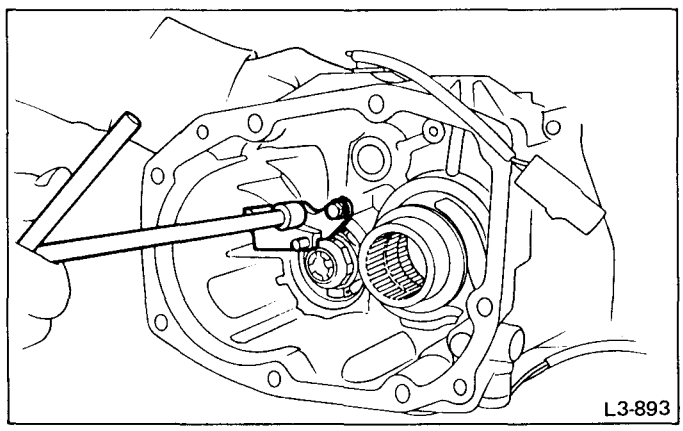

Fig. 148

[4] Drive Pinion Shaft ASSY

DISASSEMBLY

1) Drive pinion ASSY
(1) Straighten lock nut at staked portion. Remove the lock nut using HOLDER and STOPPER.

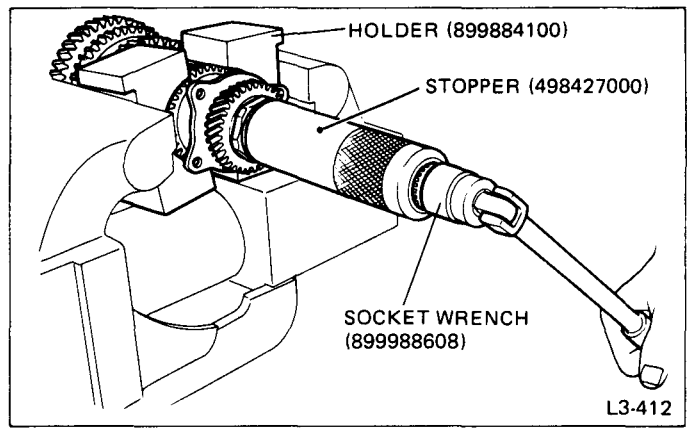

Fig. 149

(2) Withdraw drive pinion from driven shaft ASSY. Remove differential bevel gear sleeve ①, drive pinion spacer ②, two washers ③ (25 x 37.5 x 4), thrust bearing ④ (25 x 37.5 x 3), needle bearing ⑤ (25 x 30 x 20), drive pinion collar ⑥, needle bearing ⑦ (30 x 37 x 23) and thrust bearing ⑧ (33 x 50 x 3).

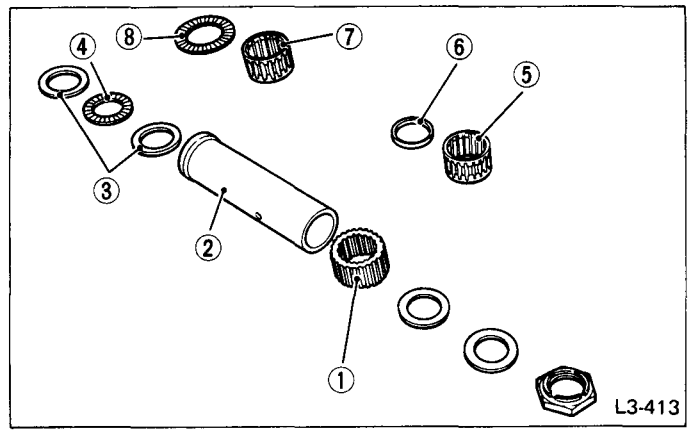

Fig. 150

(3) Remove roller bearing and washer (33 x 50 x 5) using REMOVER and PRESS.

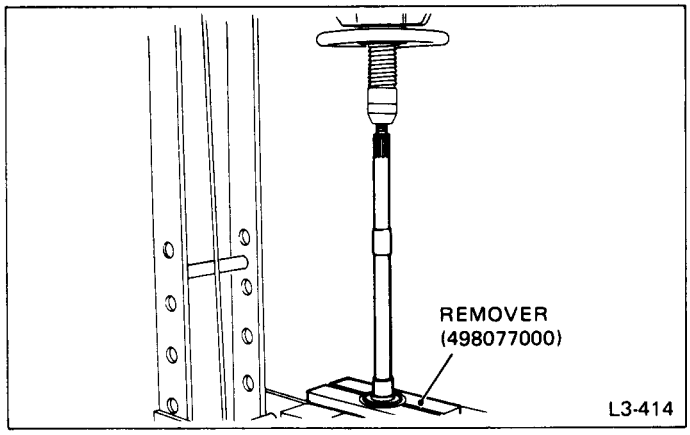

Fig. 151

2) Driven gear ASSY

Attach a cloth to the end of driven shaft (on the frictional side of thrust needle bearing) during disassembly or reassembly to prevent damage.

(1) Straighten lock nut at staked portion. Remove the lock nut using SOCKET WRENCH 50 and HOLDER.

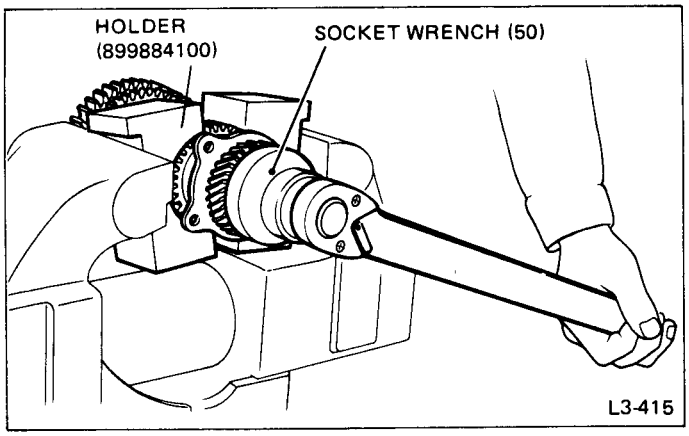

Fig. 152

(2) Remove 5th driven gear using REMOVER.

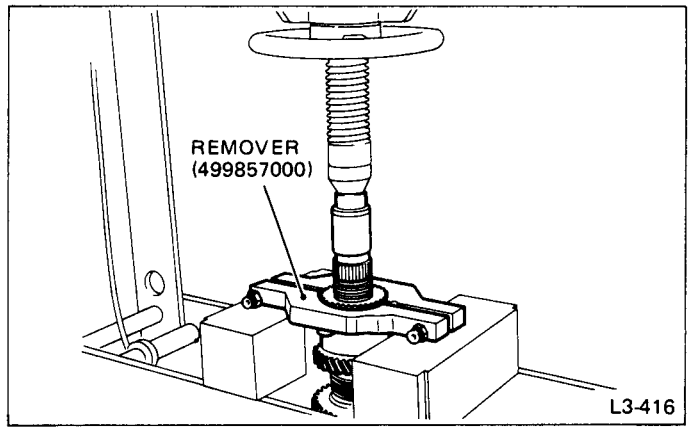

Fig. 153

(3) Remove woodruff key.
(4) Remove roller bearing (42 x 74 x 40) and 3rd & 4th driven gear using REMOVER.

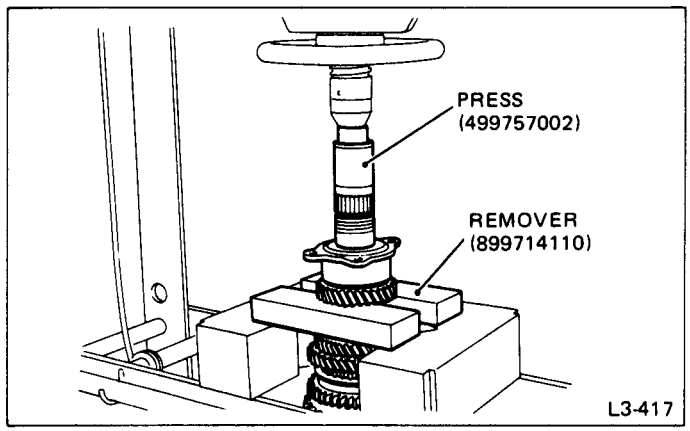

Fig. 154

(5) Remove the key.
(6) Remove 2nd driven gear ASSY.
(7) Remove 1st driven gear, 2nd gear bushing, gear and hub using REMOVER and PRESS.

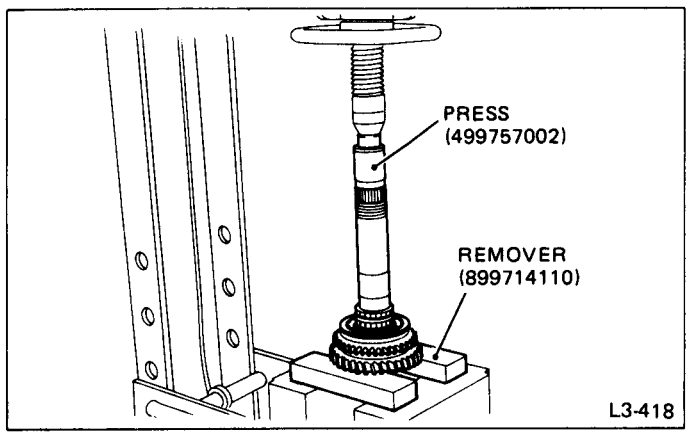

Fig. 155

ASSEMBLY

1) Assemble gear & hub ASSY.

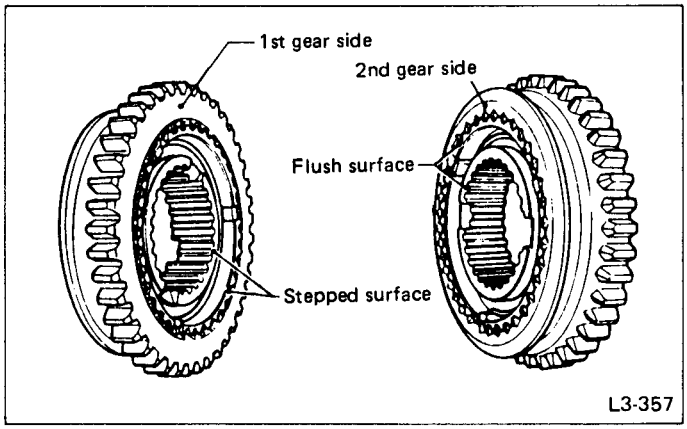

Fig. 156

Position open ends of springs 120° apart.

2) Driven shaft ASSY
(1) Install 1st driven gear, 1st-2nd baulk ring and gear & hub ASSY onto driven shaft.
(2) Install 2nd driven gear bushing onto driven shaft using INSTALLER and PRESS.

Attach a cloth to the end of driven shaft to prevent damage.

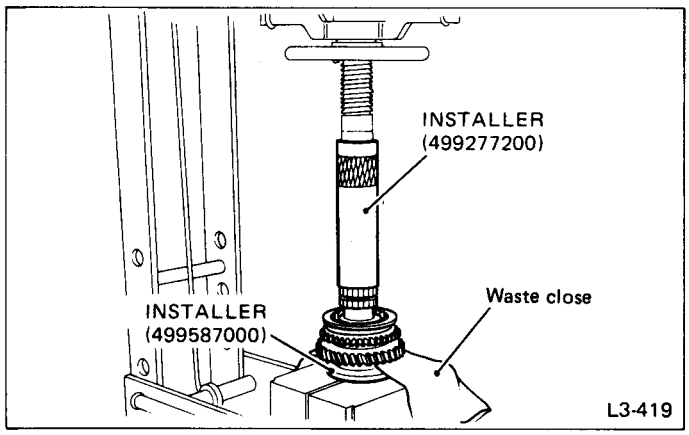

Fig. 157

(3) Install 2nd driven gear, 1st-2nd baulk ring and insert onto driven shaft. After installing key on driven shaft, install 3rd-4th driven gear using INSTALLER and PRESS.

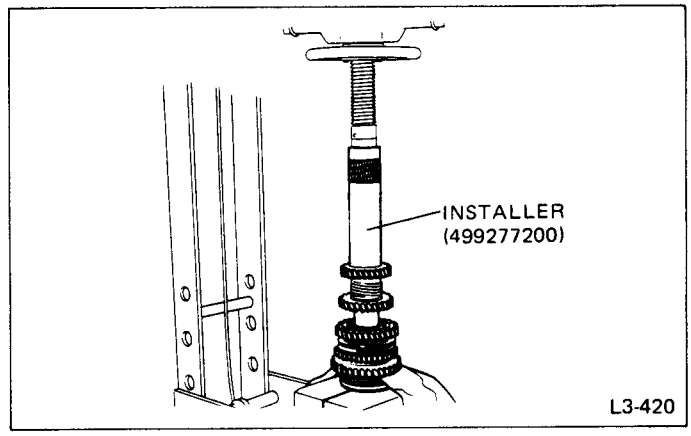

Fig. 158

(4) Install a set of roller bearing (42 x 74 x 40) onto the driven shaft using INSTALLER and PRESS.

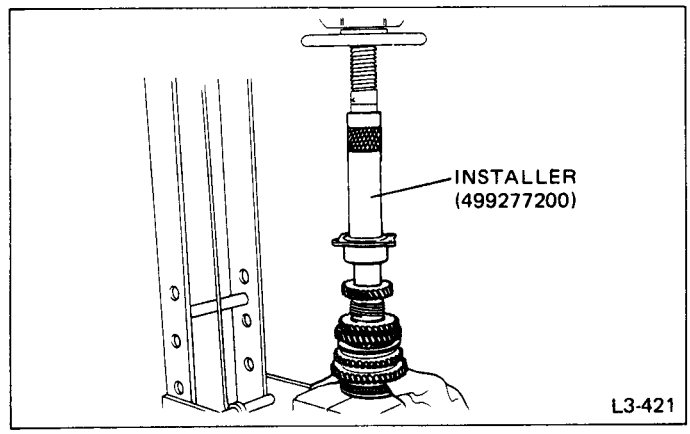

Fig. 159

(5) Position woodruff key in groove on the rear of driven shaft. Install 5th driven gear onto drive shaft using INSTALLER and PRESS.

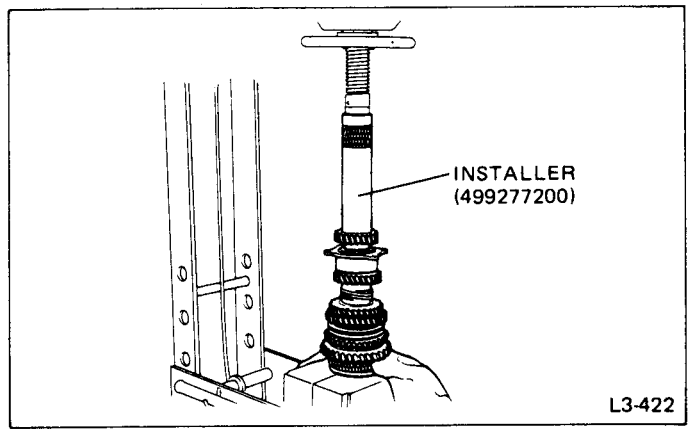

Fig. 160

(6) Install lock washer (42 x 53 x 2). Install lock nut (42 x 13) and tighten to the specified torque using SOCKET WRENCH (50).

Tightening torque:
245 ± 10 N·m (25 ± 1 kg-m, 181 ± 7 ft-lb)

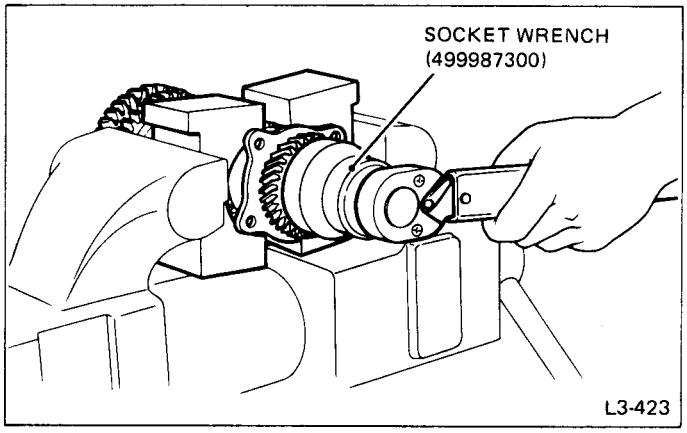

Fig. 161

a. Stake lock nut at two points.
b. Check that starting torque of roller bearing is 0.1 to 1.5 N·m (1 to 15 kg-cm, 0.9 to 13.0 in-lb).

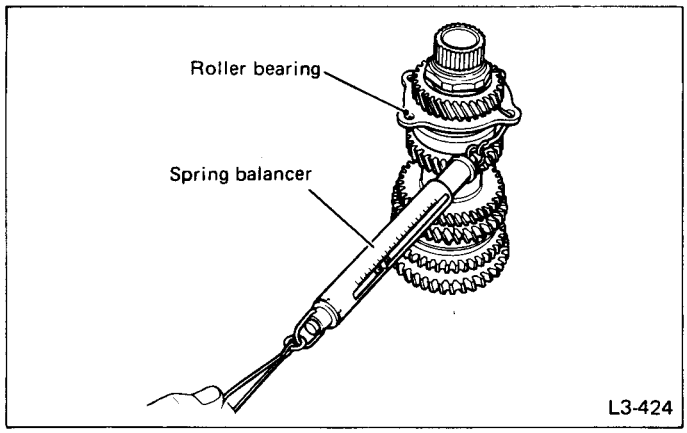

Fig. 162

3) Drive pinion shaft ASSY
(1) Install roller bearing onto drive pinion. Install washer (33 x 50 x 5) using INSTALLER and PRESS.

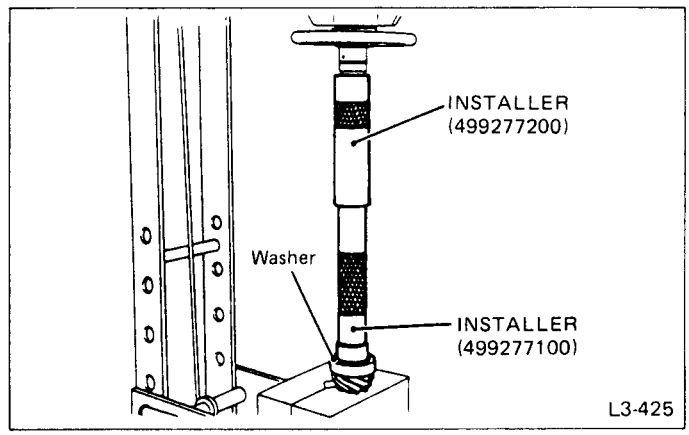

Fig. 163

When installing roller bearing, note its directions (front and rear) because knock pin hole in outer race is offset.

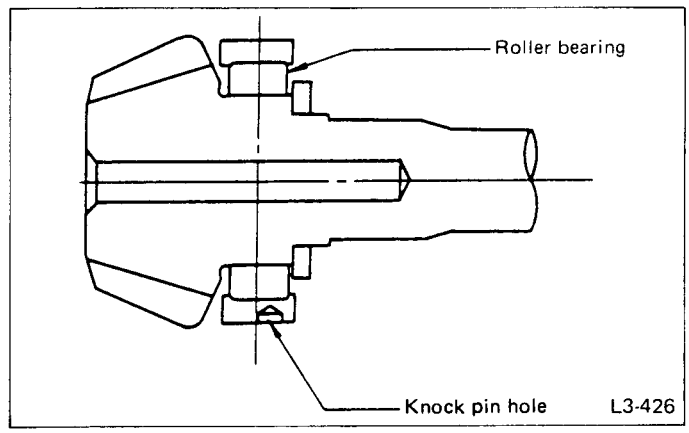

Fig. 164

(2) Install thrust bearing (33 x 50 x 3) and needle bearing (30 x 37 x 23). Install driven shaft ASSY.

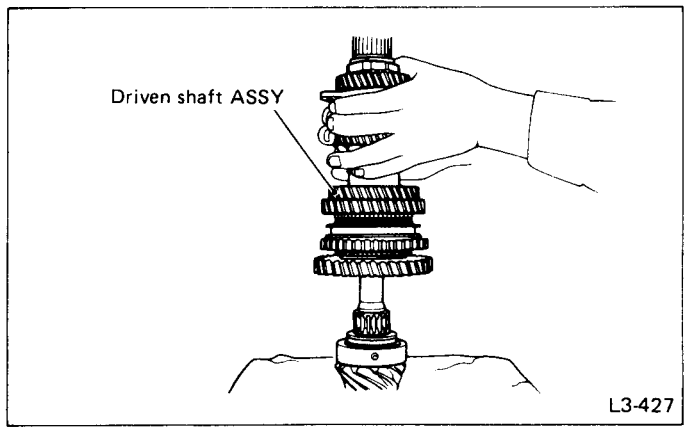

Fig. 165

(3) Install drive pinion collar ①, needle bearing ② (25 x 30 x 20), washer ③ (215 x 37.5 x 4), thrust bearing ④ (25 x 37.5 x 3), washer ⑤ (25 x 37.5 x 4), drive pinion spacer ⑥ and differential bevel gear sleeve ⑦ in that order.

Be careful because spacer must be installed in proper direction.

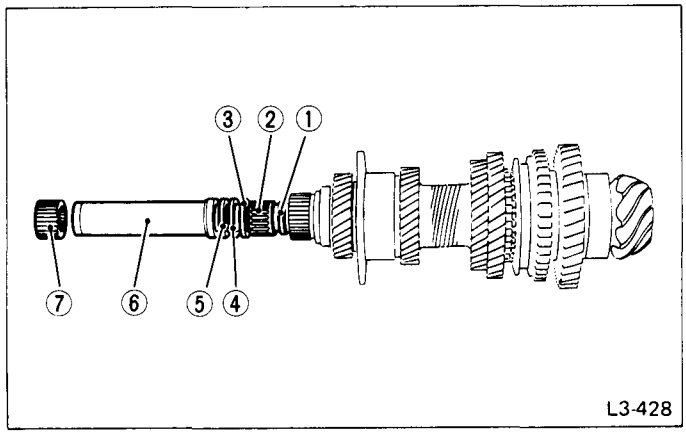

Fig. 166

4) Adjust thrust bearing preload.
(1) After completing steps 1) through 4) above, select a spacer and sleeve so that dimension H is zero through visual check. Position washer (18.3 x 30 x 4) and lock washer (18 x 30 x 2) and install lock nut (18 x 13.5).

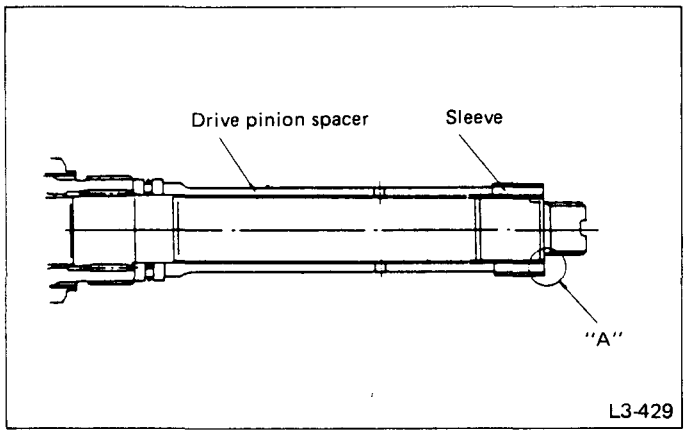

Fig. 167

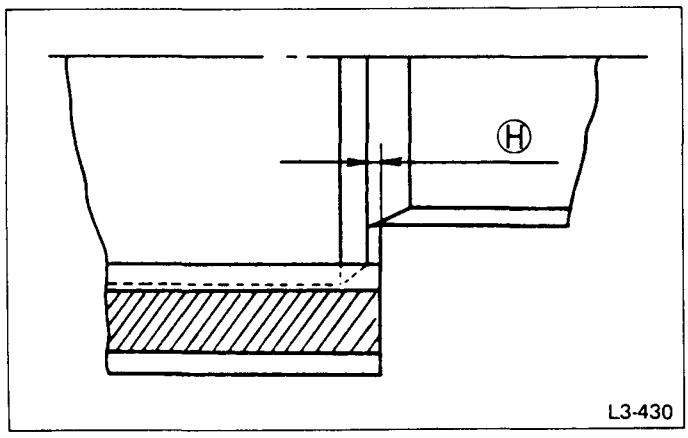

Fig. 168 Detail "A"

(2) Using HOLDER, measure starting torque while tightening lock nut to the specified torque.

Tightening torque:
118 ± 8 N·m (12 ± 0.8 kg-m, 86.8 ± 5.8 ft-lb)

Starting torque:
0.3 – 0.8 N·m (3 – 8 kg-cm, 2.6 – 6.9 in-lb)

Stake the lock nut at four points.

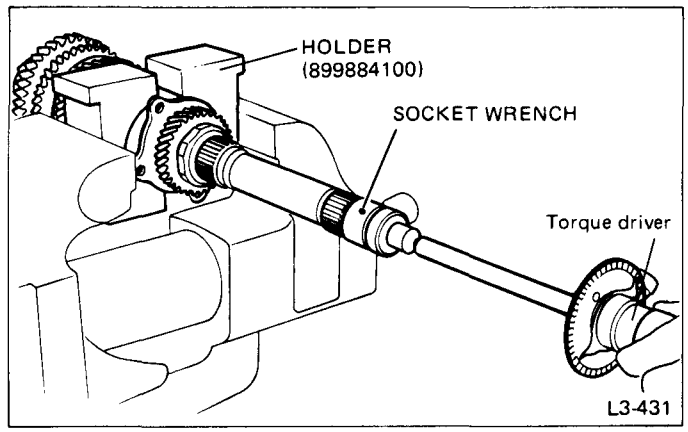

Fig. 169

(3) If starting torque is not within specified limit, select new spacer or sleeve and recheck starting torque.

Starting torque	Dimension H	Spacer/sleeve
Low	Small	Select thicker one.
High	Large	Select thinner one.

Drive Pinion Spacer	
Part No.	Length mm (in)
32288AA000	121.35 ± 0.02 (4.7775 ± 0.0008)
32288AA010	121.50 ± 0.02 (4.7835 ± 0.0008)
32288AA020	121.65 ± 0.02 (4.7894 ± 0.0008)

Differential Bevel Gear Sleeve	
Part No.	Length mm (in)
38956AA000	18.925 ± 0.01 (0.7451 ± 0.0004)
38956AA010	18.950 ± 0.01 (0.7461 ± 0.0004)
38956AA020	18.975 ± 0.01 (0.7470 ± 0.0004)
38956AA030	19.000 ± 0.01 (0.7480 ± 0.0004)
38956AA040	19.025 ± 0.01 (0.7490 ± 0.0004)
38956AA050	19.050 ± 0.01 (0.7500 ± 0.0004)
38956AA060	19.075 ± 0.01 (0.7510 ± 0.0004)

[5] Transmission Main Shaft ASSY

See p. 46

[6] Differential ASSY

See p. 48

C FWD

[1] Overall Transmission (FWD)

DISASSEMBLY

The following job should be followed before disassembly;
- Clean oil, grease, dirt and dust from transmission.
- Remove drain plug to drain oil. After draining, retighten it as before.
- Replace gasket with a new one.

Tightening torque:
41 – 47 N·m (4.2 – 4.8 kg-m, 30 – 35 ft-lb)

1) Attach transmission to TRANSMISSION STAND SET (399295120).
2) Remove release lever and clutch release bearing.
   (1) Remove two clips and release bearing holder.
   (2) Remove dust cover, release lever retainer spring and clutch release lever.

Be careful not to deform clips and retainer spring.

3) Remove rear case and shifter ASSY.
4) Remove four bolts holding ball bearing behind drive pinion shaft ASSY.
5) Putting vinyl tape around axle drive shafts.
6) Separate transmission case into right and left cases by loosening seventeen coupling bolts.

Work with nuts facing upward.

7) Remove drive pinion shaft ASSY from LH transmission.

Use a hammer claw, etc. to remove if too tight.

8) Remove transmission main shaft ASSY from LH transmission case.
9) Removing differential ASSY
Remove differential ASSY from transmission case.

a. Be careful not to confuse right and left roller bearing outer races.
b. Be careful not to damage retainer oil seal.

10) Removing 5th shifter fork
Remove spring pin from 5th shifter fork.

Tool No.	Tool name
398791700	STRAIGHT PIN REMOVER

11) Removing checking ball plugs
Remove three checking ball plugs from main case.

There is a spring and ball inside. Replace gasket with a new one.

12) Removing fork and rod
Remove 3-4 shifter fork and 3-4 fork rod by loosening shifter fork screw. Drive out spring pin from 1-2 shifter fork CP with STRAIGHT PIN REMOVER "2" (398791700), and remove fork CP and 1-2 fork rod.

When pulling out rod, keep other rod in neutral. Also, turn 3rd-4th rail 90° and remove it in order not to drop plunger.

13) Removing reverse idler gear
Pull out straight pin and reverse idler gear shaft. Then remove reverse idler gear CP and washer.

When pulling out straight pin, wash off oil and blow air on it for easy removal.

14) Removing arm and rod
Remove outer snap ring and pull out reverse shifter rod arm with ball, spring and interlock plunger from rod. Then take out rod.

When pulling out reverse shifter rod arm, be careful not to let ball pop out of arm.

15) Removing differential side retainer ASSY
Using WRENCH ASSY (499787000), remove differential side retainer ASSY from transmission case.

In FWD, this work can be done with WRENCH CP (399780111).

16) Removing speedometer driven gear
Remove outer snap ring and pull out speedometer driven gear. Next, remove speedometer shaft CP and washer from main case.

INSPECTION

See p. 31

ASSEMBLY

Replace gaskets with new ones.

1) Assembling parts in transmission case (LH).
① Install two plungers into case.

Be sure to insert the correct plunger.

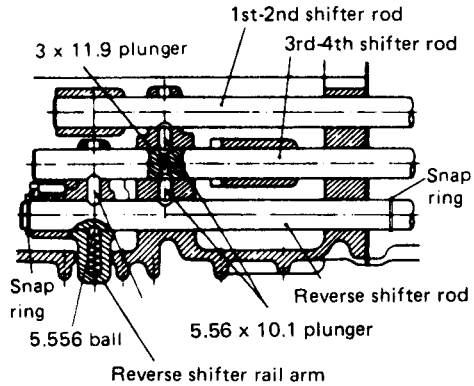

Fig. 170

② Install reverse idler gear and reverse idler gear shaft and retain with knock pin.

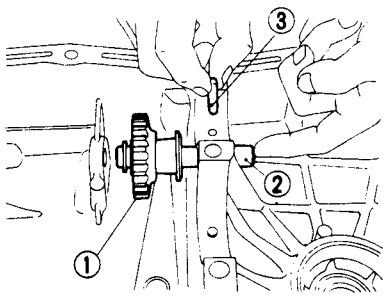

Fig. 171

③ Install reverse fork rod and reverse fork rod arm.

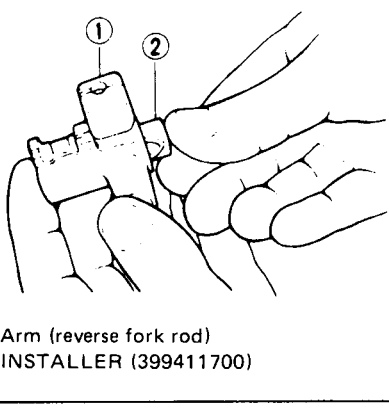

Fig. 172

Apply grease to plunger to prevent it from falling.

④ For reverse shifter rail, install ball, spring and gasket into case and tighten plug.

Tightening torque:
18.1 – 21.1 N·m
(1.85 – 2.15 kg-m, 13.4 – 15.6 ft-lb)

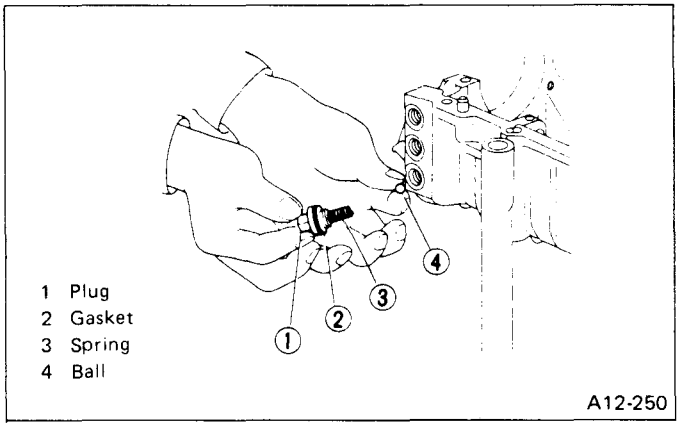

Fig. 173

⑤ Adjustment of reverse idler gear CP position.

Clearance:
1.5 – 3.0 mm (0.059 – 0.118 in)

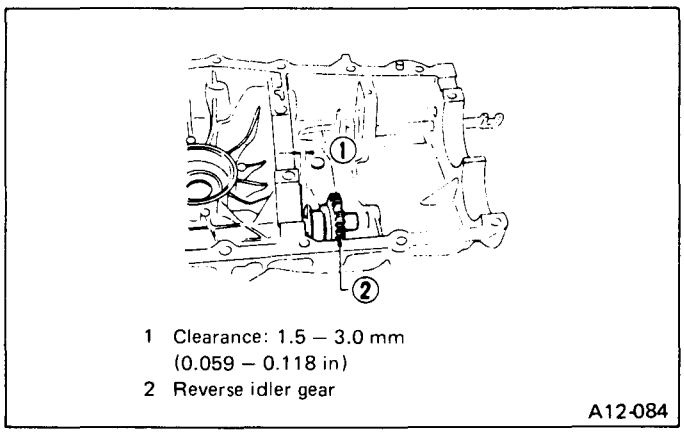

Fig. 174

Reverse shifter lever		
Part No.	Mark	Remarks
440627101	1	Recedes from the case wall
440627102	No mark	Standard
440627103	3	Moves to the case wall

⑥ Clearance adjustment

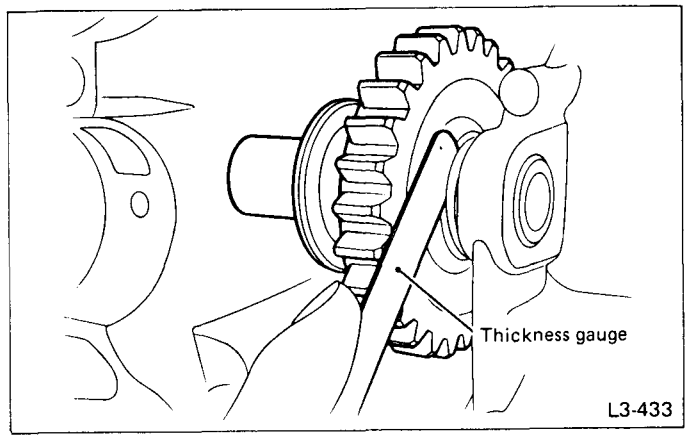

Fig. 175

Washer (15.5 x 21 x t mm)	
Part No.	Thickness mm (in)
803015081	0.6 – 0.8 (0.024 – 0.031)
803015082	1.0 – 1.2 (0.039 – 0.047)
803015083	1.4 – 1.6 (0.055 – 0.063)
803015084	1.8 – 2.0 (0.071 – 0.079)
803015085	2.2 – 2.4 (0.087 – 0.094)

⑦ Install rod and fork
- Interlock plunger (3 x 11.9)
- Fork rod for 3-4, 1-2 and 5th
- Shifter fork for 3-4, 1-2 and 5th

⑧ Install ball, checking ball spring, gasket and plug for 3-4 and 1-2.

2) Alignment marks/figures on hypoid gear set

See p. 34

3) Adjustment of drive pinion shim

See p. 34

Drive pinion shim	
Part No.	Thickness mm (in)
441967111	0.15 (0.0059)
441967112	0.175 (0.0069)
441967113	0.20 (0.0079)
441967114	0.225 (0.0089)
441967115	0.25 (0.0098)
441967116	0.275 (0.0108)
441967117	0.30 (0.0118)
441967118	0.50 (0.0197)

Use GAUGE ASSY (499917101)

4) Install differential ASSY onto LH transmission case.

a. Wrap the left and right splined sections of axle shaft with vinyl tape to prevent scratches.
b. Be careful not to fold the sealing lip of oil seal.

5) Install transmission main shaft ASSY.

See p. 35

6) Install drive pinion shaft with shims selected before into transmission case.

Ensure that the knock pin of the case is fitted into the hole in the bearing outer race.

7) Selection of suitable 1st-2nd, 3rd-4th and 5th shifter fork CPs.

1st-2nd shifter fork CP		
Part No.	Identification Mark	Remarks
32804AA001	1	Moves 0.2 mm (0.008 in) toward 2nd gear
32804AA011	No mark	Standard
32804AA021	3	Moves 0.2 mm (0.008 in) toward 1st gear

3rd-4th shifter fork		
Part No.	Identification Mark	Remarks
32810AA110	1	Moves 0.4 mm (0.016 in) toward 4th gear
32810AA120	2	Moves 0.2 mm (0.008 in) toward 4th gear
32810AA130	No mark	Standard
32810AA140	4	Moves 0.2 mm (0.008 in) toward 3rd gear
32810AA150	5	Moves 0.4 mm (0.016 in) toward 3rd gear

5th shifter fork CP		
Part No.	Identification Mark	Remarks
32812AA032	1	Moves 0.2 mm (0.008 in) toward gear side
32812AA042	No mark	Standard
32812AA052	3	Recedes 0.2 mm (0.008 in) from gear side

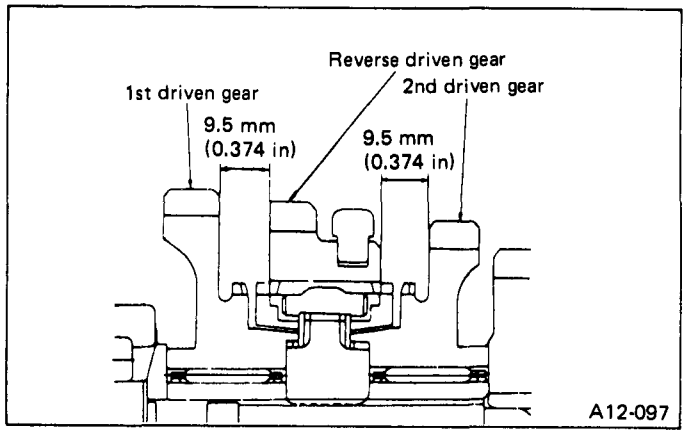

Fig. 176 1st-2nd shifter fork

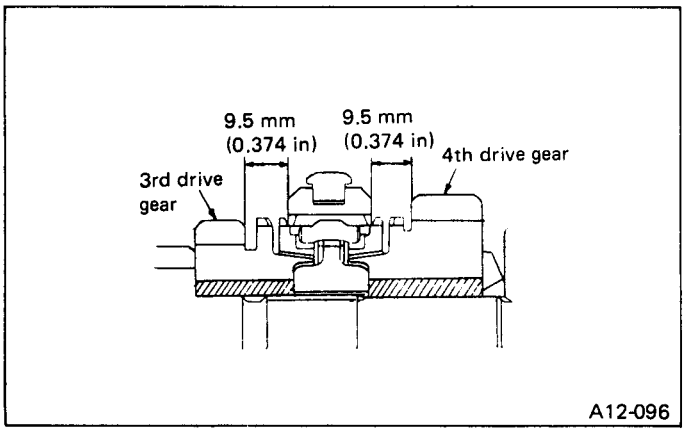

Fig. 177 3rd-4th shifter fork

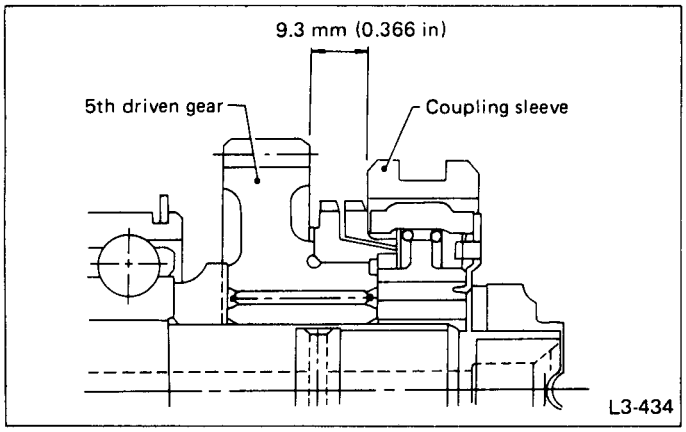

Fig. 178 5th shifter fork

8) Inspection of rod end clearance

Unit: mm (in)

	A	B
Clearance	0.3 – 1.6 (0.012 – 0.063)	0.3 – 1.6 (0.012 – 0.063)

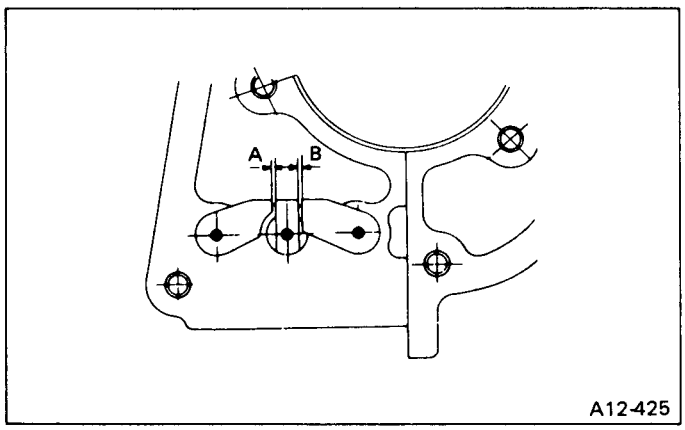

Fig. 179

9) Wipe off grease, oil and dust on the mating surfaces of transmission cases with white gasoline, and apply liquid gasket (Fuji Bond "C" or equivalent), and then put case (RH) and (LH) together.

10) Tighten 17 bolts with bracket, clip, etc. in the following sequence.

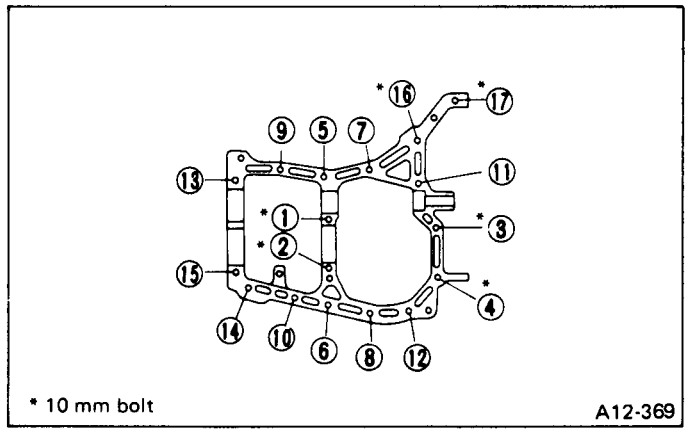

Fig. 180

Tightening torque:
8 mm bolt
23 – 26 N·m (2.3 – 2.7 kg-m, 17 – 20 ft-lb)
10 mm bolt
36 – 42 N·m (3.7 – 4.3 kg-m, 27 – 31 ft-lb)

a. Insert bolts from the bottom and tighten nuts at the top.
b. Put cases together so that drive pinion shim and input shaft holder shim are not caught up in between.
c. Confirm that counter gear and speedometer gear are meshed, and high-low shifter shaft is inserted perfectly.

11) Tighten ball bearing attaching bolts at the drive pinion shaft rear.

12) Backlash adjustment of hypoid gear and preload adjustment of roller bearing.

a. WRENCH CP (399780111) can be used instead of WRENCH ASSY (499787000).
b. Use HANDLE CP (499927000) instead of HANDLE (499927100).
c. See p. 37

13) Checking tooth contact of hypoid gear.

See p. 37

14) Fit O-ring into the groove of retainer and tighten it into the position where retainer has been tightened.

Carry out this job on both upper and lower retainers.

15) Selection of main shaft rear plate.

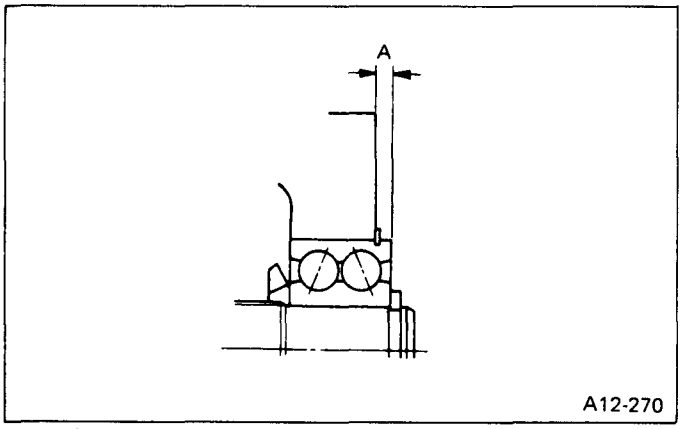

Fig. 181

Dimension A mm (in)	Part Number	Discrimination stamp
4.50 – 4.63 (0.1772 – 0.1823)	441347001	T81-1
4.37 – 4.50 (0.1720 – 0.1772)	441347002	T81-2

16) Install rear case & shifter ASSY.

Tightening torque:
23 – 26 N·m (2.3 – 2.7 kg-m, 17 – 20 ft-lb)

17) Neutral position adjustment

Reverse accent shaft		
Part No.	Identification Mark	Remarks
32188AA040	1	Neutral position is closer to 1st gear.
32188AA011	No mark	Standard
32188AA050	3	Neutral position is closer to reverse gear.

See p. 39

18) Reverse check plate adjustment.

See p. 40

19) Install clutch release lever and clutch release bearing.

[2] Rear Case & Shifter ASSY

DISASSEMBLY

1) Pull out shifter arm CP.
2) Loosen two 6-mm bolts and remove rear case oil guide.
3) Remove back lamp switch ASSY and neutral switch ASSY.

Replace aluminum gasket with a new one.

4) Remove filler with gasket from transmission rear case. Then remove reverse accent spring and ball (7.1438).
5) Remove reverse check sleeve ASSY.
6) Disassembling reverse check sleeve ASSY.

ASSEMBLY

1) Install oil seal (18 x 30 x 6) into bore on the back of rear case using a plastic hammer.

Apply a coat of gear oil to the mating surface and sealing lip of oil seal beforehand.

2) Install oil guide on rear case, and tighten with two 6-mm bolts.

Tightening torque:
6.4 N·m (0.65 kg-m, 4.7 ft-lb)

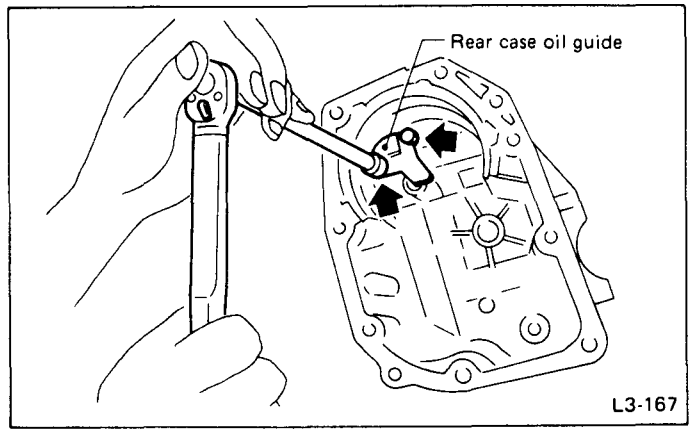

Fig. 182

3) Assembling reverse check sleeve ASSY.
① Install reverse accent shaft, check cam, return spring and check spring onto reverse check sleeve.

Be sure the bent section of reverse check spring is positioned in the groove in check cam.

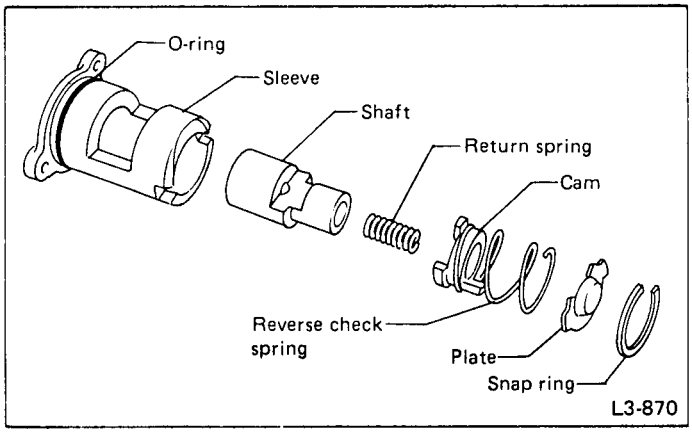

Fig. 183

② a. Hook the bent section of reverse check spring over reverse check plate.
b. Rotate cam so that the protrusion of reverse check cam is at the opening in plate.
c. With cam held in that position, install plate onto reverse check sleeve and hold with snap ring (Inner-28).
d. Position O-ring (35.4 x 1.5) in groove in sleeve.

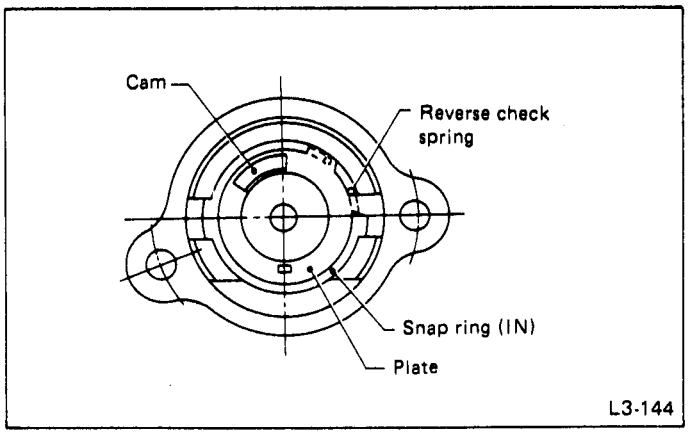

Fig. 184

a. Make sure the cutout section of reverse accent shaft is aligned with the opening in reverse check sleeve.
b. Spin cam by hand for smooth rotation.
If it does not return properly, replace reverse check spring.
c. Move cam and shaft all the way toward plate and release. If cam does not return properly, replace reverse check spring; if shaft does not, check for scratches on the inner surface of sleeve. If sleeve is in good order, replace spring.
d. Select a suitable reverse check plate by referring to "Neutral Position Adjustment."

4) Install reverse check sleeve ASSY to rear case, and tighten with bolts and washers.

Tightening torque:
10 N·m (1.0 kg-m, 7 ft-lb)

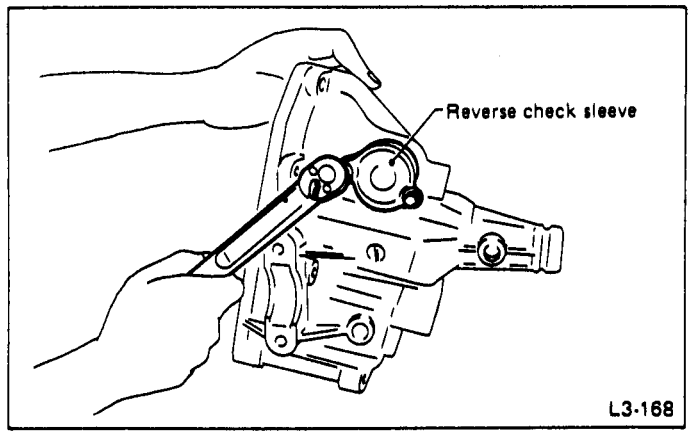

Fig. 185

5) Install ball (7.1438), reverse accent spring aluminum gasket, and plug in that order.

Tightening torque:
10 N·m (1.0 kg-m, 7 ft-lb)

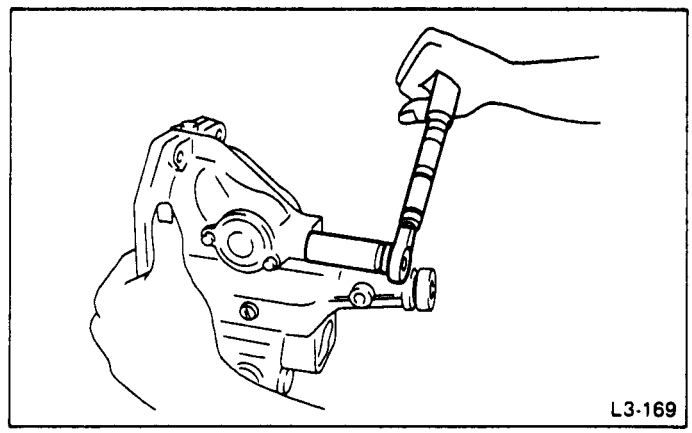

Fig. 186

6) Install back lamp and neutral switch ASSY on rear case.

Tightening torque:
18 N·m (1.8 kg-m, 13 ft-lb)

a. Do not forget to install aluminum washer.
b. Some models are not equipped with neutral switch ASSY.

7) Install shifter arm CP onto rear case.

Apply a coat of gear oil to arm CP. Also make sure oil seal is positioned in place.

Tool No.	Tool name
899714110	REMOVER

5) Remove 1st needle bearing inner race and gear and hub ASSY.

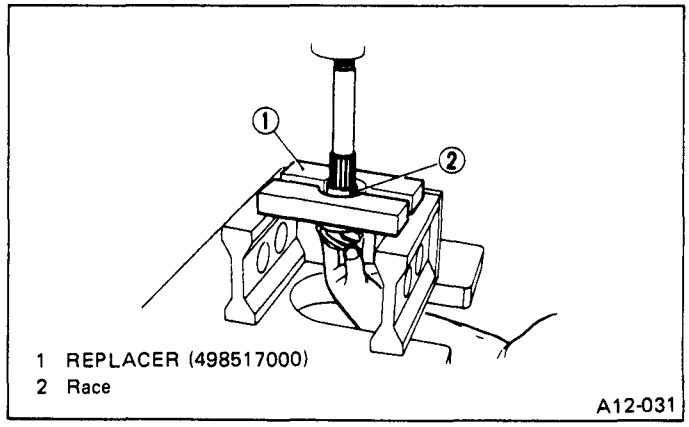

Fig. 187

[3] Drive Pinion Shaft ASSY

DISASSEMBLY

1) Remove locknut (22) from drive pinion with SOCKET WRENCH (35) (499987003), HOLDER (899884100), and a vice.

Remove caulking before taking off locknut.

2) Remove following parts:
- Insert stopper plate
- Insert guide
- Sleeve and hub ASSY
- Balk ring
- 5th driven gear
- Needle bearing (29 x 33 x 25.8)

3) Using REMOVER (899714110), TRANSMISSION MAIN SHAFT REMOVER (899864100), and a press, remove:
- Ball bearing (27 x 70 x 35)
- 4th and 3rd driven gear
- 5th needle bearing race
- 5th gear thrust washer

4) First remove 2nd driven gear and needle bearing (39 x 44 x 23.8) using REMOVER (899714110). Then, using a press, remove 1st driven gear, 2nd needle bearing inner race, and gear and hub ASSY.

Remove key before removing 2nd needle bearing inner race.

ASSEMBLY

1) Assemble gear & hub ASSY.

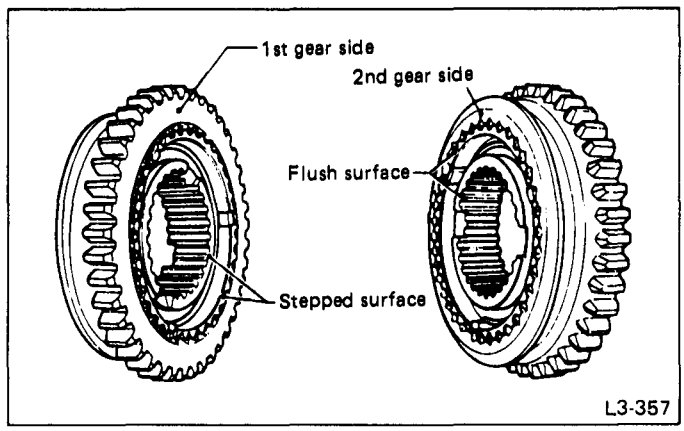

Fig. 188

Position open ends of springs 120° apart.

2) Assemble sleeve & hub ASSY.

Make sure bent sections of springs on both sides are kept 180° apart and hooked at hub's holes.

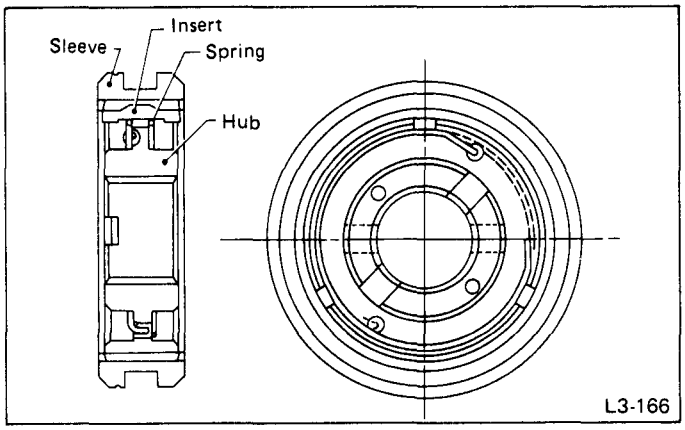

Fig. 189

3) Fit roller bearing in drive pinion shaft. Install 1st driven gear thrust plate.

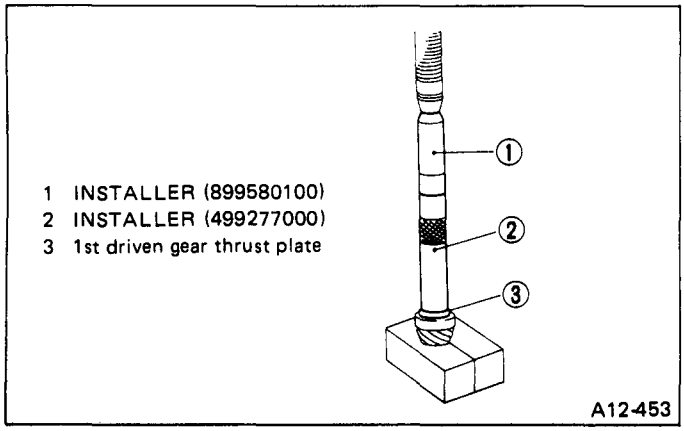

Fig. 190

4) Install needle bearing race.

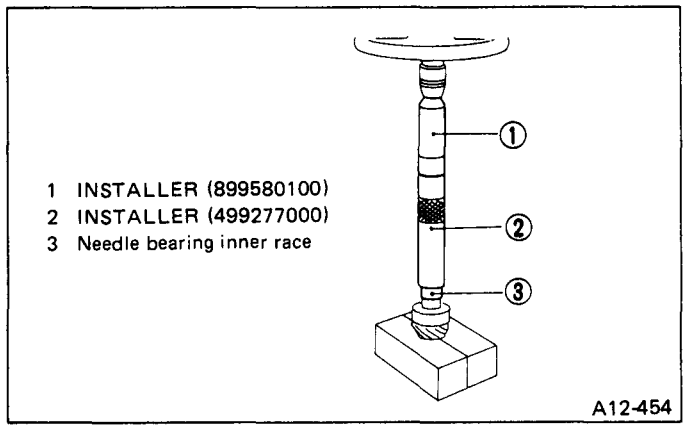

Fig. 191

5) Install needle bearing, 1st driven gear, 1st-2nd ring and gear & hub ASSY subassembled before.

Take care so that 1st-2nd synchronizer ring groove is in line with the insert.

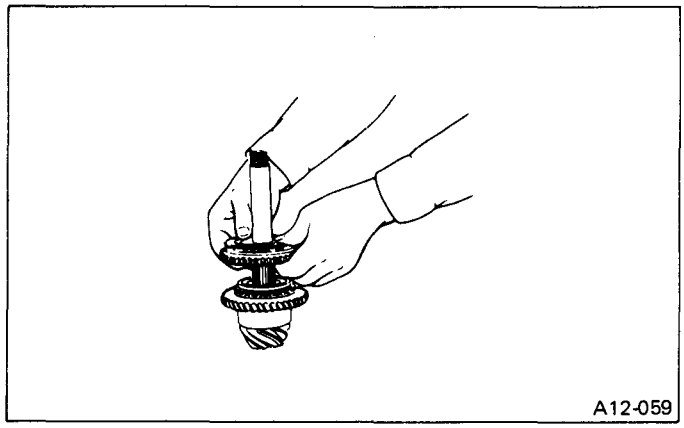

Fig. 192

6) Install needle bearing inner race.

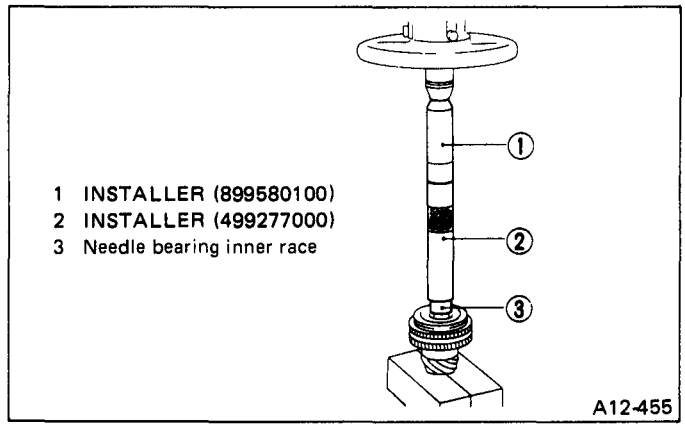

Fig. 193

7) Install needle bearing, 2nd driven gear.

8) Install key into the groove on drive pinion shaft and install 3rd-4th driven gear.

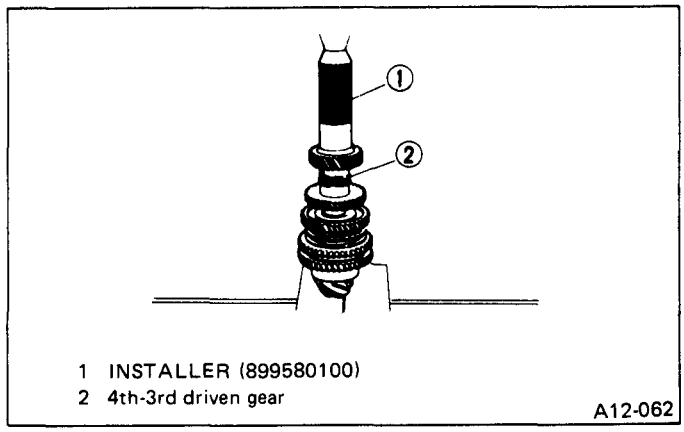

Fig. 194

9) Install ball bearing with the following special tool(s): INSTALLER (899874100) and/or INSTALLER (899580100).

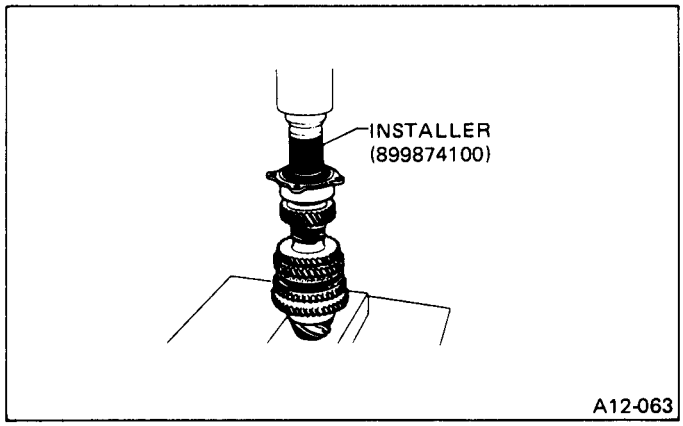

Fig. 195

Some ball bearings may be installed in the drive pinion shaft without press tightness, but it causes no problem in practical operation.

10) Install 5th driven gear thrust washer and then, install 5th needle bearing inner race.

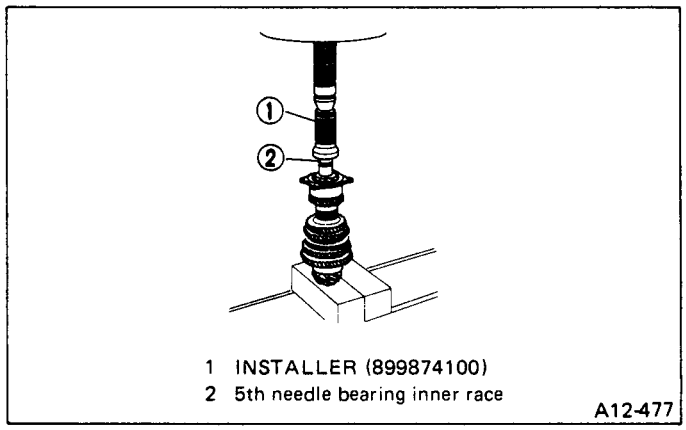

Fig. 196

11) Install needle bearing, 5th driven gear, rings, sleeve & hub ASSY, insert guide, insert stopper plate, lock washer and lock nut.

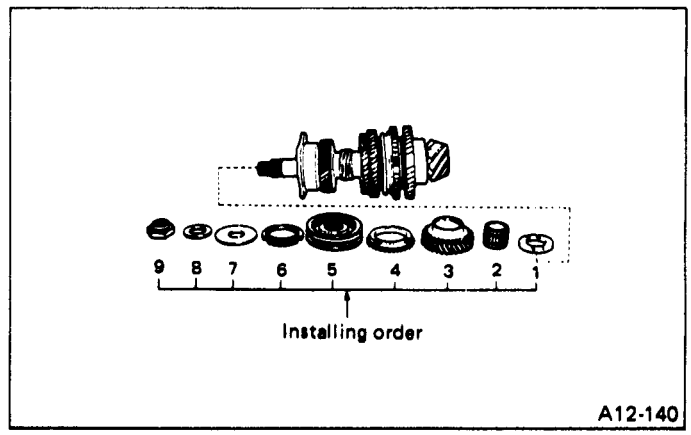

Fig. 197

12) Tighten lock nut-22 with SOCKET WRENCH (499987003) and HOLDER (899884100).

Tightening torque:
73 – 84 N·m (7.4 – 8.6 kg-m, 54 – 62 ft-lb)

Stake the lock nut at 2 points.

[4] Transmission Main Shaft ASSY

DISASSEMBLY

1) Put vinyl tape around main shaft splines to protect oil seal from damage. Then pull out oil seal and needle bearing by hand.
2) Removing locknut
Remove locknut (18 x 10).

Remove caulking before taking off locknut.

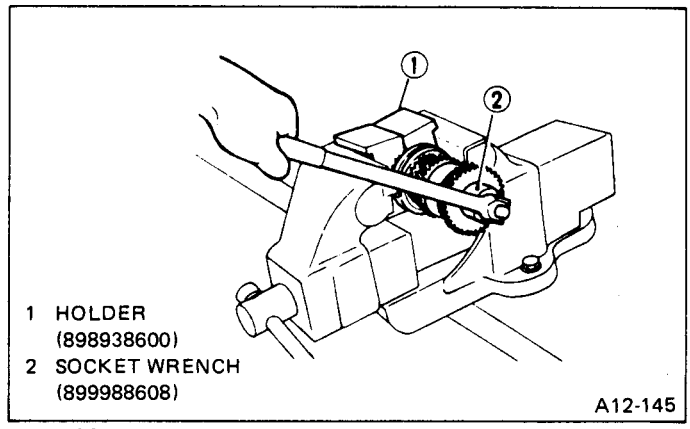

Fig. 198

3) Removing 5th drive gear
Remove 5th drive gear using REMOVER (899714110) and TRANSMISSION MAIN SHAFT REMOVER (899864100).
4) Remove woodruff key.
5) Remove the following parts;
- Ball bearing (23 x 58 x 27)
- 4th drive gear
- Sleeve and hub assembly
- 3rd drive gear CP
- 4th needle bearing race

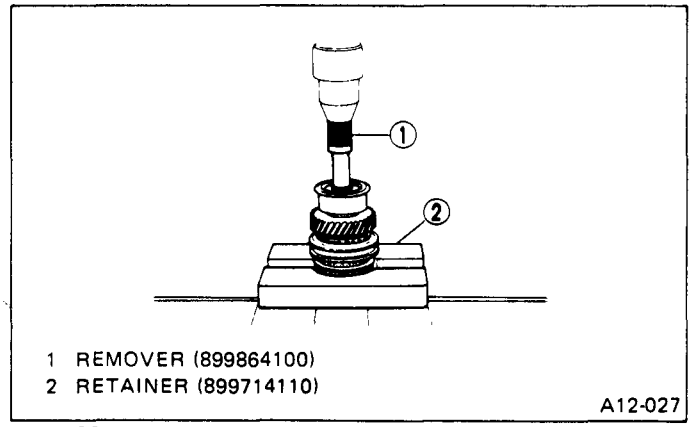

1 REMOVER (899864100)
2 RETAINER (899714110)
A12-027

Fig. 199

ASSEMBLY

1) Assemble sleeve & hub ASSY.

Make sure bent sections of springs on both sides are kept 180° apart and hooked at hub's holes.

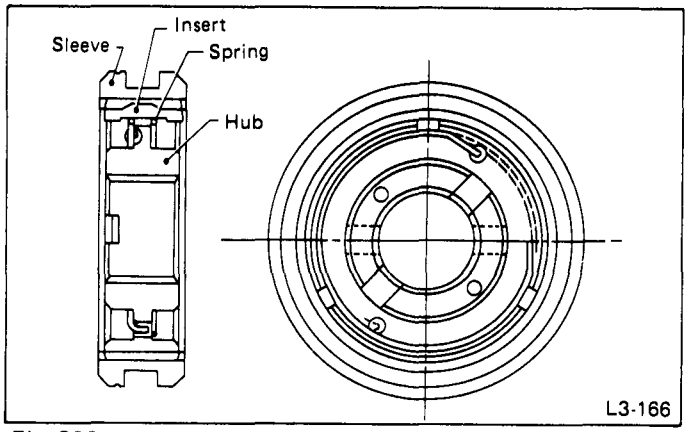

L3-166

Fig. 200

Before assembling main shaft, apply transmission oil to needle bearing, ball bearing and bushings sufficiently.

2) Install 5th needle bearing race with the following special tools.

INSTALLER	(899874100)
RETAINER	(899714110)

3) Install 3rd drive gear, ring and sleeve & hub ASSY sub-assembled before.

Take care so that the insert is in line with the ring groove.

4) Install 5th needle bearing race.

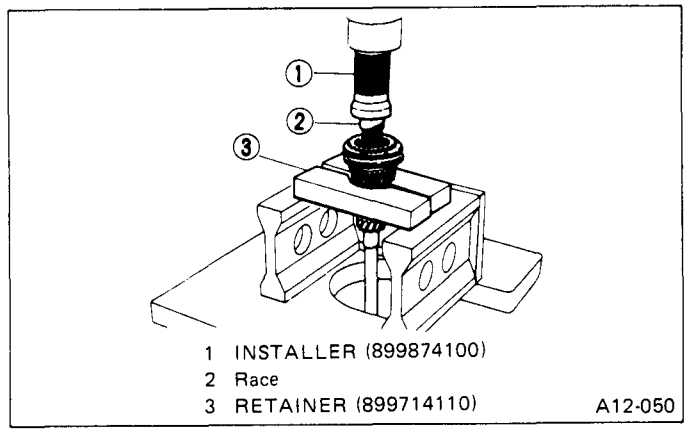

1 INSTALLER (899874100)
2 Race
3 RETAINER (899714110)
A12-050

Fig. 201

5) Install ring, 4th drive gear and 4th drive gear thrust washer.

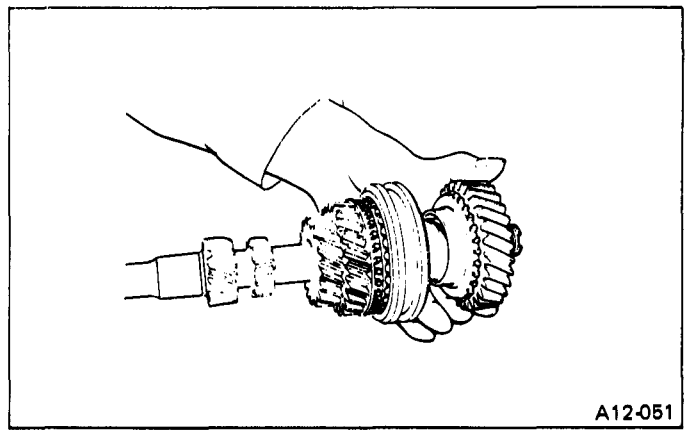
A12-051

Fig. 202

Pay attention to the assembling direction.

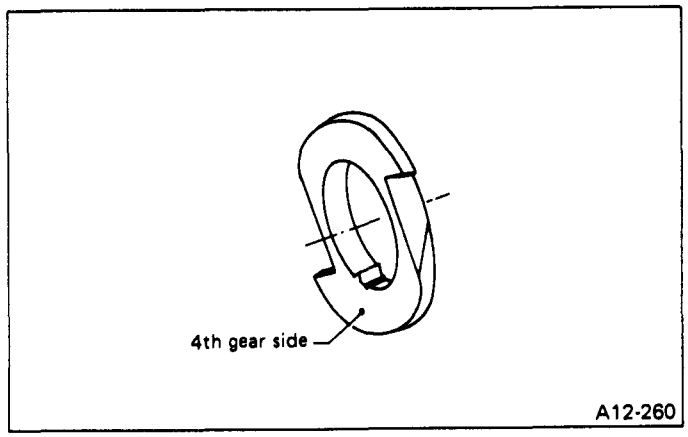

A12-260

Fig. 203

6) Install ball bearing.

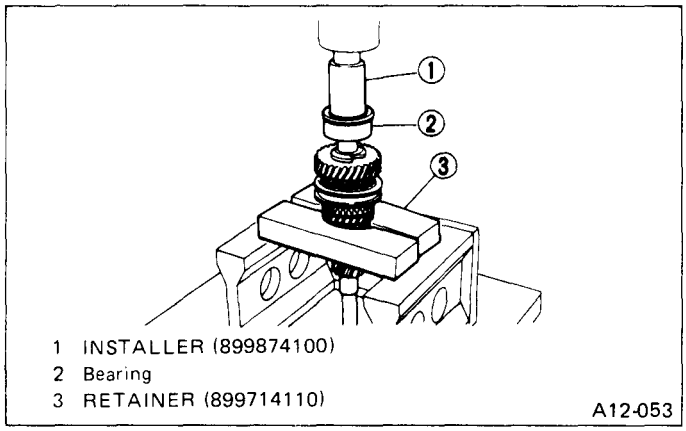

Fig. 204

7) Assemble snap ring with PRESS ASSY (899754110).

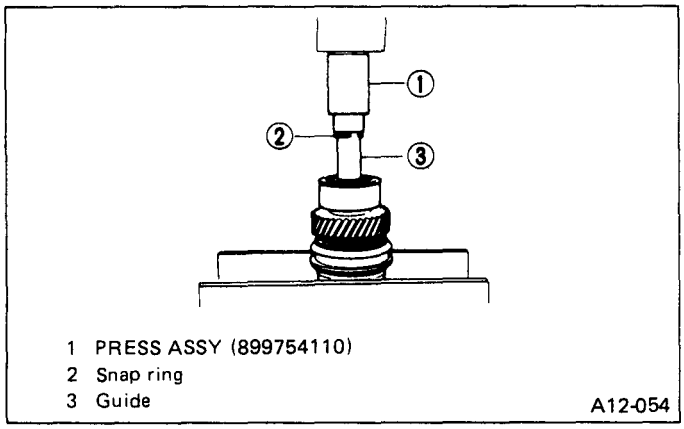

Fig. 205

Part No.	Thickness mm (in)
805022010	2.45 (0.0965)
805022011	2.48 (0.0976)
805022012	2.51 (0.0988)
805022013	2.54 (0.1000)
805022014	2.57 (0.1012)
805022015	2.60 (0.1024)
805022016	2.63 (0.1035)
805022017	2.66 (0.1047)
805022018	2.69 (0.1059)
805022019	2.85 (0.1122)
805022030	2.42 (0.0953)
805022031	2.39 (0.0941)

a. When reassembling a snap ring, always replace it with a new one.
b. Select a suitable snap ring from the following table so that the play in the axial direction is 0 to 0.05 mm (0 to 0.0020 in).

8) Assemble woodruff key and then 5th drive gear.

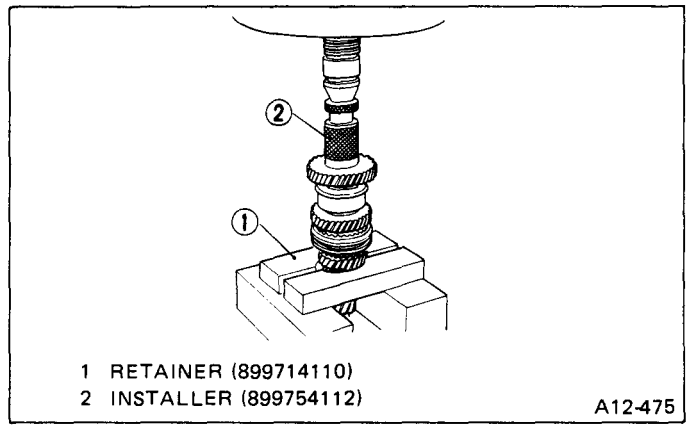

Fig. 206

When assembling key, pay attention to the groove.

9) Tighten lock nut.

Tightening torque:
73 – 84 N·m
(7.4 – 8.6 kg-m, 54 – 62 ft-lb)

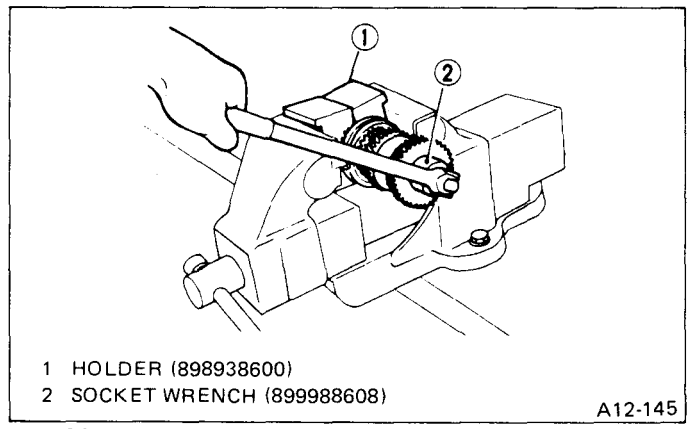

Fig. 207

After tightening the lock nut, stake it.

[5] Differential ASSY

DISASSEMBLY

1) Remove right and left snap rings from differential, and then remove two axle drive shafts.

During reassembly, reinstall each axle drive shaft in the same place from which it was removed.

2) Loosen ten bolts and remove hypoid drive gear.
3) Using STRAIGHT PIN REMOVER (899904100), drive out straight pin from differential ASSY toward crown gear.
4) Pull out pinion shaft, and remove differential bevel pinion and gear and washer (35.1 x 45 x t).
5) Remove roller bearing with puller ASSY (899524100).

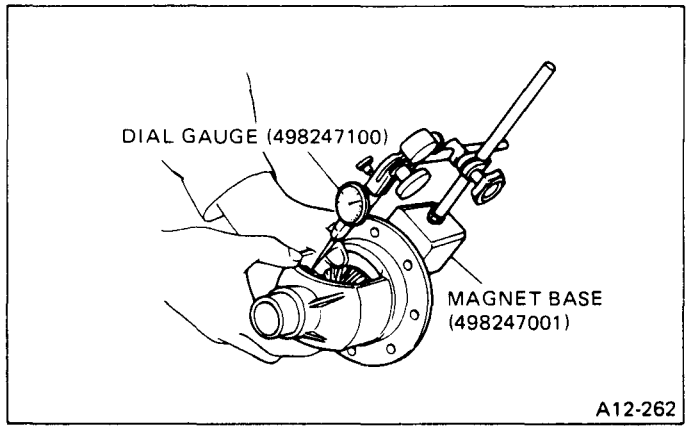

Fig. 209

Washers (35.1 x 45 x t mm)	
Part No.	Thickness mm (in)
803135011	0.925 – 0.950 (0.0364 – 0.0374)
803135012	0.950 – 0.975 (0.0374 – 0.0384)
803135013	0.975 – 1.000 (0.0384 – 0.0394)
803135014	1.000 – 1.025 (0.0394 – 0.0404)
803135015	1.025 – 1.050 (0.0404 – 0.0413)

ASSEMBLY

1) Install differential bevel gears and differential pinions together with washers on differential case, and then insert pinion shaft.

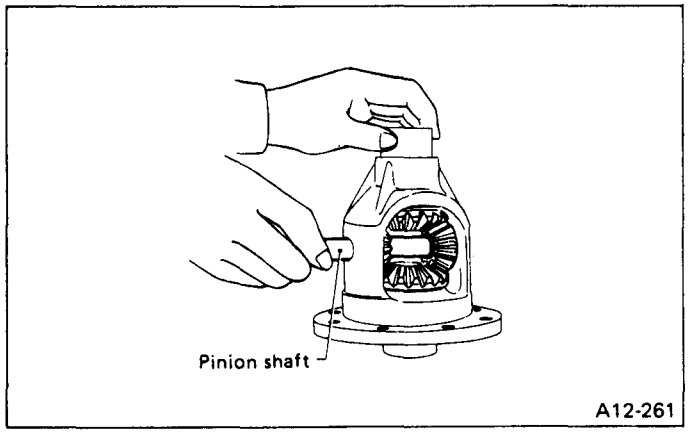

Fig. 208

2) Measure backlash between gear and pinion.
If the backlash is inappropriate, make adjustment by using proper washers.

Standard backlash:
0.13 – 0.18 mm (0.0051 – 0.0071 in)

3) Align the pinion shaft hole with the holes on differential case and drive straight pin by tapping lightly with hammer from the hypoid gear side. Finally drive pin until it falls in about 1 mm (0.04 in) with REMOVER (899904100).

Stake the hole portion after driving it into the differential case.

4) Install bearing cone on differential case with INSTALLER (399790110) and SEAT (399520105).

Notice that the cups of roller bearings are provided as a set.

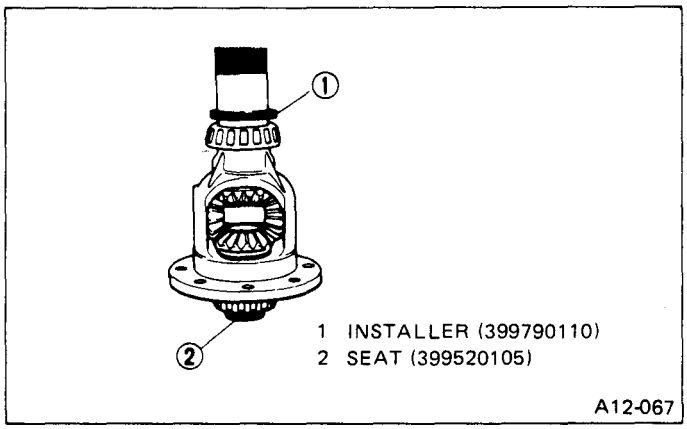

Fig. 210

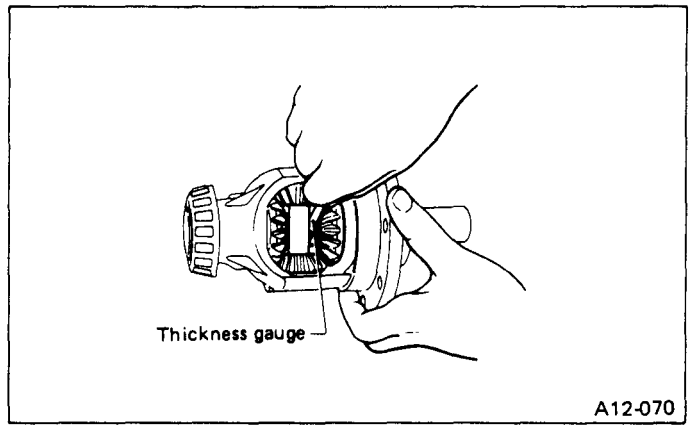

Fig. 211

5) Install hypoid gear on case.

Tightening torque:
57 – 67 N·m (5.8 – 6.8 kg-m, 42 – 49 ft-lb)

6) Install axle drive shafts and lock it with snap rings. Select proper snap ring so that the clearance between pinion shaft and tip of axle drive shaft is within the specified range.

Standard clearance:
0 – 0.20 mm (0 – 0.0079 in)

Outer snap ring	
Part No.	Thickness mm (in)
805026010	1.00 – 1.10 (0.0394 – 0.0433)
031526000	1.15 – 1.25 (0.0453 – 0.0492)

TROUBLESHOOTING

Condition and possible cause	Corrective action
1. Gears are difficult to intermesh. The cause for difficulty in shifting gears can be classified into two kinds: one is malfunction of the gear shift system and the other is malfunction of the transmission. However, if the operation is heavy and engagement of the gears is difficult, defective clutch disengagement may also be responsible. Check whether the clutch is correctly functioning, before checking the gear shift system and transmission.	
(a) Worn, damaged or burred chamfer of internal spline of sleeve and reverse driven gear.	Replace.
(b) Worn, damaged or burred chamfer of spline of gears.	Replace.
(c) Worn or scratched bushings.	Replace.
(d) Incorrect contact between synchronizer ring and gear cone or wear.	Correct or replace.
2. Gear slips out. (1) Gear slips out when coating on rough road. (2) Gear slips out during acceleration.	
(a) Defective pitching stopper adjustment.	Adjust.
(b) Loose engine mounting bolts.	Tighten or replace.
(c) Work fork shifter, broken shifter fork rail spring.	Replace.
(d) Worn or damaged ball bearing.	Replace.
(e) Excessive clearance between splines of synchronizer hub and synchronizer sleeve.	Replace.
(f) Worn tooth step of synchronizer hub (responsible for slip-out of 3rd gear).	Replace.
(g) Worn 1st driven gear, needle bearing and race.	Replace.
(h) Worn 2nd driven gear, needle bearing and race.	Replace.
(i) Worn 3rd drive gear and bushing.	Replace.
(j) Worn 4th drive gear and bushing.	Replace.
(k) Worn reverse idler gear and bushing.	Replace.
3. Unusual noise from transmission. If an unusual noise is heard when the car is parked with its engine idling and if the noise ceases when the clutch is disengaged, it may be considered that the noise comes from the transmission.	
(a) Insufficient or improper lubrication.	Lubricate or replace with specified oil.
(b) Worn or damaged gears and bearings. **If the trouble is only wear of the tooth surfaces, merely a high roaring noise will occur at high speeds, but if any part is broken, rhythmical knocking sound will be heard even at low speeds.**	Replace.

Condition and possible cause	Corrective action
4. Broken differential (case, gear, bearing, etc.) Abnormal noise will develop and finally it will become impossible to continue to run due to broken pieces obstructing the gear revolution.	
(a) Insufficient or improper oil. (b) Use of vehicle under severe conditions such as excessive load and improper use of clutch. (c) Improper adjustment of taper roller bearing. (d) Improper adjustment of drive pinion and crown gear. (e) Excessive backlash due to worn differential side gear, washer or differential pinion. (f) Loose crown gear clamping bolts.	Disassemble differential and replace broken components and at the same time check other components for any trouble, and replace if necessary. Readjust bearing preload and backlash and face contact of gears. Add recommended oil to specified level. Do not use vehicle under severe operating conditions.
5. Differential and hypoid gear noises. Troubles of the differential and hypoid gear always appear as noise problems. Therefore noise is the first indication of the trouble. However noises from the engine, muffler, tire, exhaust gas, bearing, body, etc. are easily mistaken for the differential noise. Pay special attention to the hypoid gear noise because it is easily confused with other gear noises. There are following four kinds of noises. (1) Gear noise when driving: If noise increase as vehicle speed increases it may be due to insufficient gear oil, incorrect gear engagement, damaged gears, etc. (2) Gear noise when coasting: Damaged gears due to maladjusted bearings and incorrect shim adjustment. (3) Bearing noise when driving or when coasting: Cracked, broken or damaged bearings. (4) Noise which mainly occurs when turning: Unusual noise from differential side gear, differential pinion, differential pinion shaft, etc.	
(a) Insufficient oil (b) Improper adjustment of crown gear and drive pinion. (c) Worn teeth of crown gear and drive pinion. (d) Loose roller bearing. (e) Distorted crown gear or differential case. (f) Worn washer and differential pinion shaft.	Lubricate. Check tooth contact. Replace in a set. Readjust bearing preload. Readjust crown gear to drive pinion backlash and check tooth contact. Replace. Replace.

AUTOMATIC TRANSMISSION AND DIFFERENTIAL

3-2

SUBARU

1988

Page

MECHANISM AND FUNCTION 2
1 Cross Sectional View 2
2 Electronic Control System Schematic 4
3 Construction and Features of Each Component 5
4 Power Transmission System 63
5 Fluid Passages 73
6 Range Select Mechanism 75
7 Parking Mechanism 76
SPECIFICATIONS AND SERVICE DATA 77
1 Specifications 77
2 Location and Dimension of Adjusting Parts 79
3 Location and Installing Direction of Thrust Needle Bearing and Washer .. 81
COMPONENT PARTS 82
SERVICE PROCEDURE 92
1 General Precaution 92
2 Disassembly of Overall Transmission 94
3 Disassembly, Inspection and Assembly of Each Component 104
4 Assembly of Overall Transmission 121
TROUBLESHOOTING 138
1 Troubleshooting for Electrical Transmission Control System 139
2 Preliminary Inspection 145
3 Troubleshooting Chart 146
4 On-Car Service 148
5 Performance Test 159

MECHANISM AND FUNCTION

1 Cross Sectional View

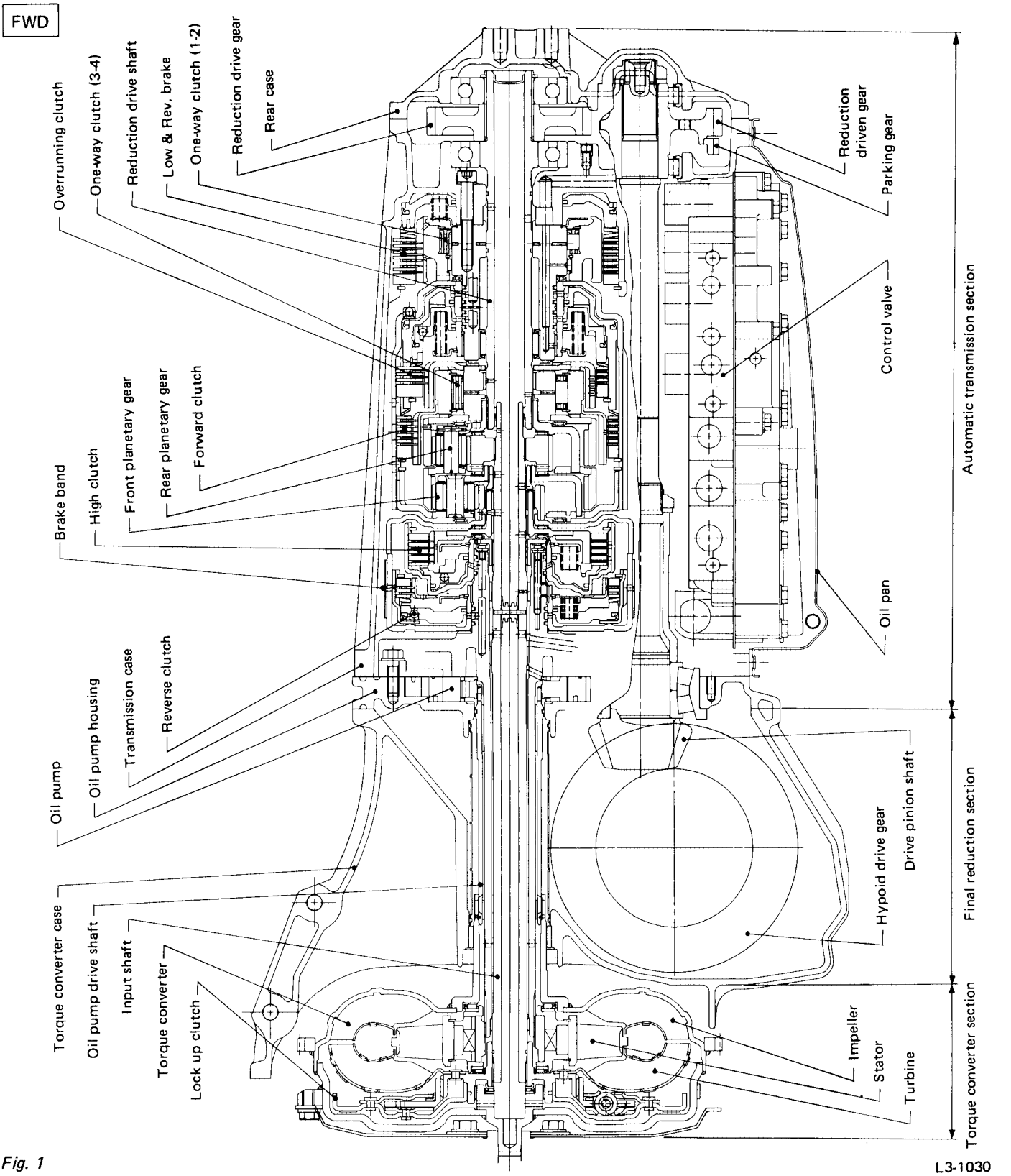

Fig. 1

4WD

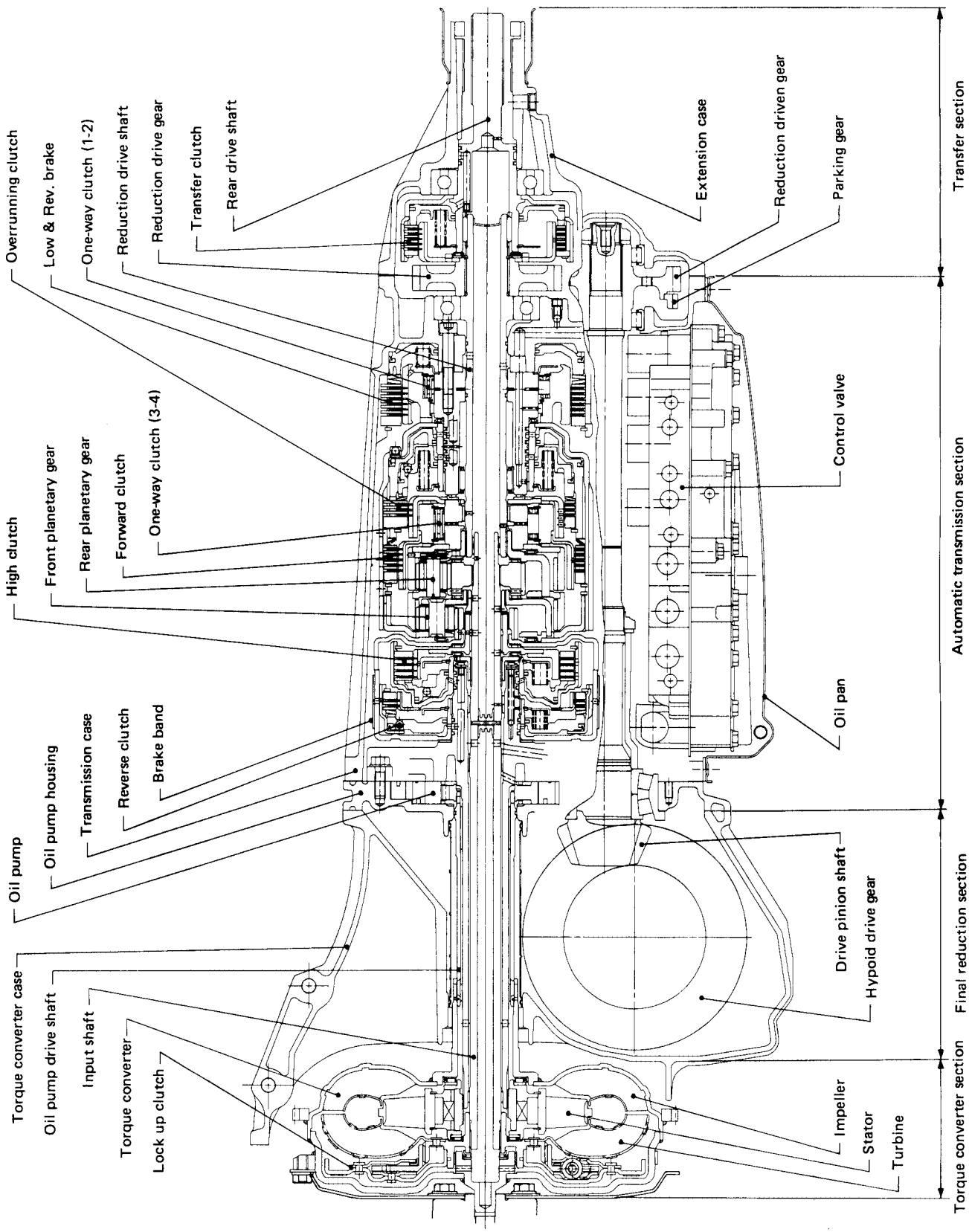

Fig. 2

L3-1031

2 Electronic Control System Schematic

FWD

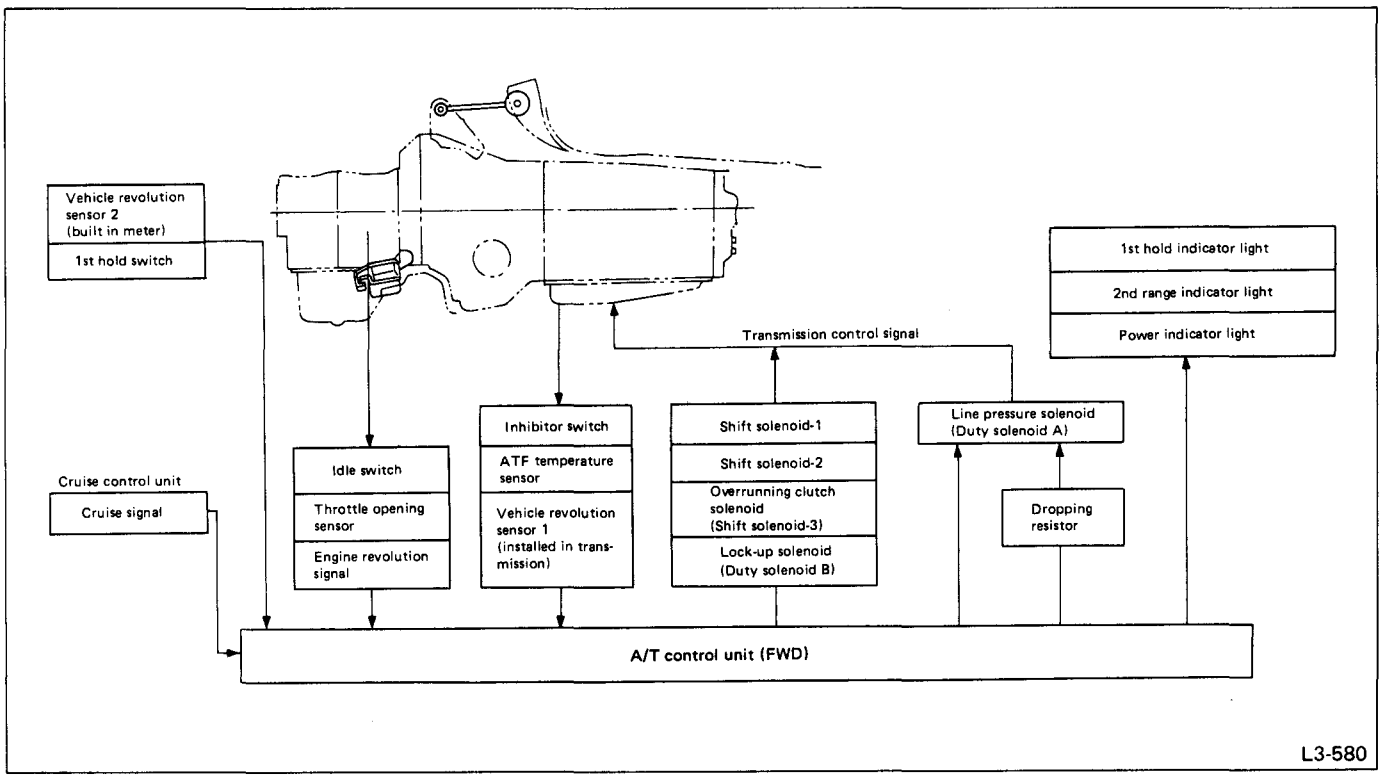

Fig. 3

4WD

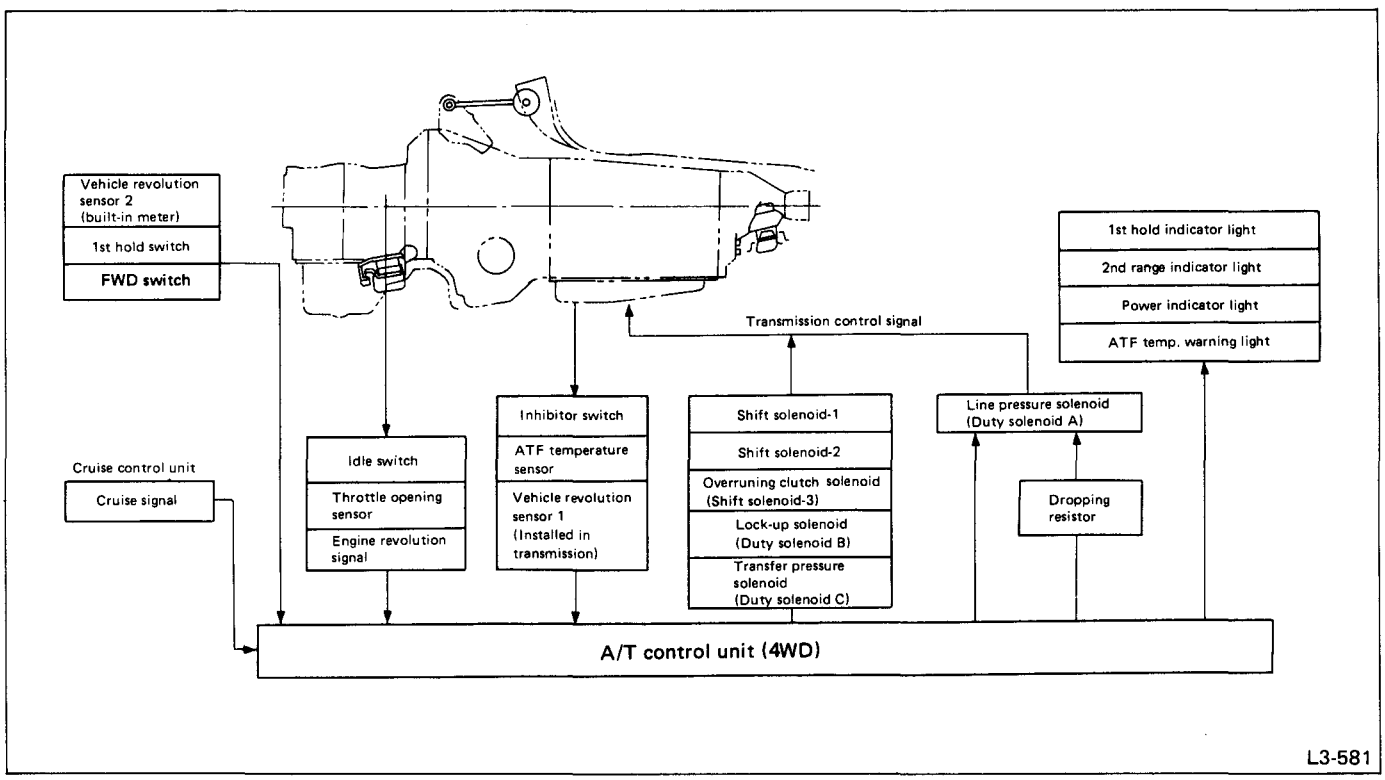

Fig. 4

3 Construction and Features of Each Component

3-1 Torque Converter

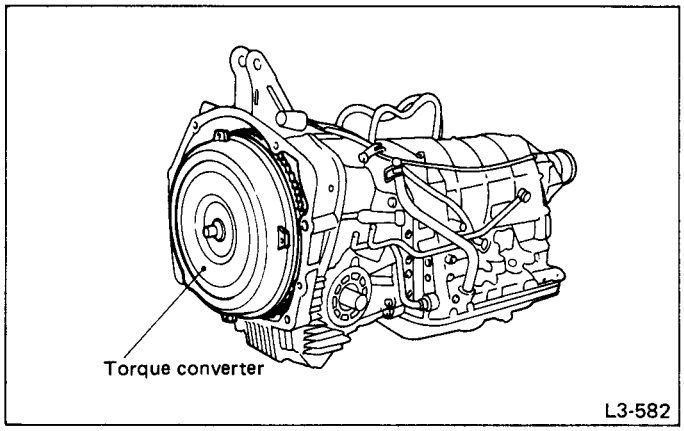

Fig. 5

Construction and Function

1) CONSTRUCTION

- The torque converter is composed of impeller, turbine, stator, and lock-up clutch. It is filled with oil; therefore it must not be disassembled.
- The impeller is directly coupled to the crankshaft via a drive plate. A sleeve for driving the oil pump, which is the source of the hydraulic pressure for the automatic transmission, is welded to the rear of the impeller.
- The turbine transmits multiplied engine torque in the torque converter range, unmultiplied engine torque in the coupling range, or engine torque itself directly through the lock-up clutch to the automatic transmission via the input shaft spline fitted to the internal spline of the turbine hub.
- The stator incorporates a Sprague type one-way clutch. The stator is spline-fitted to the oil pump cover via the inner race of the one-way clutch, and secured to the torque converter case.

2) FUNCTION

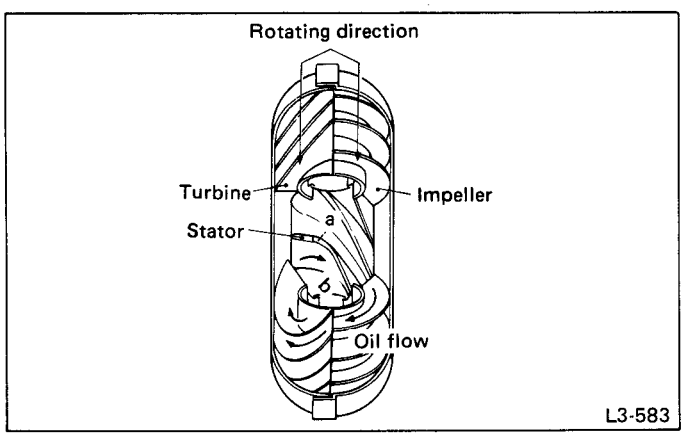

Fig. 6 Function of torque converter

When the impeller rotates, centrifugal force pushes out oil which then enters the turbine. The oil flows along the turbine blade and exerts force on the blade. This causes the turbine to rotate and power is transmitted to the input shaft.

If turbine speed is below impeller speed, the oil leaving the turbine flows in the direction impeding impeller rotation (a in Fig. 6). This direction is then changed by the stator so that the oil will assist impeller rotation (b in Fig. 6). With this action, the torque is multiplied.

The stator is subject to reverse torque when it changes the direction of oil flow, hence it must be secured to the casing. As turbine speed increases and approaches impeller speed, the oil from the turbine begins to push directly on the back of the stator blade. (This changeover point is called the "coupling point".) If the stator is still fixed under this condition, the oil flow will be impeded by the stator. To avoid this, the stator is mounted to the case via a one-way clutch so that it can rotate freely in the same direction as the impeller and turbine.

3) PERFORMANCE

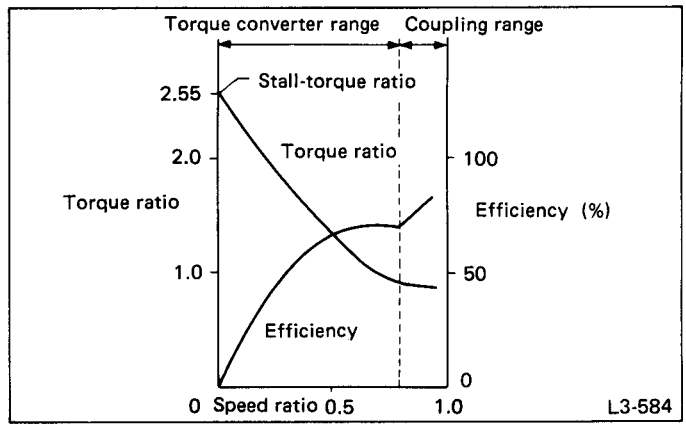

Fig. 7

The performance curve of the torque converter is shown in Fig. 7. The torque ratio, speed ratio, and efficiency respectively are represented by the following equations.

$$\text{Torque ratio} = \frac{\text{Turbine shaft torque}}{\text{Impeller shaft torque}}$$

$$\text{Speed ratio} = \frac{\text{Turbine shaft speed}}{\text{Impeller shaft speed}}$$

$$\text{Efficiency} = \frac{\text{Output horse-power}}{\text{Input horse-power}} \times 100\ (\%)$$

The torque multiplication range with stator fixed is called the "torque converter range". The range in which the stator rotates together with the impeller and turbine is called the "coupling range". In this coupling range, the torque converter functions similarly to the fluid coupling, and the torque is not multiplied. When the speed ratio is zero (0), that is, the

condition in which the impeller shaft (engine side) alone rotates and the turbine shaft does not rotate, is called the "stall point" (the vehicle is at a standstill). At this stall point, when in full throttle, the torque ratio of the turbine shaft and impeller shaft is at a maximum. The torque ratio at this point is called the "stall torque ratio", and the engine speed is called the stall speed.

4) LOCK-UP CONTROL – MECHANISM

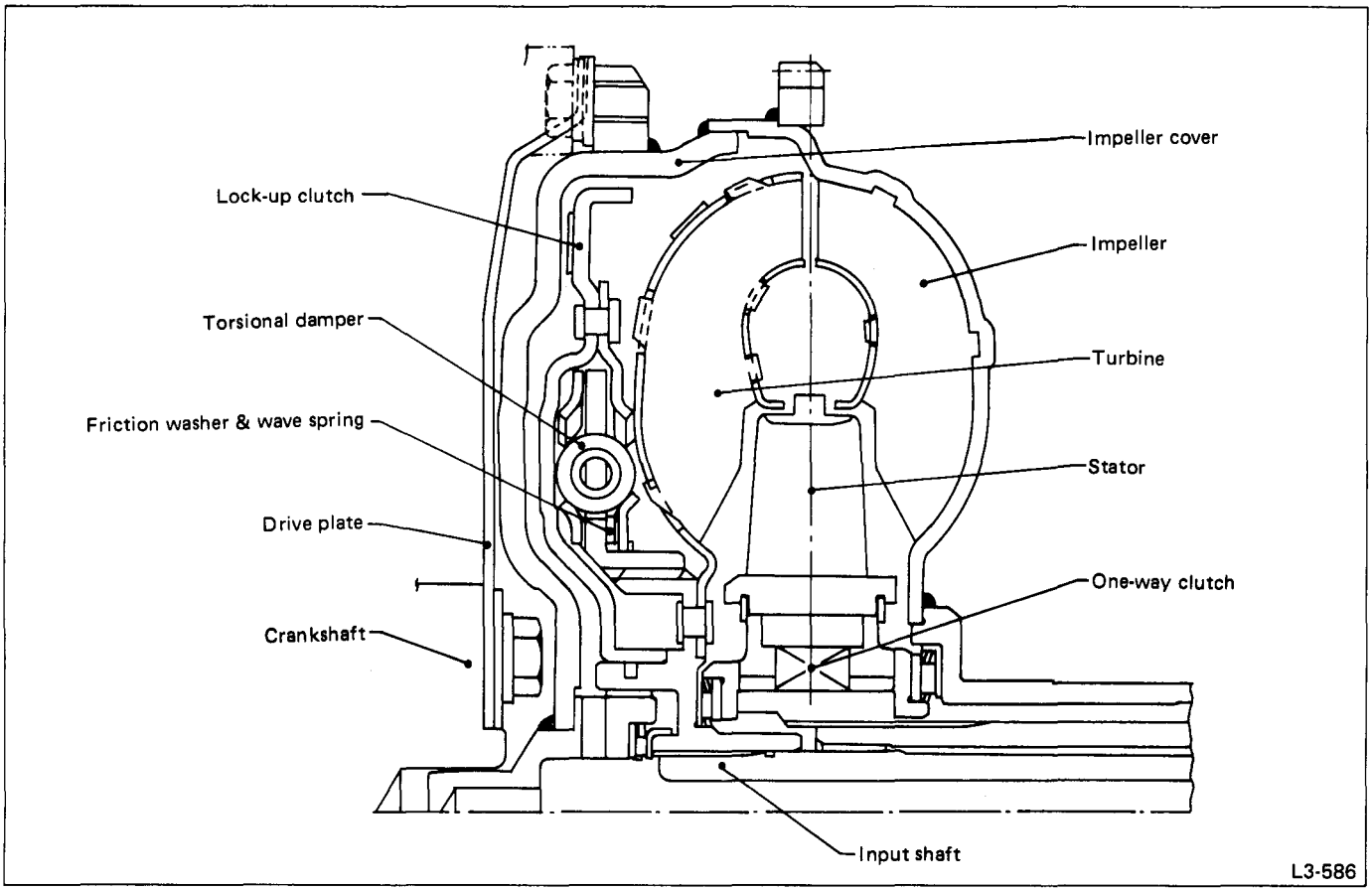

Fig. 8

The control unit controls the 50 Hz duty control (pulse width modulation) solenoid by changing its on/off time ratio. The lock-up control valve actuated by this solenoid switches the oil passages, and controls the hydraulic pressure applied to the lock-up clutch.

Pulse Width Modulation

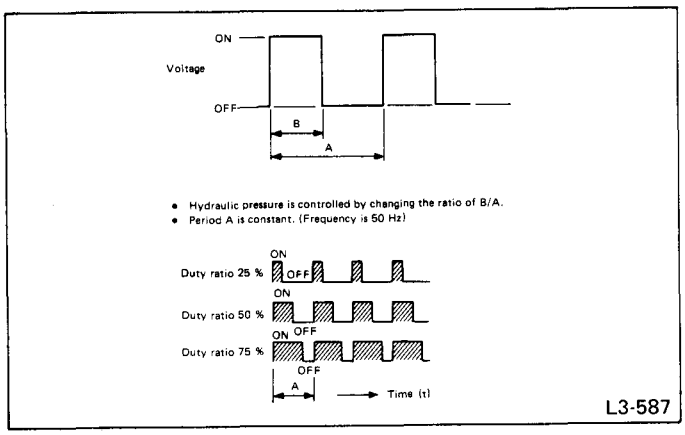

Fig. 9

The duty control solenoid is operated by applying on-off voltage pulses; and the percentage modulation is used to indicate its performance. This percentage modulation is also called the duty ratio, which is represented by the following expression.

$$\text{Duty ratio} = \frac{\text{ON time}}{\text{ON time + OFF time}} \times 100\,(\%) = \frac{B}{A} \times 100\,(\%)$$

The repetition period A is defined as follows:

Period A = ON time + OFF time

Pulse width modulation means variation of duty ratio while keeping period A constant.

Content of lock-up control

<table>
<tr><th colspan="2"></th><th>Control content</th><th>Remarks</th></tr>
<tr><td>Lock-up control

Lock-up on
Duty ratio 95%
Lock-up off
Duty ratio 5%</td><td>(1) Normal control</td><td>
• Lockup on/off characteristics are set for each range, gear position and pattern by throttle opening and vehicle speed.
• Fuel consumption, power performance and shift characteristics are taken into account.
<table>
<tr><th>Range</th><th>Mode</th><th>Purpose</th></tr>
<tr><td rowspan="2">D</td><td>Normal</td><td>Lower fuel consumption</td></tr>
<tr><td>Power</td><td>Higher performance</td></tr>
</table>
</td><td>
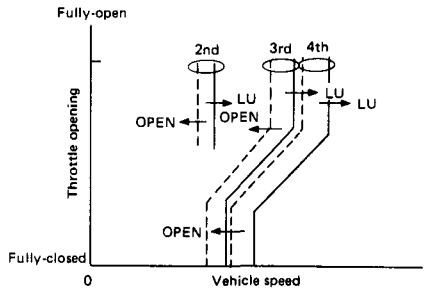

L3-588
Fig. 10

• Lock-up non-operation condition
1) ATF temperature 40°C (104°F) or lower.
2) 1st speed, N, R, P.
3) During gear shifting.
4) When throttle is fully closed. If V> 140 km/h (87 MPH), lock-up operates even when throttle is fully closed.
5) Rapid accelerator pedal depression.
</td></tr>
<tr><td></td><td>(2) Smooth control</td><td>When switching from lock-up off to lock-up on, oil pressure for "lock-up apply" is changed gradually to ensure smooth lock-up operation.</td><td></td></tr>
</table>

5) LOCK-UP CONTROL – OPERATION

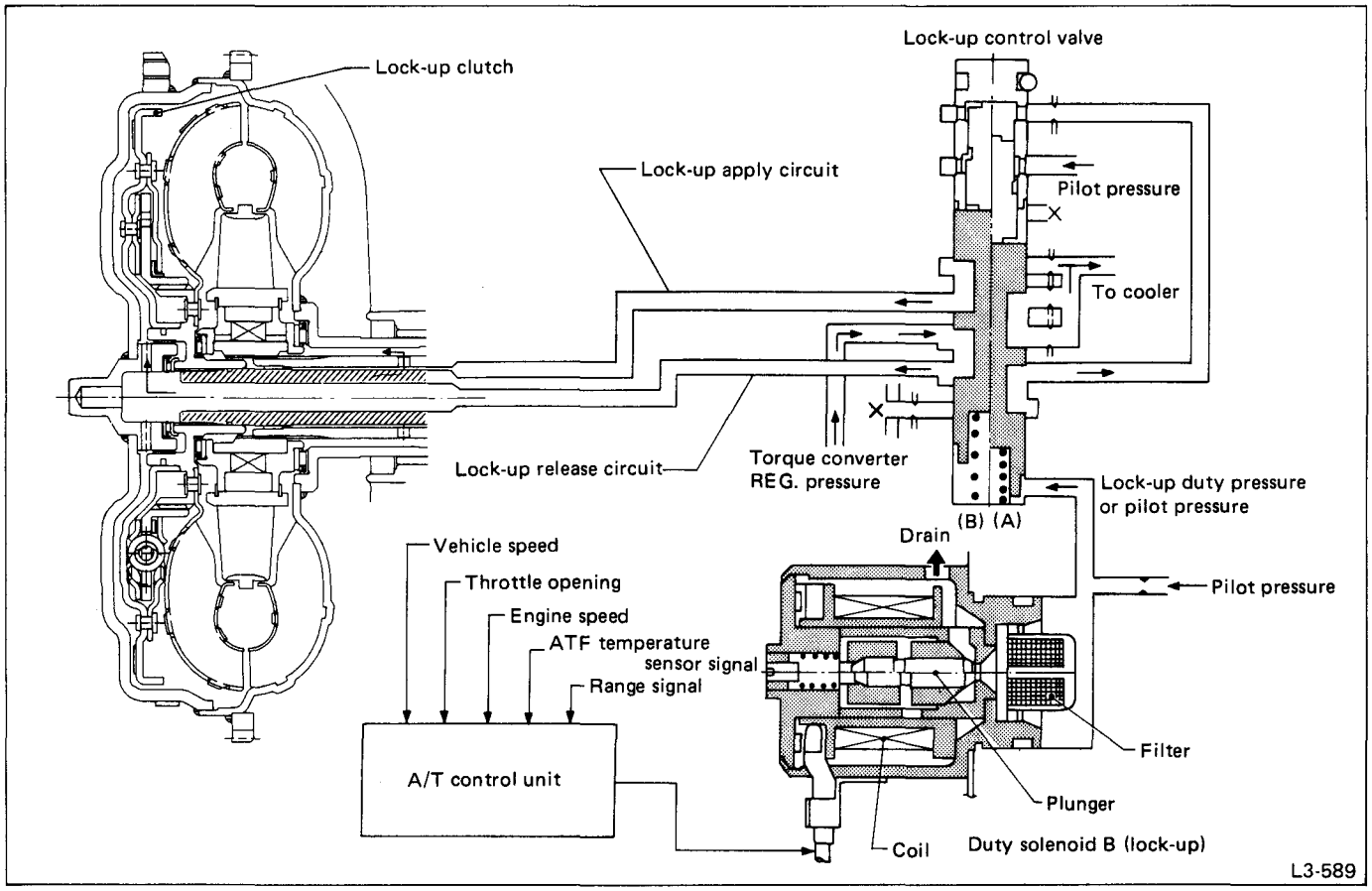

Fig. 11

The lock-up control valve is pushed downward by torque converter REG pressure and pilot pressure. It is pushed upward by lock-up duty pressure and spring force.

(1) During Lock-up Operation

Oil pressure at the lock-up control duty solenoid valve is drained (duty ratio 95%) by a signal from the automatic transmission control unit so that no lock-up duty pressure is developed and the lock-up control valve remains in condition (A). As a result, hydraulic oil flows into the lock-up apply circuit. On the other hand, the lock-up release circuit drains. This causes a pressure differential across the lock-up piston. The piston is then forced against the impeller cover and turned as an integral unit with the cover. Thus, power from the engine is directly transmitted to the transmission input shaft. That is, the transmission is directly coupled to the engine.

(2) During Non-Lock-up Operation

In this mode, the lock-up control duty solenoid is driven at a 5% duty ratio. This causes the lock-up duty pressure (pilot pressure) to be generated. With this pressure, the lock-up control valve is set to condition (B), and hydraulic oil flows into the lock-up release circuit. On the other hand, the lock-up apply circuit is connected to the oil cooler in the radiator. Accordingly, the relationship between "lock-up release pressure lock-up apply pressure" is established. As a result, the lock-up piston is forced to separate from the impeller cover, and power is transmitted from impeller to turbine to input shaft, as with an ordinary torque converter coupling.

(3) During Smooth Control

When the lock-up clutch activates, the clutch partially engages. Lock-up apply pressure increases smoothly to engage the lock-up clutch.

(4) Non-Lock-up Operation During "1st Speed", "N", "R" and "P"

In this mode of operation, pilot pressure is generated, and the lock-up control valve is set to condition (B) where lock-up is inoperative.

3-2 Oil Pump

1) CONSTRUCTION

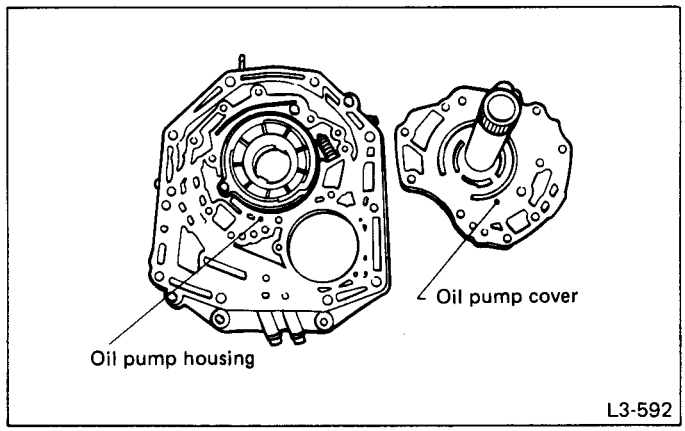

Fig. 12

The vane pump is housed in the oil pump housing. It consists of a rotor, vanes, vane rings, cam ring, control piston, return spring, seal ring and oil pump cover.
Hydraulic pressure (feedback pressure) from the oil passage (2) of the pressure regulator valve is applied to the back of the control piston.

2) OPERATION

(1) The automatic transmission fluid (ATF) is drawn through the oil strainer mounted under the control valve ASSY, and is routed to the transmission case, to the oil pump housing, and to the oil pump cover. It then goes to the suction port of section A shown in the Figure.
(2) The ATF sucked into section A rotates in the direction of the arrow (driven directly by engine), and is compressed at the delivery side of section B. It is then discharged.
(3) The discharged ATF flows from the oil pump cover to the oil pump housing. It then goes to the transmission case, the control valve and to the regulator valve, thus serving as hydraulic oil and lubricating oil for the torque converter, valves, clutch and brake.
(4) As engine speed increases, the delivery rate of the vane pump also increases.
(5) Feedback pressure from the regulator valve is applied to section C in the Figure. The cam ring position (the amount of eccentricity) is controlled by this pressure so that the pump delivery rate remains constant at speeds exceeding the preset pump speed.
(6) As the cam ring position changes, the suction volume at section A varies. In this manner, the pump delivery volume is controlled.

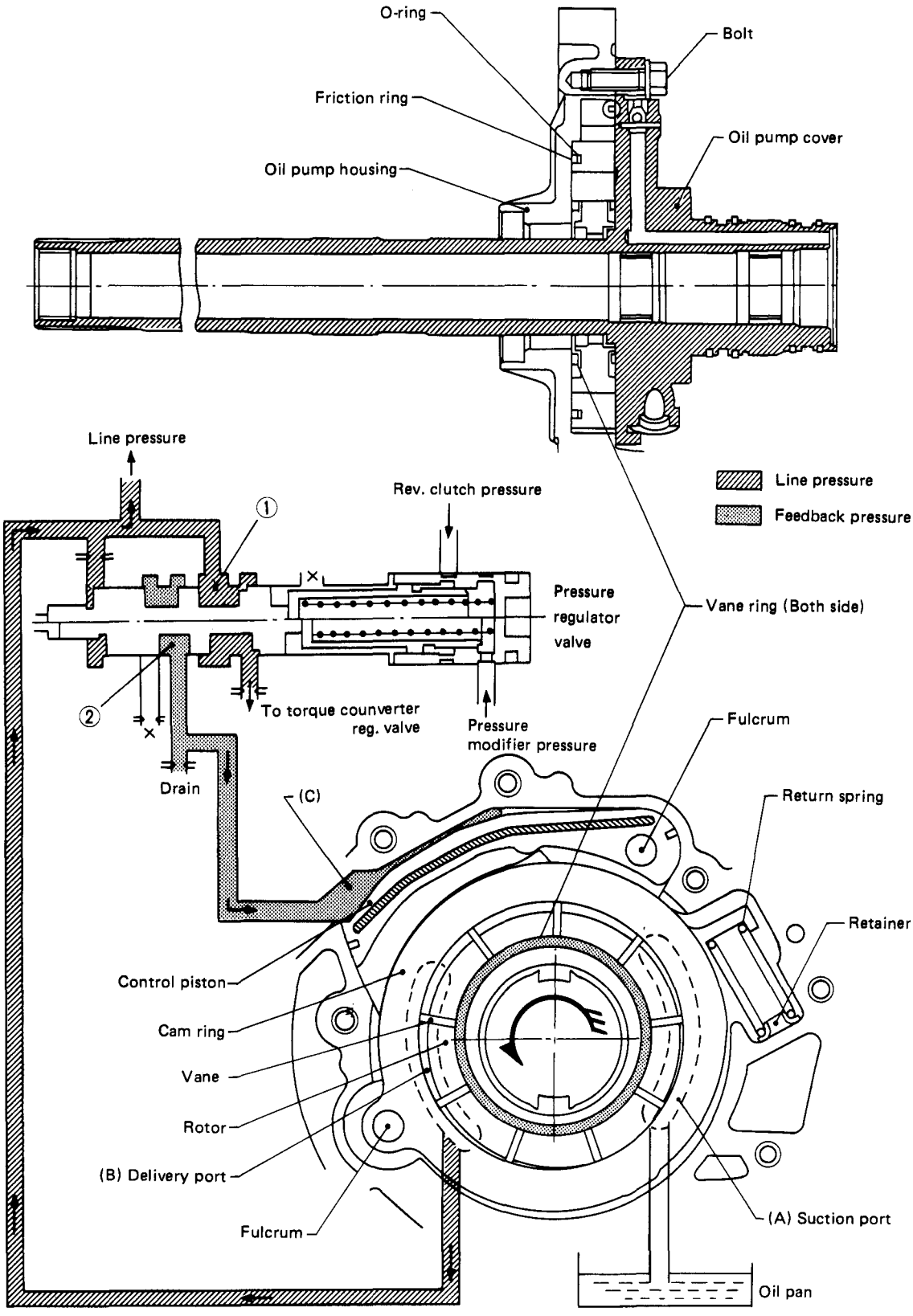
O-ring
Bolt
Friction ring
Oil pump cover
Oil pump housing
Line pressure
Rev. clutch pressure
Line pressure
Feedback pressure
①
Pressure
regulator
valve
Vane ring (Both side)
②
To torque counverter
reg. valve
Pressure
modifier pressure
Fulcrum
Drain
(C)
Return spring
Retainer
Control piston
Cam ring
Vane
Rotor
(B) Delivery port
Fulcrum
(A) Suction port
Oil pan

Fig. 13

L3-593

3-3 Transmission

The planetary gear train uses two sets of simple planetary gears (front planetary gear and rear planetary gear), four sets of multi-plate clutches (reverse clutch, high clutch, forward clutch, and overrunning clutch), one brake band, one set of multi-plate brake, and two sets of one-way clutches (one-way clutch 1-2 and one-way clutch 3-4) in order to allow shifting of four forward speeds and one reverse speed.

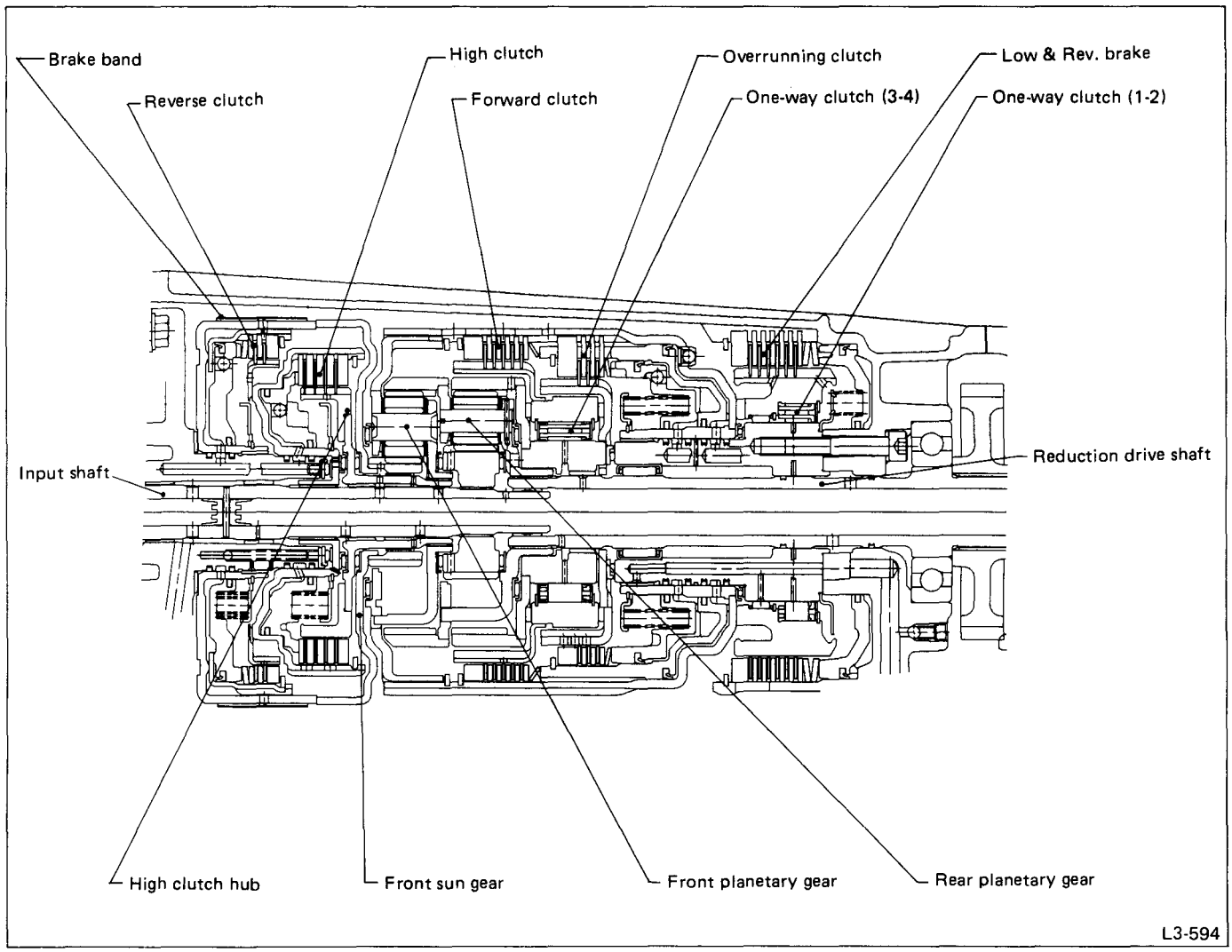

Fig. 14

1) OPERATING PRINCIPLE

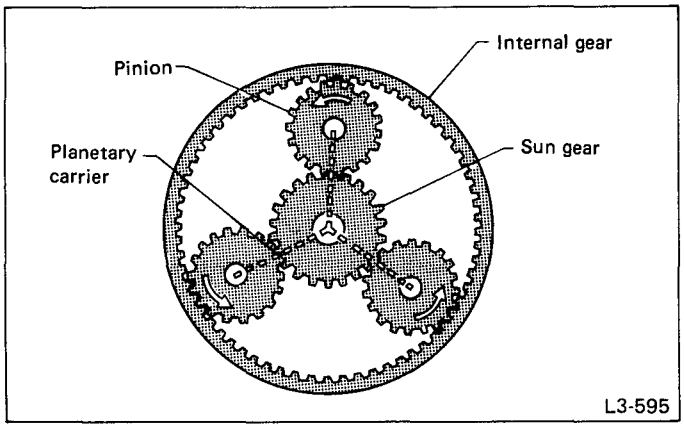

Fig. 15 Planetary gear

The automatic transmission uses a planetary gear system instead of the parallel shaft (two shafts) gear system adopted in the manual transmission.

The advantage of the planetary gear system is that it is compact because it has only one center shaft. The gear ratio can be changed by simply locking or releasing or rotating certain portions, unlike the manual transmission that requires changing gear engagement.

The construction of the planetary gear is shown above. The sun gear is located at the center, and each of the pinion gears revolves around the sun gear while rotating on its axis. These gears are all enclosed in a large ring, called the internal gear. Each pinion gear is supported by a planetary carrier, so that the pinion gears revolve an equal amount in the same direction. As mentioned above, the planetary gear consists of four elements: the sun gear, pinion gears, internal gear, and planetary carrier. The gears are shifted by imposing certain conditions on two of the following three elements: sun gear, internal gear, and planetary carrier.

The clutches and brakes are used to impose the conditions on the planetary gear set.

2) CONSTRUCTION AND FUNCTION OF EACH ELEMENT

(1) Reverse clutch

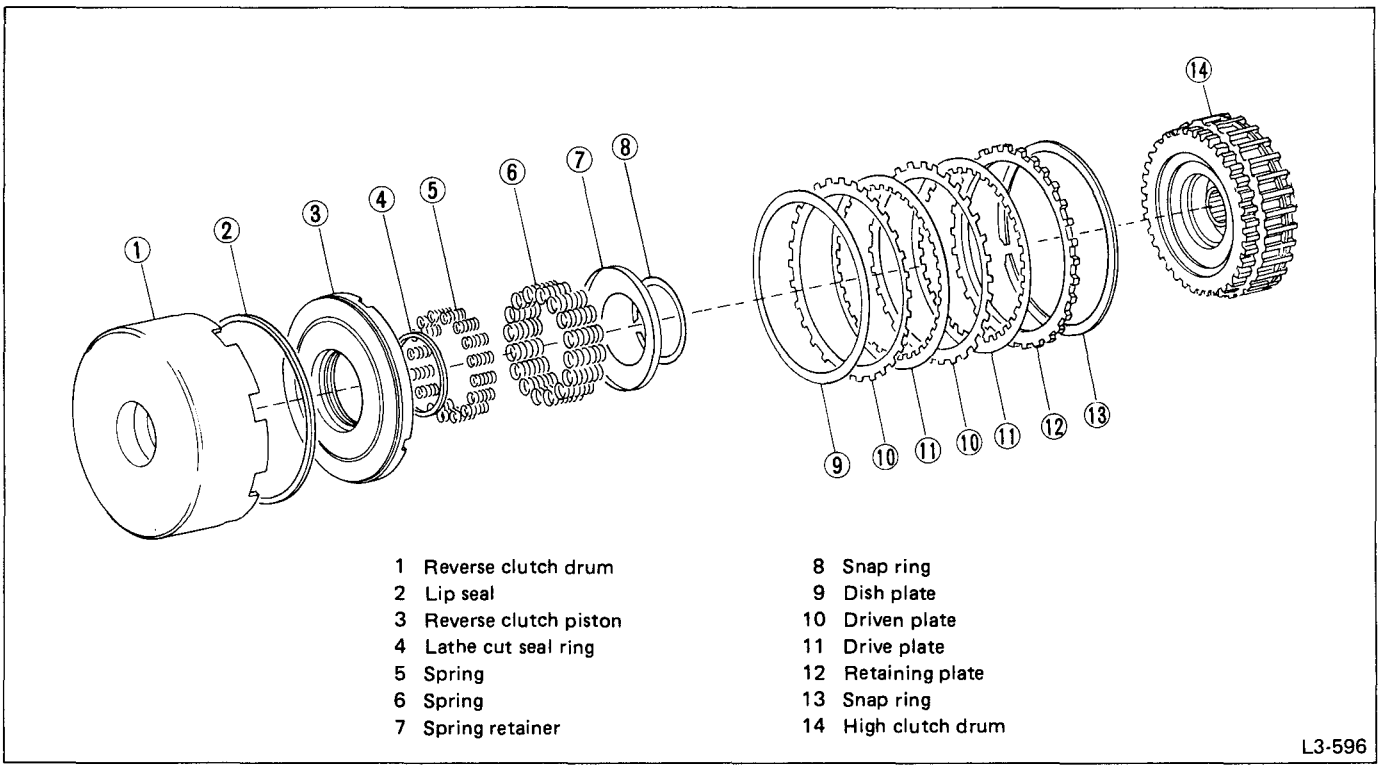

Fig. 16

During operation

Hydraulic pressure is applied to the reverse clutch piston ① from the control valve when shifting in reverse. The drive plate ② and driven plate ③ are connected by this pressure, and engine power from the high clutch drum ④ is transmitted to the front sun gear.

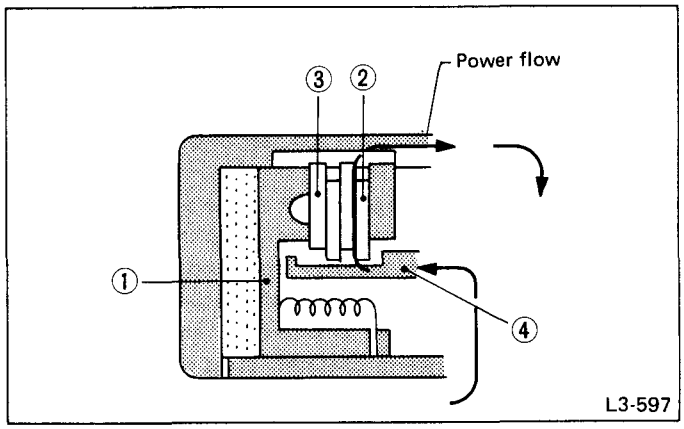

Fig. 17 Operation of reverse clutch

During non-operation

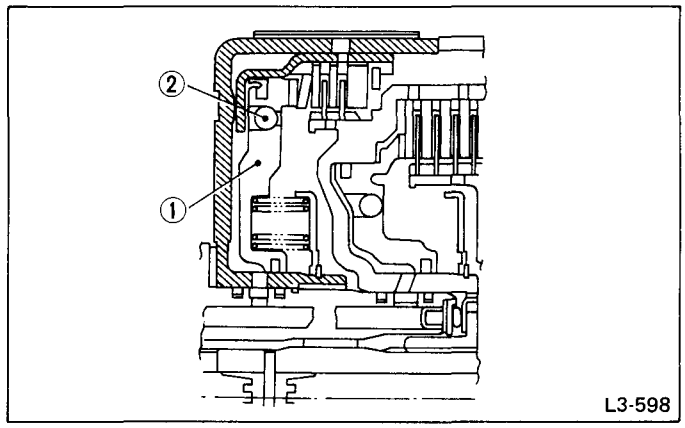

Fig. 18

When the shift lever is in any position other than reverse, no hydraulic pressure is applied to the reverse clutch piston ①. Hence the drive plate and driven plate are separated, and no power is transmitted.

The check ball ② is built into the clutch piston. This check ball releases oil pressure from the clutch piston while the drum rotates idle. It thus avoids buildup of residual pressure in the clutch drum and a resultant half-engaged clutch, which may otherwise be caused by centrifugal oil pressure.

(2) High clutch

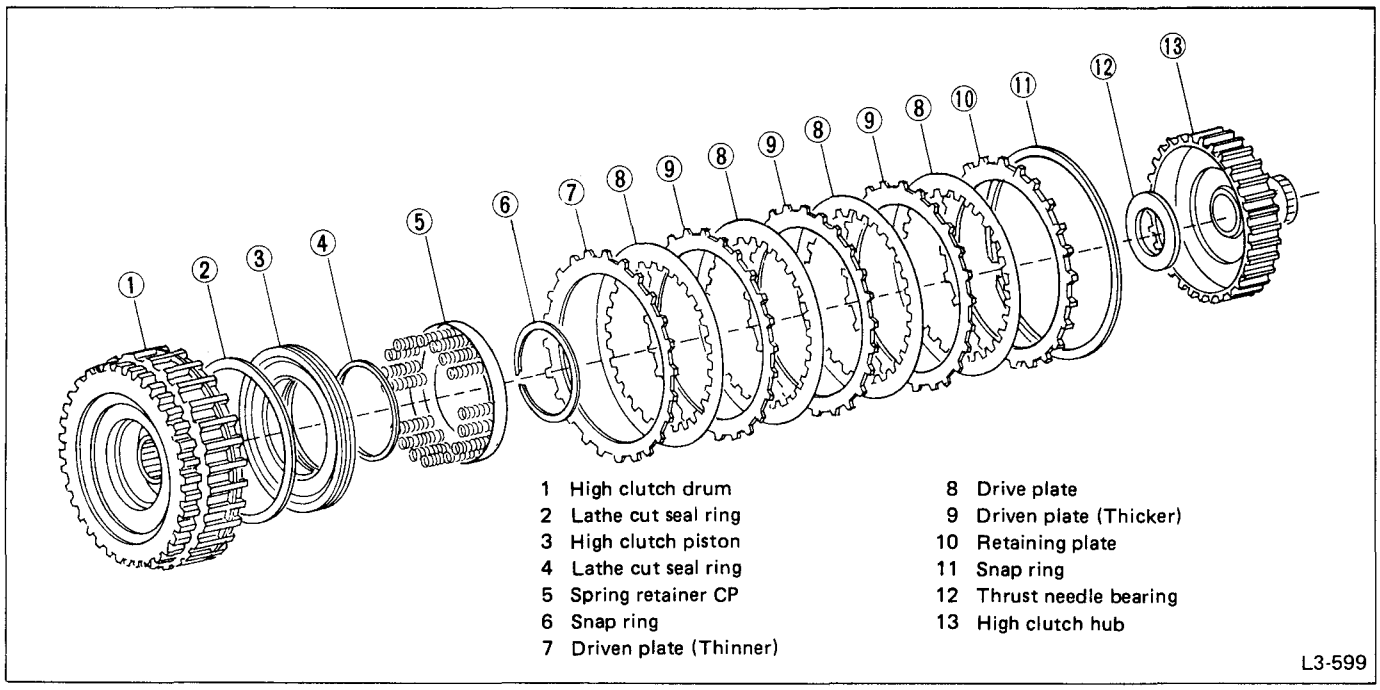

Fig. 19

In 3rd and 4th speed operation, hydraulic pressure is applied to the high clutch from the control valve and another hydraulic pressure controller. The clutch plates (drive and driven plates) are connected by this hydraulic pressure, and engine power from the input shaft is transmitted to the front planetary carrier through the high clutch hub.

(3) Band brake

- **Construction**

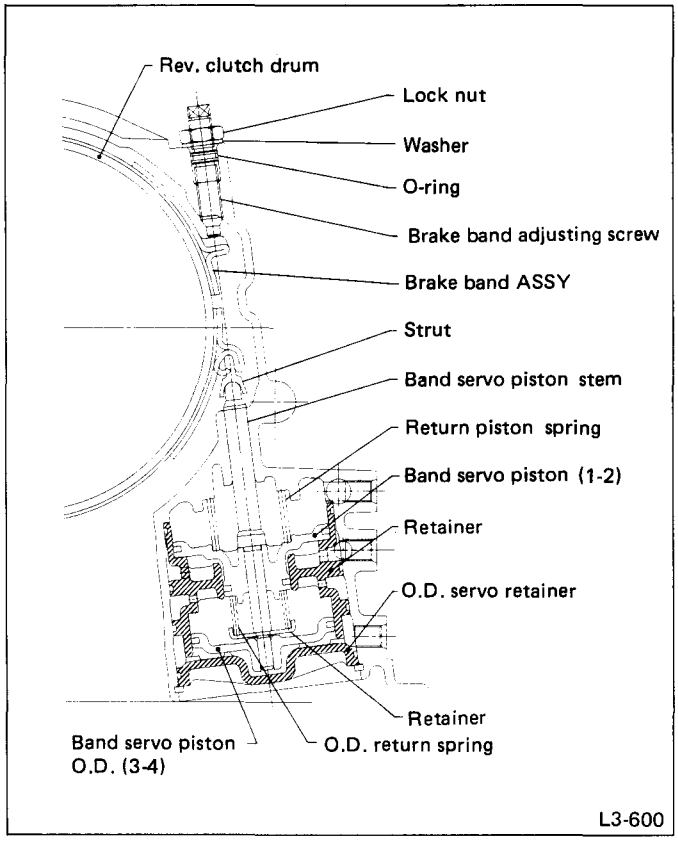

Fig. 20

The band brake consists of a flex type brake band, a band brake adjusting mechanism, two servo pistons, two retainers, two return springs, a stem, a strut, and others. The band brake can be adjusted as installed on the vehicle.

- **Function**

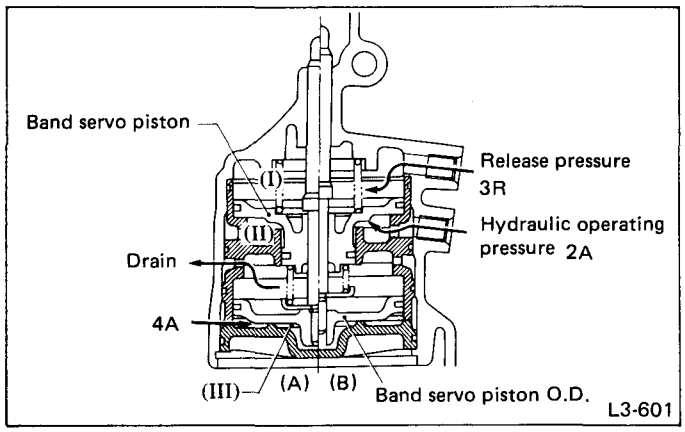

Fig. 21

One end of the brake band is secured to the transmission case via the brake band adjusting screw.

When no hydraulic pressure is applied to the servo piston from the hydraulic pressure controller, the servo piston and band servo piston O.D. are forced downward by the return spring, as shown in (A) of the Figure.

When hydraulic pressure 2A is applied to the servo chamber (II), it causes the band servo piston to come into contact with the stepped portion of the band servo piston stem, thereby pushing the band servo piston stem upward to state (B). Under this condition, the brake band slowly tightens the reverse clutch drum and fixes the front sun gear of the front planetary gear. (2nd speed state)

Next, when the release pressure 3R to the servo chamber (I) and the hydraulic operating pressure 2A to the servo chamber (II) are applied simultaneously, the band servo piston is pushed downward by the force of the return spring and the pressure difference between chamber (I) and chamber (II), caused by the difference in operating areas of the band servo pistons. Under this condition, state (A) is resumed, and the brake band loosens and releases the reverse clutch drum. (3rd speed state)

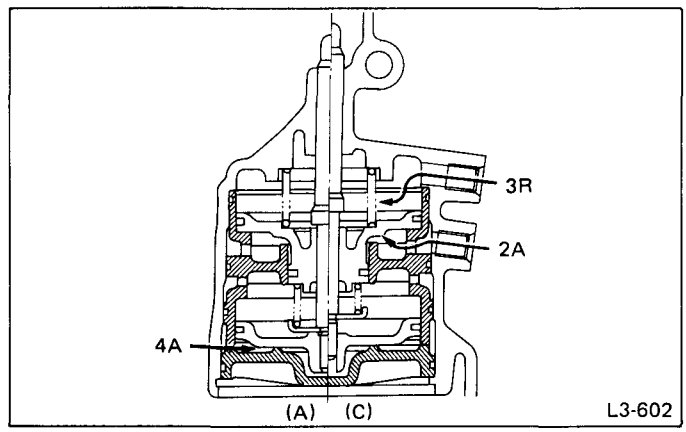

Fig. 22

When hydraulic pressure 4A is applied to the servo chamber (III) under the 3rd speed condition, the band servo piston O.D. is brought into contact with the retainer installed at the lower end of the band servo piston stem. Hence, the stem is pushed upward. As a result, state (C) is achieved where the brake band slowly tightens the reverse clutch drum and fixes the front sun gear of the front planetary gear. (4th speed state)

The accumulator is built into the transmission case as shown in the Figure. When hydraulic pressures 2A, 3R, and 4A are applied from the hydraulic control unit to the respective servo chambers, the hydraulic shock loads are absorbed by the accumulator. This is because the accumulator piston moves slowly, and the brake band is tightened or released slowly. This results in smooth gearshift operation.

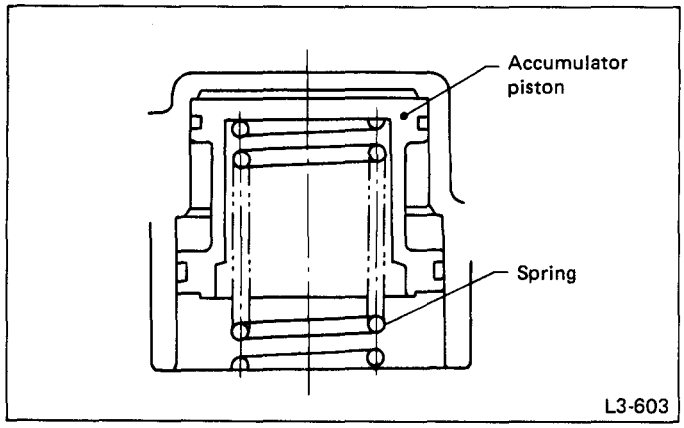

Fig. 23

	Band servo piston (1-2) O.D. mm (in)	Band servo piston (3-4) O.D. mm (in)	Retainer I.D. mm (in)	Return spring (1-2) N (kg, lb)	Return spring (3-4) N (kg, lb)
2700 cc	70 – 30 (2.76 – 1.18)	64 (2.52)	70 – 30 – 64 (2.76 – 1.18 – 2.52)	147 (15, 33) (at setting)	98 (10, 22) (at setting)
1800 cc	64 – 30 (2.52 – 1.18)	57 (2.24)	64 – 30 – 64 (2.52 – 1.18 – 2.52)	147 (15, 33) (at setting)	98 (10, 22) (at setting)

(4) One-way clutch

The one-way clutch (O.W.C.) is a Sprague type. Two clutches are used. One is mounted between the one-way clutch outer race and the rear internal gear ASSY. The other is located between the forward clutch drum and the one-way clutch inner race.

The former O.W.C. (3-4) is provided to prevent counterclockwise rotation (as viewed from the front) of the rear internal gear ASSY of the rear planetary gear during 1st, 2nd and 3rd speeds of the "D" range, "3" range, "2" range and "1st hold". At the 4th speed of the "D" range, therefore, the rear internal gear ASSY rotates clockwise so that the O.W.C. rotates freely to ensure smooth transition between 3rd and 4th speeds.

On the other hand, the latter O.W.C. (1-2) is provided to prevent counterclockwise rotation (as viewed from the front) of the forward clutch ASSY during 1st speed of the "D" range and 1st speed of the "3" range. Therefore, when shifting from 1st speed of the "D" range or "3" range to 2nd speed, the forward clutch ASSY rotates clockwise. As a result, the O.W.C. now rotates freely ensuring smooth transition between 1st and 2nd speeds.

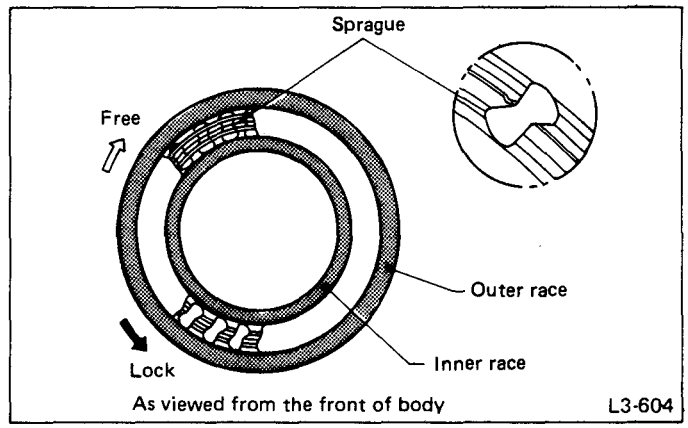

Fig. 24

Item	One-way clutch (1-2)	One-way clutch (3-4)
No. of Sprague	34	28
Width of O.W.C.	10 mm (0.39 in)	15 mm (0.59 in)

(5) Low & reverse brake

- **Construction**

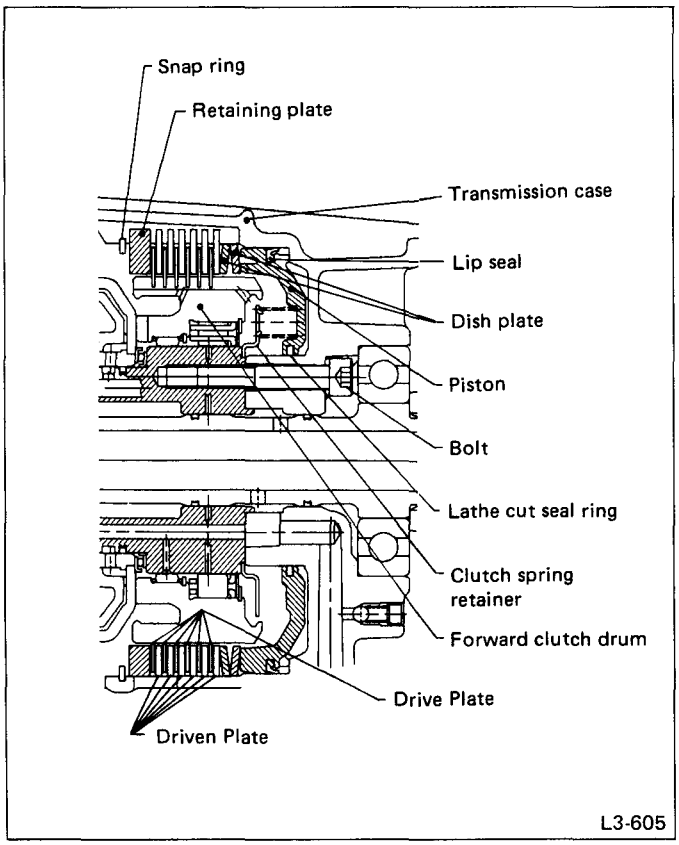

Fig. 25

The piston, dish plate, drive plate, driven plate, retaining plate and snap ring are mounted directly to the transmission case. The spring retainer which is integral with the spring is secured to the inner race of the transmission case engagement surface.

- **Function**

During 1st speed of the "2" range and 1st speed of the "1st hold", and reverse, hydraulic pressure from the hydraulic pressure controller is applied to the low & reverse piston. This pressure causes the drive plate and driven plate to engage, and the forward clutch to be fixed.

		2700 cc	1800 cc
No. of drive plates		6	4
No. of driven plates		6	4
Piston	O.D. mm (in)	148 (5.83)	148 (5.83)
	I.D. mm (in)	73 (2.87)	73 (2.87)

(6) Forward clutch & overrunning clutch

- **Construction**

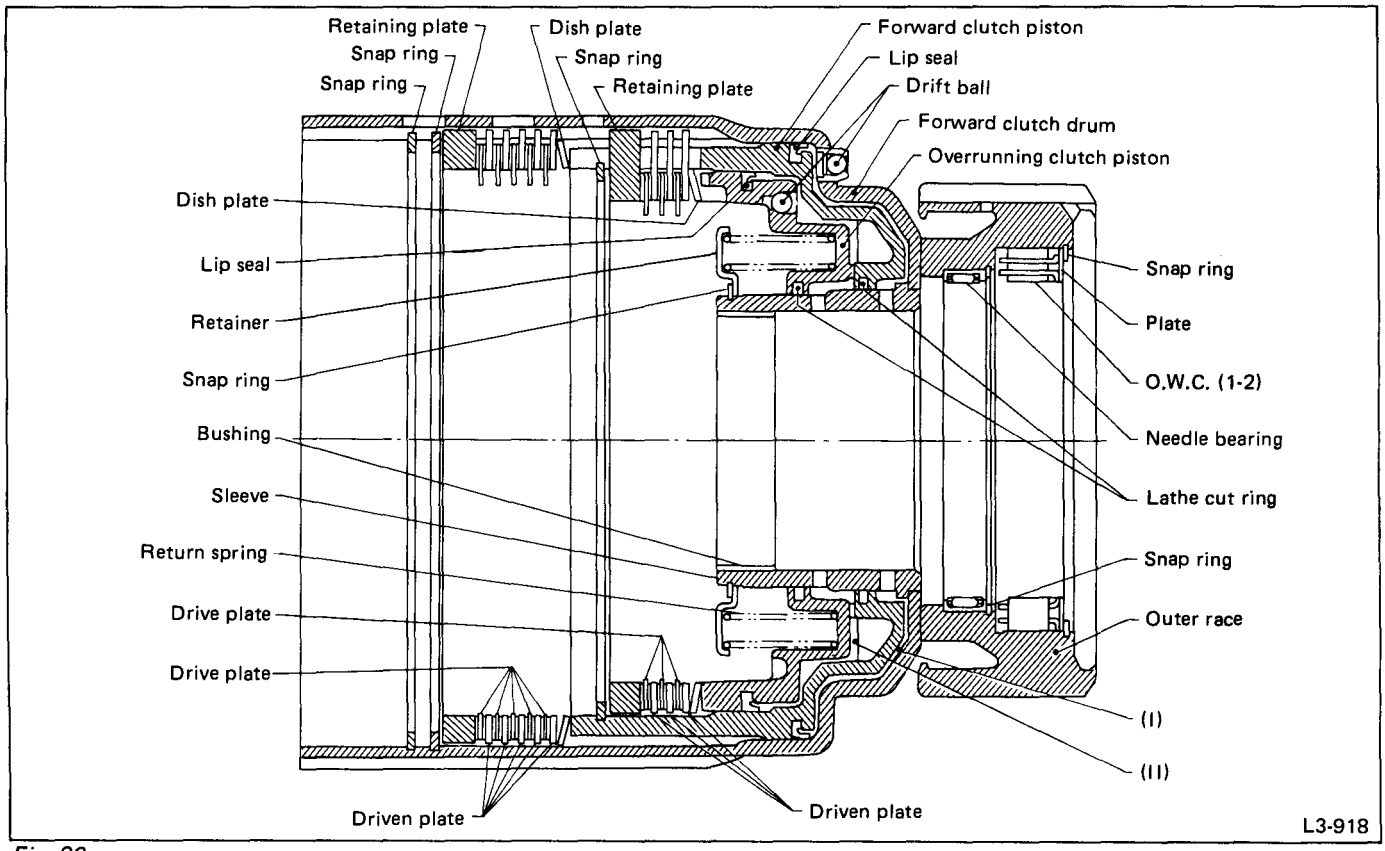

Fig. 26

The forward clutch drum is manufactured by pressing sheet metal. The clutch drum, outer race and sleeve are welded together by the electron beam welding technique. This clutch drum accommodates two multi-plate clutches (forward clutch and overrunning clutch). The overrunning clutch piston is mounted on the internal periphery of the forward clutch piston for common use of the return spring and reduction in size.

		Forward clutch	Overrunning clutch
No. of drive plates		5	3
No. of driven plates		5	3
Piston	O.D. mm (in)	147 (5.79)	133 (5.24)
	I.D. mm (in)	73 (2.87)	75 (2.95)

- **Function**

When hydraulic pressure is applied to the pressure chamber (I) from the hydraulic pressure controller during forward operation in the "D", "3", "2" range or "1st hold", the forward clutch piston forces the overrunning clutch piston. This causes the drive and driven plates of the forward clutch to engage while causing the drive and driven plates of the overrunning clutch to slide forward.

A groove is provided on the outside of the retaining plate and driven plate of the overrunning clutch in which the forward clutch piston slides.

When hydraulic pressure is applied to the pressure chamber (II) from the hydraulic pressure controller during "3" range, "2" range or "1st hold" operation, the forward clutch piston is forced onto the side of the forward clutch drum. The overrunning clutch piston, however, is moved to the left by the hydraulic pressure. This causes the drive and driven plates of the overrunning clutch to engage. When this occurs, the outside splines of the overrunning clutch retaining plate and driven plate fit into the internal spline grooves of the forward clutch. This allows power to be transmitted between the overrunning clutch hub and the forward clutch drum.

(7) Planetary gear

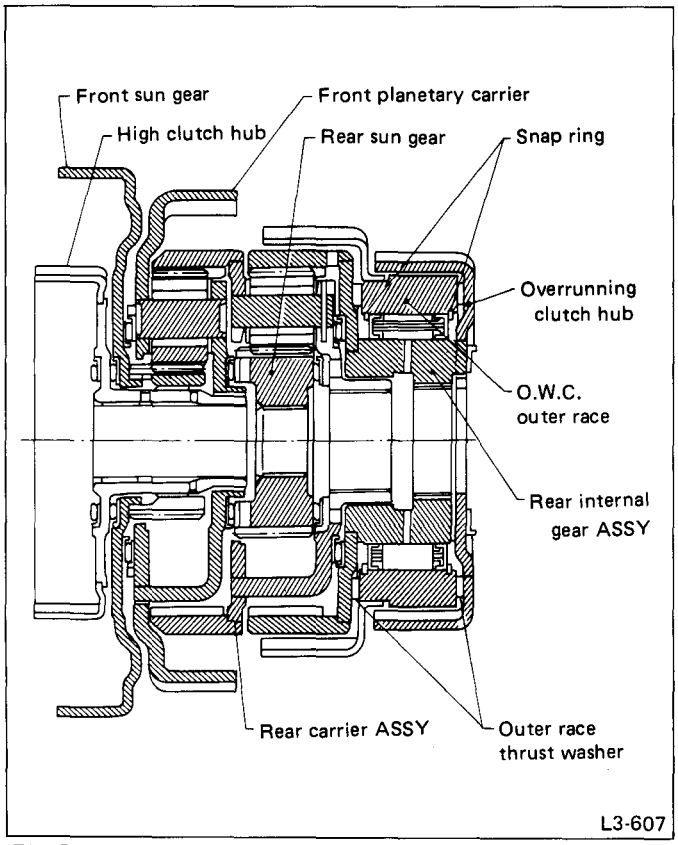

Fig. 27

Two sets of simple planetary gears are used to allow gear shifting from 1st speed to 4th speed or to reverse. Both the front and rear planetary gear carriers are made from pressed steel which is electron-beam welded to other structural members. The front planetary gear has three pinions while the rear planetary gear has four pinions. Both are part of an integral unit, and disassembling is not allowed.

3-4 Input Shaft

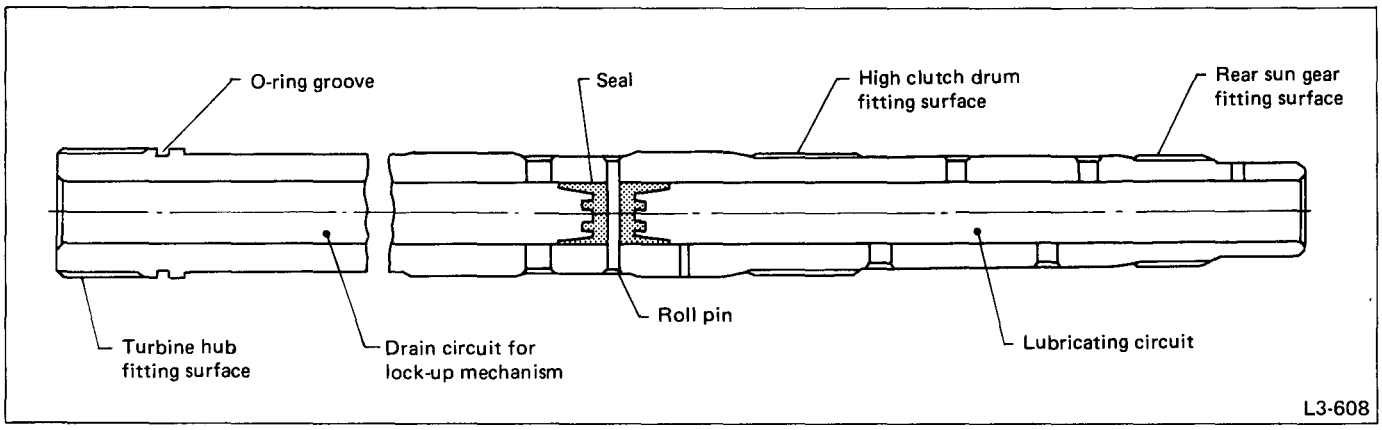

Fig. 28

The input shaft front end is spline-fitted to the torque converter turbine hub. The rear end is spline-fitted to the high clutch drum and rear sun gear. Power from the torque converter is transmitted to the high clutch drum and rear sun gear. The input shaft is hollow. A seal is fitted inside the shaft by a roll pin. The torque converter side of the shaft becomes the drain circuit for the lock-up mechanism. The other side becomes the lubricating circuit for the planetary gears and high clutch.

3-5 Reduction Gear

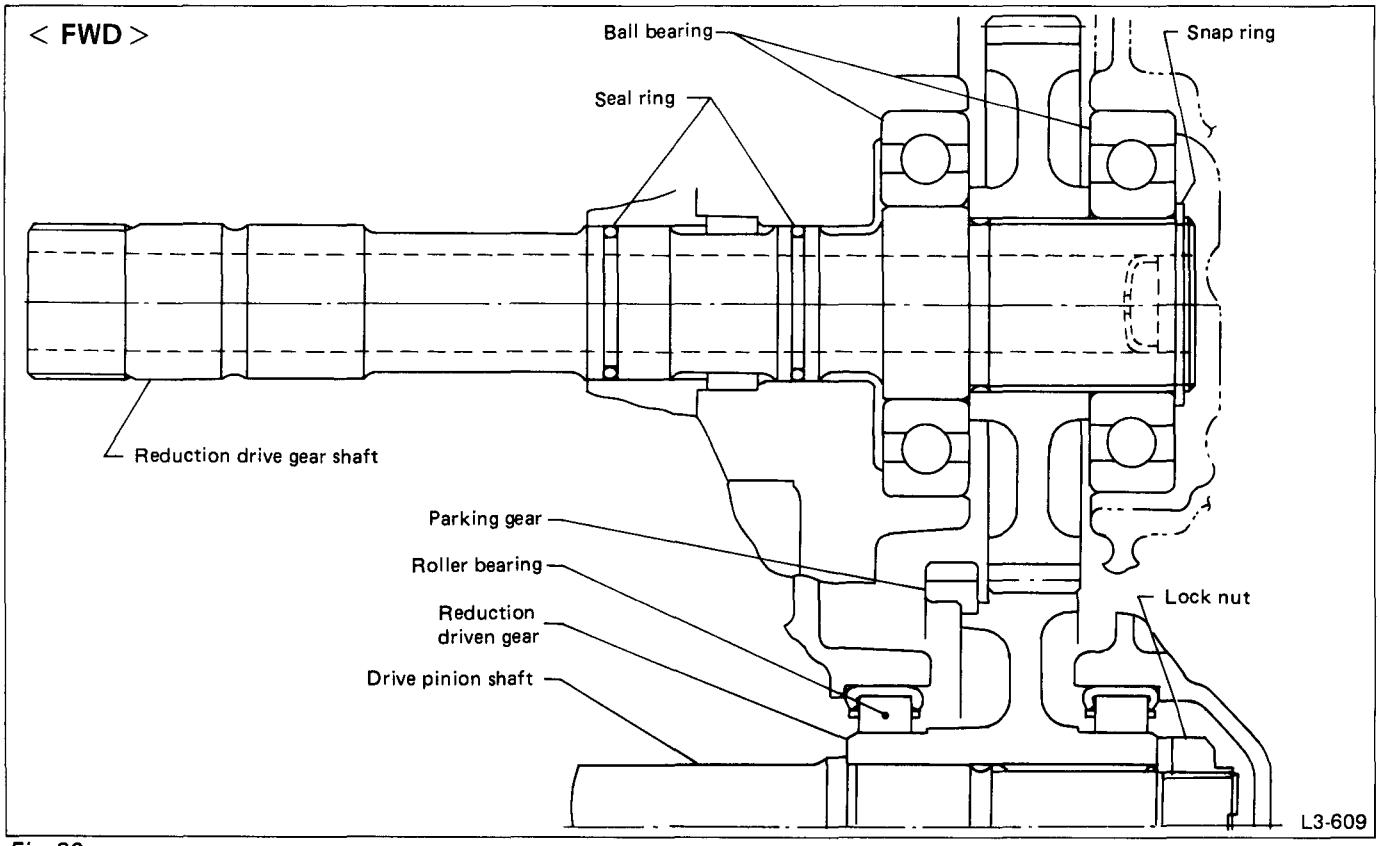

Fig. 29

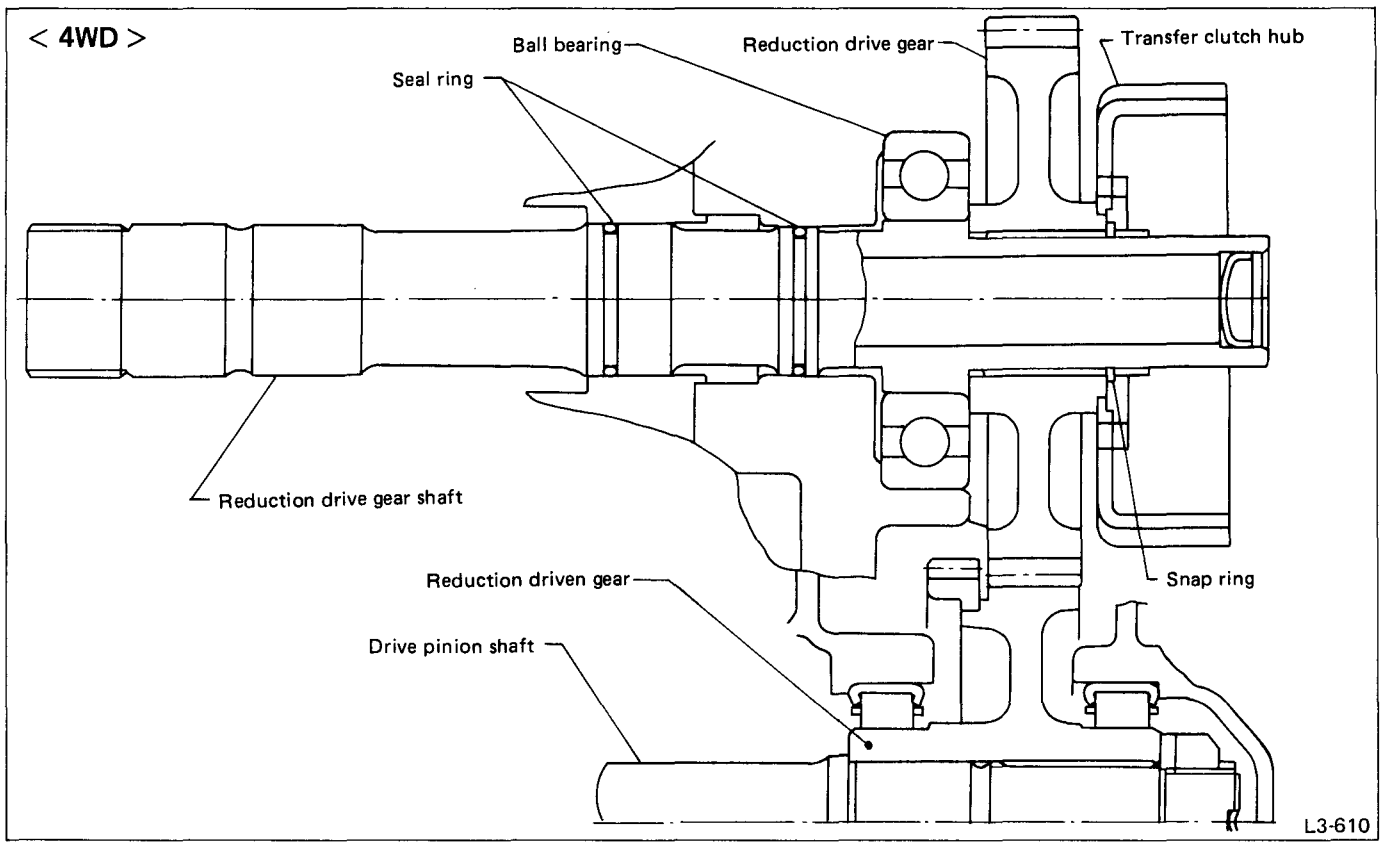

Fig. 30

Engine power is transmitted from the rear planetary carrier to the reduction drive shaft and the reduction drive gear. In a FWD vehicle, power is then transmitted to the final gear through the reduction driven gear and drive pinion. In a 4WD vehicle, power transmission to the front wheels is the same as a FWD vehicle. Power to the rear wheels is transmitted from the transfer clutch hub, welded to the side of the reduction drive gear, and passes through the transfer clutch (multi-plate clutch), to the rear drive shaft → propeller shaft → rear differential → rear wheel.

3-6 Final Reduction Gears

The hypoid drive gear is mounted to the cast iron oil pump housing by double taper roller bearings. The hypoid driven gear and the differential are mounted to the differential case. Both ends rotate and are supported by taper roller bearings in the converter case.

1) HYPOID GEAR

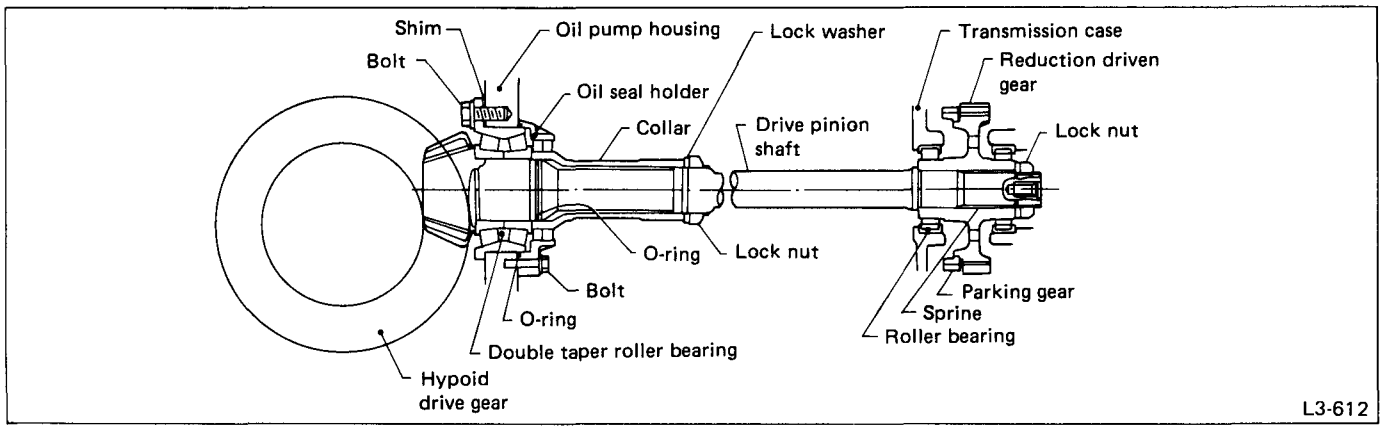

Fig. 31

The front end of the drive pinion shaft is supported by the double-taper roller bearing on the oil pump housing. The rear end is supported by two roller bearings on the transmission case and extension case (rear case for FWD vehicle). The double-taper roller bearing is preloaded by tightening the lock nut to a specified torque via the collar. The tooth contact of the hypoid gear is adjusted by changing the shim thickness between the double-taper roller bearing flange and oil pump housing.

The rear end of the drive pinion shaft is spline-fitted to the reduction driven gear, which is secured with a lock nut. The external helical spline has a length, and the reduction driven gear is force-fitted to this shaft end.

	2700 cc	1800 cc
No. of drive pinion shaft teeth	10	10
No. of hypoid drive gear	37	39
Diameter of hypoid drive gear mm (in)	170 (6.69)	170 (6.69)
Hypoid offset mm (in)	23 (0.91)	23 (0.91)

2) DIFFERENTIAL GEAR

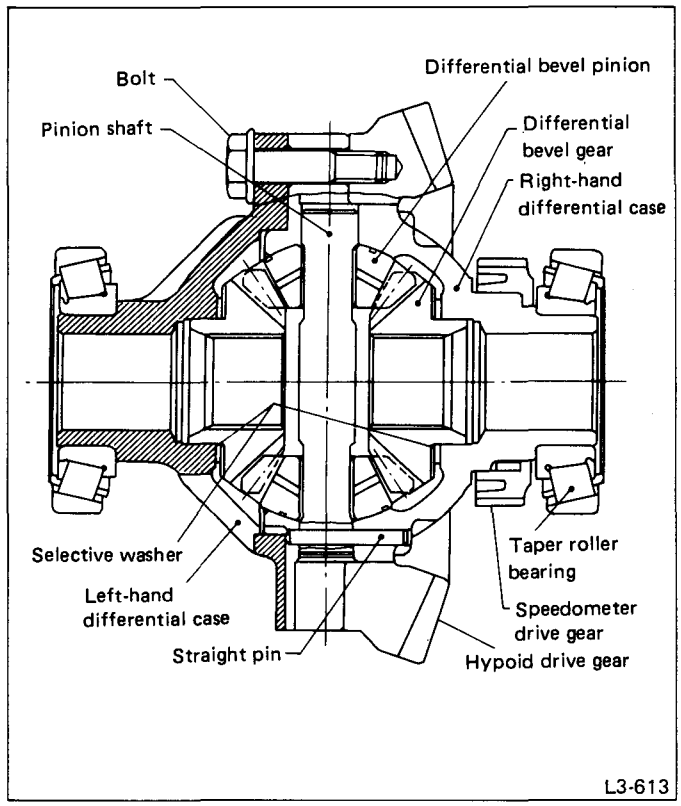

Fig. 32

The differential bevel gear is locked to the axle shaft by a clip.

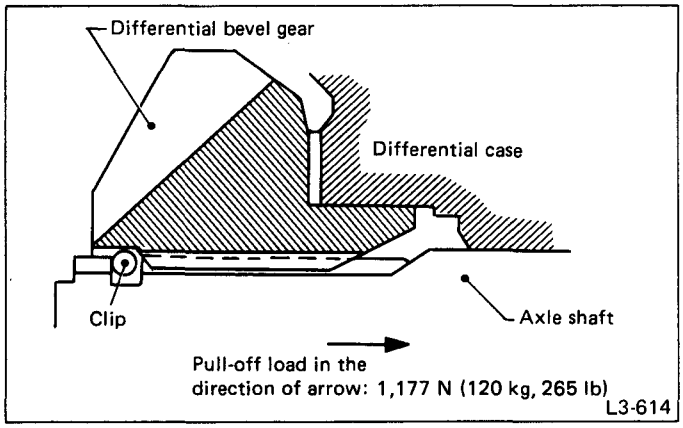

Fig. 33

The speedometer drive gear is mounted directly on the differential case, and the flexible cable is led from the right side of the converter case. With this arrangement, the speedometer drive and driven gears are properly lubricated.

3-7 Hydraulic Control System

The hydraulic control system consists of an oil pump, control valve bodies, clutches, brakes and connecting passages and pipes. When it is activated manually, or automatically by the electronic control system, it hydraulically controls the gear-shifting mechanism.

3) SPEEDOMETER GEAR SYSTEM

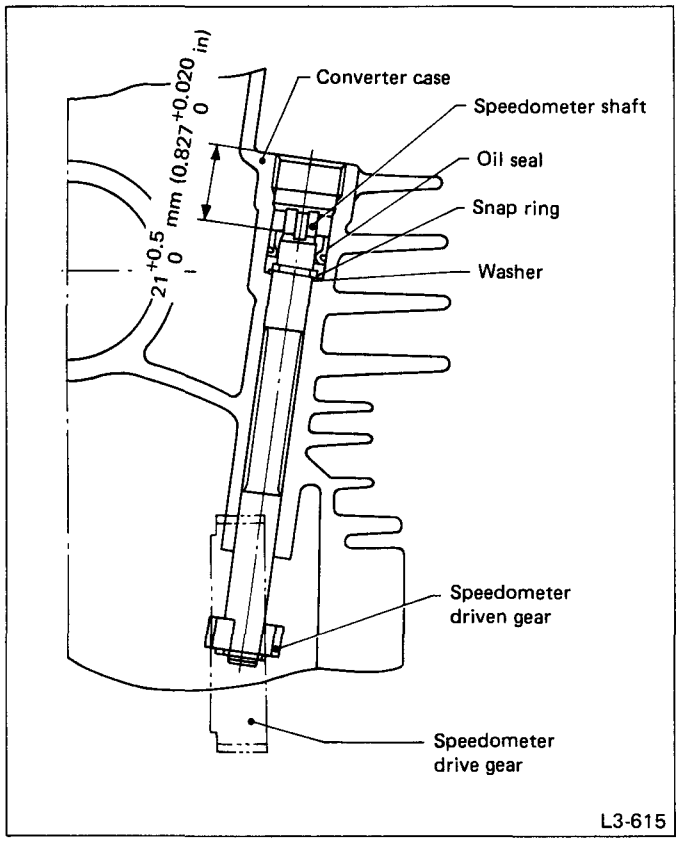

Fig. 34

1) CONSTRUCTION OF CONTROL VALVE

(1) Overall

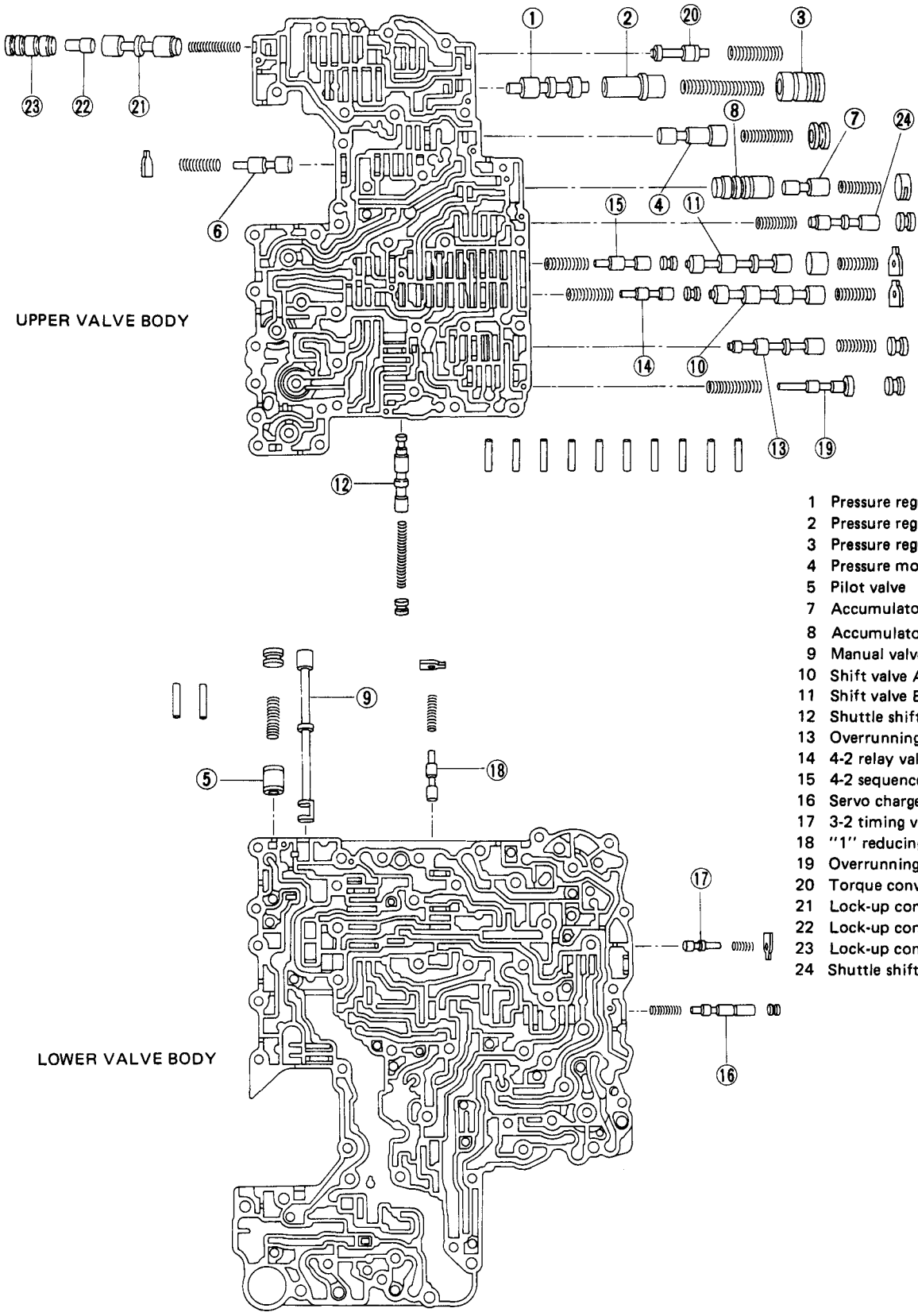

1 Pressure regulator valve
2 Pressure regulator plug
3 Pressure regulator sleeve plug
4 Pressure modifier valve
5 Pilot valve
7 Accumulator control plug
8 Accumulator control sleeve
9 Manual valve
10 Shift valve A
11 Shift valve B
12 Shuttle shift valve B
13 Overrunning clutch control valve
14 4-2 relay valve
15 4-2 sequence valve
16 Servo charger valve
17 3-2 timing valve
18 "1" reducing valve
19 Overrunning clutch reducing valve
20 Torque converter relief valve
21 Lock-up control valve
22 Lock-up control plug
23 Lock-up control sleeve
24 Shuttle shift valve D

Fig. 35 L3-919

(2) Valve Body Configuration

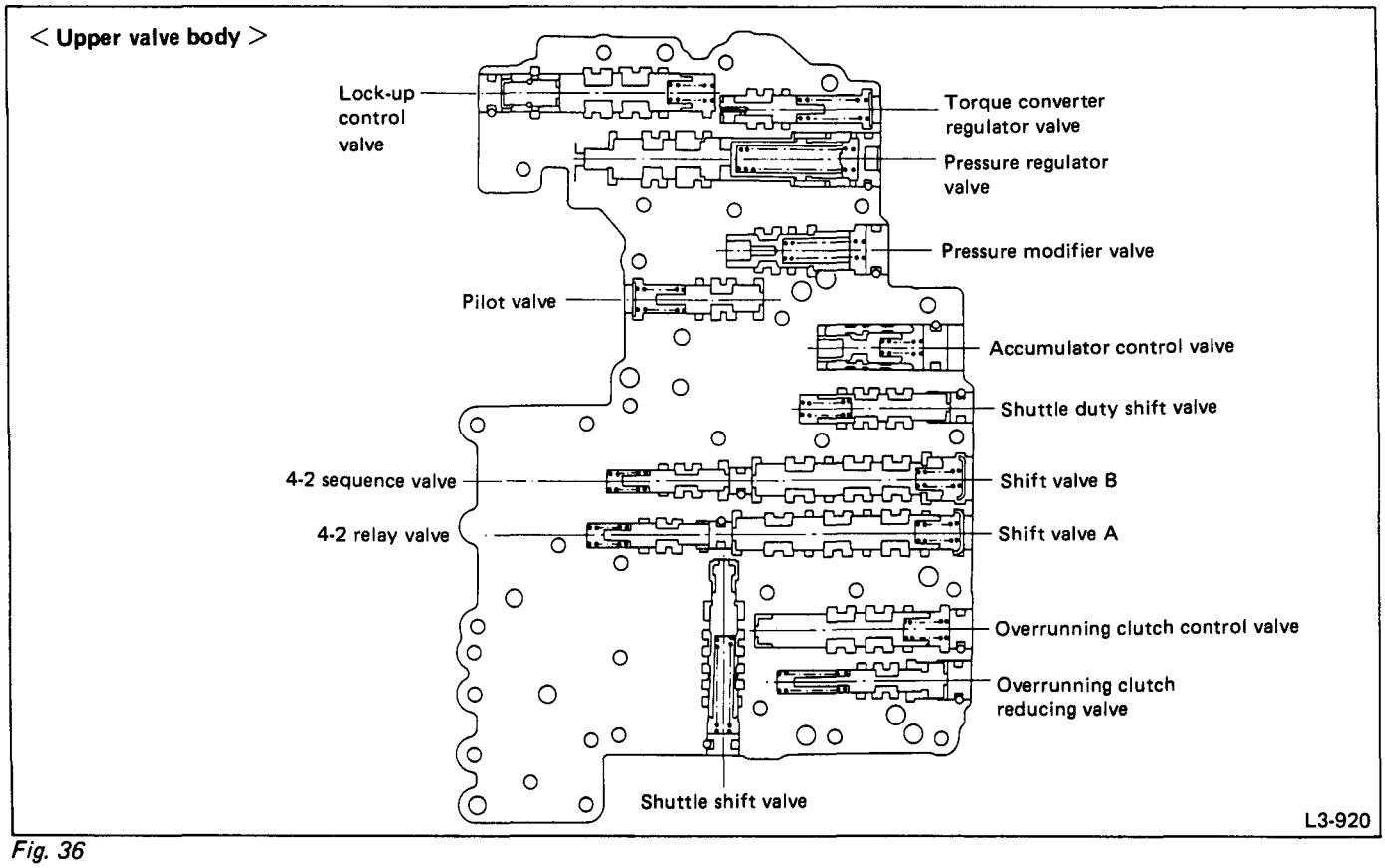

Fig. 36

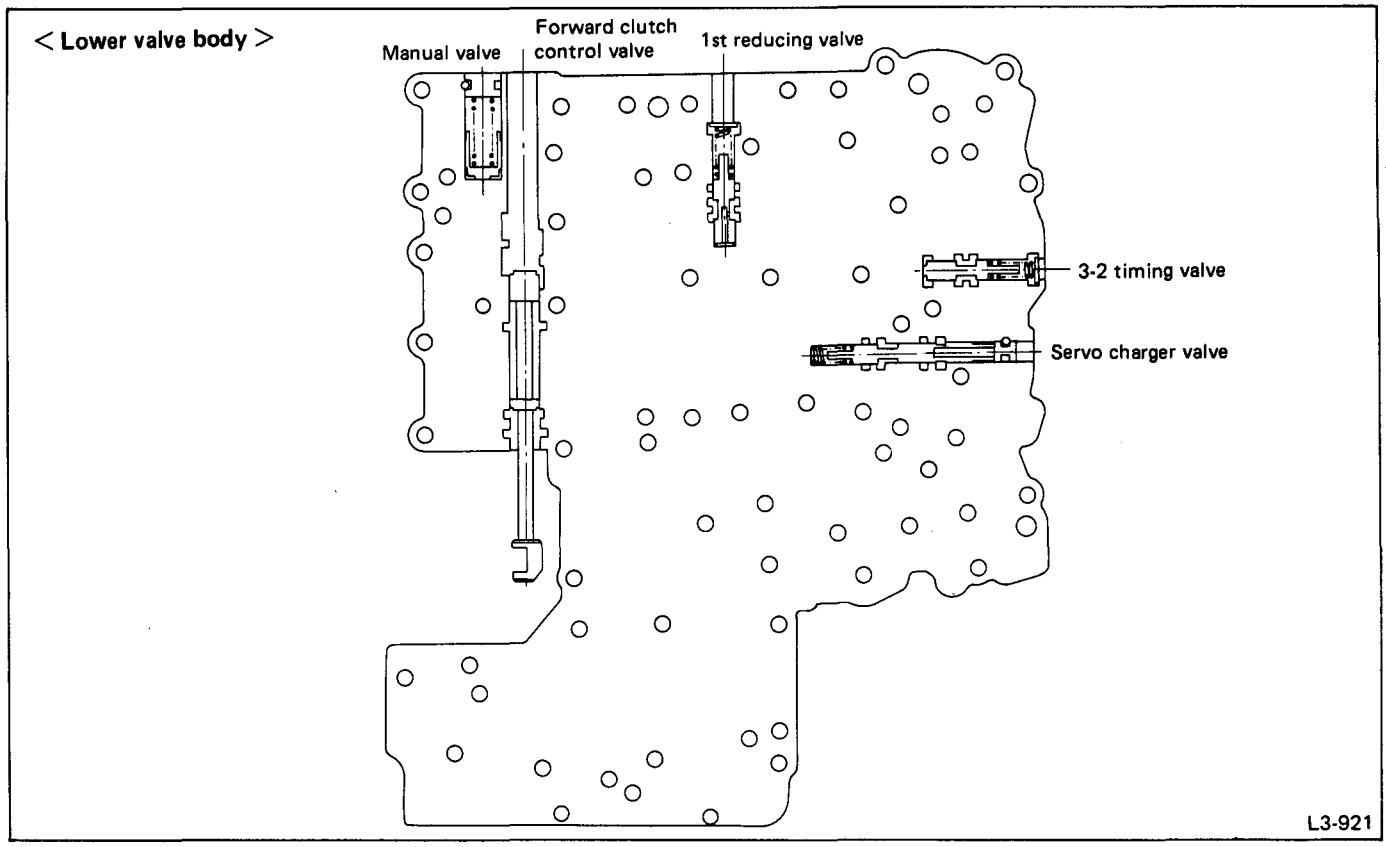

Fig. 37

(3) Related Parts (1)

The control valve body is fitted with Solenoid 1 (shift), Solenoid 2 (shift), Solenoid 3 (overrunning clutch), Duty solenoid A (line pressure), Duty solenoid B (lock-up) and an ATF temperature sensor.

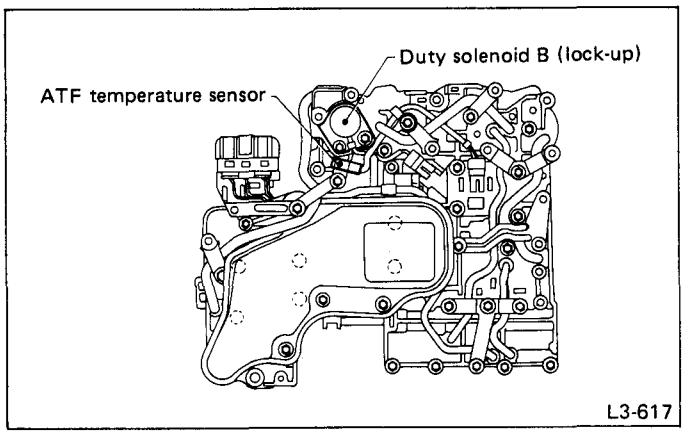

Fig. 38 Lower surface of control valve

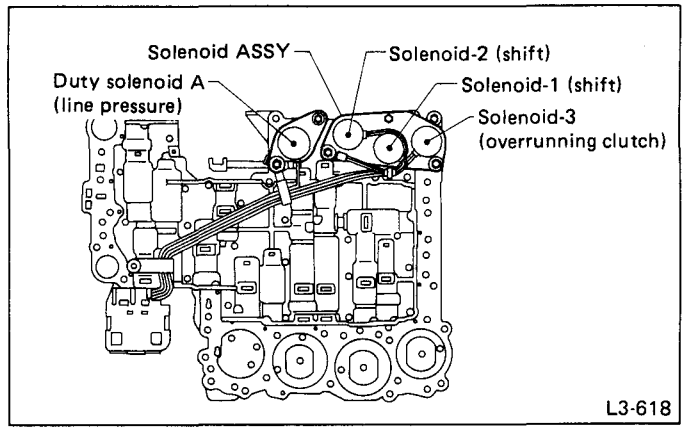

Fig. 39 Upper surface of control valve

(4) Related Parts (2)

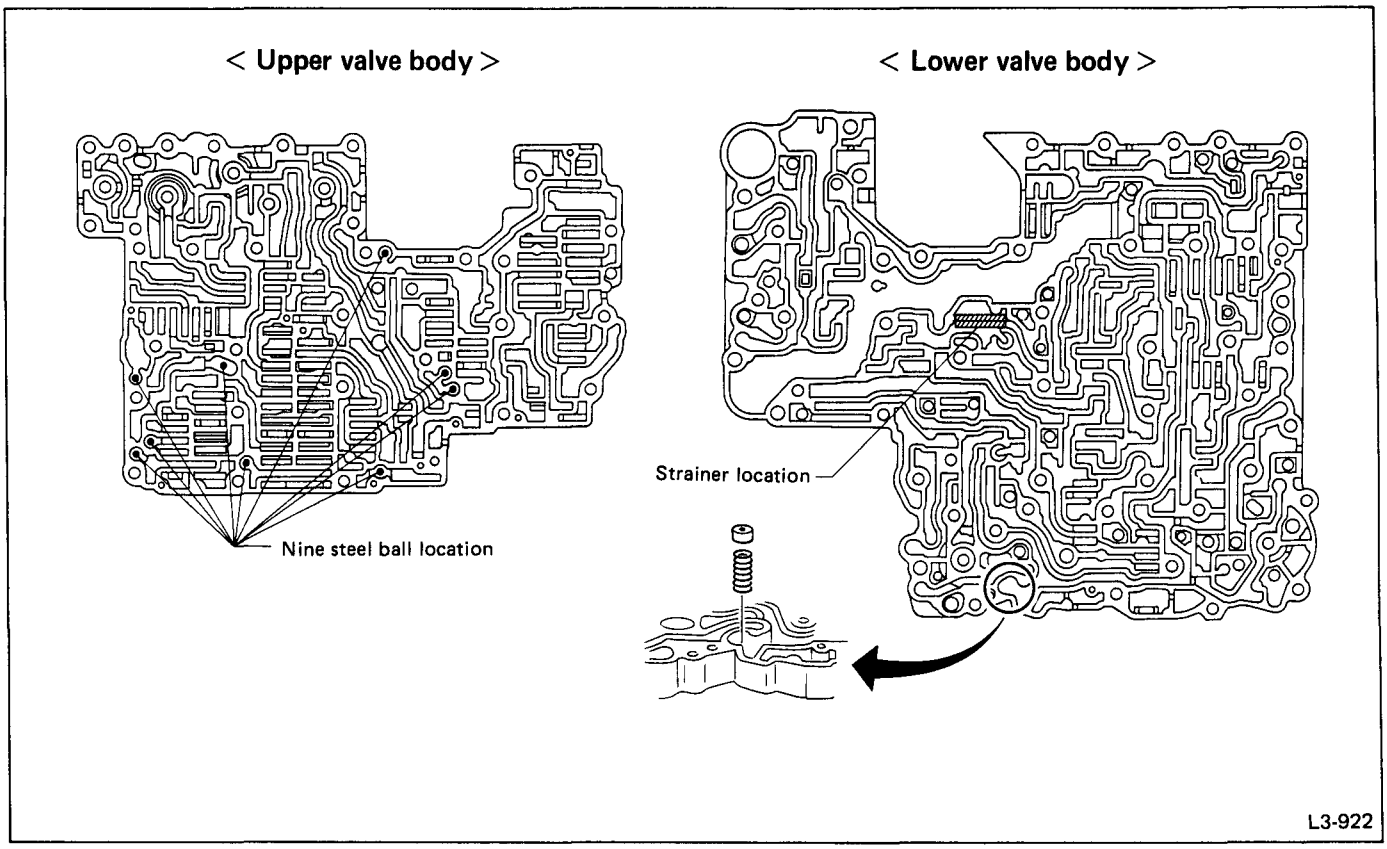

Fig. 40

(5) Related Parts (3)

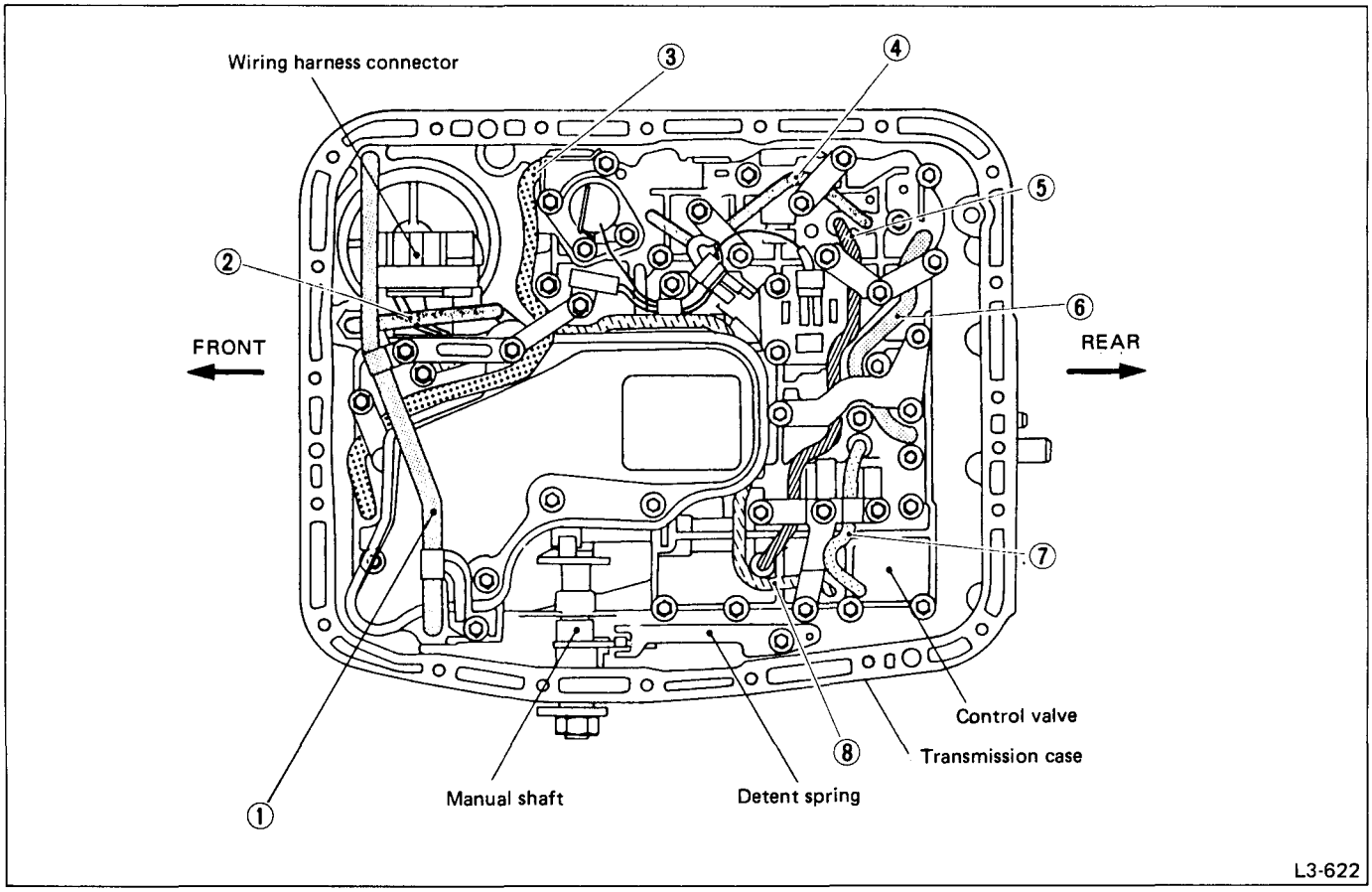

Fig. 41

< Pipe names >

No.	Description	Hydraulic circuit
①	Oil cooler outlet pipe	Cooling line from control valve to oil cooler inside radiator
②	Transfer control pipe	Line-pressure supply line to transfer control valve
③	Reverse clutch pressure pipe	Accumulator circuit of reverse clutch pressure
④	4A pressure pipe	4A pressure circuit
⑤	3R pressure pipe	3A pressure circuit
⑥	Forward clutch pressure pipe	Supply line to N → D accumulator
⑦	Pilot pressure pipe	Pilot pressure supply line to shuttle shift valve S
⑧	Pressure-modifier pressure pipe	Supply line to pressure modifier accumulator

2) FUNCTION OF EACH VALVE

<table>
<tr><th>Name</th><th>Function</th></tr>
<tr><td>• Pressure regulator valve
• Pressure regulator plug
• Pressure regulator sleeve plug</td><td>Regulates the pressure of oil delivered from the oil pump to an optimum level (line pressure) corresponding to vehicle running conditions.</td></tr>
<tr><td>Pressure modifier valve</td><td>An auxiliary valve for the pressure regulator valve. This valve adjusts pressure used to regulate line pressure to an optimum level corresponding to running conditions.</td></tr>
<tr><td>Pressure modifier accumulator piston</td><td>Smoothes the pressure regulated by the pressure modifier valve to prevent pulsation in line pressure.</td></tr>
<tr><td>Pilot valve</td><td>Creates the constant pressure (pilot pressure) necessary to control line pressure, lock-up, overrunning clutch, 3-2 timing, and gearshift operations from line pressure.</td></tr>
<tr><td>• Accumulator control plug
• Accumulator control sleeve</td><td>Adjusts accumulator back pressure to correspond to running conditions.</td></tr>
<tr><td>Manual valve</td><td>Delivers line pressure to each circuit corresponding to the selected position.
<table>
<tr><th>Circuit / Range</th><th>①</th><th>②</th><th>③</th></tr>
<tr><td>P</td><td></td><td></td><td></td></tr>
<tr><td>R</td><td></td><td></td><td>○</td></tr>
<tr><td>N</td><td></td><td></td><td></td></tr>
<tr><td>D</td><td>○</td><td></td><td></td></tr>
<tr><td>3</td><td>○</td><td></td><td></td></tr>
<tr><td>2</td><td>○</td><td>○</td><td></td></tr>
</table>
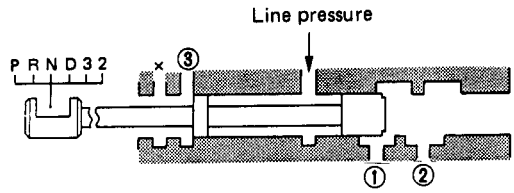

Fig. 42 L3-924
When the valve is set in the "line pressure no delivery" position, the pressure is relieved.</td></tr>
<tr><td>Shift valve A</td><td>Simultaneously changes three different oil passages using shift solenoid 1 output pressure corresponding to such operating conditions as vehicle speed and throttle opening. Combined with shift valve B, this valve permits automatic shifting of 1st ⇄ 2nd ⇄ 3rd ⇉ 4th speeds.</td></tr>
<tr><td>Shift valve B</td><td>Simultaneously changes three different oil passages using shift solenoid 2 output pressure corresponding to such operating conditions as vehicle speed and throttle opening. Combined with shift valve A, this valve permits automatic shifting of 1st ⇄ 2nd ⇄ 3rd ⇇ 4th speeds.</td></tr>
<tr><td>Shuttle shift valve S</td><td>Changes the 3-2 timing control and overrunning clutch control oil passages corresponding to the throttle opening. When the throttle is wide open, the overrunning clutch becomes inoperative to prevent interlocking at 4th speed.</td></tr>
<tr><td>Overrunning clutch control valve</td><td>Changes oil passages so as to prevent simultaneous operation of the overrunning clutch when the brake band is actuated at 4th speed. (Operation of overrunning clutch at D4 speed results in interlocking.)</td></tr>
</table>

Name	Function
4-2 relay valve	Memorizes the 4th speed position, and prevents gear shifting from 4th to 3rd to 2nd speeds due to combined operation of the 4-2 sequence valve, shift valve A and shift valve B when shifting down from 4th to 2nd speeds.
4-2 sequence valve	Inhibits release of band servo operating pressure acting at 4th speed until the high clutch operating pressure and band servo release pressure (same hydraulic circuit) are drained when shifting down from 4th speed to 2nd speed.
Servo charger valve	The 2nd speed band servo actuating hydraulic circuit has an accumulator and one-way orifice for relieving shift shock when shifting from 1st speed to 2nd speed. The servo charger valve is installed to ensure sufficient oil flow when shifting down from 4th to 2nd speed, or from 3rd to 2nd speed. It operates at 3rd or higher speeds and supplies the 2nd speed band servo actuating pressure by bypassing the one-way orifice.
3-2 timing valve	When shifting down from D 3rd to D 2nd speed, the timing valve retards the release of band-servo pressure and creates a temporary neutral condition so that vehicle speed can be changed smoothly.
"1" Reducing valve	Reduces the low & reverse brake operating pressure so as to relieve engine braking shock when changing from "2" range 2nd speed to 1st speed.
Overrunning clutch reducing valve	Reduces the operating pressure applied to the overrunning clutch so as to relieve engine braking shock. In the "2" and "3" ranges, line pressure is applied to the valve to raise the pressure adjusting point, thereby increasing engine braking capacity.
Torque converter regulator valve	Prevents excessive rise of torque converter pressure.
• Lock-up control valve • Lock-up control plug • Lock-up control sleeve	Controls the operation of the lock-up function. Smoothes the transition between the lock-up state and release state.
Shuttle shift valve D	Changes the oil passage so that output pressure to the duty solenoid B (lock-up) will be applied to the lock-up valve in the "D" range 2nd, 3rd, or 4th speed. (Lock-up at 1st speed is inhibited.) at 1st speed is inhibited.) * Lock-up control is not actuated if the lock-up solenoid does not generate output pressure when signaled from the control unit, even if the vehicle is in the "D" range 2nd, 3rd, or 4th speeds.

3) OPERATION OF EACH VALVE

(1) Pressure Regulator Valve

In the regulator valve, force "F_L" generated by oil pump pressure (line pressure) acts to the right, while force "F_{MF}" generated by the pressure modifier pressure, force "$F_{R/C}$" and spring force "Fs" act to the left.
If F_L becomes larger than $F_{MF} + F_{R/C} + Fs$, the valve moves toward the right, and passage ① communicates with passage ②. Hydraulic pressure is then applied to the control piston of the oil pump, decreasing the oil pump discharge pressure. As a result, oil pump pressure is adjusted to maintain an equilibrium between F_L and $F_{MF} + F_{R/C} + Fs$.
With this valve, the discharge pressure of the oil pump is adjusted to an optimum pressure (line pressure) corresponding to the running conditions of the vehicle, so that oil pump driving energy loss is reduced and gearshift shock is relieved.

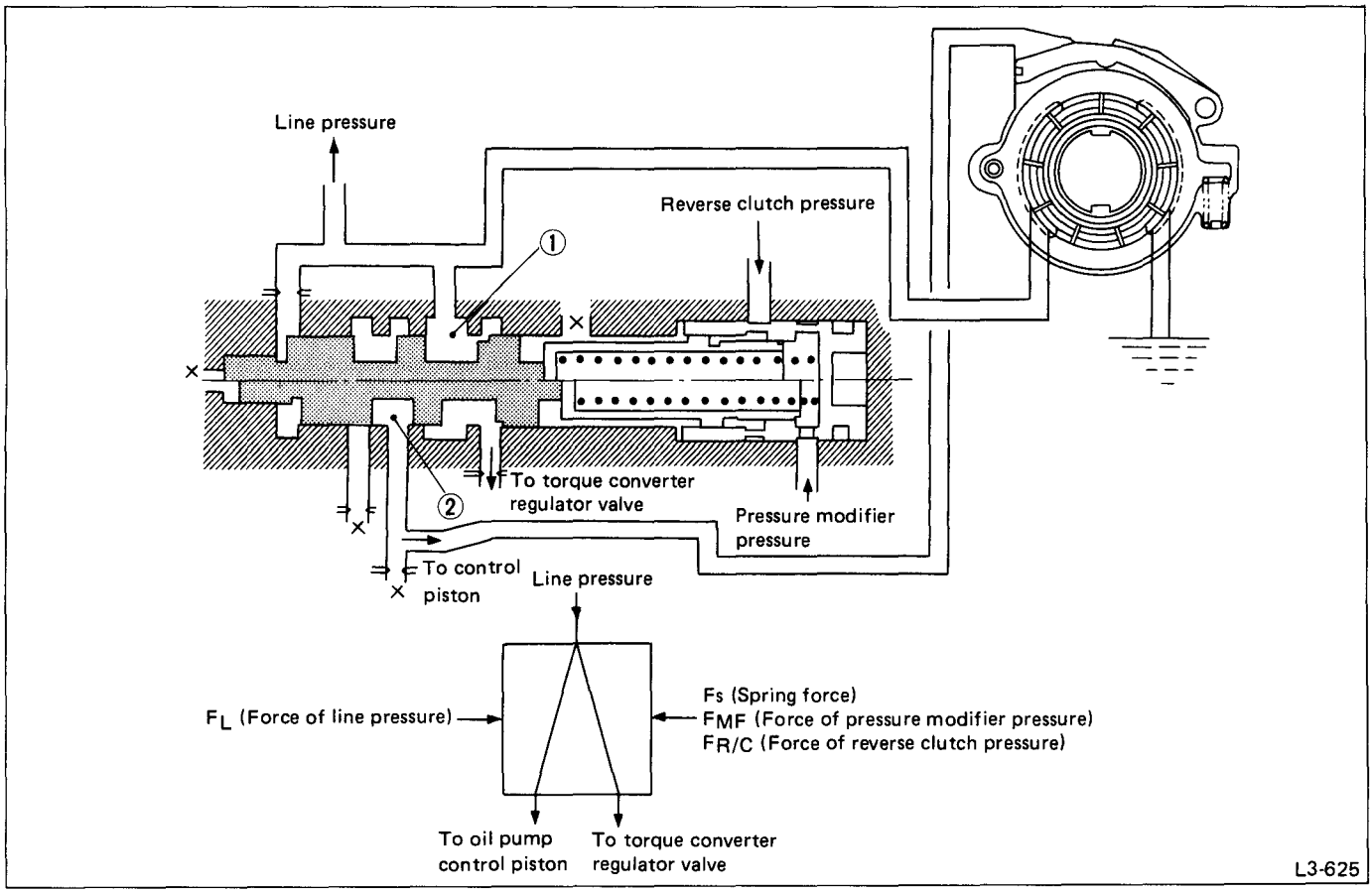

Fig. 43

(2) Torque Converter Regulator Valve

Torque converter pressure is applied to the valve as a force pushing the valve to the right. If the force generated by torque converter pressure becomes greater than the spring force, the valve moves toward the right, and torque converter pressure is relieved. Accordingly, torque converter pressure will not exceed the set pressure 686 kPa (7 kg/cm^2, 100 psi).

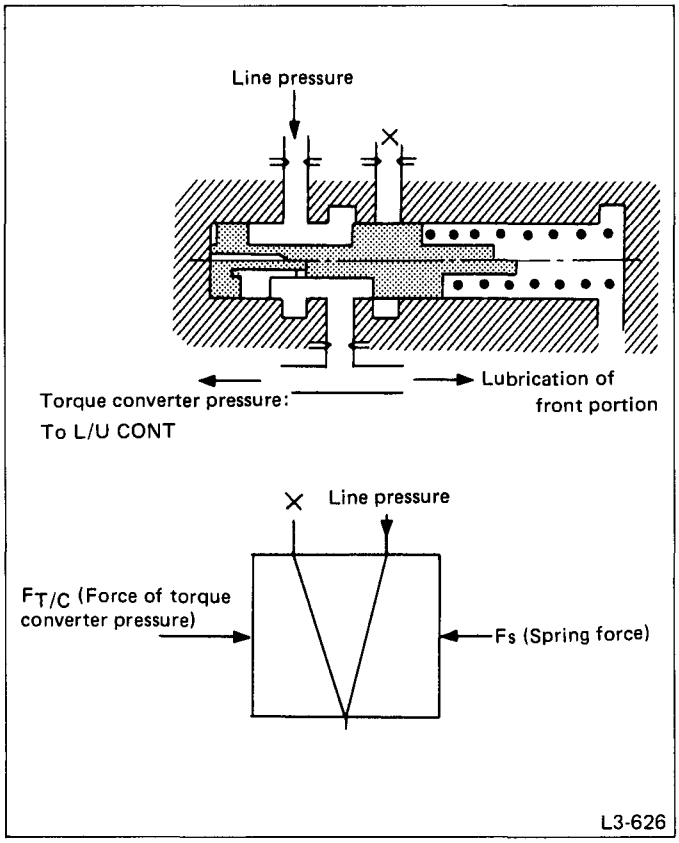

Fig. 44

(3) Pressure Modifier Valve

The force of the P_L duty pressure, which is pulse-width modulated by the line pressure duty solenoid, and spring pressure push the valve to the right. Meanwhile, oil entering through the oil passage ① passes through the orifice and enters the chamber ②, pushing the valve to the left. The pilot pressure entering from passage ③ to chamber ④ also pushes the valve to the left. Accordingly, oil pressure from the passage ① is regulated to obtain equilibrium in the valve. This is the pressure modifier pressure.

This pressure modifier valve serves as a pilot valve for the pressure regulator valve. It is used to create the pilot pressure needed to regulate line pressure to an optimum level corresponding to the driving conditions of the vehicle.

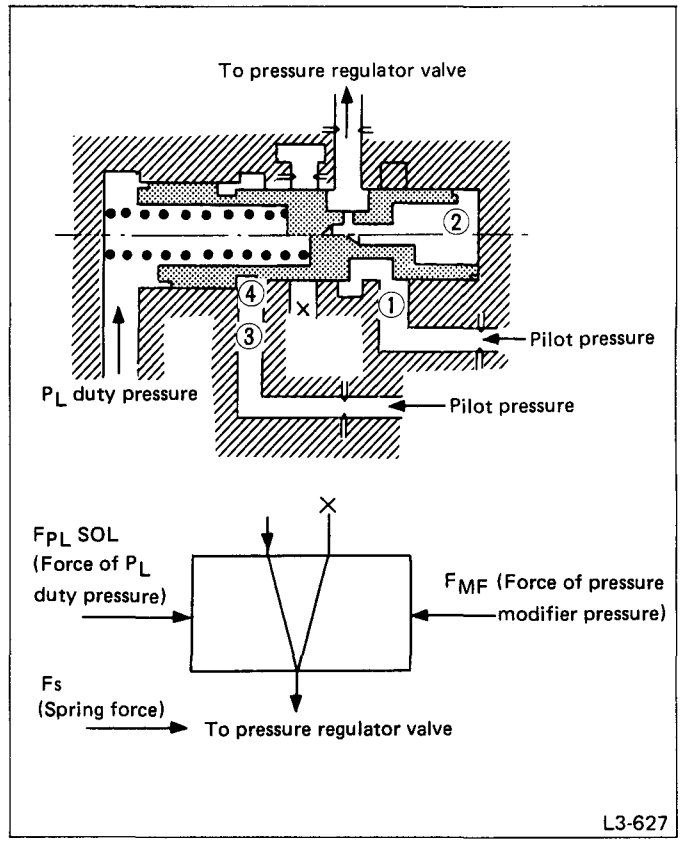

Fig. 45

(4) Accumulator Control Valve

The force of the P_L duty pressure, which is pulse-width-modulated by the line pressure duty solenoid and the spring force push the valve to the right. Meanwhile, the force of the oil coming from the oil passage ① into the chamber ② pushes the valve to the left. The oil pressure from passage ① is adjusted to maintain an equilibrium of forces in the valve, and this pressure is used as the accumulator back pressure.

This valve adjusts accumulator back pressure corresponding to running conditions, thereby reducing gearshift shock.

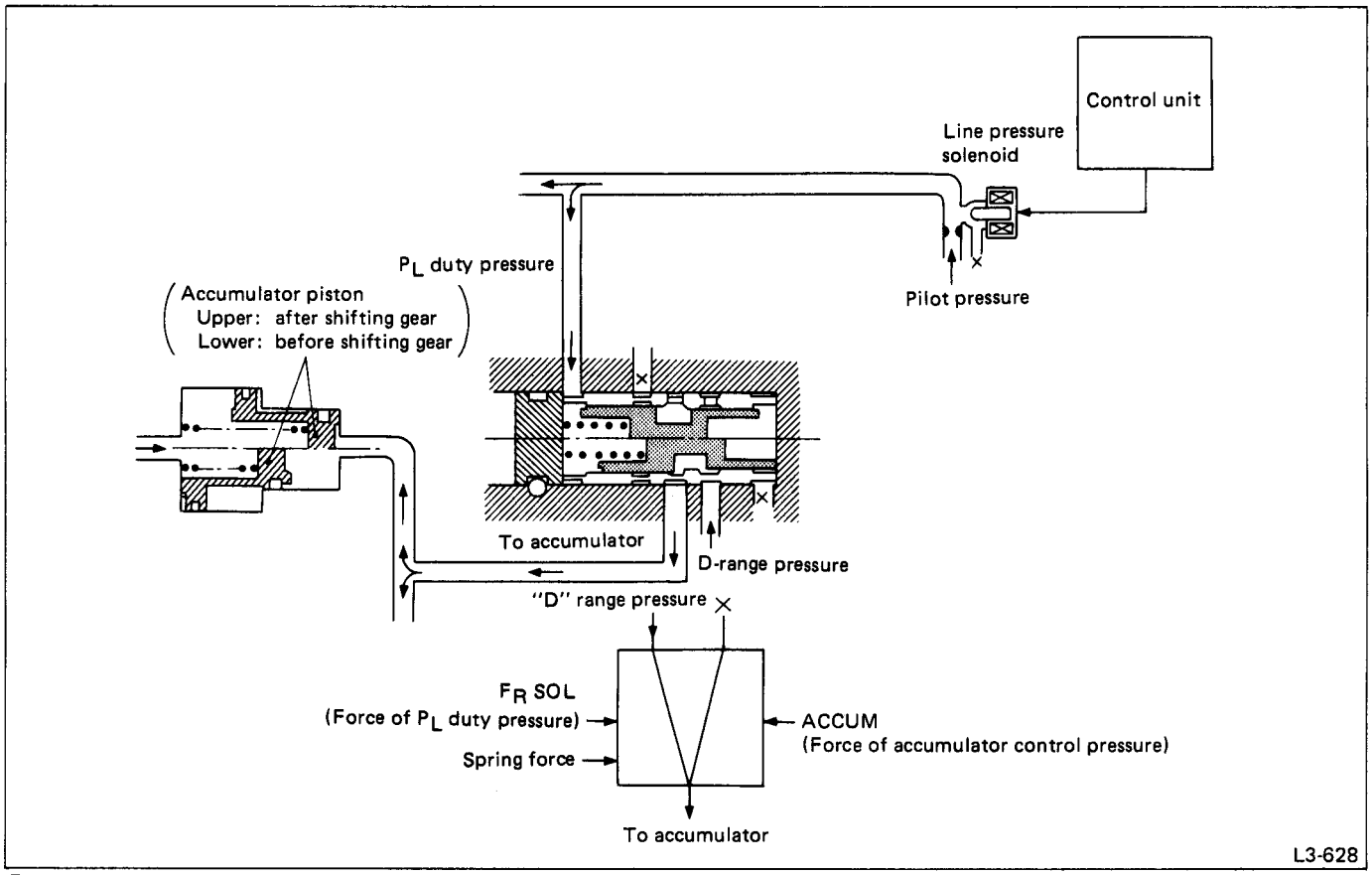

Fig. 46

(5) Shuttle Shift Valve D

The 2A pressure pushes the valve to the right, while the spring force pushes the valve to the left.

- In 1st speed, and in "N", "R", or "P" range:
  The shuttle shift valve is in condition (b). The pilot pressure flows to the lock-up control valve and keeps the torque converter lock-up clutch in the unlocked position (i.e., the condition of torque converter coupling).
- In 2nd, 3rd, or 4th speed:
  The shuttle shift valve D is in condition (a). The lock-up duty pressure is routed to the lock-up control valve, and keeps the torque converter in the lock-up (direct-connection) position.

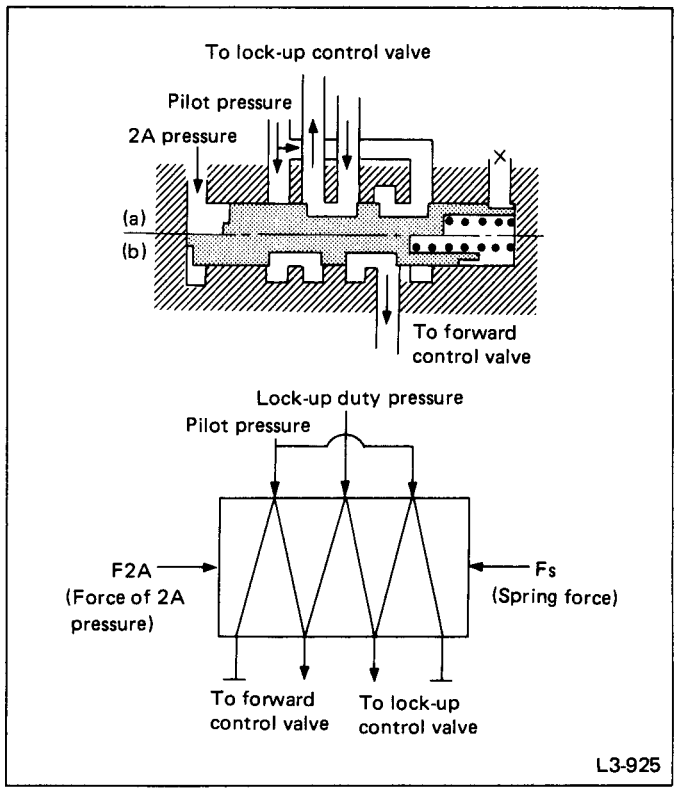

Fig. 47

(6) Shift Valve B and 4-2 Sequence Valve

Shift valve B

The shift solenoid 2 pressure pushes shift valve B to the left, while spring force pushes the valve to the right.

- In 1st or 2nd speed: Shift solenoid pressure is ON.
  Shift valve B is in condition (a). When "2" range 1st speed or hold range 1st speed is selected, the oil from passage ① flows to the low & reverse brake from passage ② via shift valve A.

  When shifting down from 4th to 2nd, the 4-2 relay pressure oil flows from the passage ⑤. It then flows to the 4-2 sequence valve via passage ⑥.
- In 3rd or 4th speed: Shift solenoid 2 pressure is OFF.
  Because no shift solenoid 2 pressure is generated, the valve remains in condition (b), and oil pressure from passage ④ serves as the operating pressure for 3R and H/C via passage ③.

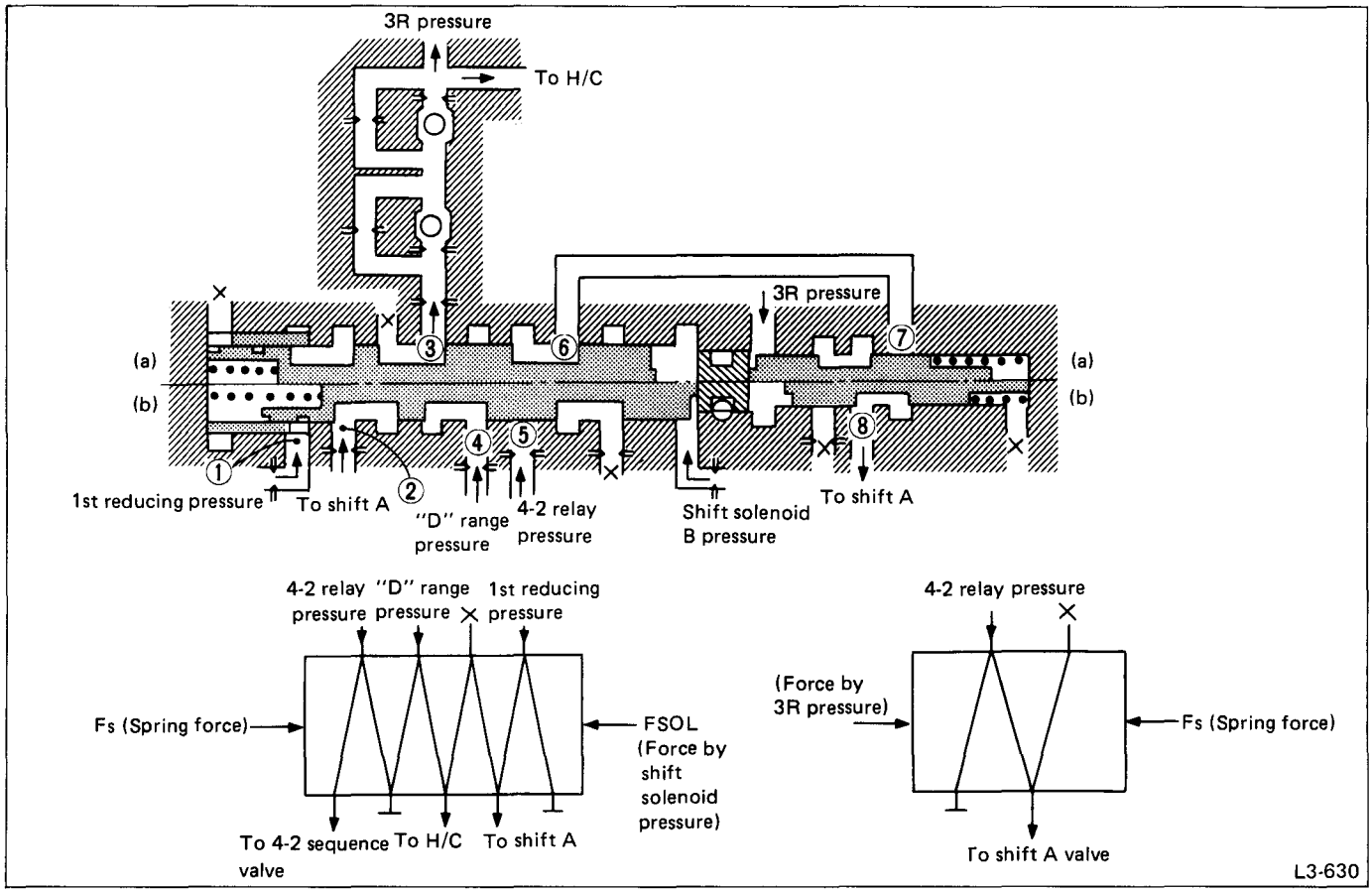

Fig. 48

4-2 sequence valve

The 3R pressure pushes the valve to the right, while the spring force pushes the valve to the left. (When shifting down from 4th to 2nd.)

The valve remains in condition (b) as long as 3R pressure exists. In this condition, the 4-2 relay pressure (line pressure) flows from passage ⑦. It then flows to shift valve A from passage ⑧.

(7) Shift Valve A and 4-2 Relay Valve

Shift valve A

The pressure from the solenoid 1 pushes the valve to the left, while spring force pushes the valve to the right.

- In 2nd or 3rd speed: Shift solenoid 1 pressure is OFF. The valve is in condition (a). Oil pressure from passage ⑤ is applied to the servo 2A chamber from oil passage ④.
- In 4th to 2nd shift down: Oil from oil passage ⑧ is applied to the servo 4A chamber and 4-2 relay valve through passage ⑦ if 3R 4A pressure exists.
- In 1st or 4th speed: Shift solenoid 1 pressure is ON. The valve is in condition (D). In F2 range 1st speed, or hold range 1st speed, oil from passage ① is applied to the L&R/B from oil passage ②. In 4th speed position, oil pressure from passage ⑥ is applied to the servo 4A chamber through oil passage ⑦.

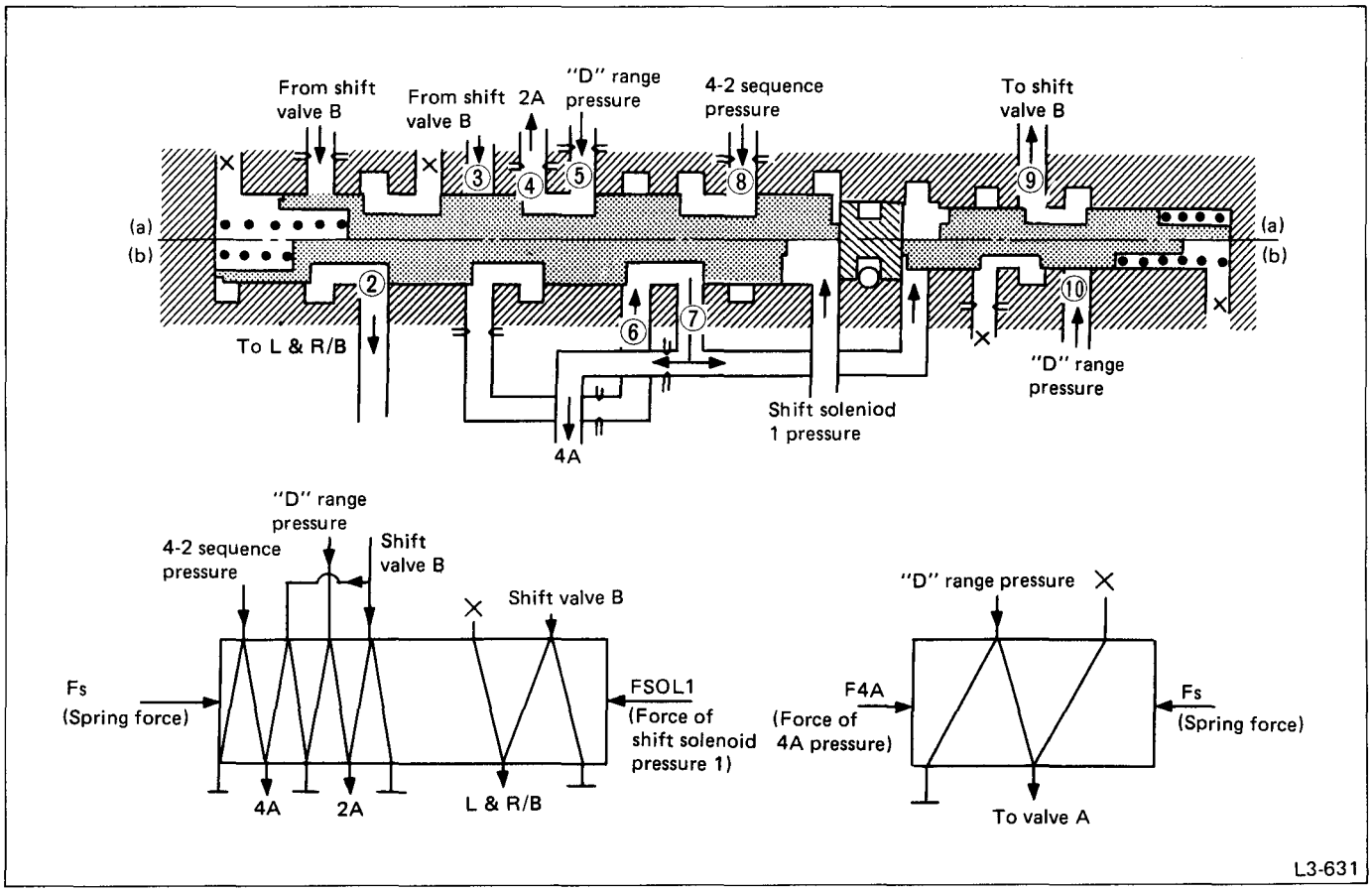

Fig. 49

4-2 relay valves

The force generated by 4A pressure pushes the valve to the left, while the spring force pushes the valve to the right. When shifting from 4th to 2nd, status (a) is attained if 4A pressure exists. Oil from passage ⑩ is routed to the 4-2 sequence valve via shift valve B from oil passage ⑨.

(8) Overrunning Clutch Control Valve

During coasting, no oil flows into passage ⑤, and the valve is set to condition (b) by spring force. Oil from passage ④ exerts pressure on the overrunning clutch via the overrunning clutch reducing valve from passage ③.

Under conditions other than coasting, oil flows into passage ⑤, and the valve is set in condition (a). In 4th speed, the oil from passage ① exerts pressure on the servo 4A chamber via passage ②.

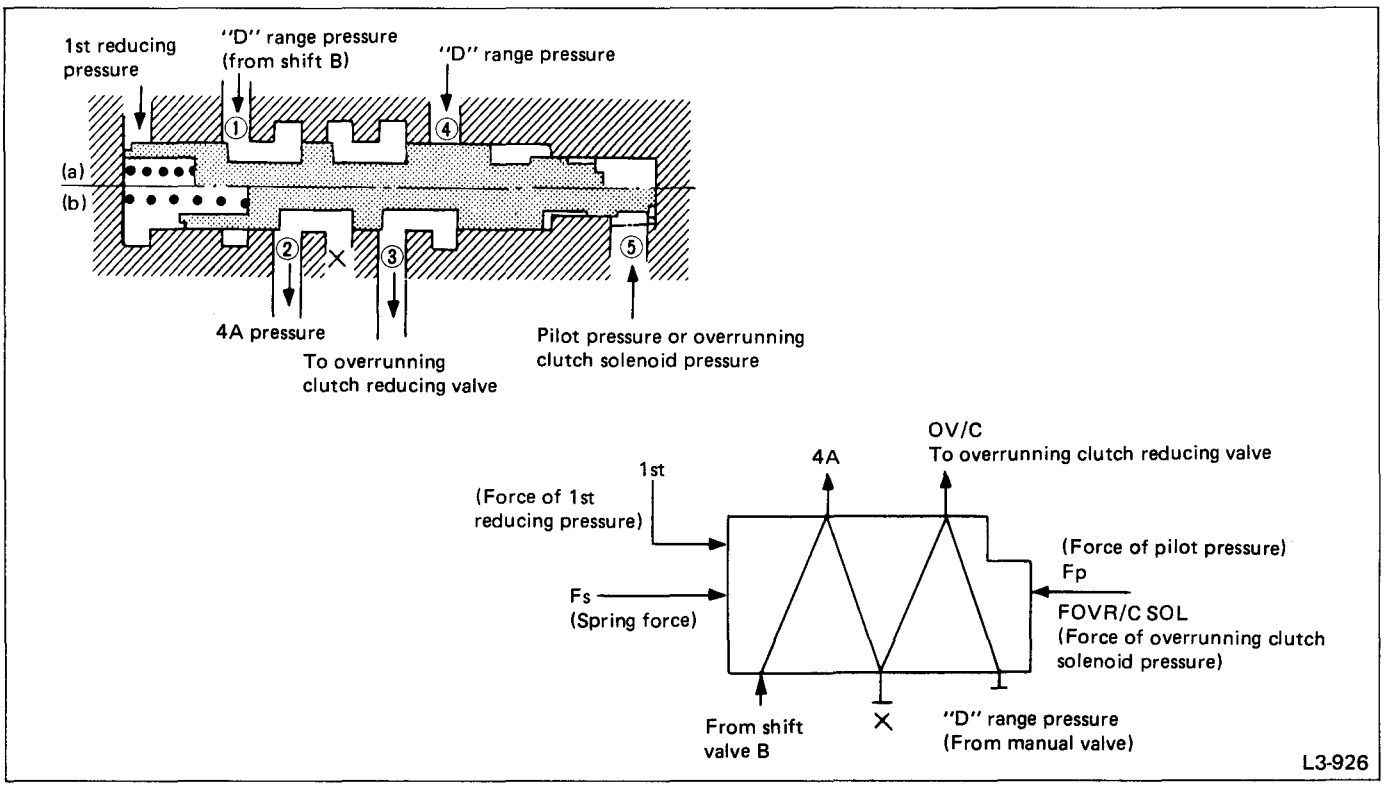

Fig. 50

(9) Overrunning Clutch Reducing Valve

"D" range

Oil from the overrunning clutch control valve to passage ③ exerts the overrunning clutch pressure to chamber ① via orifice ⑤, and pushes the valve to the right. If overrunning clutch pressure exceeds spring force, the valve moves further to the right. This releases the overrunning clutch pressure. As a result, overrunning clutch pressure is maintained at a constant level.

"3" range

In addition to the forces mentioned above, the valve is also pushed to the left by the force of oil coming from the manual valve into the chamber ②. Accordingly, overrunning clutch pressure is adjusted at a higher level than that of "D" range.

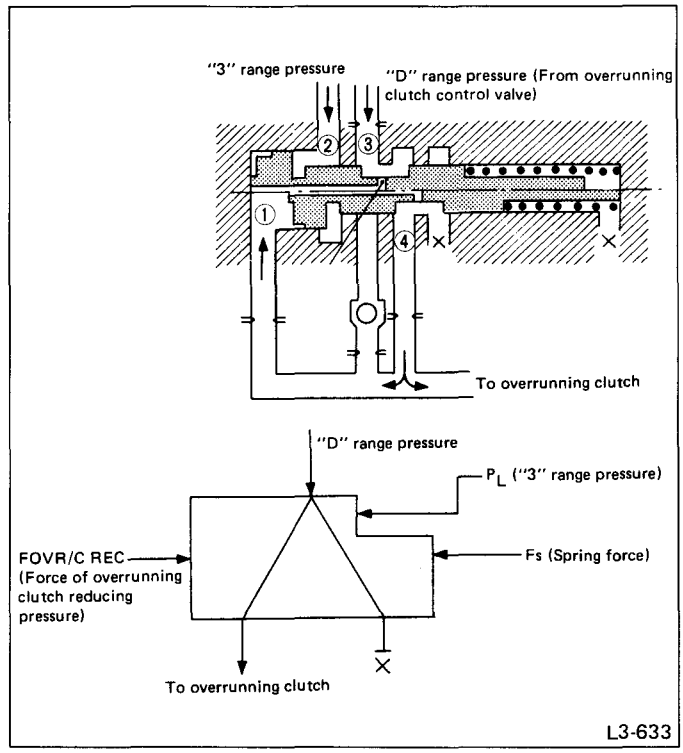

Fig. 51

(10) Shuttle Shift Valve S

"D", "3" range

The valve is pushed to the right by spring force, and is pushed to the left by the "D" and "3" range pressure.
When the throttle opening is small ($F_S > F_D$), the valve is set in condition (a). Overrunning clutch solenoid pressure (shift solenoid 3 pressure) from passage ③ is then applied to the overrunning clutch control valve via passage ②. Engagement of the overrunning clutch is controlled by this pressure.
When the throttle opening is large ($F_S < F_D$), the valve is set in condition (b). Accordingly, pilot pressure from passage ① is applied to the overrunning clutch control valve via passage ②. This pressure prevents the overrunning clutch from engaging. The oil coming from passage ③ exerts pressure on the 3-2 timing valve via passage ④.

"2" range

The "2" range pressure is applied to the valve, setting the valve in condition (a). In this state, engagement of the overrunning clutch can be controlled by the overrunning clutch solenoid pressure (shift solenoid 3 pressure).

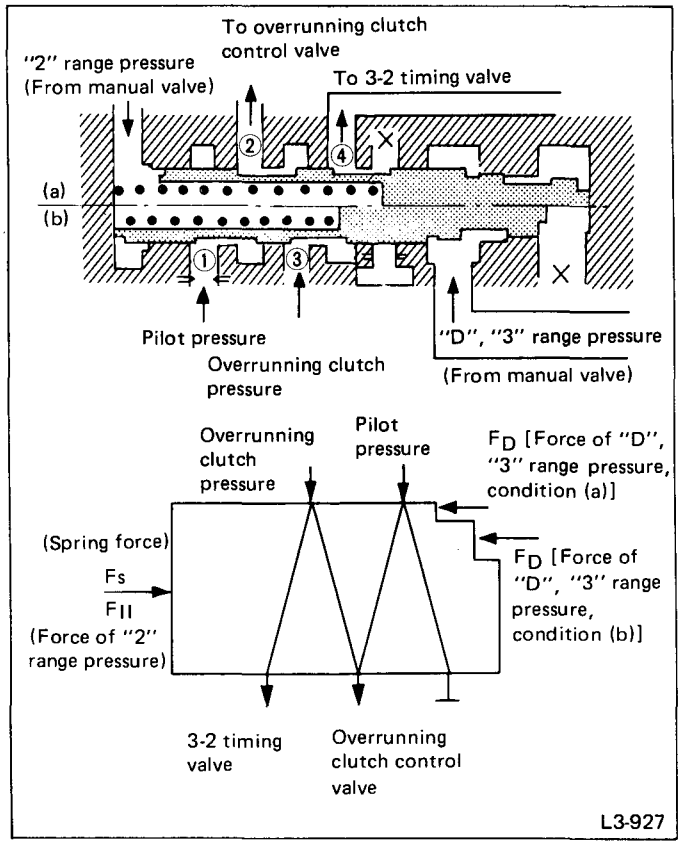

Fig. 52

(11) Pilot Valve

The valve is pushed to the right by pilot pressure, and is pushed to the left by spring force. If pilot pressure force exceeds spring force, the valve moves to the right, and pilot pressure is released. Accordingly, pilot pressure is maintained at a constant level.

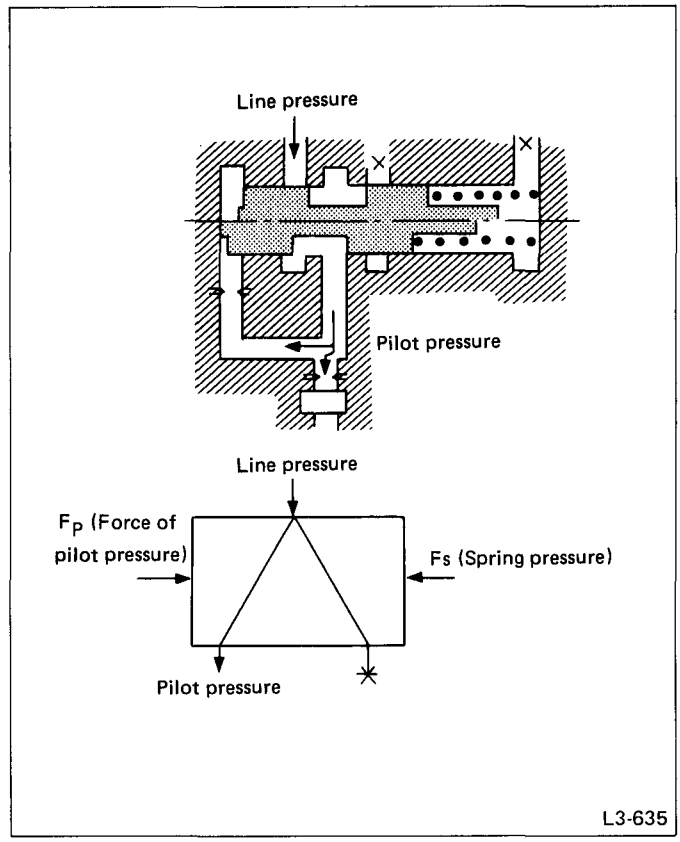

Fig. 53

(12) Manual Valve

Rotary motion of the range select lever is changed into reciprocating motion of the manual valve by the manual lever. In "P","R", "N", "D", "3", and "2" positions, the manual valve is set respectively so that line pressure ④ is distributed to the following line pressure circuits:

"P" range:
Line pressure ③ → ⑤ → drain

"R" range:
Line pressure ③ → ④ → reverse clutch
→ low & reverse brake

"N" range:
Line pressure ③ → None

"D" range & "3" range:

Line pressure ③ → ① → forward clutch
- 4-2 relay valve
- shuttle shift valve S
- shift valve A
- shift valve B
- overrunning clutch control valve

"2" range:

Line pressure ③ → ① → same as "D" range
- ② → shuttle shift valve S
- overrunning clutch reducing valve

"2" range:

1st hold

Line pressure ③ → ① → same as "D" range
- ② → 1st reducing valve
- Same as "2" range

When the valve spool is set in a position where no line pressure is delivered from port ③, pressure at ports ①, ② and ④ is drained from port ③.

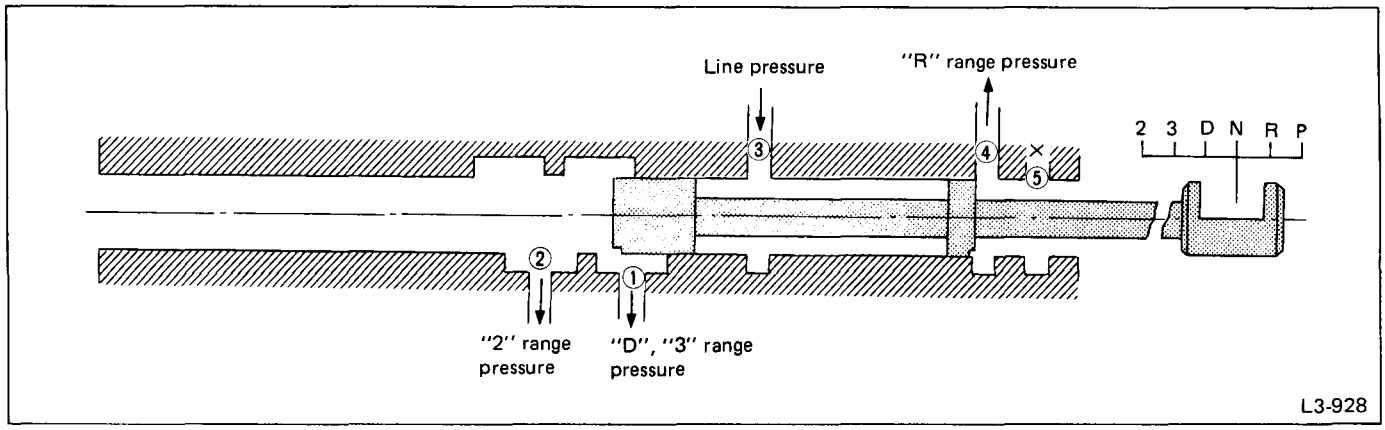

Fig. 54

(13) Lock-up Control Valve

The lock-up control valve is pushed to the right by the torque converter REG pressure and the pilot pressure. Meanwhile, it is pushed to the left by the lock-up duty pressure and spring pressure.

When lock-up is operating:

No lock-up duty pressure is generated, and the valve is set in condition (A). Oil flows to the torque converter AP side, applying lock-up.

In smooth control:

Torque converter REG pressure is controlled by the lock-up duty pressure. Hence, the force applied to the lock-up clutch is controlled for smooth lock-up clutch engagement.

When lock-up is not operating:

Lock-up duty pressure is generated. The valve is set in condition (B). Oil flows into the torque converter REG side, making the lockup inoperative.

In 1st speed "N", "R", and "D" range:

Pilot pressure is generated. The valve is set in condition (B), and lock-up is inoperative.

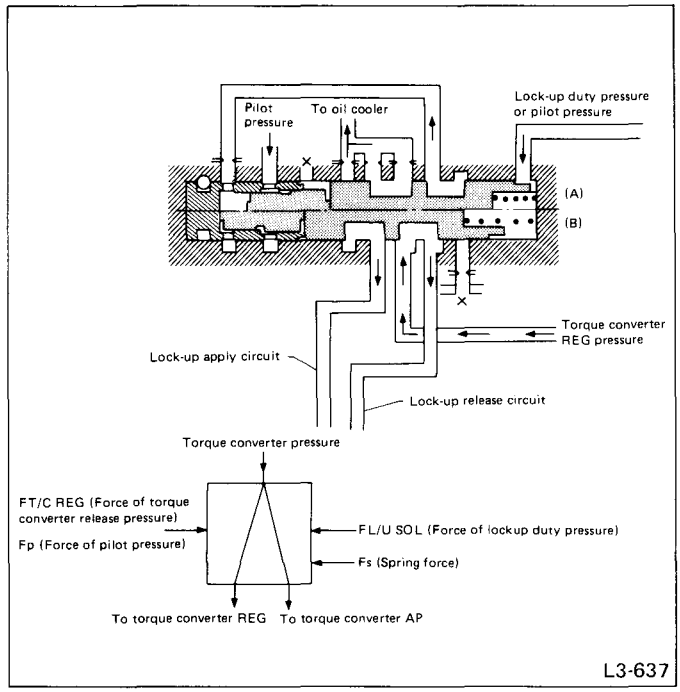

Fig. 55

(14) 1st Reducing Valve

This valve is pushed to the left by the oil in chamber ② coming from passage ①. If the oil pressure exceeds spring pressure, the valve moves to the left, and the oil is drained. Hence, the 1st reducing pressure remains constant.

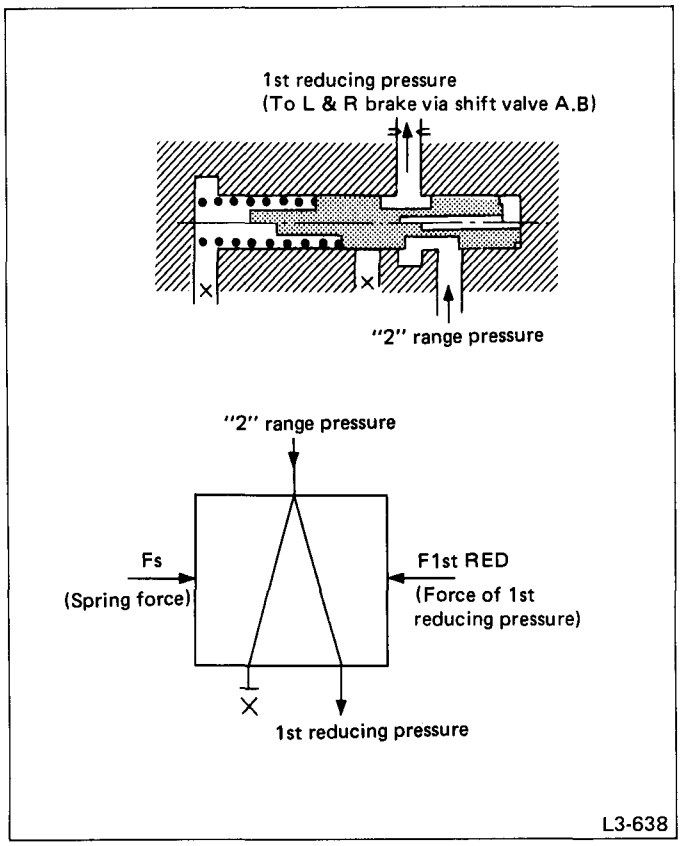

Fig. 56

(15) 3-2 Timing Valve

When shifting from "D" range 3rd to "D" range 2nd:

This valve switches the 3R pressure releasing time.

When oil passes through orifice A only:

The valve is set in condition (B), and the 3R release oil passes through orifice A. Hence, release time is prolonged.

When oil passes through both orifice A and valve:

The valve is in condition (A), and the 3R release oil passes through orifice A and the valve. Hence, release time is shortened.

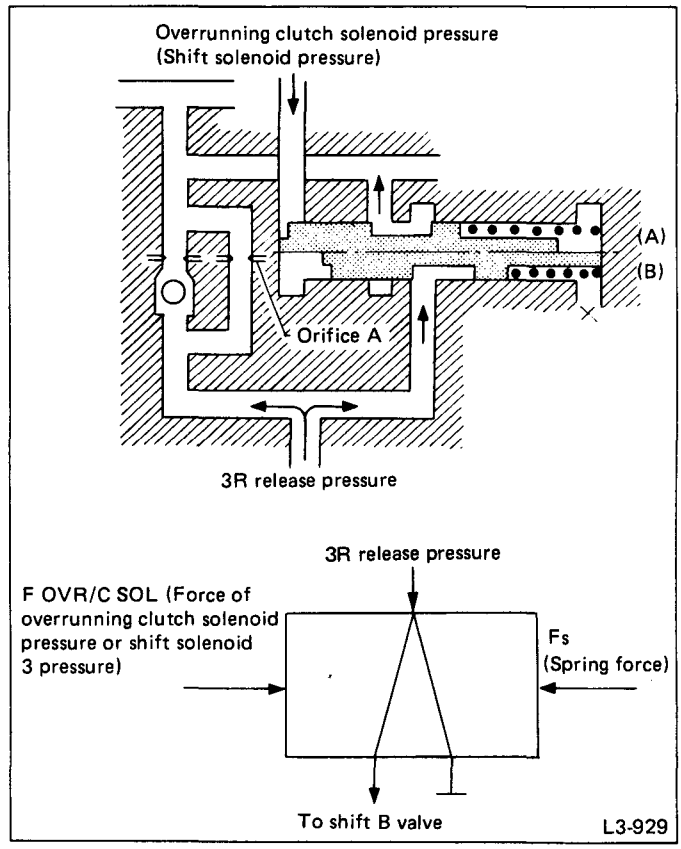

Fig. 57

(16) Servo Charger Valve

When shifting from "D" range 3rd to "D" range 2nd:

In "D" range 3rd speed, the valve is in condition (A). Passage ① communicates with chamber ②. If the 3R pressure exceeds spring pressure, the valve shifts to condition (B), where passage ③ communicates with chamber ②. Accordingly, the valve will remain in condition (B) as long as 2A pressure exists. This means that oil can be fed to the servo 2A chamber without passing through the orifice. Thus, it is possible to quickly compensate for the oil drained through the servo 3R chamber. This prevents engine racing while downshifting.

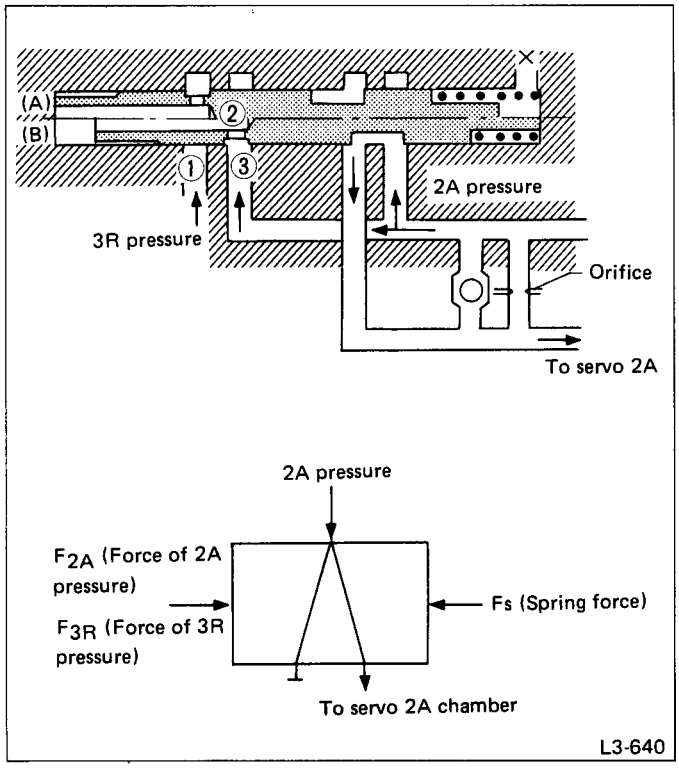

Fig. 58

(17) Accumulator

The job of the accumulator is to lessen the shock when shifting gears. The accumulators used in the present system are the 2A, 3R and 4A accumulators. They are located, respectively, in the 2nd apply pressure circuit, 3rd release pressure circuit and 4th apply pressure circuit to lessen shifting shocks. An N-D accumulator is also provided to reduce shock in selecting.

In addition to electronic control of line pressure, the 2A, 3R and 4A accumulators provide electronic control over the resistance of the accumulators, which serve as shock absorbers in the line pressure passages, according to shifting conditions.

If oil pressure is suddenly applied to the clutch without using an accumulator, the clutch will not engage smoothly, causing an uncomfortable shock. Further, while oil pressure increases smoothly in mechanical types of accumulators, the way it increases is constant. Accordingly, they cannot cope with various operating conditions. For these reasons, in this full-range, electronically-controlled automatic transmission, the resistance of the accumulators is electronically-controlled to correspond to operating conditions. This always assures the optimum, smooth increase of oil pressure when it is applied to the clutch.

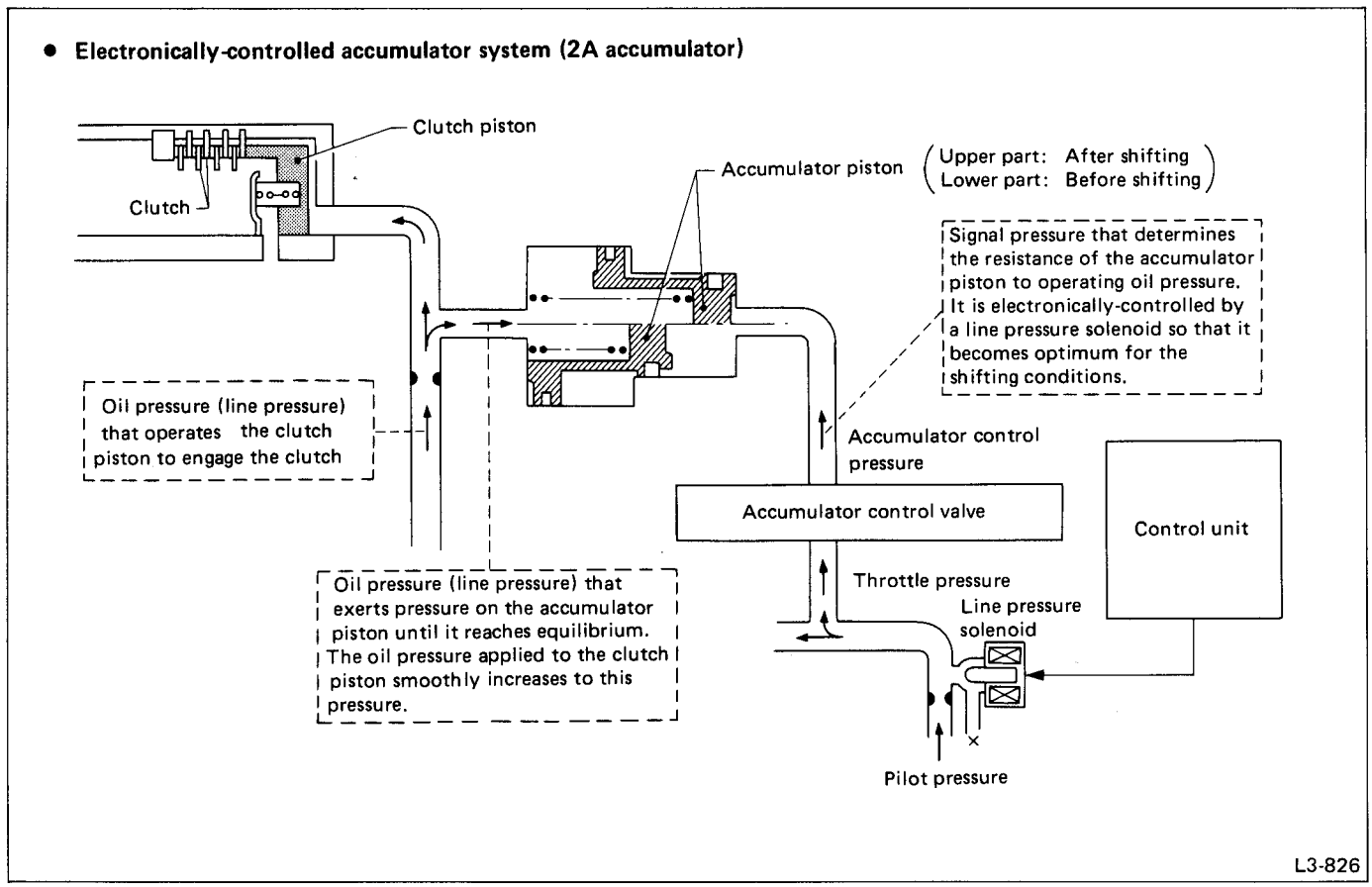

Fig. 59

- **Control of clutch operating oil pressure by an electronically-controlled accumulator**

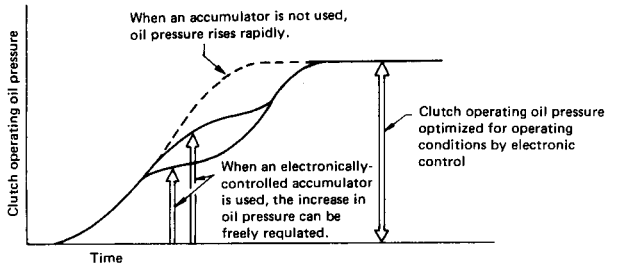

Fig. 60

The four accumulators are arranged in series under the transmission case, in the order of 4A, 2A, 3R and N-D from the front side.

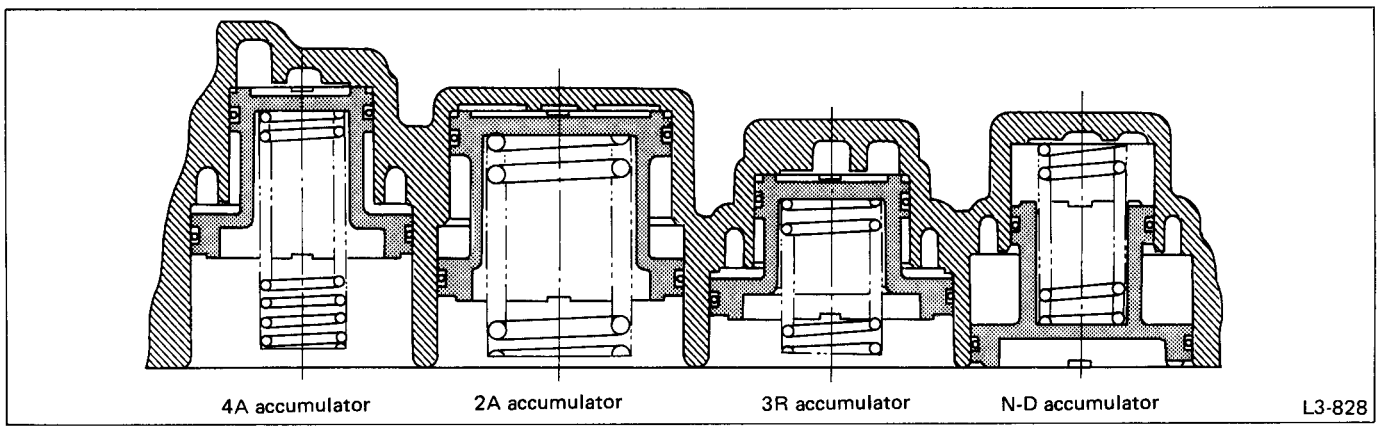

Fig. 61

3-8 Electronic-Hydraulic Control System

1) OUTLINE

The electronic-hydraulic control system consists of various sensors and switches, a transmission control unit and the hydraulic controller including solenoid valves. The system controls the transmission proper including shift control, lock-up control, overrunning clutch control, line pressure control, auto pattern select control and shift timing control. It also controls the 4WD transfer clutch. In other words, the system detects various operating conditions from various input signals and sends output signals to shift solenoids 1, 2 and 3 and duty solenoids A, B and C (a total of six solenoids for 4WD and five solenoids for FWD).

Electronic control I/O functions

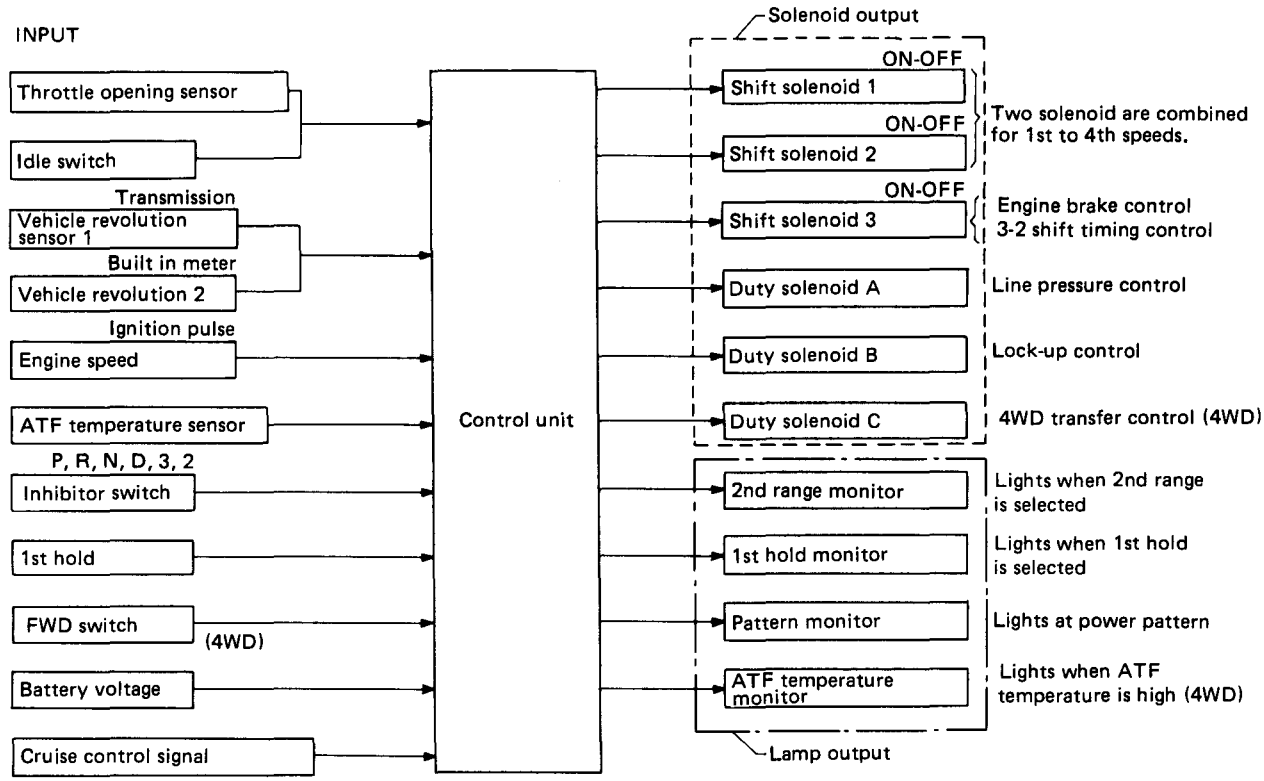

Fig. 62

(1) Input Signal Name and Function

Signal name	Major function
Throttle sensor	Detects throttle opening and determines shift point, line pressure and lock-up vehicle speed according to engine load.
Vehicle revolution sensor 1 (mounted to transmission)	Detects vehicle speed. This signal is used to control shifting, lock-up, line pressure, and transfer clutch.
Vehicle revolution sensor 2 (built-in meter)	FWD . . . Used as backup in case of failure of vehicle revolution sensor 1. 4WD . . . Used to control transfer clutch and as backup in case of failure of vehicle revolution sensor 1.
Ignition pulse	Detects engine speed. This signal is used for lock-up clutch smooth, control at lock-up and to prevent engine overrunning at "2" range "1st hold".
Inhibitor switch	Used to determine shifting and line pressure for respective ranges "P", "R", "N", "D", "3", and "2".
Idle (I/D) switch	Detects throttle closing. This signal is used for lock-up release, and for line pressure control.
Cruise switch (cruise control)	Detects operation of cruise control, and expands "4th" operating range.
4th cut switch (cruise control)	Causes forced release of "4th" from cruise control unit if large difference exists between set vehicle speed and actual speed when cruise is selected.
ATF temperature sensor	Detects ATF temperature. This signal is used for inhibition of lock-up, release of OD and detection of ATF temperature.
"1st hold" switch	Used to maintain the transmission in 1st when going up or down steep hills, running on sand, mud, or slippery surfaces.
FWD switch	Used to change the driving mode from 4WD to FWD. Also used to adapt the vehicle to FWD tester roller. Changeover from 4WD to FWD can be accomplished by inserting a fuse into the fuse holder. (4WD only)

(2) Output Signal Name and Function

Signal name	Function
Shift solenoids 1, 2	Controls shift stage by turning solenoid ON/OFF. Relationship between solenoid operation and shifting stage is shown in Table below. When shifting, timing is controlled for each solenoid to reduce shock.
Shift solenoid 3 (Overrunning clutch)	Controls 3-2 shift timing and overrunning clutch operation. Shift timing is controlled by controlling release speed of oil pressure to reduce shock while downshifting. The overrunning clutch is controlled so that it will operate during coasting to apply engine brake.
Duty solenoid A (line pressure)	Regulates the line pressure according to driving conditions.
Duty solenoid B (lock-up)	Regulates the hydraulic pressure of the lock-up clutch and operates in three modes (open, smooth and lock-up).
Duty solenoid C (transfer pressure)	Regulates the hydraulic pressure of the transfer clutch and controls the driving force to the rear drive shaft.
"Power" indicator light	Indicates whether the shift pattern is "Normal" or "Power". The indicator lights in power mode. This light is also used for "self-diagnosis".
"2nd range" indicator light	Lights when the "1st hold switch" turned OFF in "2" range.
"1st hold" indicator light	Lights when 1st speed is achieved with the "1st hold switch" turned ON and shift lever set to "2" range.
ATF temperature warning light	Lights when ATF becomes hot (exceeds a set temperature level). (4WD only)

(3) Relationship Between Solenoid Operation and Shift Position

Shift position		Shift solenoid 1	Shift solenoid 2	Shift ratio
"D" range		○	○	1st
		X	○	2nd
		X	X	3rd
		○	X	4th
"3" range		○	○	1st
		X	○	2nd
		X	X	3rd
"2" range	1st hold released	○	○	1st
		X	○	2nd
		X	X	3rd
	1st hold applied	○	○	1st
		X	○	2nd
		X	X	3rd

○ : Energized X : Not energized

2) CONTROL SYSTEM

FWD

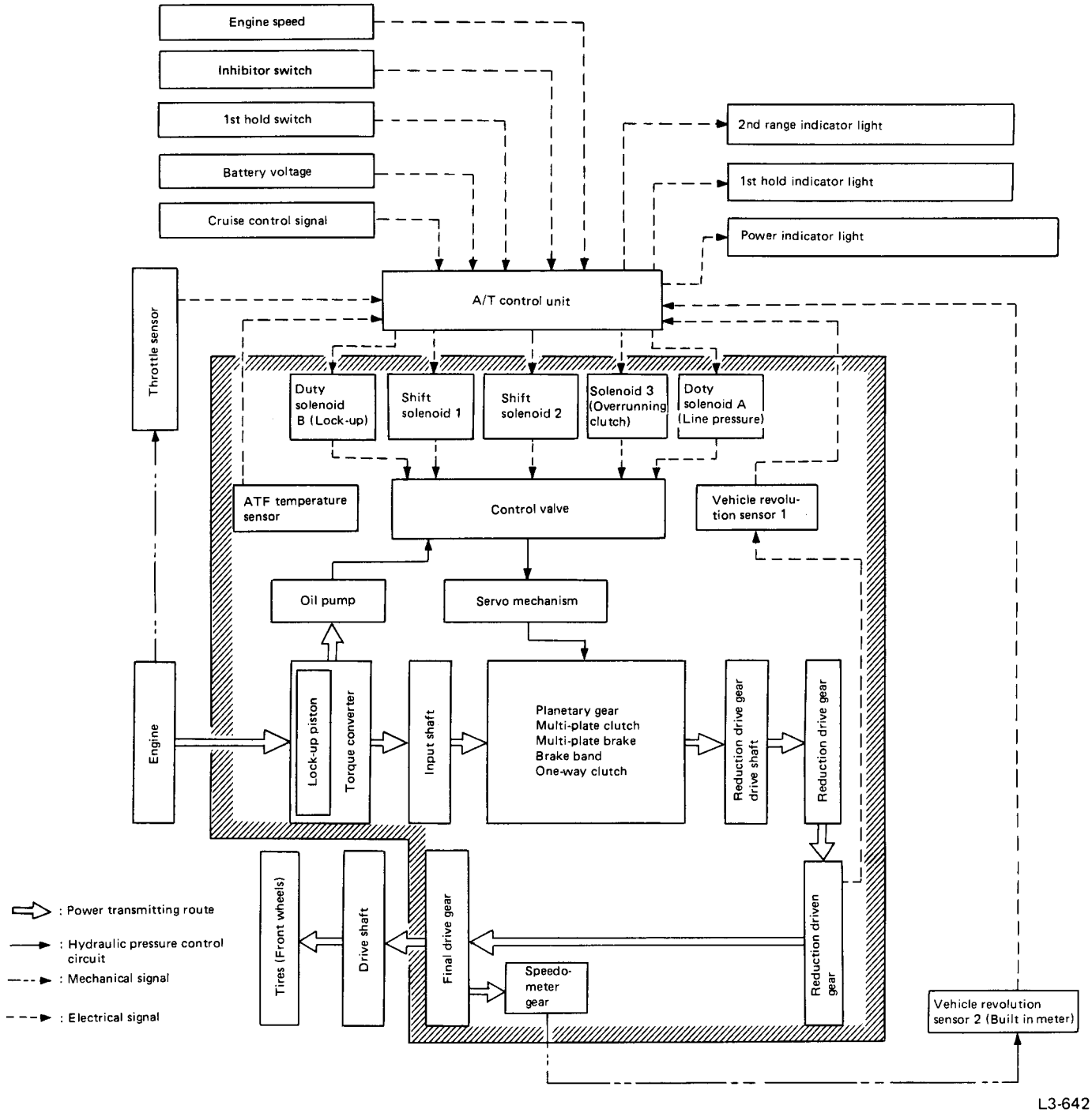

L3-642

Fig. 63

2) CONTROL SYSTEM

4WD

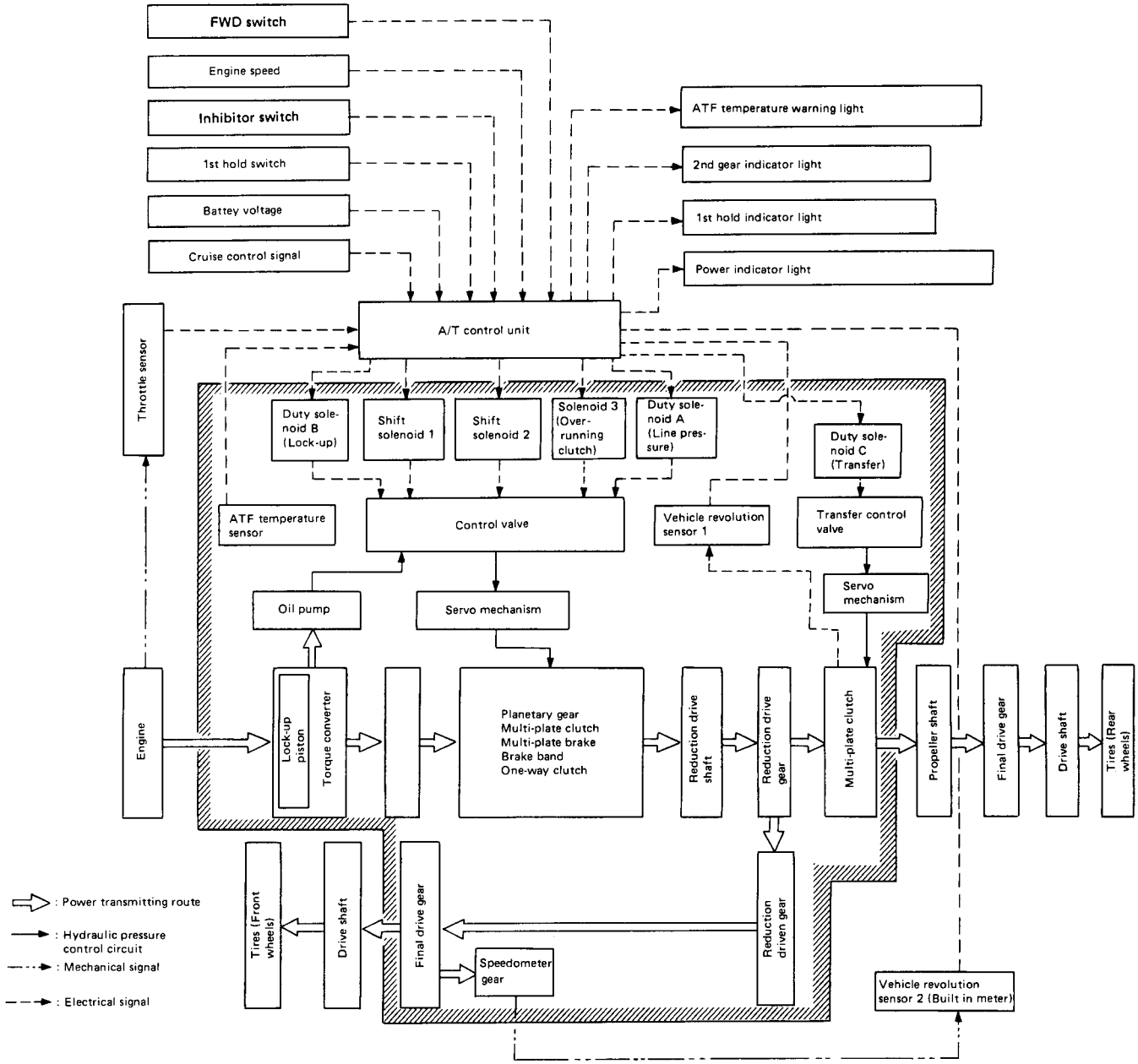

L3-643

Fig. 64

(1) Functions and Control Items

Control item			Description of control
Transmission control	Gear shift control	Normal shift control ● Normal pattern ● Power pattern	Upshifting and downshifting are set for each range, gear position and pattern according to throttle opening and vehicle speed.
		Control with cruise control	When cruise control is set, 4th gear operating range is expanded. [V ≧ 40 km/h (25 MPH)]
		ATF low temperature control	Shifting into 4th gear is prevented when ATF temperature is below the preset value.
		1st hold control	1st hold range is limited only when selector lever is in "2" and 1st hold switch is ON.
	Lock-up control	Normal lock-up control ● "Normal": "D" range only ● "Power" : R, 3, 2 ranges	Lock-up ON/OFF is set for each range, gear position, and pattern according to throttle opening and vehicle speed. (Basically lock-up is OFF during gear shifting.)
		Smooth control	Smooth lock-up is performed when lock-up is switched on.
	Overrunning clutch control	Engine brake control	Overrunning clutch is operated according to range, vehicle speed, and cruise control signals in order to apply engine brake properly.
		3-2 timing control	This control speeds the release of servo piston pressure 3R when shifting down from 3rd to 2nd, thereby preventing engine racing.
	Line pressure control	Ordinary control	Line pressure is regulated according to throttle opening, vehicle speed and range signals.
		Shifting control	Line pressure is reduced when shifting to lessen shifting shock.
		Starting control	Line pressure is at a minimum so as to reduce engine cranking load.
	Automatic pattern select control	Power pattern control (POWER light ON)	Power pattern is selected when throttle opening speed exceeds the preset value.
		Normal pattern control	When throttle opening is less than the preset value, normal pattern is resumed immediately if vehicle speed ≧ 60 km/h (37 MPH), or within three seconds if vehicle speed < 60 km/h (37 MPH).
		ATF temperature	Power pattern is selected if ATF temperature is above the preset value.
	Shift timing control	Shift step control	ON/OFF timing for shift solenoid is controlled.
		Lock-up control	When shifting, the lock-up clutch is temporarily released.
		Overrunning clutch control (3rd to 2nd: small throttle opening in coasting, 2nd to 1st: in coasting)	When shifting down, the overrunning clutch is temporarily disconnected to reduce shifting shock.
		Line pressure control	When shifting, line pressure is controlled to the optimum level so as to reduce shifting shock.

Control item		Description of control
4WD transfer clutch control	Ordinary transfer control	Transfer oil pressure is regulated according to the throttle opening angle and vehicle speed.
	1st hold control	Transfer oil pressure is increased.
	Slip control	Immediately after detecting a slip, transfer oil pressure is controlled to the same pressure as "1st hold". (This control is canceled if V $\geqq$ 60 km/h (37 MPH), or when throttle is closed fully.)
	Control in turns	Transfer oil pressure is reduced after detecting the turn.

(2) Power Indicator Light

The automatic transmission equipped vehicle is capable of automatically selecting two driving patterns; a normal pattern suitable for ordinary driving and a power pattern suitable for driving uphill or rapid acceleration. The power indicator light lights when the power pattern is selected. See the table below:

Selector lever position	Changeover from normal pattern to power pattern	Power indicator light ON/OFF
"D" range	Pattern is changed automatically according to depression of accelerator pedal.	• "Normal" pattern: OFF • "Power" pattern: ON

(3) 1st Hold Indicator Light

The 1st hold indicator light lights when 1st speed is attained with the 1st hold switch set to ON and A/T selector lever set to "2" range. See the following table:

Selector lever	1st hold SW position	Vehicle speed	1st hold indicator light ON/OFF
"2" range	ON	Below 50 km/h (31 MPH)	ON
		Over 50 km/h (31 MPH)	OFF
Other than "2" range	ON	0 km/h (0 MPH) to Max. speed	OFF
Other than "2" range	OFF	0 km/h (0 MPH) to Max. speed	OFF

3) A/T CONTROL UNIT

The A/T control unit is mounted to the side face. It's front faces the wheel arch with the left side toward the rear seat. It receives various sensor signals and determines the running conditions of the vehicle. It then sends control signals to each solenoid according to the preset gearshift characteristic data, lock-up operation data, and transfer clutch torque data (duty ratio).

Item \ Control item		Gearshift control	Lock-up control	Line-pressure control	Shift-pattern selection control	Engine brake control	4WD control	Fail-safe function	Self-diagnosis function
Input	Throttle sensor	O	O	O	O	O	O	O	O
	Vehicle revolution sensor 1 (output shaft revolution sensor mounted to transmission)	O	O	O	O	O	O	O	O
	Vehicle revolution sensor 2 (built into meter panel)	(Note 1) O	(Note 1) O	(Note 1) O	(Note 1) O	(Note 1) O	O		O
	Ignition pulse	O	O	O					O
	Inhibitor switch	O	O		O	O	O	O	(Note 2) O
	1st hold switch	O				O	O		(Note 2) O
	ATF temperature sensor	O	O	O	O		O		O
	Idle switch	O	O	O			O		(Note 2) O
	Cruise control: Set signal	O				O			
	Cruise control: "4th" range release signal	O				O			
	FWD switch						O		(Note 3) O
Output	Shift solenoid 1	O						O	O
	Shift solenoid 2	O						O	O
	Duty solenoid A (line pressure)			O				O	O
	Duty solenoid B (lock-up)		O					O	O
	Overrunning clutch solenoid	O				O		O	O
	Duty solenoid C (transfer)						O	O	O
	ATF temperature warning light						O		
	Power indicator light				O				O
	1st hold indicator light	O							
	2 range indicator light	O							

NOTES: (1) Provided as spare for car-speed sensor 1 (mounted to transmission)
(2) Used as the diagnosis starting condition. If self-diagnosis does not begin, there is trouble somewhere in the system.
(3) Used to display trouble history.

(1) Shift Pattern Select Control

Shift pattern is selectable automatically between a normal pattern suitable for ordinary economy running and a power pattern suitable for climbing uphill or rapid acceleration.
In the power pattern, the shift down point and shift up point are set higher than those of the normal pattern.
When the power pattern is selected, the POWER indicator light in the meter lights up.

Selector position	Changeover from normal to power pattern	Meter indication
"D" range	Performed automatically corresponding to accelerator pedal depression.	• Normal pattern: OFF • Power pattern: ON

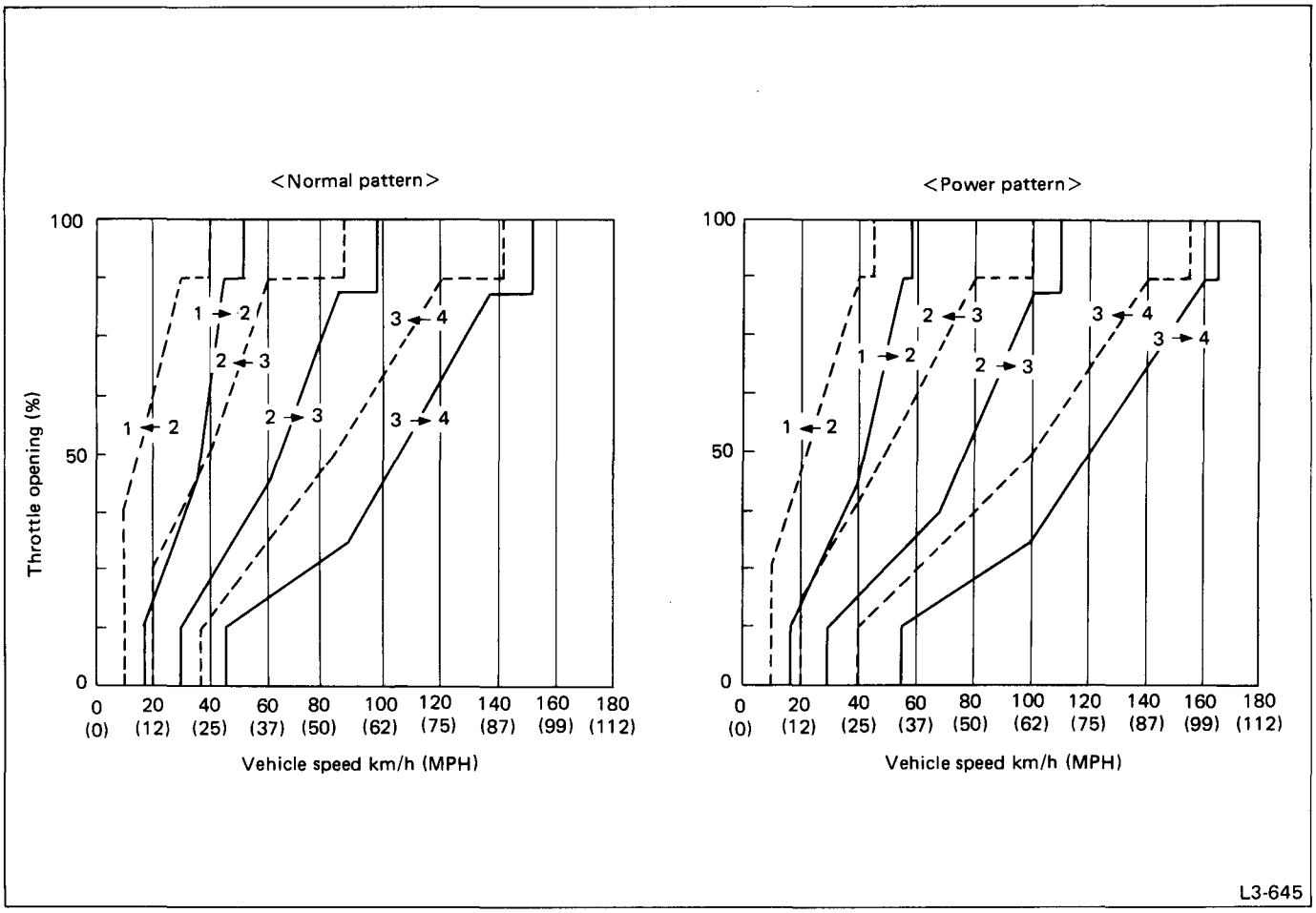

Fig. 65 Shift characteristics

Shift pattern changeover conditions

① Normal pattern to power pattern

Select lever	"D" range
Accelerator depression speed	Greater than set value*

*** Depending on throttle opening and vehicle speed, 16 areas as shown in the figure are set. Accelerator depression speed for pattern changeover is set for each area.**
When the accelerator depression speed exceeds this set value, the pattern changes from normal to power.

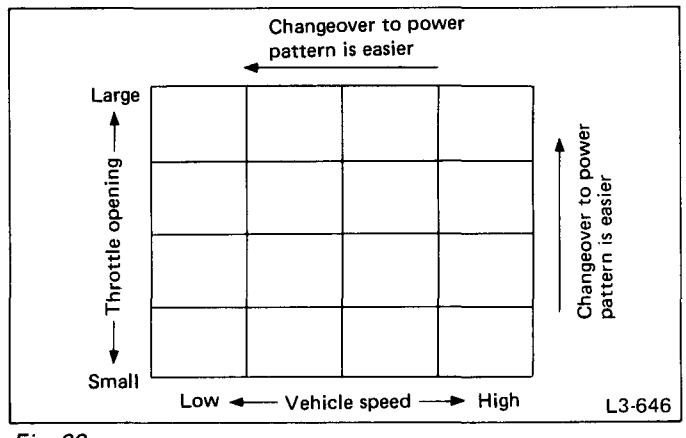

Fig. 66

② Power pattern to normal pattern
The power pattern is shifted to the normal pattern, depending on car speed. Shifting to the normal pattern is determined by the throttle position as shown in Figure below. Time lag in shifting is also determined by car speed. The maximum time lag is 3 seconds.

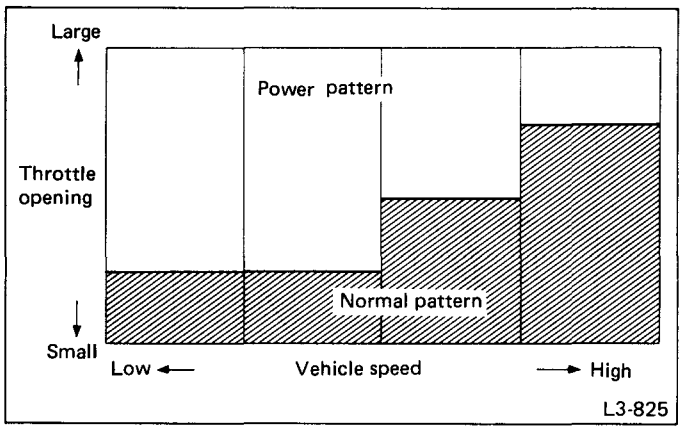

Fig. 67

(2) Shift Control

Gearshifting is controlled in response to driving conditions, according to the shift point characteristic data, as shown in the following diagram, stored in the A/T control unit. Solenoids are operated at the proper time corresponding to the shift pattern, throttle opening, and vehicle speed for smooth shifting.

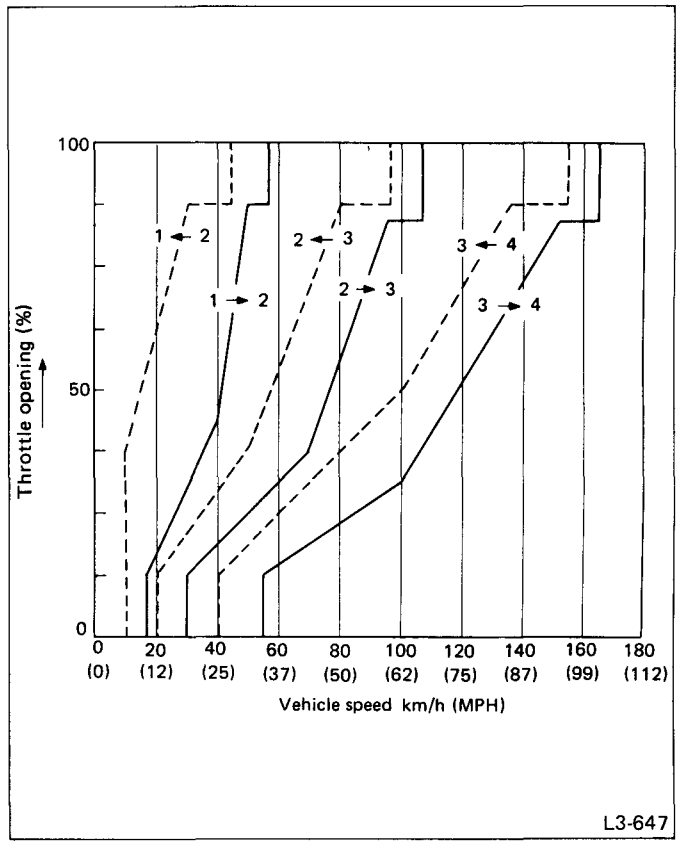

Fig. 68

When oil temperature is below approximately 10°C (50°F), the vehicle cannot be shifted to the 4th range.

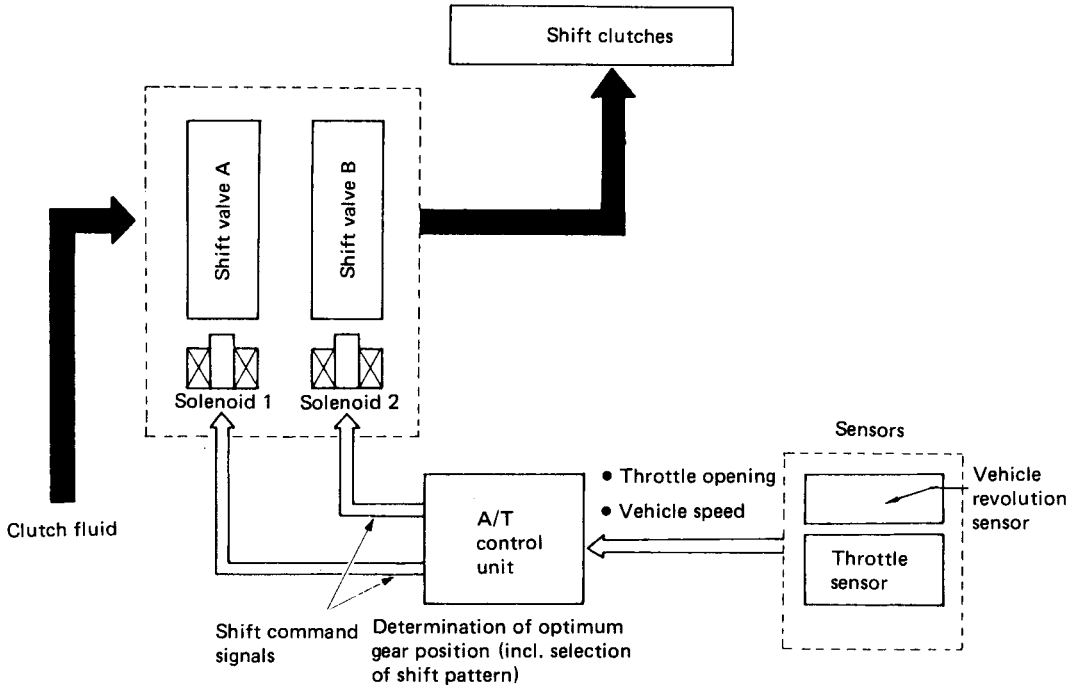

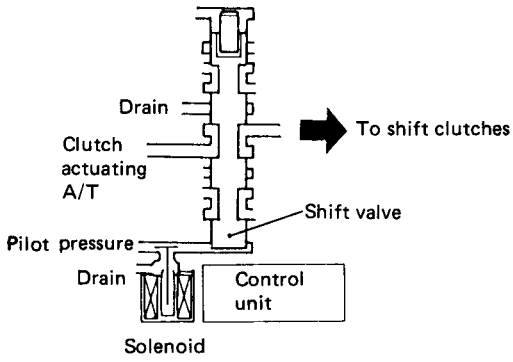

	Solenoid 1	Solenoid 2
1st	○	○
2nd	×	○
3rd	×	×
4th	○	×

① Control unit activates both solenoids 1 and 2 in response to throttle and vehicle speed signals.
② Shift valve moves in response to solenoid operation, supplying/interrupting clutch pressure to the line.
③ Gears are shifted by ON-OFF operation of both solenoids as indicated in Table above.

*When clutch pressure is supplied to the line.

L3-930

Fig. 69 Shift valve operation system

(3) 3-2 Timing Control

When shifting from 3rd to 2nd, the high clutch is disengaged. At the same time, oil pressure (which releases the brake band) is also released from the servo piston 3rd release chamber (3R).

At this point, the servo piston moves to release oil pressure from the 3rd release chamber (3R) and apply oil pressure to the 2nd apply chamber. This causes the brake band to be applied. In other words, high clutch "release" and brake band "application" are properly timed by electronic control. This eliminates engine rev-up under no load or hesitation.

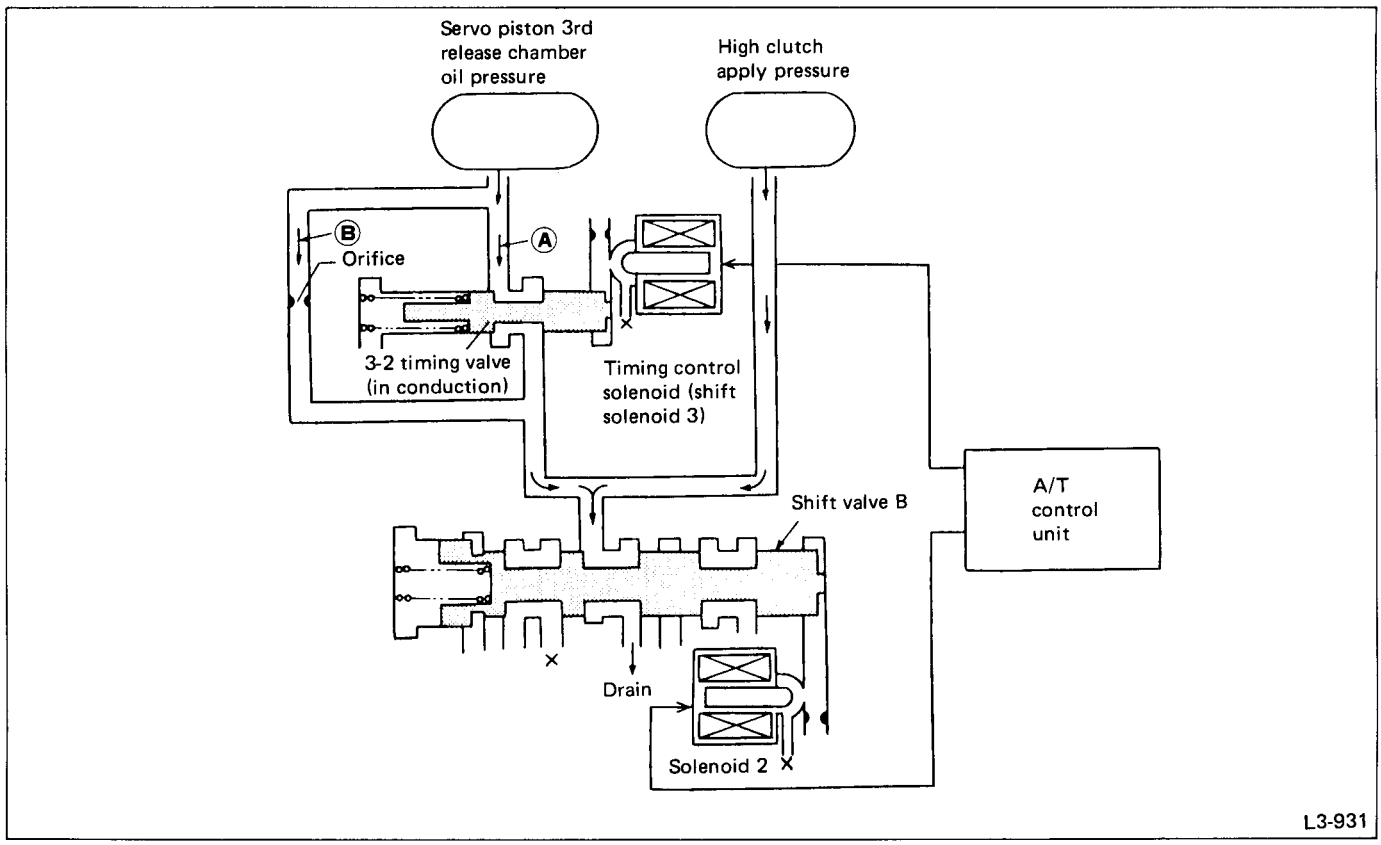

Fig. 70

- When the 3-2 timing valve conducts, oil pressure applied to the 3rd release chamber is quickly released through passage Ⓐ.
- When the 3-2 timing valve does not conduct, oil pressure applied to the 3rd release chamber is slowly released through passage Ⓑ (provided with an orifice).

(4) Line-pressure Control

① Ordinary line-pressure control and starting control

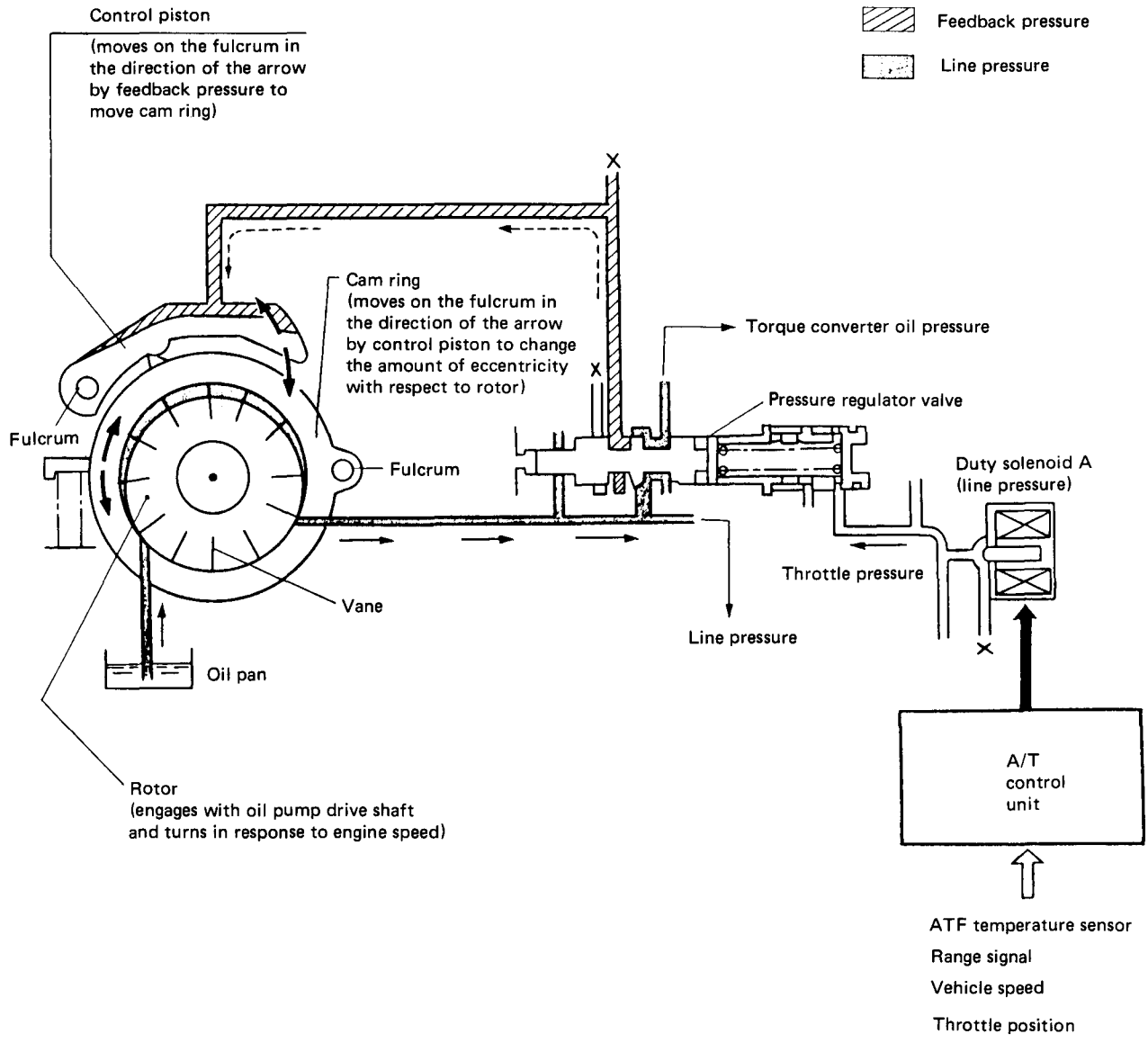

Fig. 71

② Shifting control (Line-pressure control)

Oil pressure which engages shift clutches (to provide 1st through 4th speeds) is electronically controlled to meet varying operating conditions.

In other words, line pressure decreases to match the selected shift position, minimizing shifting shock.

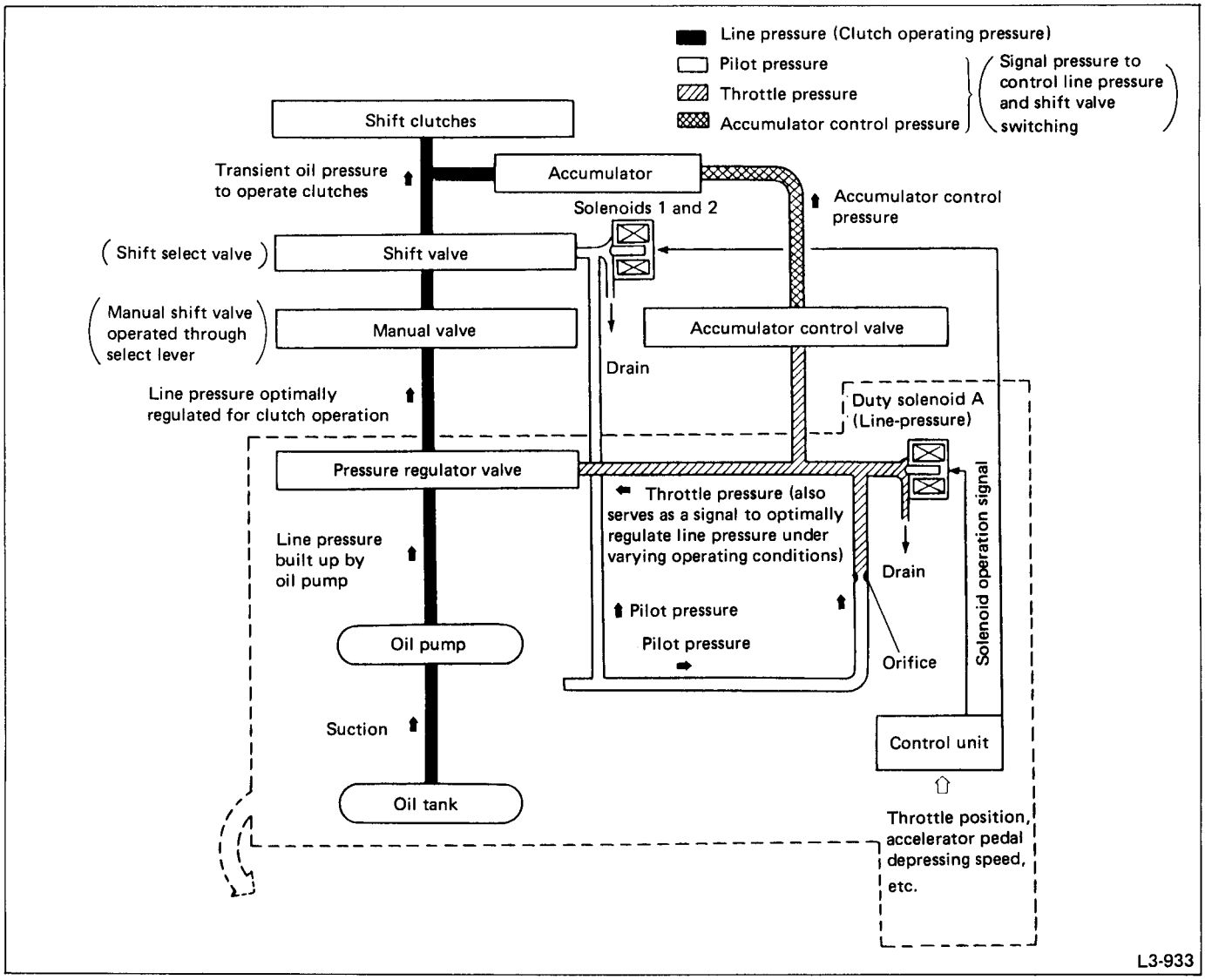

Fig. 72

• Electronic control of clutch oil pressure in summary

a. Solenoids activate through the control unit which receives various control signals (throttle signal, etc.)

b. Control signals are converted into throttle pressure, which is transmitted to the pressure regulator valve.

c. The pressure regulator valve optimally regulates line pressure (built-up by oil pump) in response to throttle pressure, matching varying operating conditions.

(5) Fail-safe Function N

A fail-safe function is provided to maintain driveability even if trouble should occur in the vehicle revolution sensor, throttle sensor, inhibitor switch, or any of the solenoids.

① Vehicle revolution sensor

A dual speed-sensing system is used. The speed signal is taken from the transmission (output shaft revolution sensor) and also from a sensor built into the speedometer. Even if one sensor system fails, the vehicle can be controlled normally with the other sensor system.

② Throttle sensor

If throttle sensor becomes faulty, throttle will be set to the predetermined position. (In all ranges, throttle is set to the 5/8 position.)

③ Inhibitor switch

If two signals are inputted due to inhibitor switch failure, the vehicle can be driven under the following priority.

D > N (P) > R > 3 > 2

Same as with "2nd" range if "1st hold" switch is faulty.

④ Sol 1 (shift) and sol. 2 (shift)

If trouble occurs in either solenoid, the other one is turned OFF to attain the following gear setting to allow vehicle operation. Should trouble occur in both solenoids, the hydraulic circuit operates mechanically.

Shift position		Normal state			Faulty solenoid 1			Faulty solenoid 2			Faulty solenoids 1, 2		
		1	2	Gear	1	2	Gear	1	2	Gear	1	2	Gear
"D" range		○	○	1st	–	○→X	3rd	○→X	–	3rd	–	–	3rd
		X	○	2nd	–	○→X	3rd	X	–	3rd	–	–	3rd
		X	X	3rd	–	X	3rd	X	–	3rd	–	–	3rd
		○	X	4th	–	X	3rd	○→X	–	3rd	–	–	3rd
"3" range		○	○	1st	–	○→X	3rd	○→X	–	3rd	–	–	3rd
		X	○	2nd	–	○→X	3rd	X	–	3rd	–	–	3rd
		X	X	3rd	–	X	3rd	X	–	3rd	–	–	3rd
"2" range	1st hold switch released	○	○	1st	–	○→X	3rd	○→X	–	3rd	–	–	3rd
		X	○	2nd	–	○→X	3rd	X	–	3rd	–	–	3rd
		X	X	3rd	–	X	3rd	X	–	3rd	–	–	3rd
	1st hold switch operated	○	○	1st	–	○→X	3rd	○→X	–	3rd	–	–	3rd
		X	○	2nd	–	○→X	3rd	X	–	3rd	–	–	3rd
		X	X	3rd	–	X	3rd	X	–	3rd	–	–	3rd

○ : Energized X : Non-energized – : Failed

⑤ Duty sol. A (Line pressure)

If duty solenoid A fails, the solenoid is turned OFF and line pressure is raised to maximum to enable vehicle operation.

⑥ Duty sol. B (Lock-up)

If duty solenoid B fails, the solenoid is turned OFF and lock-up is released.

⑦ Sol. 3 (Overrunning clutch)

If the overrunning clutch solenoid fails, the solenoid is turned OFF. The overrunning clutch will engage so that the engine brake will be applied when reducing vehicle speed.

⑧ Duty sol. C (Transfer)

When the duty solenoid C becomes inoperative, it turns OFF. This causes maximum oil pressure to be applied to the transfer clutch so that the power is always transmitted to rear axles. (Direct-coupling 4WD)

4) THROTTLE SENSOR

The throttle sensor provides electrical signals corresponding to the throttle opening. It has the following characteristics. The throttle opening and accelerator depression speed are detected by this throttle sensor output.

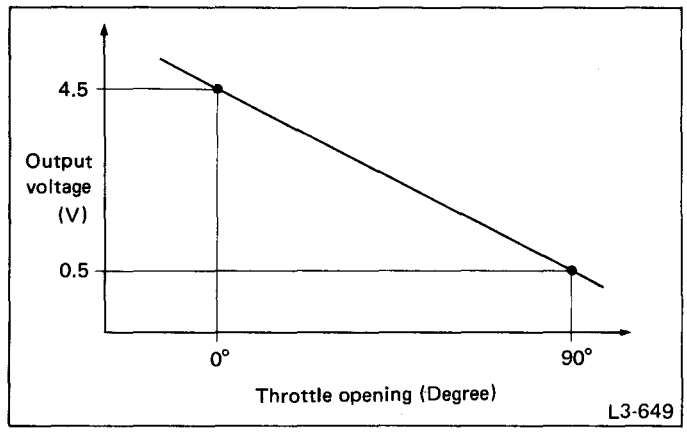

Fig. 73

5) VEHICLE REVOLUTION SENSOR 1 (MOUNTED INSIDE THE TRANSMISSION)

[FWD]

The vehicle revolution sensor (output shaft rotation sensor) is mounted to the transmission case (front to the reduction driven gear). This sensor outputs a pulse signal which is transmitted to the A/T control unit where it is converted to vehicle speed.

[4WD]

The vehicle revolution sensor (output shaft rotation sensor) is mounted to the extension case (from the outside of the case). The sensor outputs a pulse signal which is transmitted to the A/T control unit where it is converted to vehicle speed.
The transfer clutch drum is connected directly to the rear wheel driving propeller shaft. Vehicle revolution sensor 1 on the 4WD model detects rear-wheel speed.

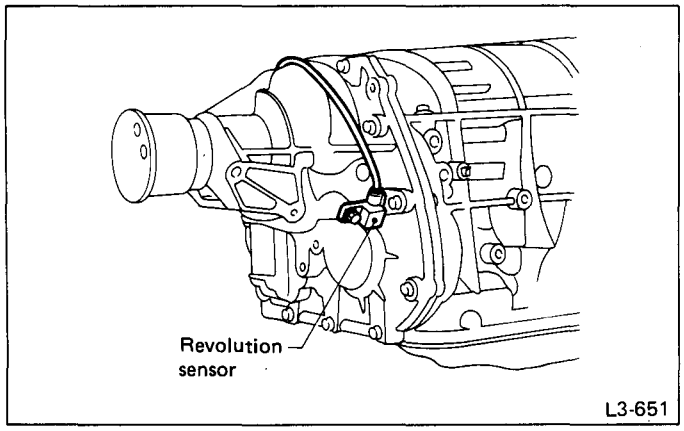

Fig. 74

6) ATF TEMPERATURE SENSOR

This sensor is mounted to the control valve in the transmission. It detects temperature change as an analog electrical signal. The output characteristics of the sensor are shown below.

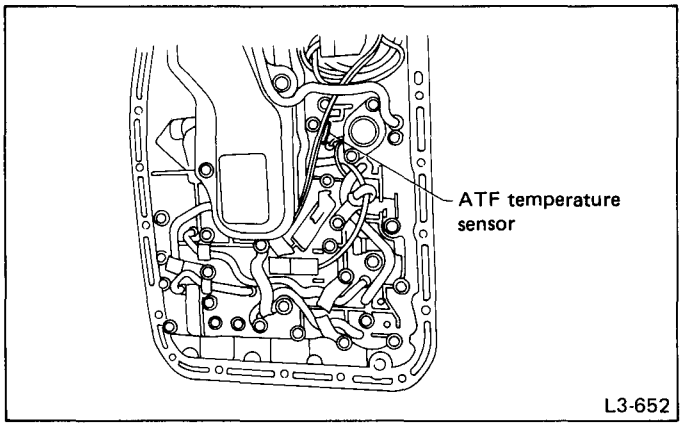

Fig. 75

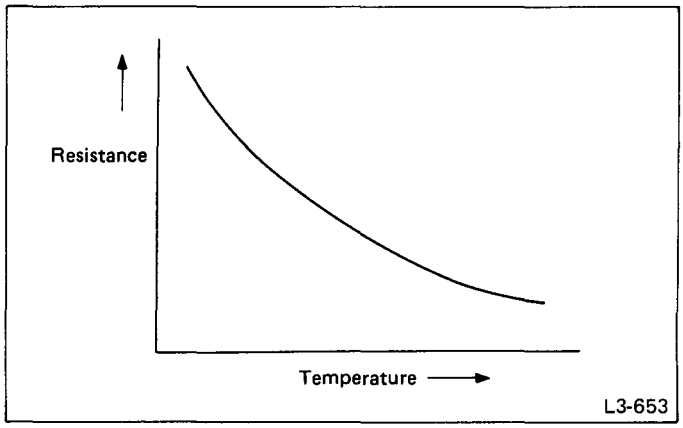

Fig. 76

7) SOLENOIDS

1) SOL. 1 (Shift) and SOL. 2 (Shift)

These solenoids are mounted to the control valve. They are turned ON or OFF according to signals sent from the A/T control unit. The gear positions are changed according to the ON and OFF condition of these solenoids.

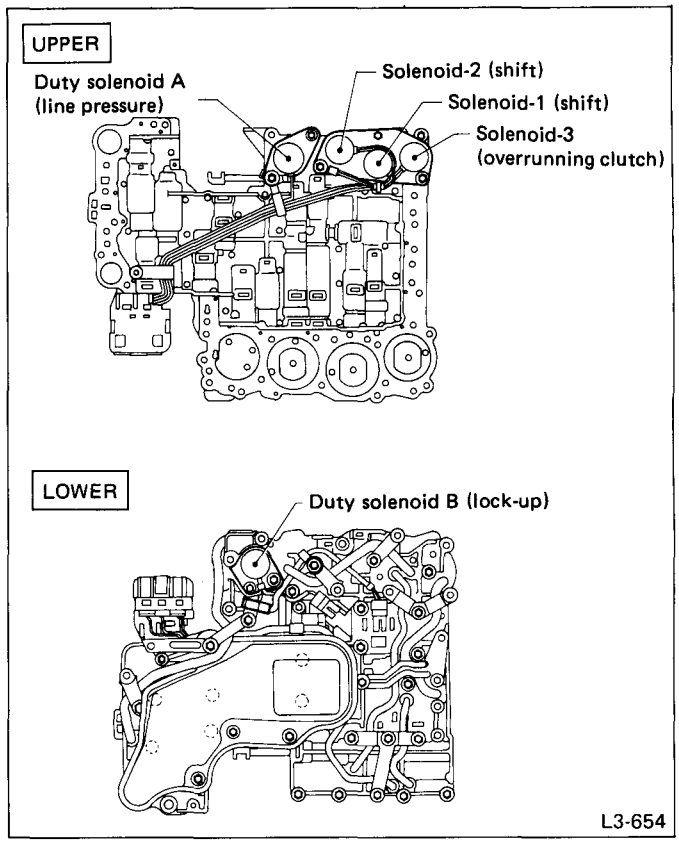

Fig. 77

2) DUTY SOL. A (Line pressure) and DUTY SOL.B (Lock-up)
These solenoids are mounted to the control valve. They repeat ON and OFF at 50 Hz (0.02 sec period)* according to signals sent from the A/T control unit to open/close the drain circuit, thereby controlling the oil pressure to a specified level.

*: A duty cycle type solenoid is used. It is capable of controlling the ON/OFF time ratio in one cycle over the entire range from 0 to 100%. For example, a duty ratio of 50 means 0.01 sec of ON period and 0.01 sec of OFF period in one cycle of 0.02 sec.

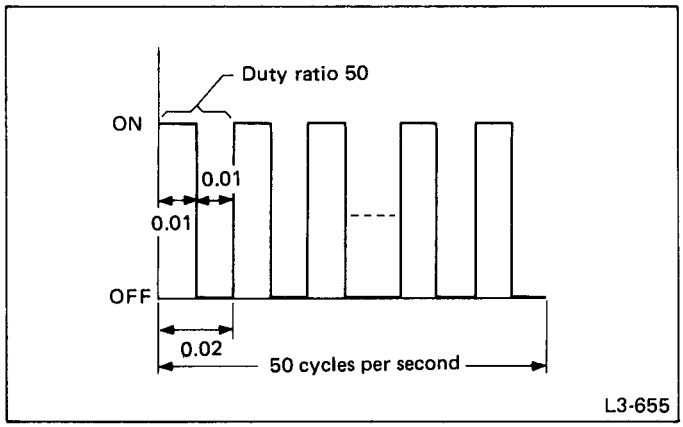

Fig. 78

3) SOL. 3 (Overrunning clutch)
This solenoid is also mounted to the control valve. It is turned ON or OFF according to the signal sent from the A/T control unit. This operation controls the engagement and disengagement of the overrunning clutch.

4) DUTY SOL. C (Transfer)
This solenoid is mounted to the transfer control valve on the side face of the extension case. It repeats ON and OFF at 50 Hz (0.02 sec period) according to signals from the A/T control unit. This operation opens and closes the drain circuit to control transfer oil pressure.

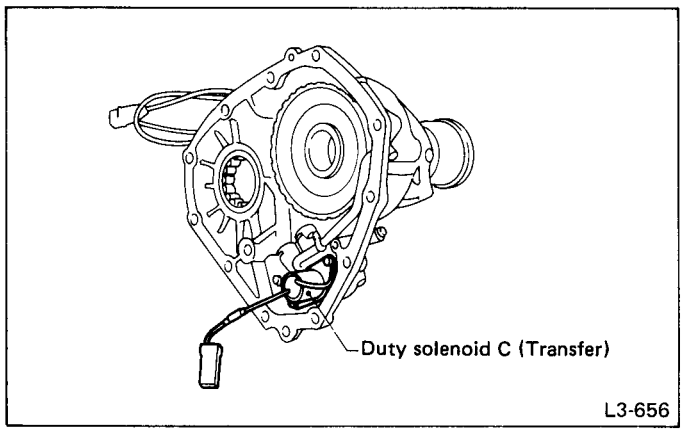

Fig. 79

8) INHIBITOR SWITCH

The inhibitor switch assures safety when starting the engine. This switch is mounted on the right side of the transmission case, and is operated by the range selector lever.

When the selector lever is set to "P" or "N", the electrical circuit is connected in the inhibitor switch and the starter circuit is energized for cranking the engine.

When the selector lever is "R", "D", "3", "2", or "1st hold" range, the electrical circuit is disconnected in the inhibitor switch. Hence engine cranking is disabled. In the "R" range, the backup light circuit is completed in the switch, and the backup lights come on.

In addition to the above function, the inhibitor switch incorporates a circuit for detecting the selected range position and sending the range signal to the A/T control unit.

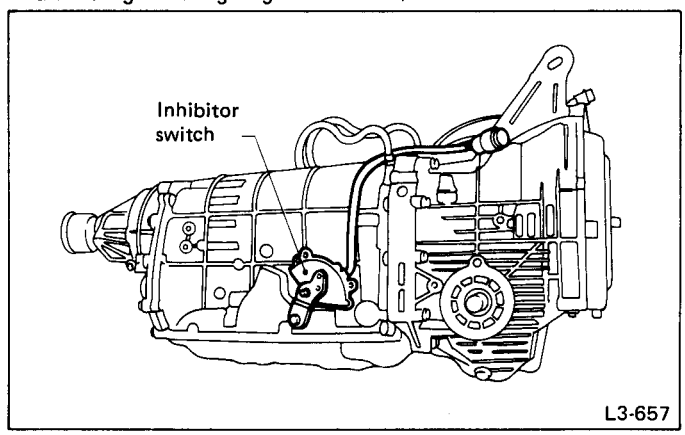

Fig. 80

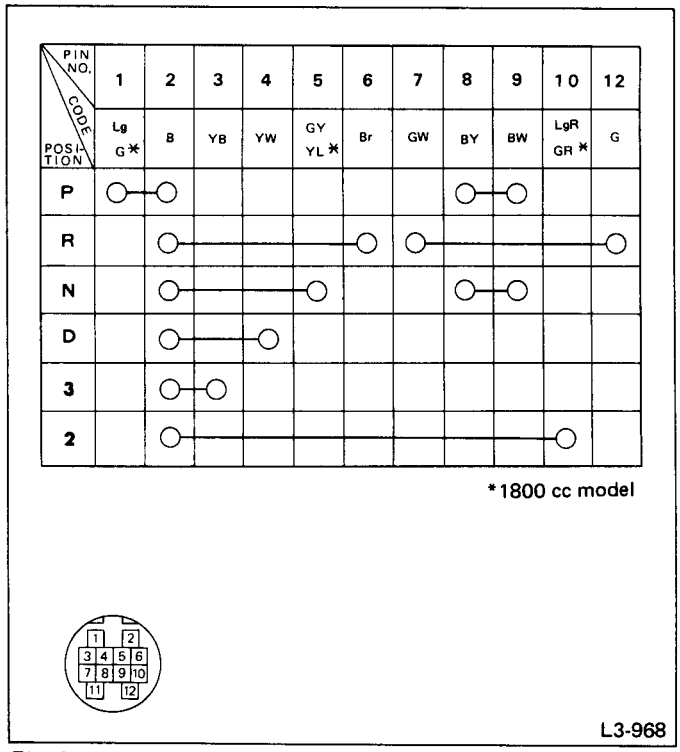

Fig. 81

3-9 4WD Transfer Unit (Full-time 4WD)

1) OUTLINE

This 4WD transfer unit is an electronically controlled MP-T type, full-time, four-wheel driving system which is unique to SUBARU vehicles. It consists of a transfer hydraulic control system composed of various sensors, a transmission control unit, duty solenoids and a combination of hydraulic multi-plate clutches.

The sensors and transmission control unit are also used in common for gearshift control, lock-up control and hydraulic pressure control.

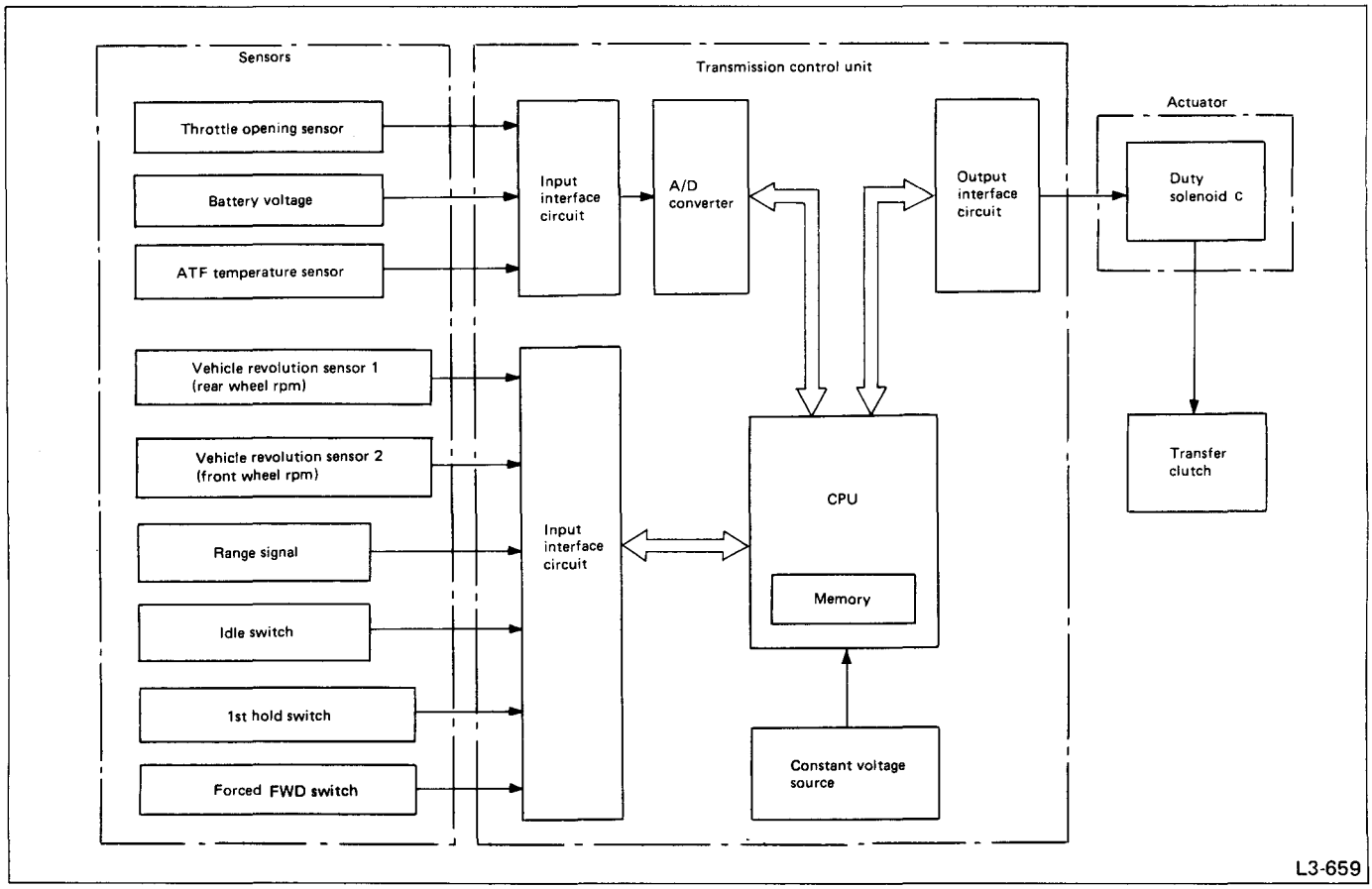

Fig. 82

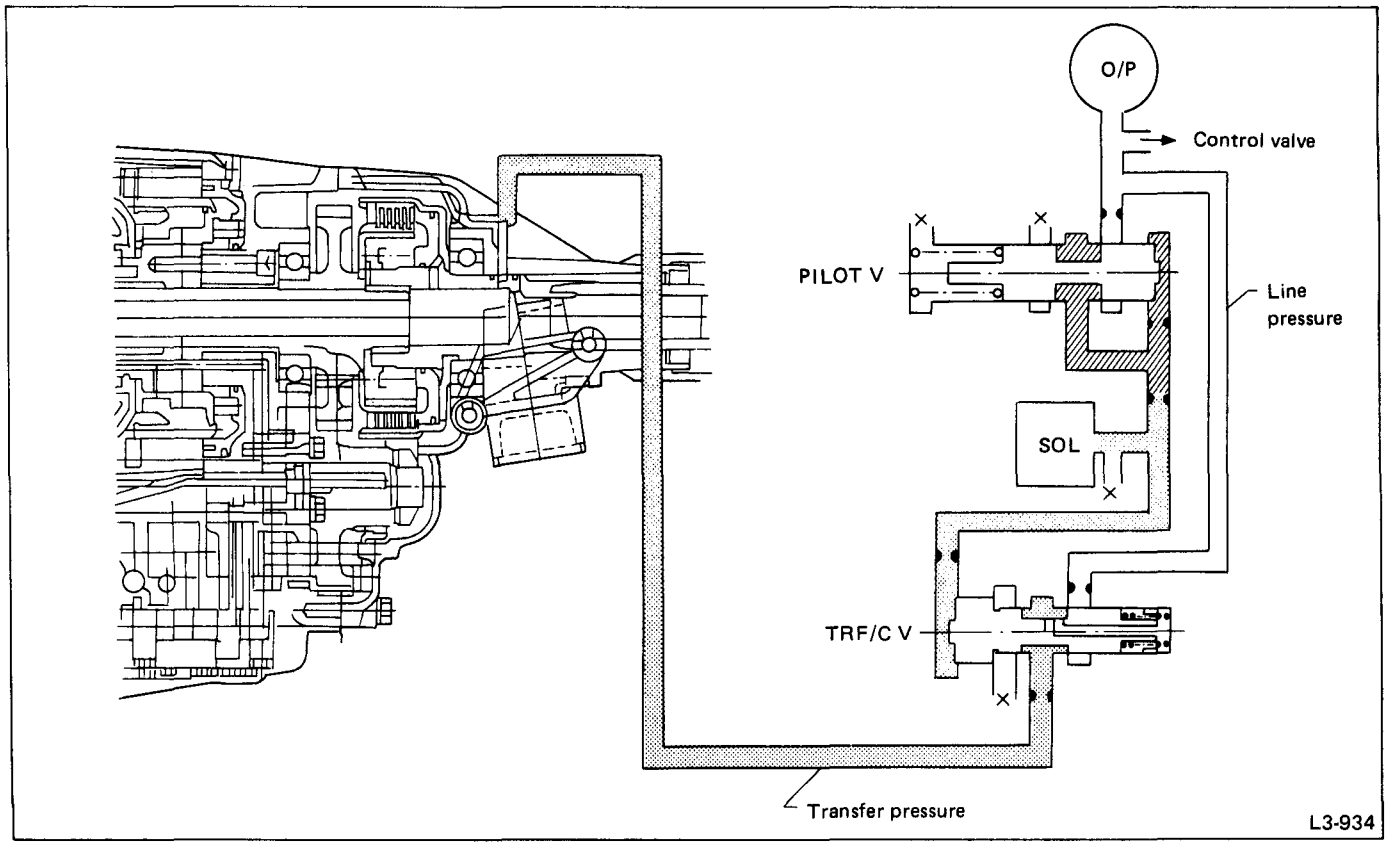
O/P
Control valve
PILOT V
Line pressure
SOL
TRF/C V
Transfer pressure
L3-934

Fig. 83

2) MAJOR COMPONENTS AND THEIR FUNCTIONS

Component name		Function
Sensor	Throttle opening sensor	Detects throttle opening. This signal is used for determining the transfer oil pressure.
	Battery voltage	Detects battery voltage. Used for voltage compensation of duty solenoid.
	ATF temperature sensor	Detects ATF temperature. Used for temperature compensation of duty solenoid.
	Vehicle revolution sensor 1	Detects rear-wheel speed. 30 pulses are generated per rotation of propeller shaft. This signal is used for determining the transfer oil pressure.
	Vehicle revolution sensor 2	Detects front-wheel speed. Four pulses are generated per rotation of speedometer cable. This signal is used for determining the transfer oil pressure.
	Inhibitor switch	Detects selected range signal. Used for determining the transfer oil pressure.
	Idle switch	Used to release control when "slip" is detected.
	Forced FWD switch	Detects FWD mode. Releases transfer clutch.
	1st hold switch	When 1st hold range is selected increases the transfer oil pressure.
Actuator	Duty solenoid C	This solenoid is operated by a signal sent from transmission control unit with duty ratio of 5 to 95% at driving frequency of 50 Hz. This solenoid controls the transfer clutch hydraulic pressure.
Transmission control unit		Computes the duty ratio according to signals sent from various sensors, and issues a signal to the duty solenoid for driving.

3) 4WD TRANSFER UNIT

The transfer unit consists of a hydraulic multi-plate clutch and a transfer hydraulic control system incorporating a duty solenoid valve. It is housed in the extension case together with the bearings, rear drive shaft, etc.

(1) Transfer Clutch (Multi-plate clutch)

The transmission control unit has duty ratios memorized in advance according to running conditions. In order to obtain the optimum transfer torque for the running condition, the oil pressure that is applied to the drive plates and driven plates is controlled by applying oil pressure to the transfer piston from the transfer oil pressure control device including the duty solenoid.

Also, the transfer clutch drum and rear drive shaft are joined to each other by welding. The rear drive shaft has drilled oil passages for transfer clutch control and also for lubrication of extension bushing and ball bearing in it.

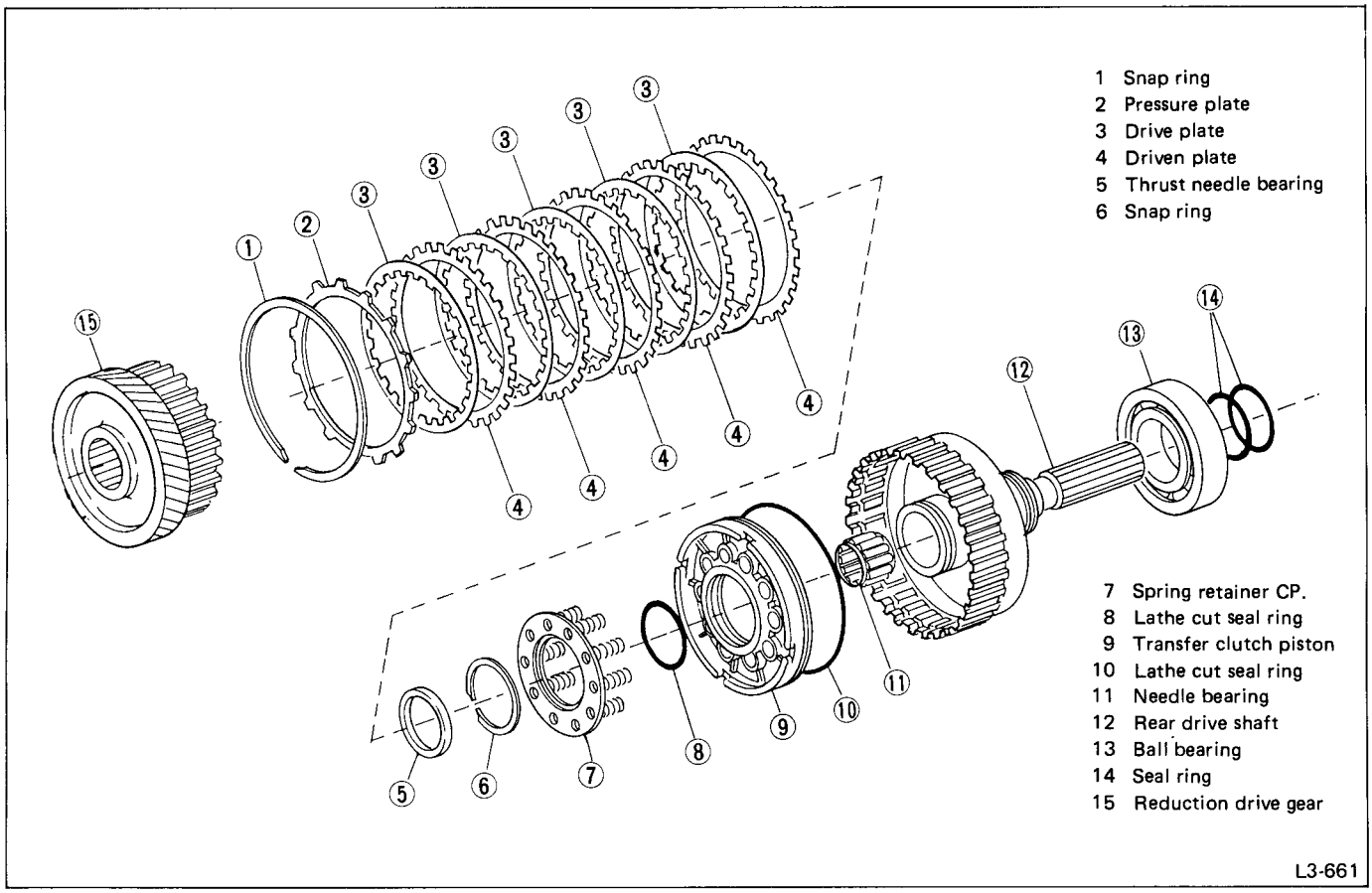

Fig. 84

(2) Transfer Oil Pressure Control Device

The transfer valve body is bolted to the side of the extension case through two gaskets and one separate plate.

Operating oil for the transfer valve body is routed to the extension case through a pipe connecting the discharge circuit of the oil pump on the front of the transmission case to the rear of the case. It is then delivered to the oil pressure circuit provided in the plane on which the transfer valve body is mounted.

This line pressure is reduced to a fixed level by the pilot valve, and becomes the initial pressure of the duty solenoid C. Line pressure is also delivered to the transfer control valve, where it is regulated by duty pressure variations to control the oil pressure so that optimum rear torque distribution is obtained according to running conditions.

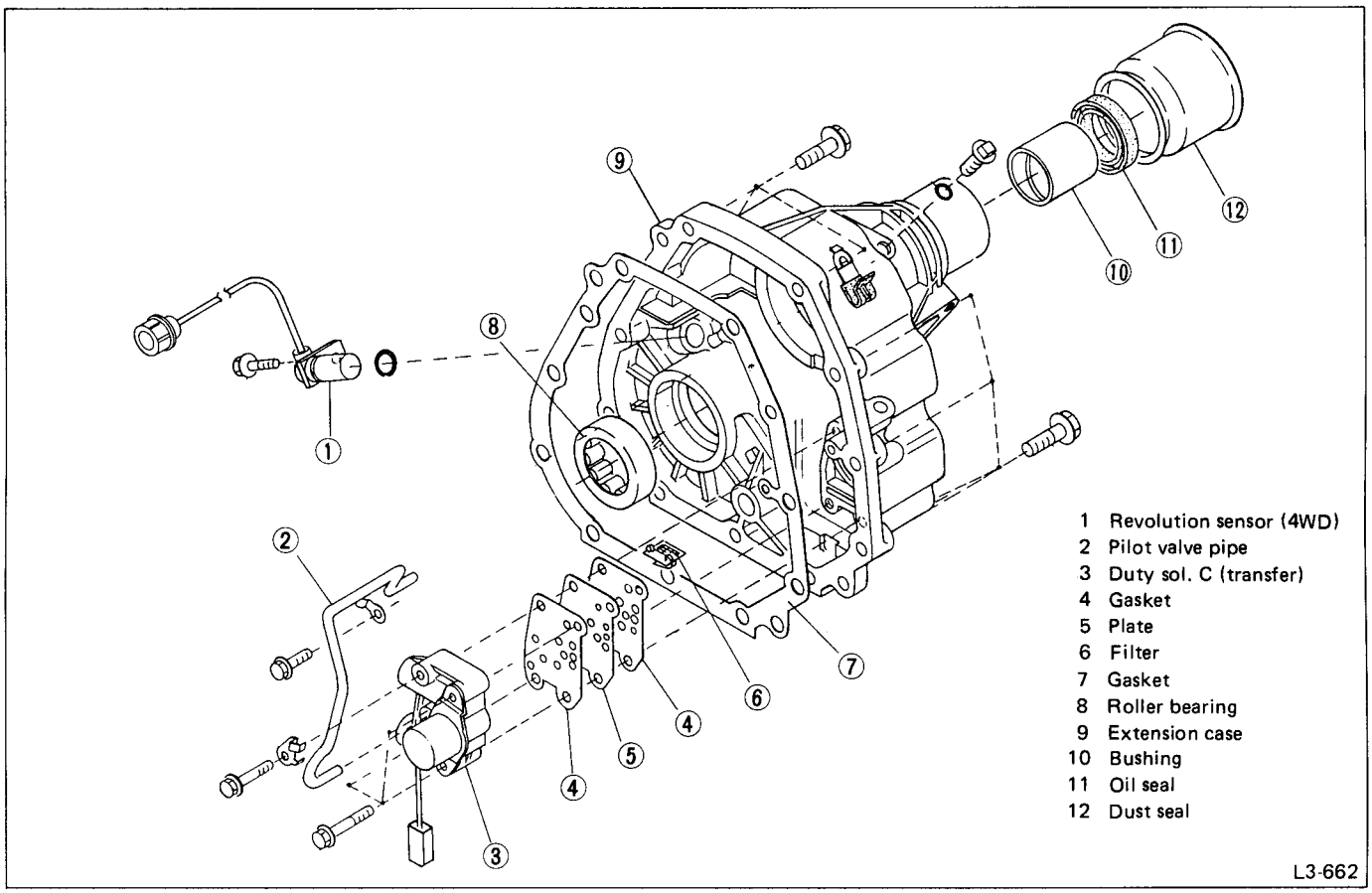

Fig. 85

- **Pilot valve (transfer)**

The pilot pressure acts on the valve to force it to the right, and the spring acts to force the valve to the left. Therefore, when pilot pressure exceeds the force of the spring, the valve moves to the right and drains the pilot pressure so that it does not exceed the fixed level.

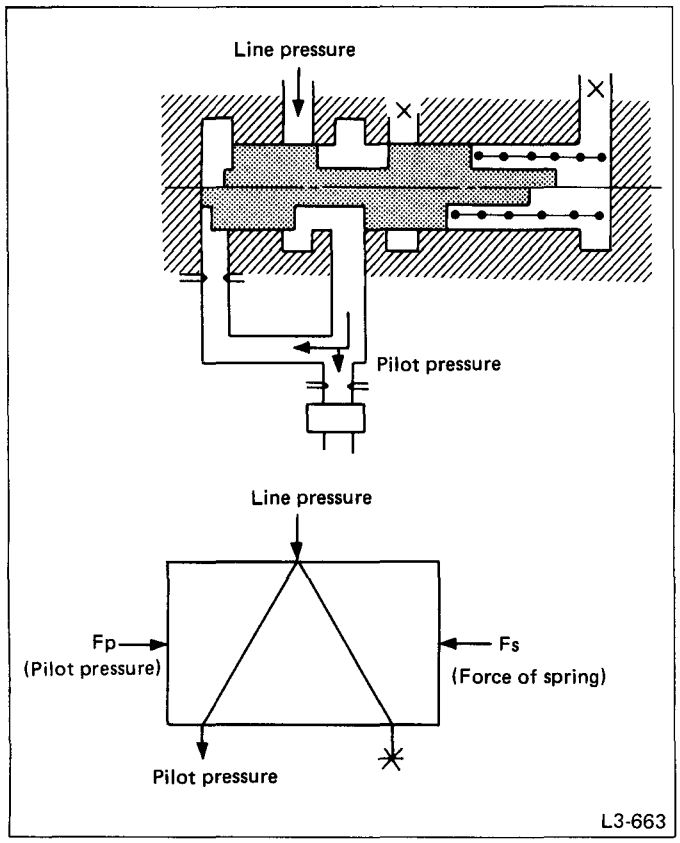

Fig. 86

- **Transfer control valve**

The duty pressure, which is controlled by pulse amplitude modulation by duty solenoid C, acts on the valve as a force pressing it to the right. On the other hand, oil entering from the oil passage ① flows through the throttle inside the valve into the oil chamber ②, where it acts as a force pressing the valve to the left together with the spring. Therefore, oil entering from the oil passage ① is regulated so as to be balanced by the forces acting in both directions and becomes the transfer clutch control oil pressure.

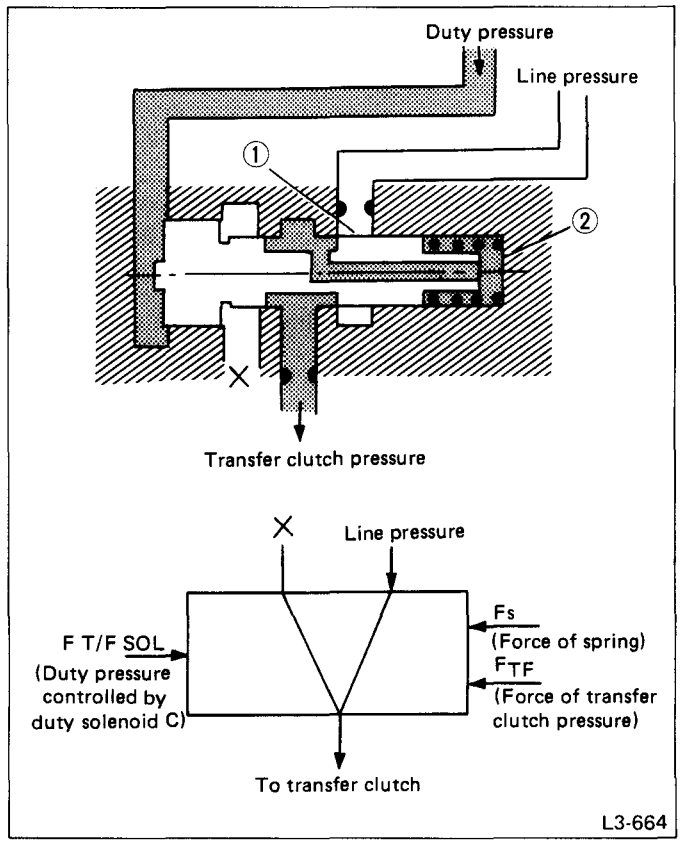

Fig. 87

4) 4WD TRANSFER CONTROL

		Type of control	Gear position	Remarks
1	Basic control	Regulates transfer oil pressure in response to throttle position and vehicle speed.	1st thru 4th and reverse	Normal control 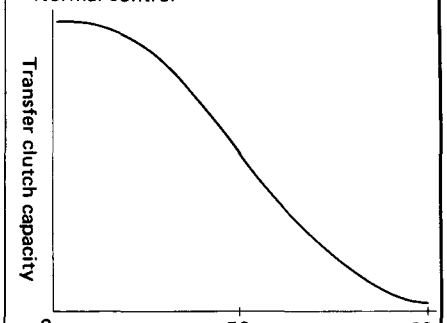 *Fig. 88*
2	Control in 1st hold range	Increases transfer oil pressure (as compared with basic control 1 .)	1st hold range	–
3	Control during "slip" detection	Returns transfer oil pressure to the same as in 1st hold range immediately after "slip" detection.	1st thru 4th and reverse	Release: At more than set vehicle speed and fully closed throttle
4	Control in turns	Decreases transfer oil pressure upon detection of vehicle turns.	1st thru 4th and reverse	–

4 Power Transmission System

4-1 Gearshifling Mechanism

1. OPERATION OF EACH GEARSHIFT MEMBER

			Rev./C	B/B	High/C	FWD/C	OWC (3-4)	OVR/C	Lo / Rev./B	OWC (1-2)
Selector lever operation	P									
	R		○						○	
	N									
	D	1ST				○	○			○
		2ND		○		○	○			
		3RD			○	○	○			
		4TH		○	○	○				
	3	1ST				○	○			○
		2ND		○		○	○			
		3RD			○	○	○	○		
	2	1ST				○	○	○	○	
		2ND *1		○		○	○	○		
		3RD			○	○	○	○		
Switchbutton handling	1st HOLD	1ST *1				○	○	○	○	
		2ND *1		○		○	○	○		
		3RD			○	○	○	○		

Only when selector lever is in "2" and 1st hold button is ON.

*1: For prevention of over-revolution

L3-1029

Fig. 89

Power Transmission System
SCHEMATIC DRAWING

Gearshift Member

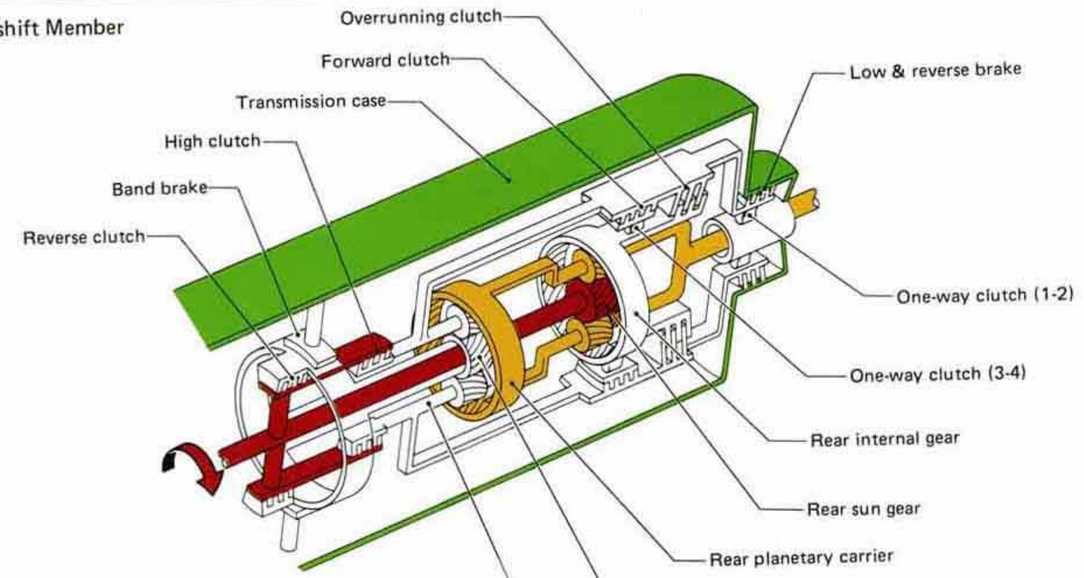

L3-1021

1st ("2" and "1st hold")

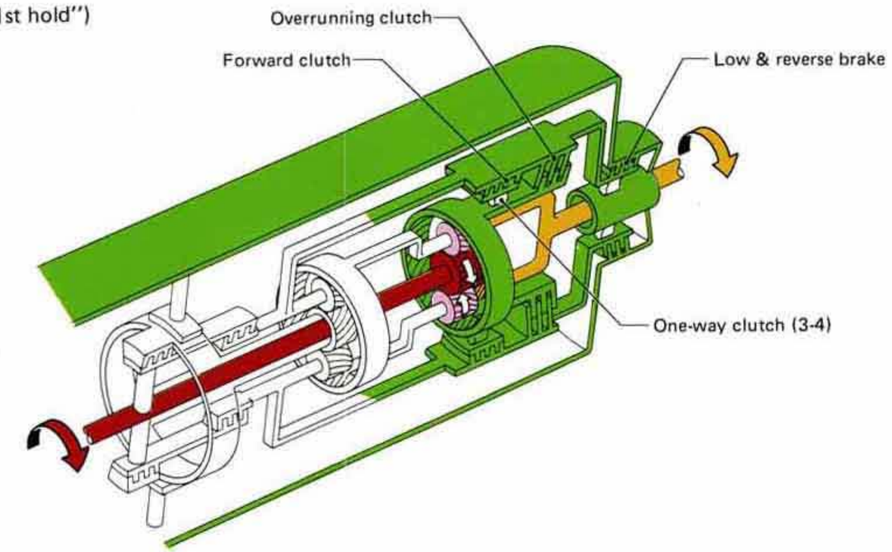

L3-1023

"N" and "P"

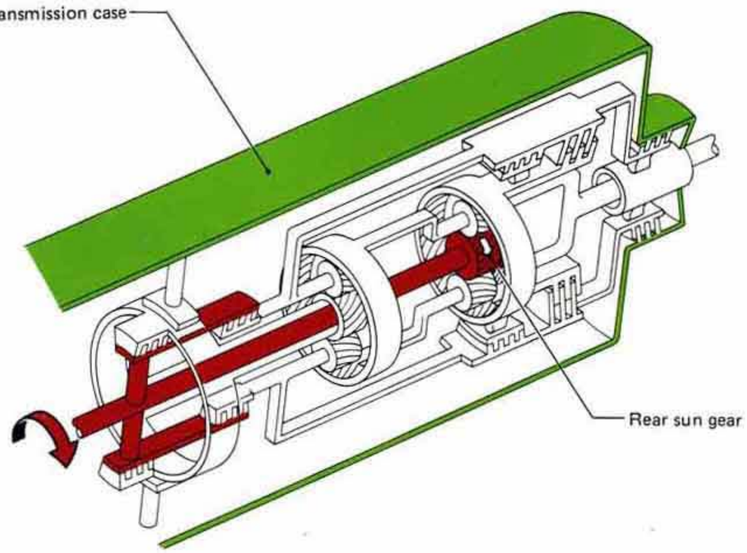

L3-1022

1st ("D" and "3")

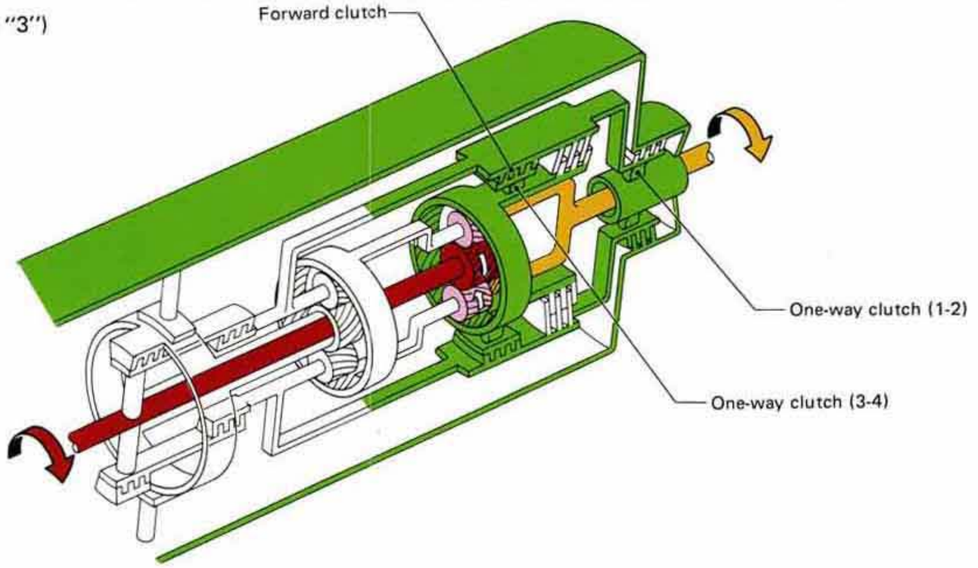

L3-1024

2nd ("D", "3", "2" and "1st hold")

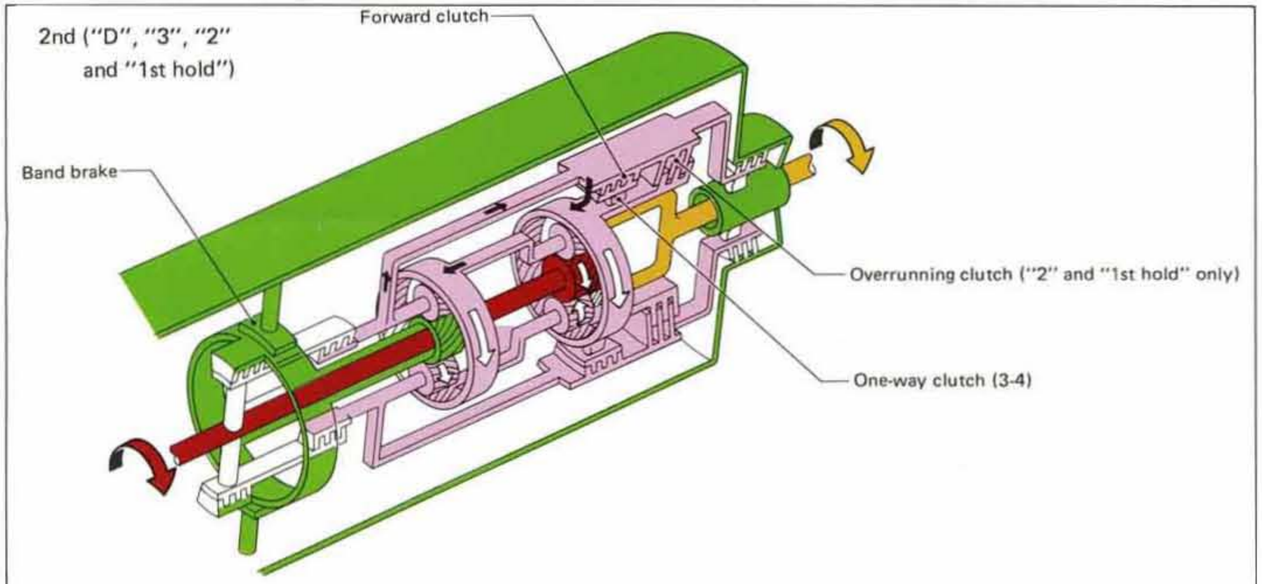

L3-1025

4th

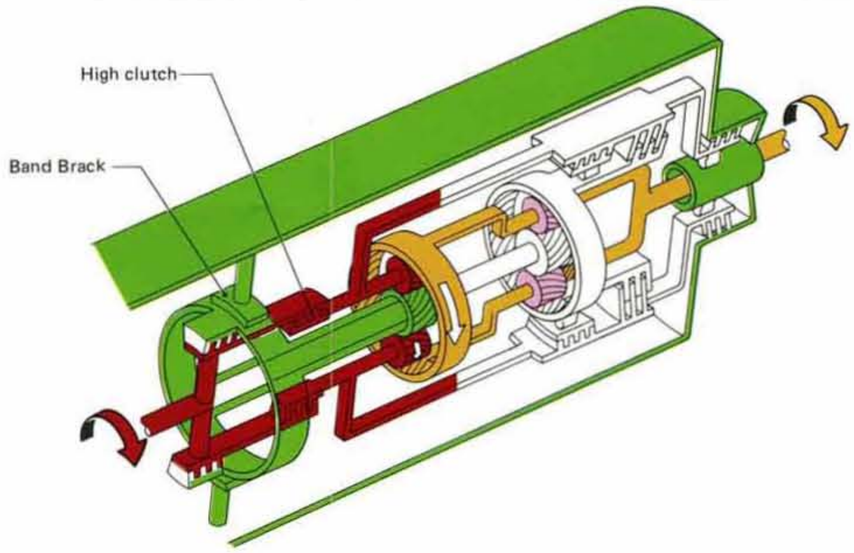

L3-1027

3rd ("D", "3", "2" and "1st hold")

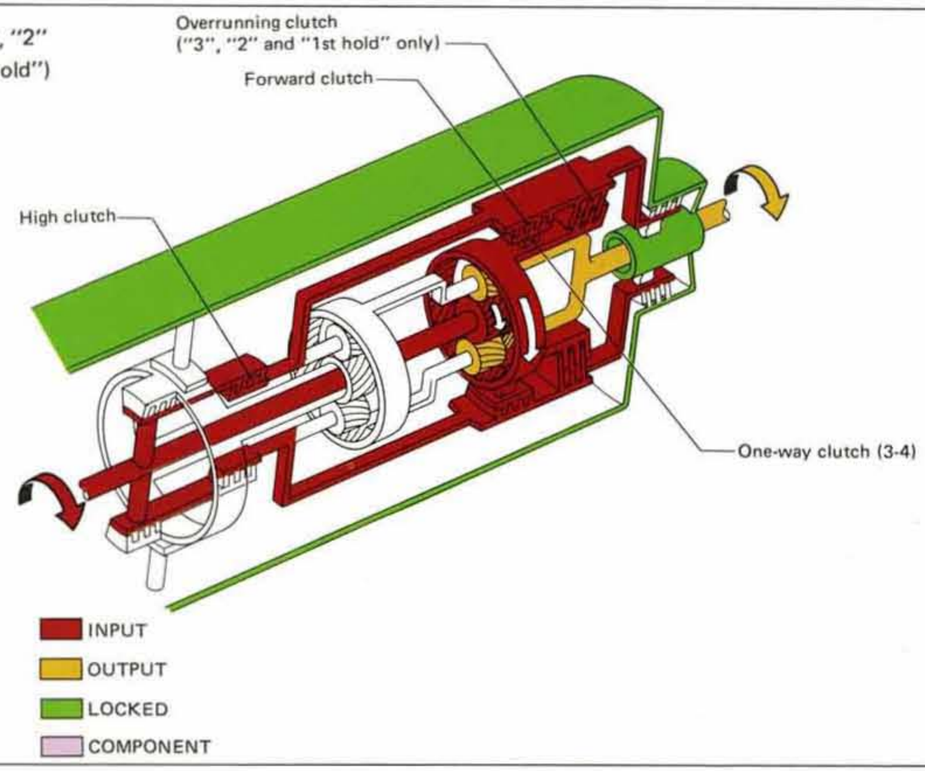

L3-1026

Rev.

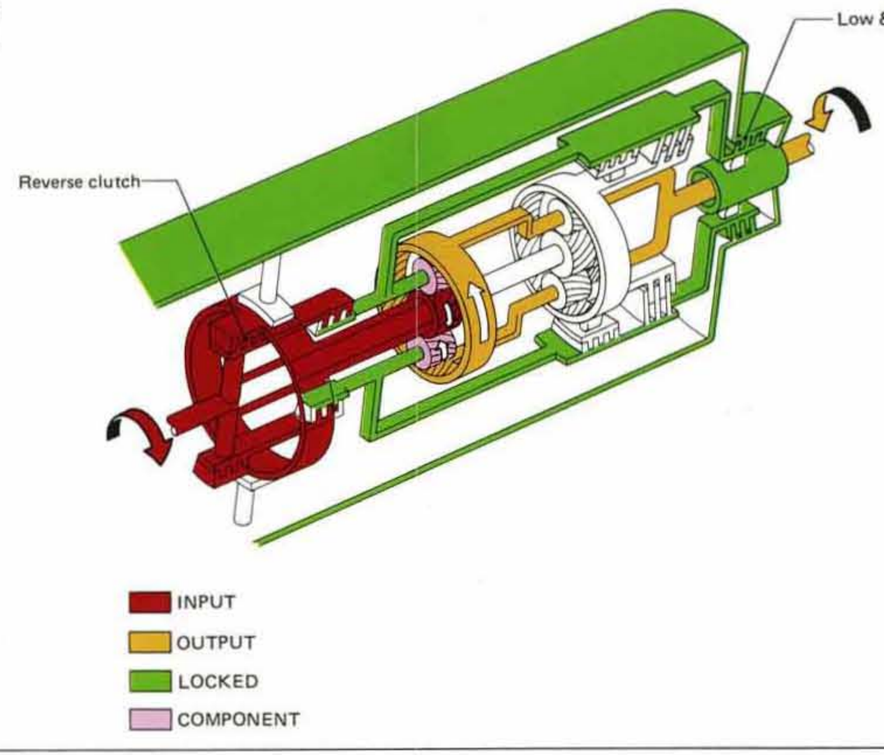

L3-1028

	1st	2nd	3rd	4th	Rev.
Input member	R_S	R_S	R_S F_C R_I	R_S F_C	R_S F_S
Output member	F_I R_C	F_I R_C	F_I R_C	F_I R_C	F_I R_C
Fixed member	F_C R_I	F_S		F_S	F_C
Free member	F_S	F_C R_I	F_S	R_I	R_I
Gear ratio	2.785	1.545	1.000	0.694	2.272

Abbr.

F_S	:	Front sun gear
R_S	:	Rear sun gear
F_C	:	Front planetary carrier
R_C	:	Rear planetary carrier
F_I	:	Front internal gear
R_I	:	Rear internal gear

L3-669

Fig. 90

4-2 Power Train

The gear train consists of two sets of planetary gears, four sets of multi-plate clutches, one brake band, one set of multi-plate brake and two sets of one-way clutches.

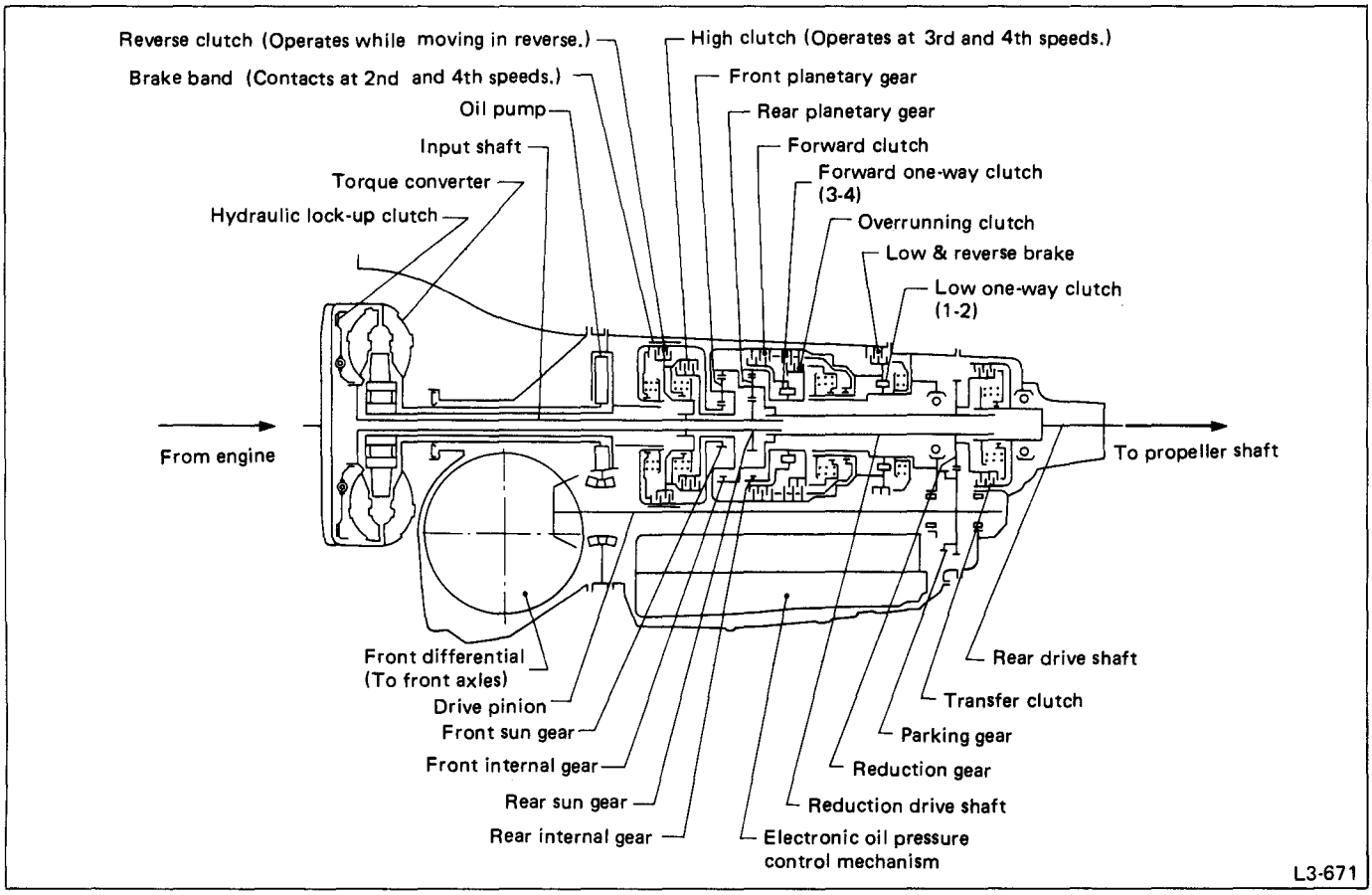

Fig. 91

1) N RANGE AND P RANGE

1) N range

Because both the forward clutch and reverse clutch are in the release positions, the power of the input shaft is not transmitted to the drive pinion or the rear drive shaft.

2) P range

All controls do not operate, just as in the N range. The parking pawl interlocked with the selector lever meshes with the parking gear to mechanically hold the output shaft stationary, thus locking the power train.

2) FIRST SPEED OF D OR 3 RANGE (D_1, 3_1)

- When the throttle is open wide, as during acceleration in the low-speed range, the forward clutch, one-way clutch (3-4) and one-way clutch (1-2) operate to prevent the rear internal gear from turning in the reverse direction.
- While coasting, the rear internal gear turns normally and the one-way clutch (3-4) is released and idles. Therefore, no power is transmitted and the engine does not provide braking action.

Operating condition of parts	Power flow (in acceleration)
• Forward clutch : Applied • One-way clutch (3-4) : Operating • One-way clutch (1-2) : Operating	• Input shaft ↓ • Rear sun gear ↓ • Rear pinion gear ↓ • Rear planetary carrier ↓ • Reduction gear ↓ • Drive pinion → • Front differential • Transfer clutch → • Rear differential

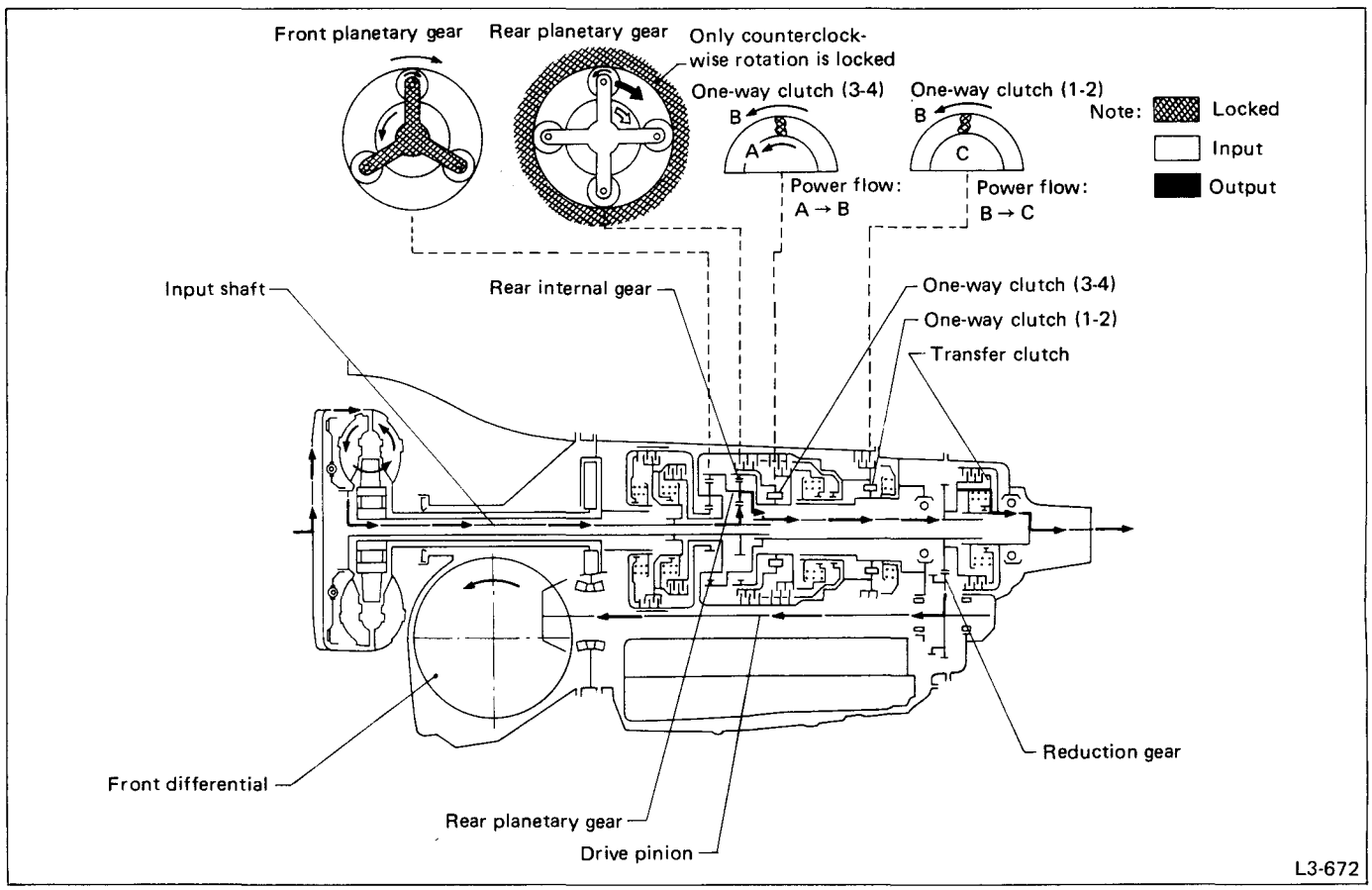

Fig. 92

3) SECOND SPEED OF D, 3, 2, OR 1ST HOLD RANGE (D_2, 3_2, 2_2, 1ST $HOLD_2$)

- During acceleration, the forward clutch is applied and connects the front planetary gear to the internal gear through the one-way clutch (3-4). Power is transmitted from the input shaft to the rear sun gear, turning the rear planetary carrier (i.e. front internal gear).
  Also, since the band brake is applied and the front sun gear is locked, the rear internal gear turns normally through the front planetary carrier and the forward clutch and one-way clutch (3-4) that are connected to that carrier. Thus, speed increases in proportion to the rotation of the rear internal gear compared with the first speed.
- Since the rear internal gear turns normally while coasting, the one-way clutch (3-4) is released and idles. Accordingly, reverse power is not transmitted to the engine and engine braking is not provided.
- During deceleration at "2" or "1st hold" range, the overrunning clutch operates to check idling of the one-way clutch (3-4). Reverse power is transmitted to the engine, providing engine braking action.

Operating condition of parts	Power flow (in acceleration)
• Brake band : Applied • Forward clutch : Applied • One-way clutch (3-4) : Operating • Overrunning clutch : Applied ("2" and "1st hold" ranges only)	Input shaft → Rear sun gear → Rear pinion gear → Rear planetary carrier → Reduction drive shaft → Reduction gear → Drive pinion → Front differential; Transfer clutch → Rear differential; Front internal gear → Front pinion gear → Front planetary carrier → Forward clutch → One-way clutch (3-4) → Rear internal gear → Rear pinion gear

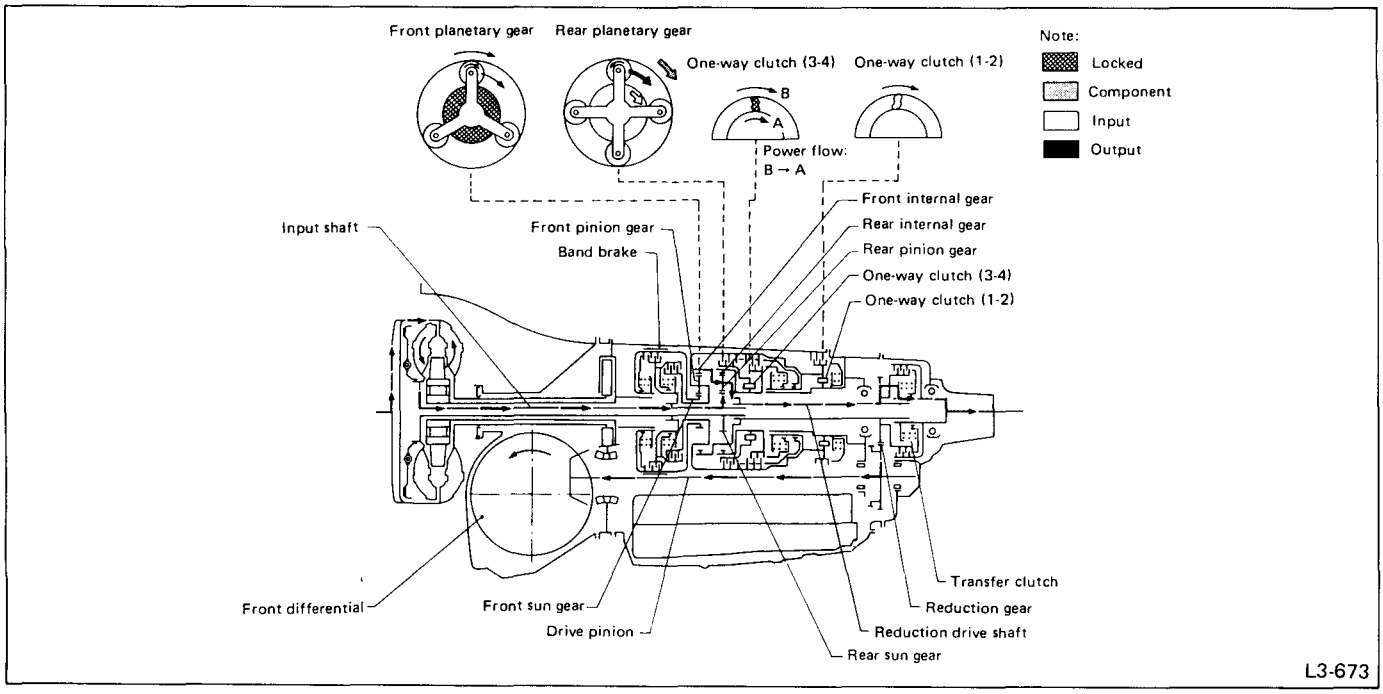

Fig. 93

4) THIRD SPEED OF D, 3, 2, OR 1ST HOLD RANGE (D_3, 3_3, 2_3, 1ST $HOLD_3$)

- During acceleration, the high clutch is applied and the input shaft and front planetary carrier are connected. Further, the forward clutch and one-way clutch (3-4) operate to connect the front planetary carrier to the rear internal gear. Power is transmitted from the input shaft to the rear sun gear and rear internal gear. The rear sun gear and rear internal gear turn normally at the same speed. Therefore, the rear planetary carrier, rear sun gear and rear internal gear rotate normally as a unit.
- While coasting at "D", because the rear internal gear turns normally, the one-way clutch (3-4) idles in a released state. Thus, reverse power is not transmitted to the engine and engine braking action is not provided.
- During deceleration, at "3", "2" or "1st hold" range, the overrunning clutch is applied and checks the reverse rotation of the one-way clutch (3-4).
  Thus, reverse power is transmitted to the engine and engine braking is performed.

Operating condition of parts	Power flow (in acceleration)
• High clutch : Applied • Forward clutch : Applied • One-way clutch (3-4) : Operating • Overrunning clutch : Applied ("3", "2" and "1st hold" ranges only)	Input shaft High clutch → Front planetary carrier → Forward clutch → One-way clutch (3-4) → Rear internal gear Rear sun gear → Rear pinion gear → Rear planetary carrier → Reduction gear Drive pinion → Front differential Transfer clutch → Rear differential

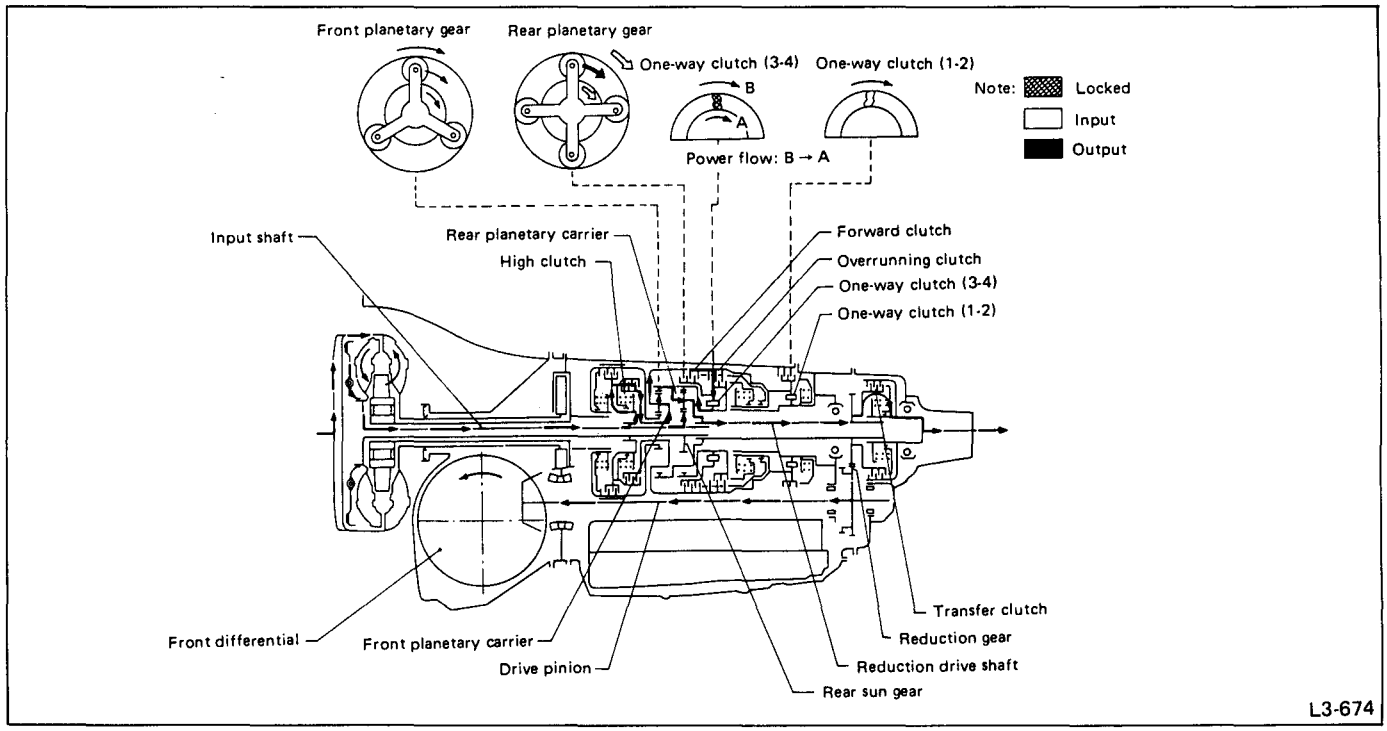

Fig. 94

5) D-RANGE FOURTH SPEED (D_4)

- During acceleration, the high clutch is applied and connects the input shaft to the front planetary carrier. Also, the forward clutch is applied, but it runs idle due to the one-way clutch (3-4) and takes no part in power transmission. Power is transmitted from the input shaft to the front planetary carrier by the function of the high clutch.

  When the front planetary carrier turns normally, because the front sun gear is held stationary by the brake band, the speed of the front internal gear increases and is delivered to the meshing reduction drive shaft in normal rotation.
- While coasting, because power transmission does not go through the one-way clutch, reverse power is transmitted to the engine and engine braking is performed.

Operating condition of parts	Power flow (in acceleration)
• High clutch : Applied • Brake band : Contracted • Forward clutch : Applied (Takes no part in power transmission.)	• Input shaft ↓ • High clutch ↓ • Front planetary carrier ↓ • Front pinion gear ↓ • Front internal gear ↓ • Rear planetary carrier ↓ • Reduction drive shaft ↓ • Reduction gear ↓ ↓ • Drive pinion → • Front differential • Transfer clutch → • Rear differential

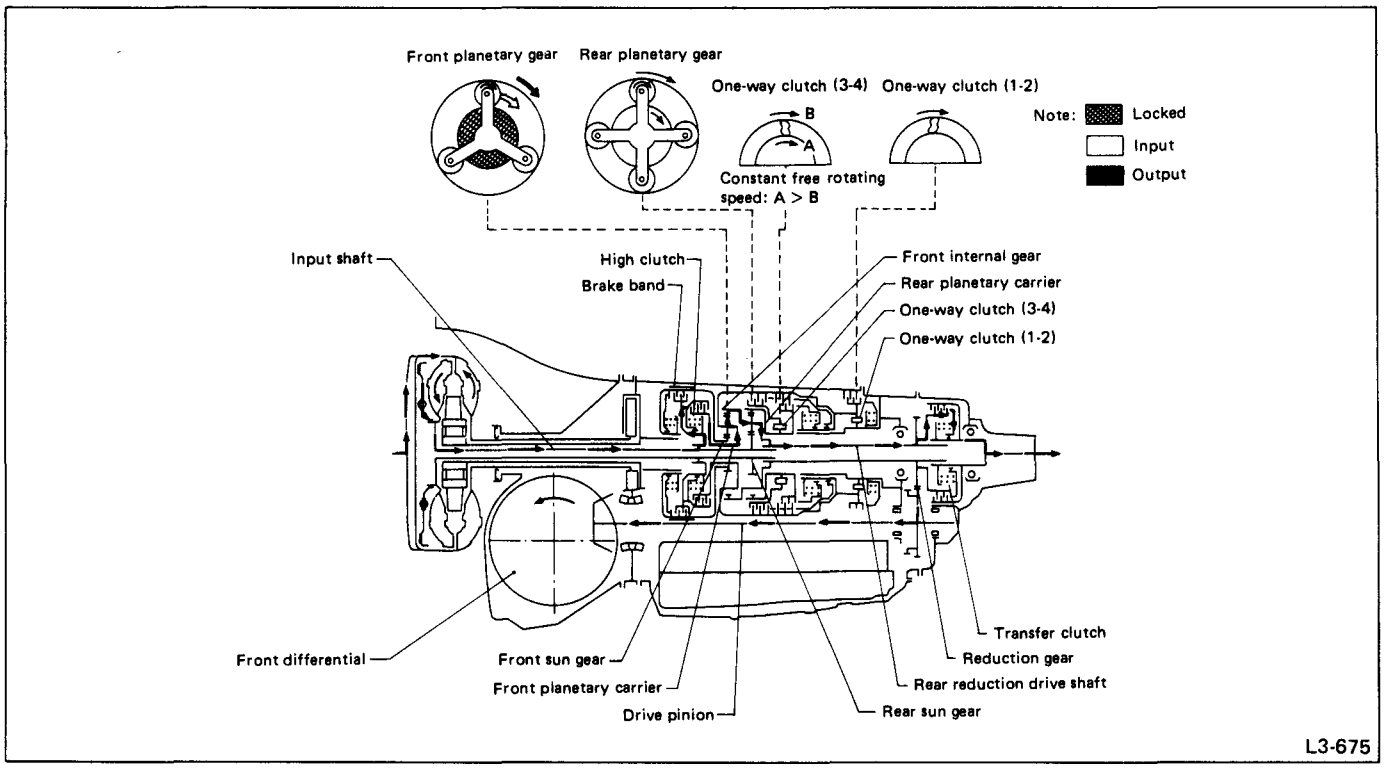

Fig. 95

6) 2-RANGE FIRST SPEED OR 1ST HOLD FIRST SPEED (2_1, 1ST HOLD)

- During acceleration, the forward clutch and overrunning clutch are applied and the front planetary carrier and rear internal gear are connected. Also, the low & reverse brake is applied so that the front planetary carrier and internal gear remain stationary.
  The power flow is the same as in the first speed of "D", "3" and "2" range (except for the following points) and engine braking is performed.
  - The low & reverse brake operates in place of the one-way clutch (1-2) and locks the rear internal gear.
- In coasting and deceleration, low & reverse brake and overrunning clutch are operating, so that reverse power is transmitted to the engine and engine braking action is provided.

Operating condition of parts	Power flow (in acceleration)
• Forward clutch : Applied • One-way clutch (3-4) : Applied (in acceleration) • Overrunning clutch : Applied • Low & reverse brake : Operating	• Input shaft ↓ • Rear sun gear ↓ • Rear pinion gear ↓ • Rear planetary carrier ↓ • Reduction gear ↓ ↓ • Drive pinion → • Front differential • Transfer clutch → • Rear differential

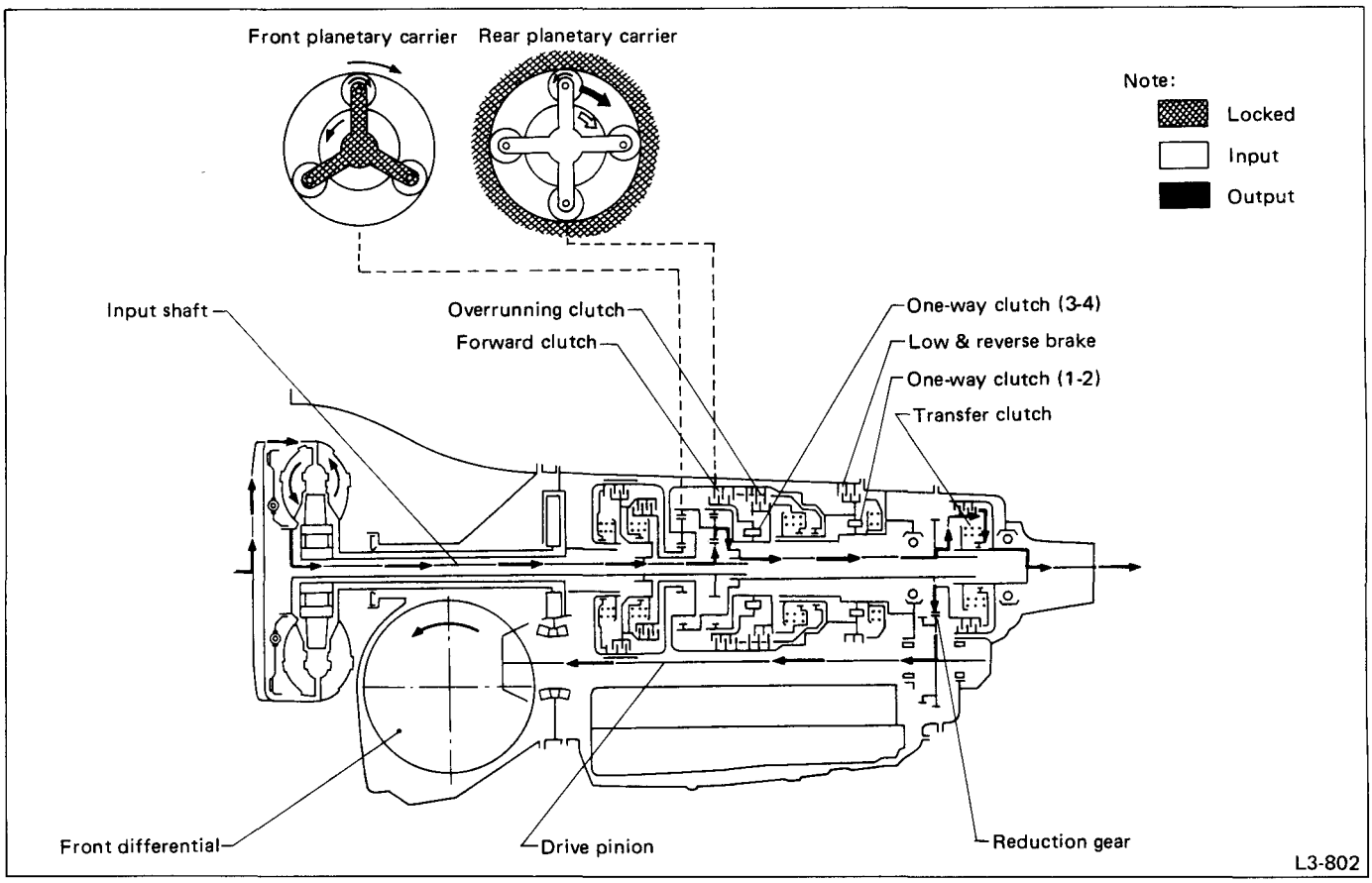

Fig. 96

7) R RANGE

The reverse clutch is applied and power is transmitted from the input shaft through the reverse clutch to the front sun gear. Also, the low & reverse brake operates to lock the front planetary carrier. Therefore, when the front sun gear turns normally, the front internal gear slows and reverses.

Operating condition of parts	Power flow
• Reverse clutch : Applied • Low & reverse brake : Operating	• Input shaft ↓ • Reverse clutch ↓ • Front sun gear ↓ • Front pinion gear ↓ • Front internal gear ↓ • Reduction drive shaft ↓ • Reduction gear ↓ • Drive pinion → • Front differential • Transfer clutch → • Rear differential

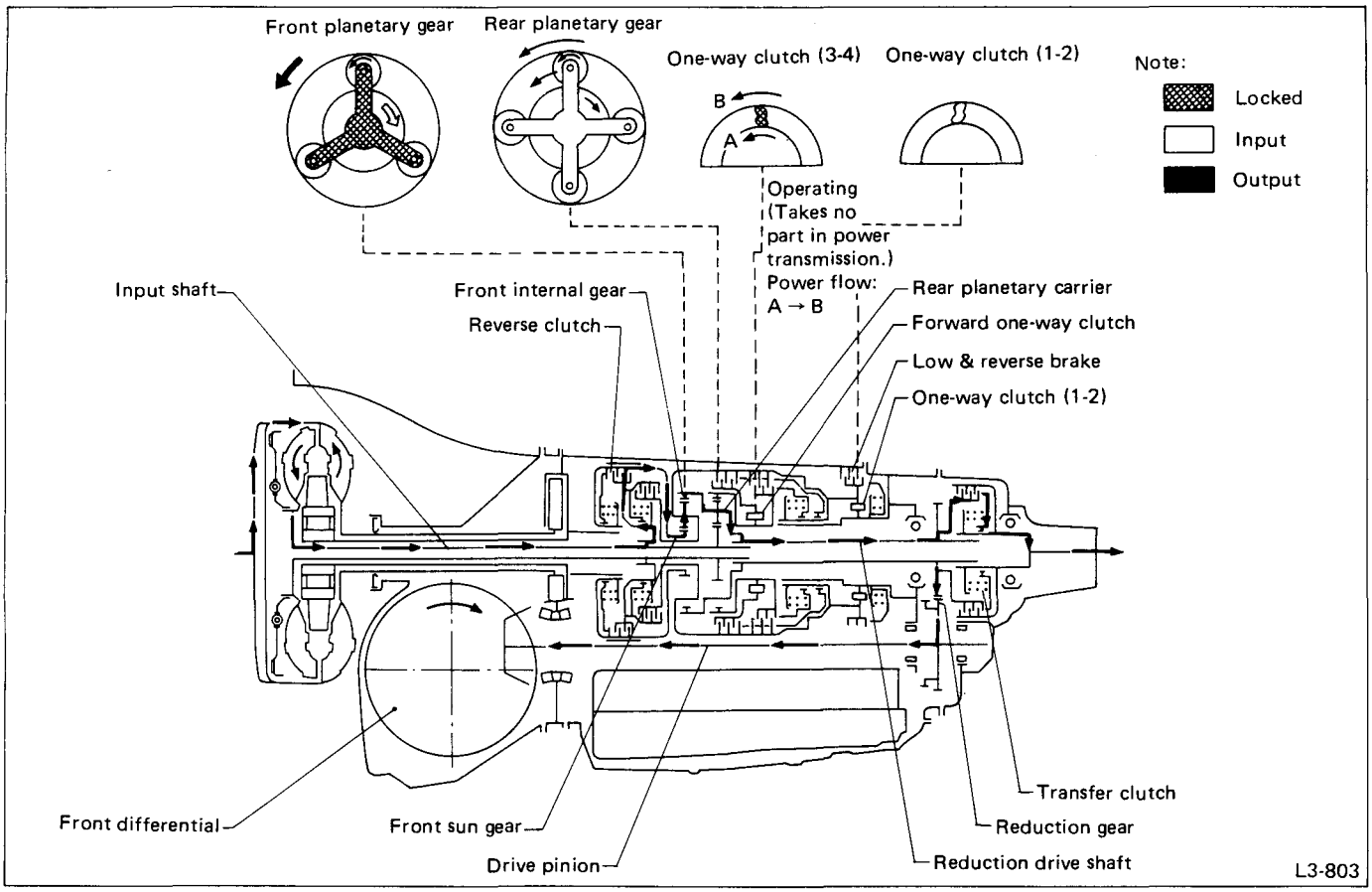

Fig. 97

5 Fluid Passages

Oil pump housing

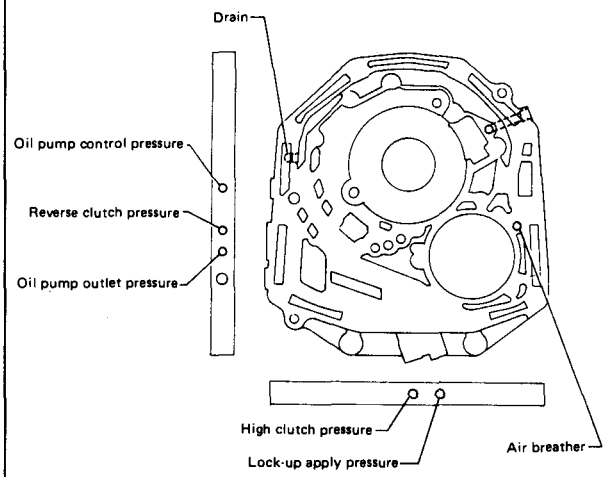

Oil pump cover

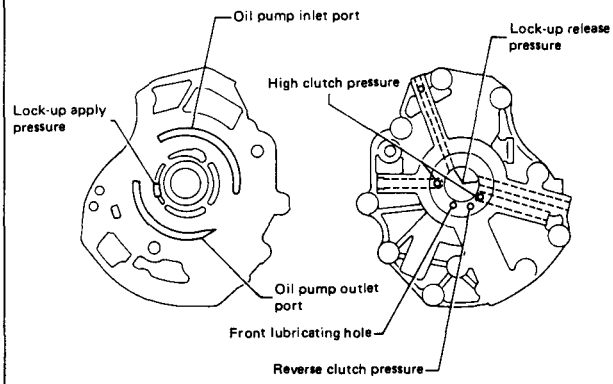

Transmission case

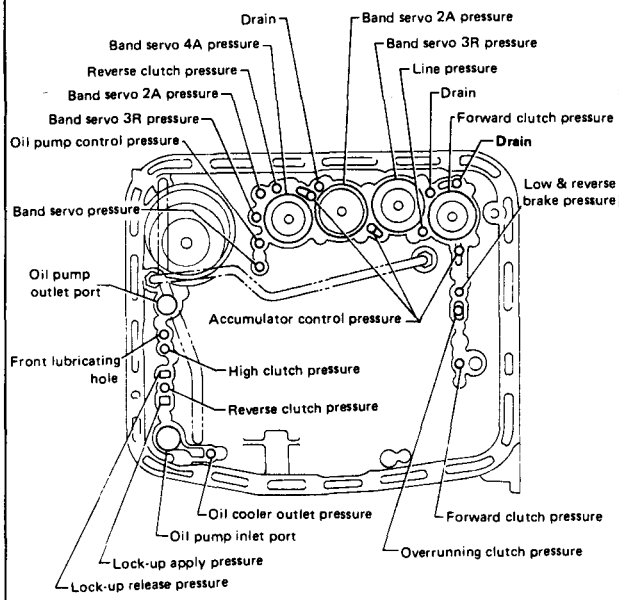

Transmission case LH side

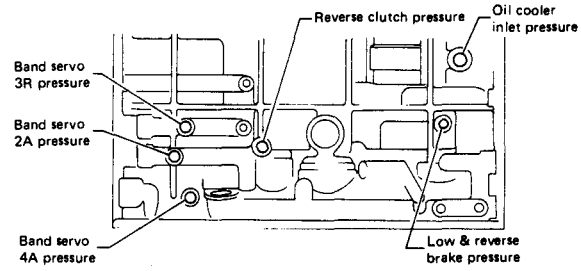

Transmission case RH side

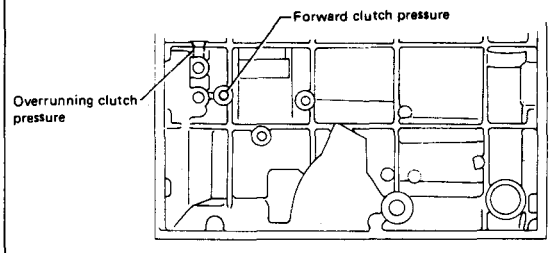

L3-950

Fig. 98

1 P range and N range

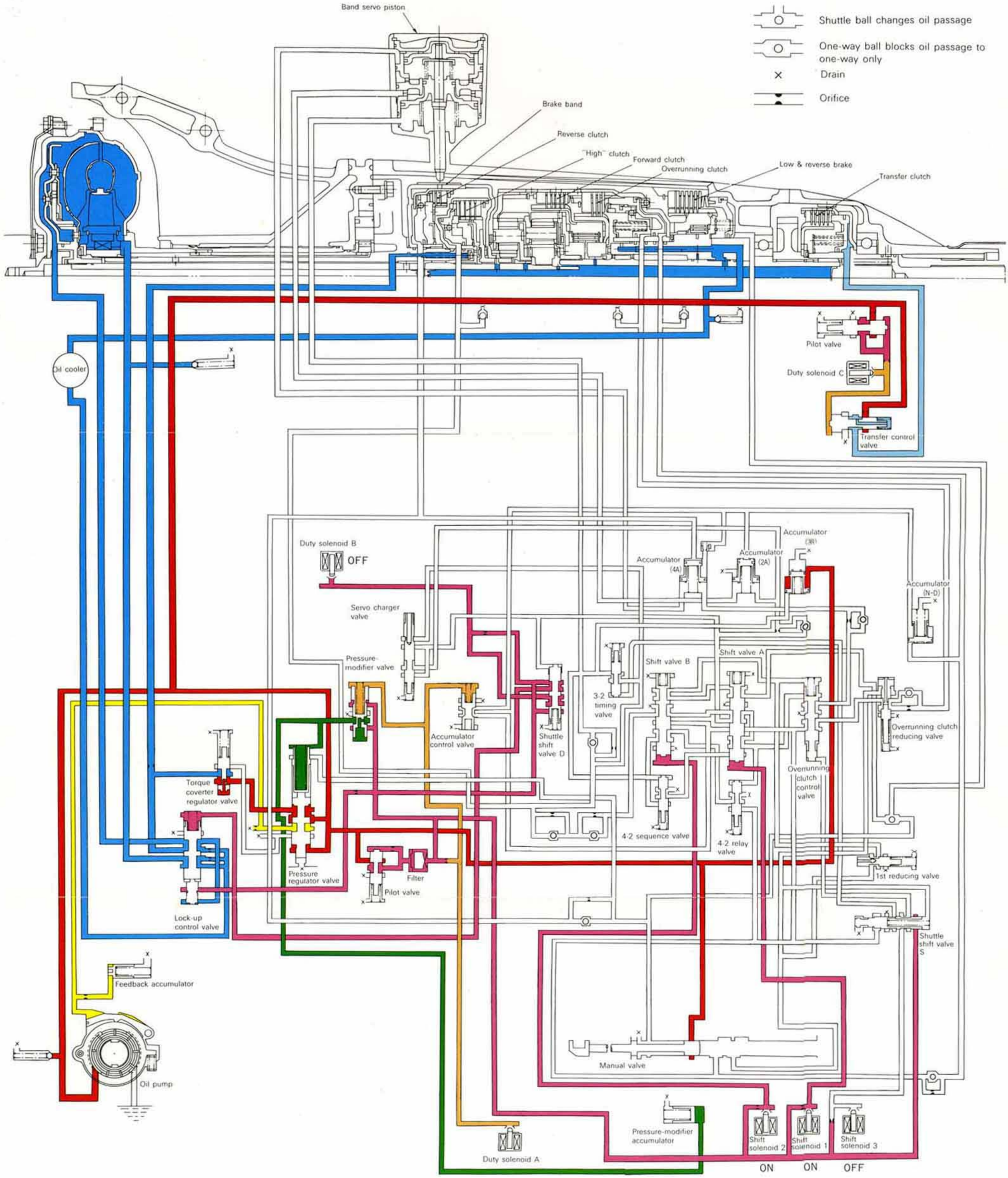

Location of manual valve differs for N and P ranges.

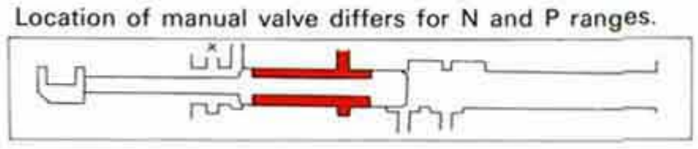

2 R range

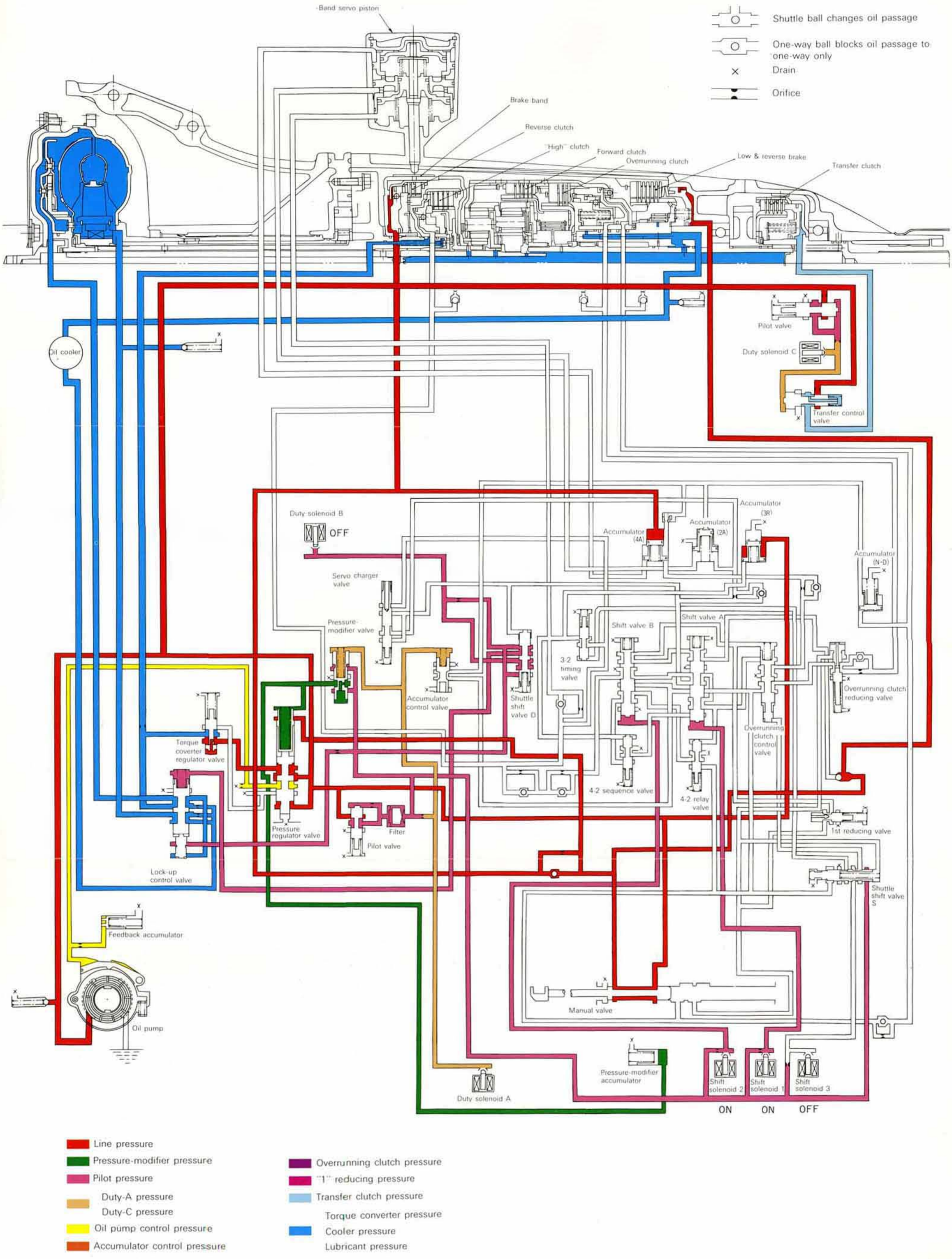
Band servo piston
Brake band
Reverse clutch
"High" clutch
Forward clutch
Overrunning clutch
Low & reverse brake
Transfer clutch
Shuttle ball changes oil passage
One-way ball blocks oil passage to one-way only
Drain
Orifice
Oil cooler
Pilot valve
Duty solenoid C
Transfer control valve
Duty solenoid B
OFF
Accumulator (4A)
Accumulator (2A)
Accumulator (3R)
Accumulator (N-D)
Servo charger valve
Pressure-modifier valve
Accumulator control valve
Shuttle shift valve D
3-2 timing valve
Shift valve B
Shift valve A
Overrunning clutch reducing valve
Overrunning clutch control valve
Torque converter regulator valve
Pressure regulator valve
Filter
Pilot valve
4-2 sequence valve
4-2 relay valve
1st reducing valve
Lock-up control valve
Shuttle shift valve S
Feedback accumulator
Manual valve
Oil pump
Pressure-modifier accumulator
Duty solenoid A
Shift solenoid 2
Shift solenoid 1
Shift solenoid 3
ON
ON
OFF
Line pressure
Pressure-modifier pressure
Pilot pressure
Duty-A pressure
Duty-C pressure
Oil pump control pressure
Accumulator control pressure
Overrunning clutch pressure
"1" reducing pressure
Transfer clutch pressure
Torque converter pressure
Cooler pressure
Lubricant pressure

3 First speed of D or 3 range

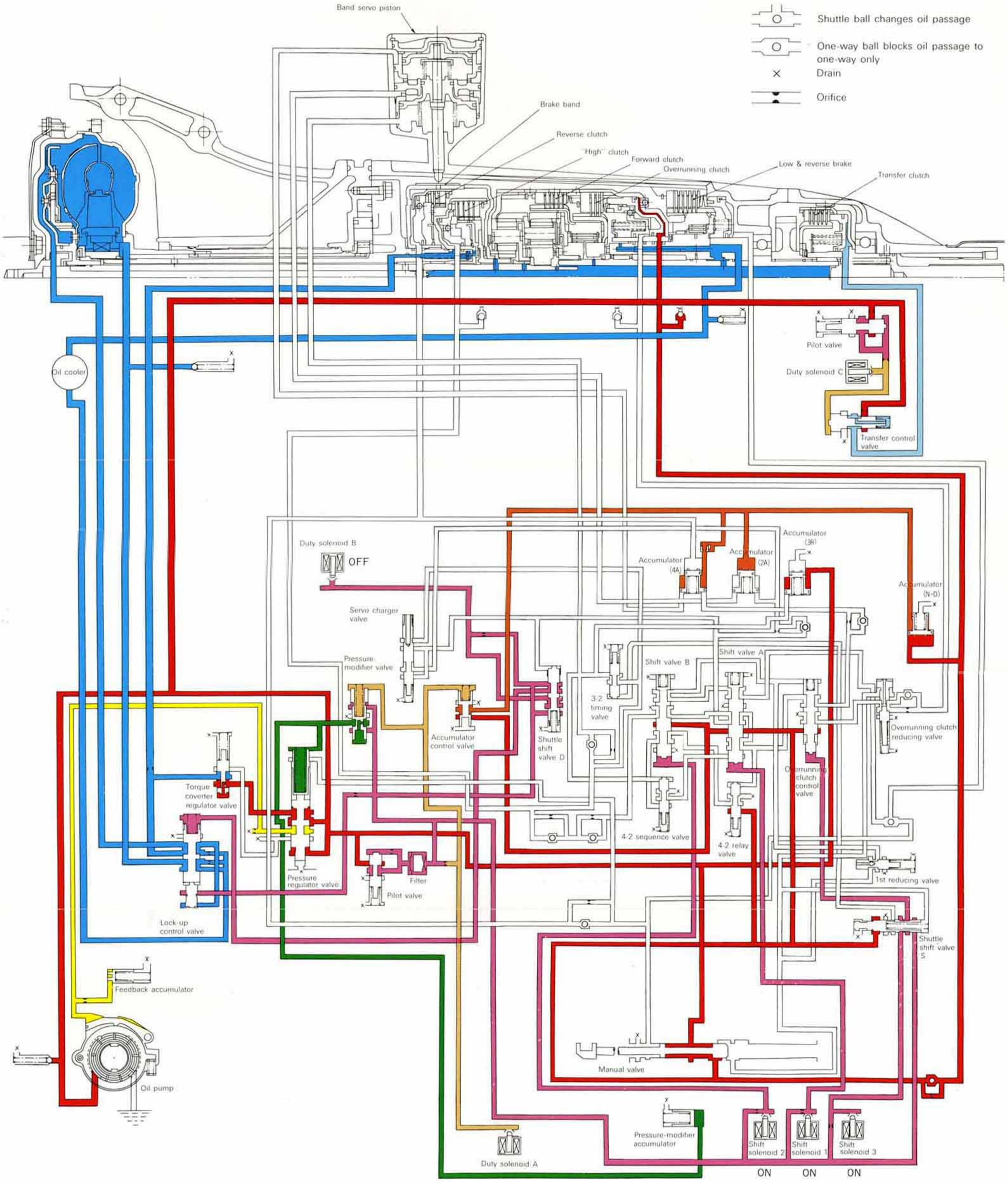

Location of manual valve differs for 3 and D ranges.

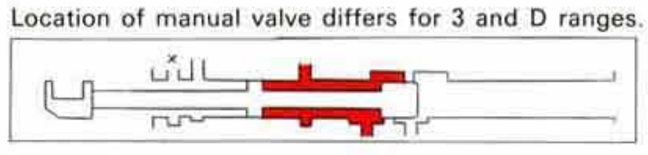

3-2 73d

4 Second speed of D or 3 range

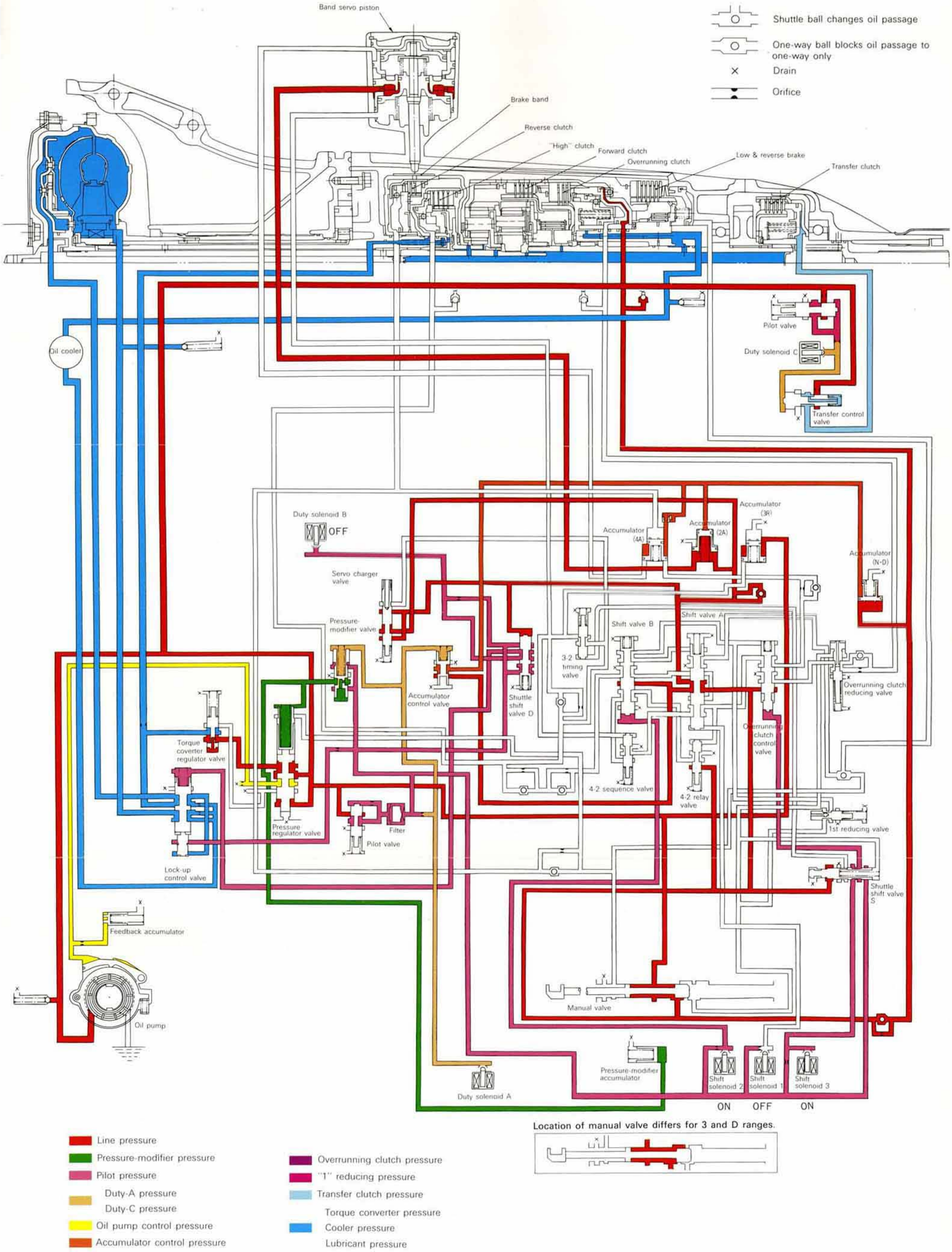

Location of manual valve differs for 3 and D ranges.

5 Second speed of D or 3 range at lock-up

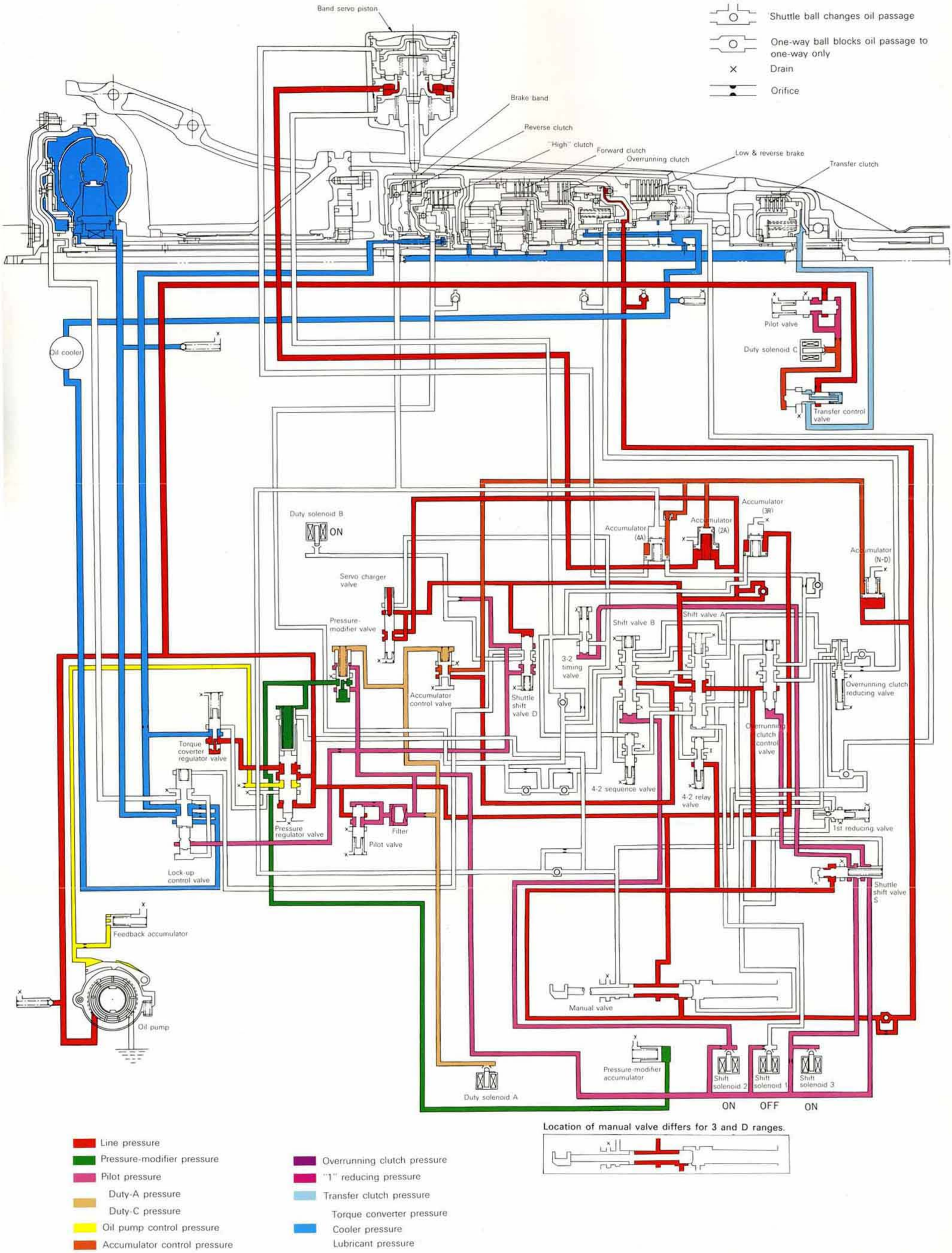

Location of manual valve differs for 3 and D ranges.

6 Third speed of D or 3 range

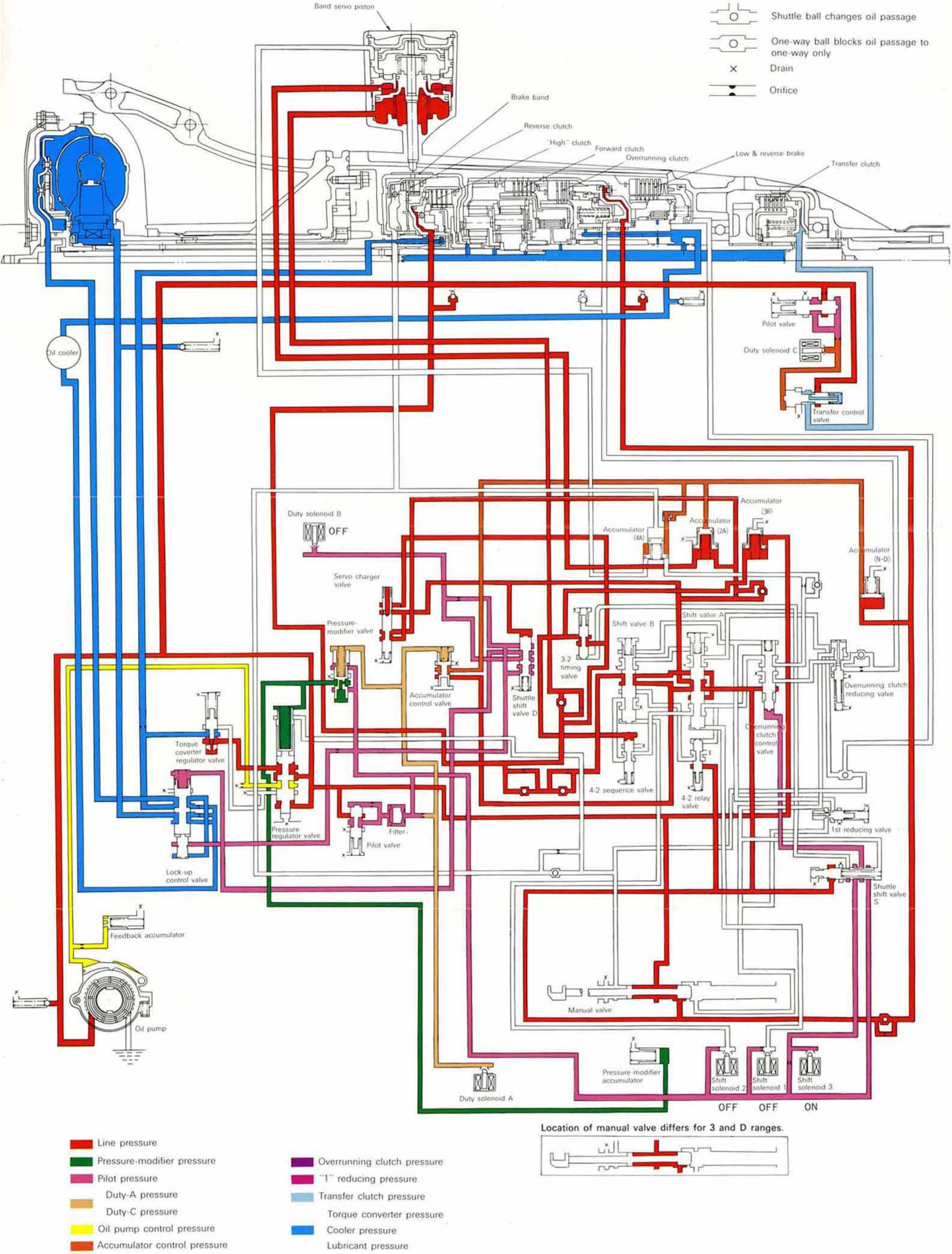

Location of manual valve differs for 3 and D ranges.

- Line pressure
- Pressure-modifier pressure
- Pilot pressure
- Duty-A pressure
- Duty-C pressure
- Oil pump control pressure
- Accumulator control pressure
- Overrunning clutch pressure
- "1" reducing pressure
- Transfer clutch pressure
- Torque converter pressure
- Cooler pressure
- Lubricant pressure

7 Third speed of D or 3 range at lock-up

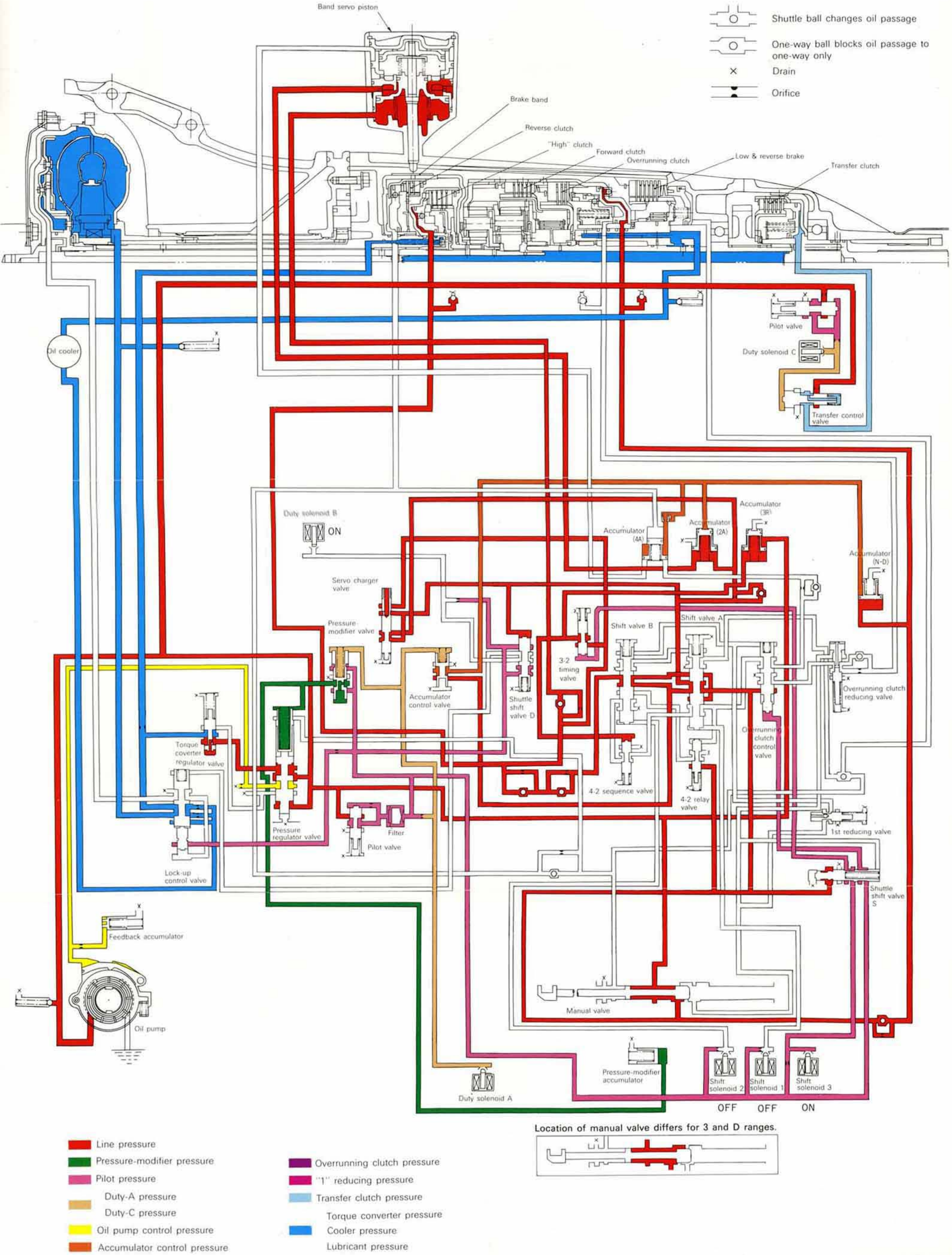

Location of manual valve differs for 3 and D ranges.

8 D range fourth speed

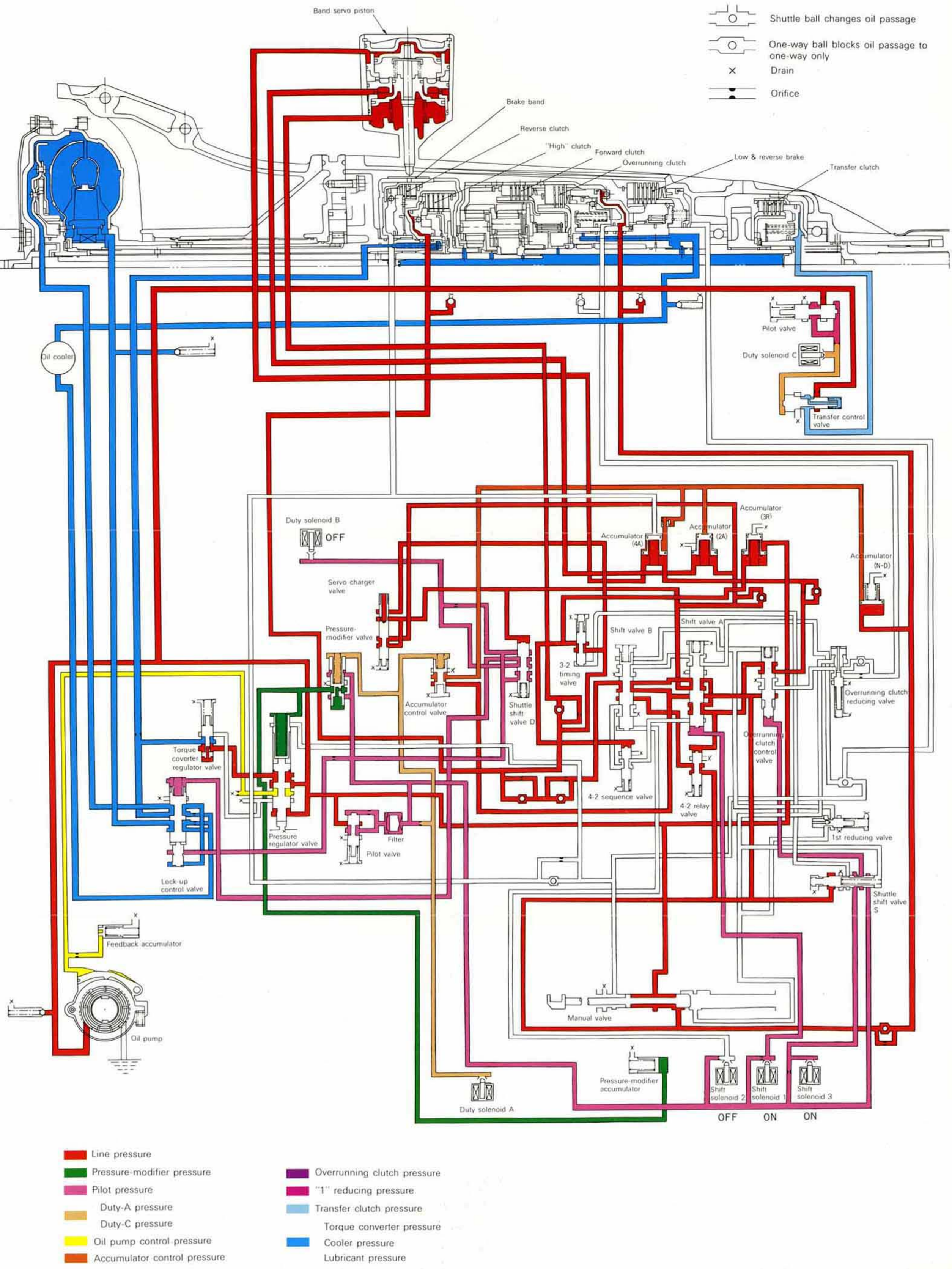

9 D range fourth speed at lock-up

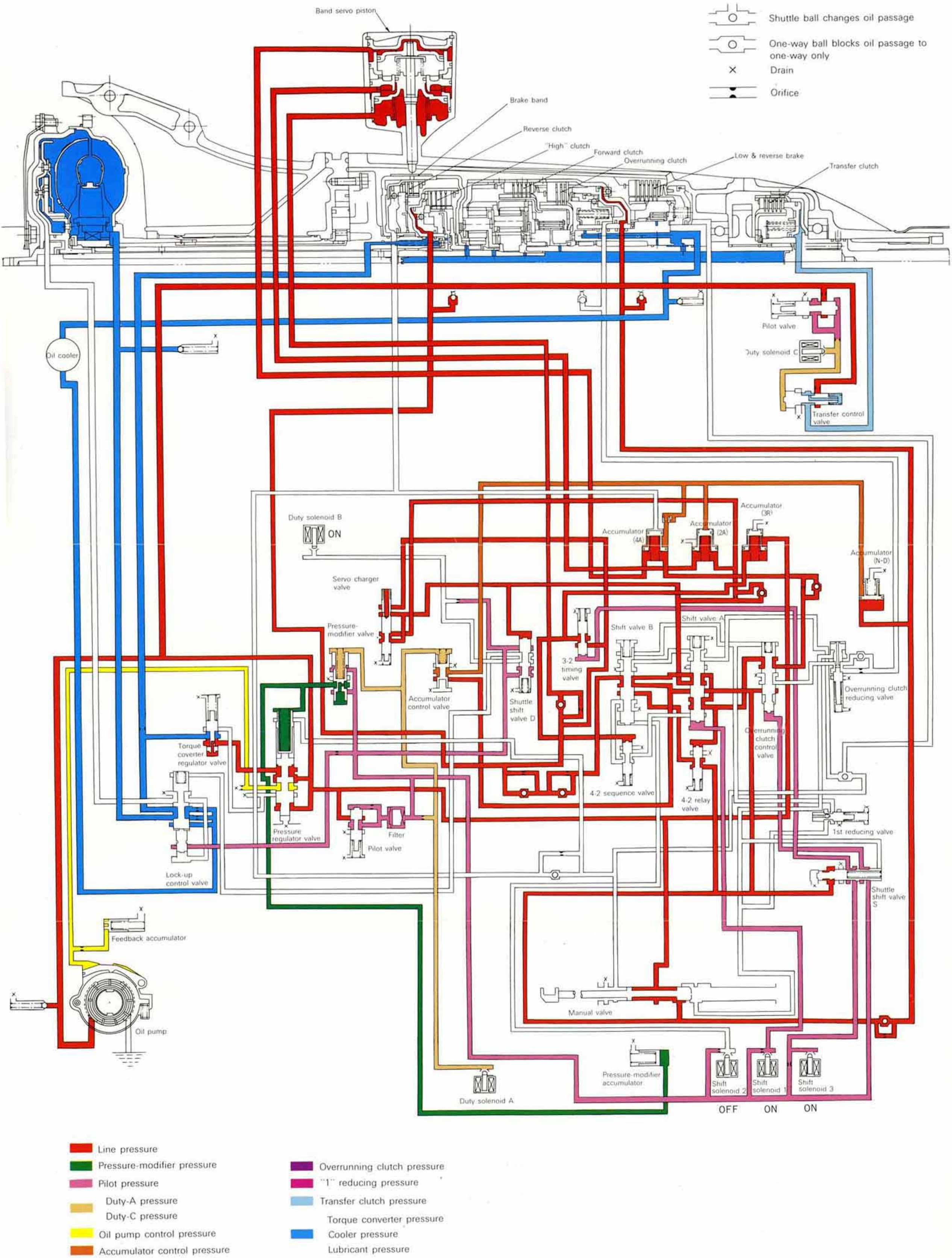

10 First speed of 2 range or 1st hold range

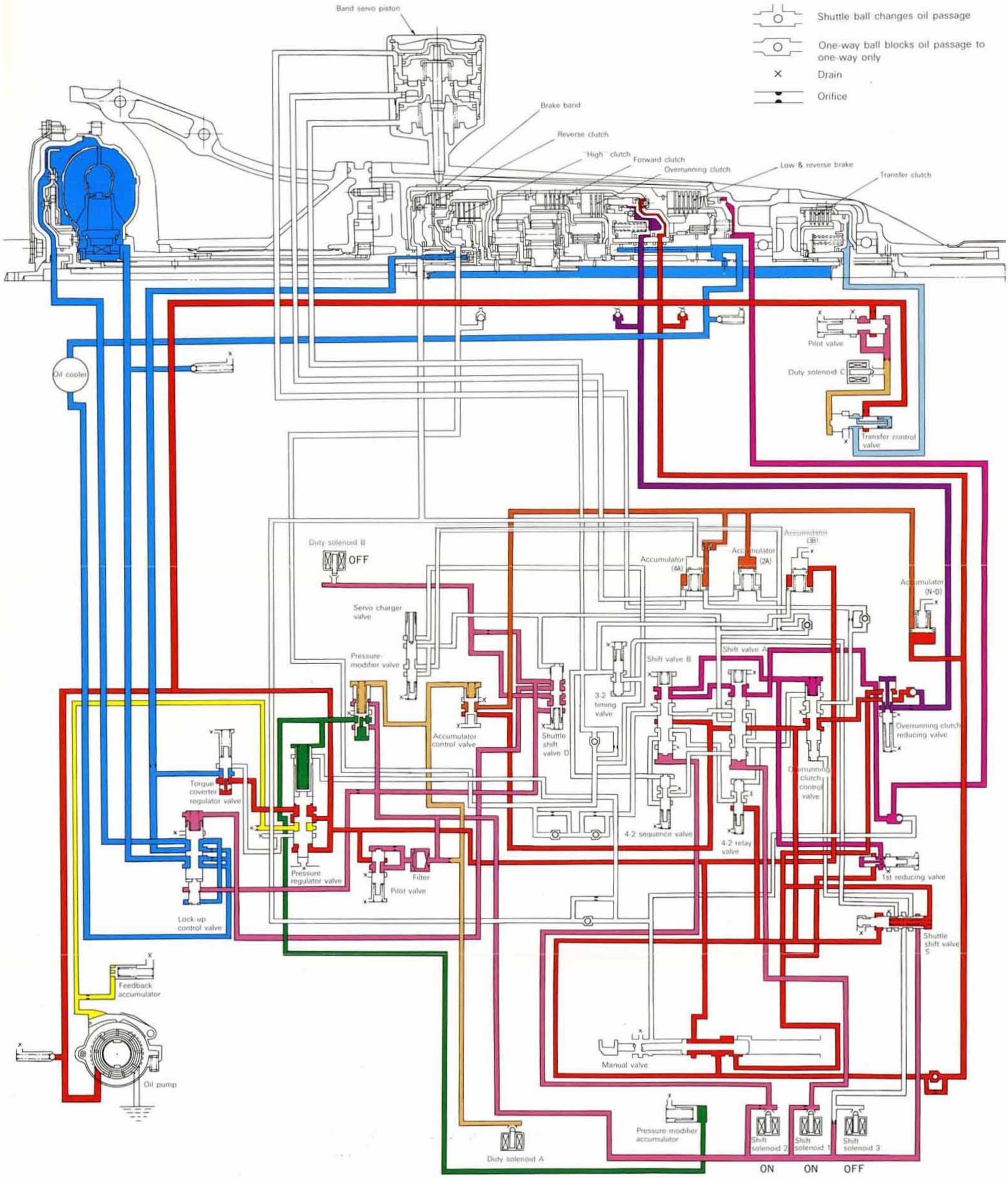

11 Second speed of 2 range or 1st hold at lock-up

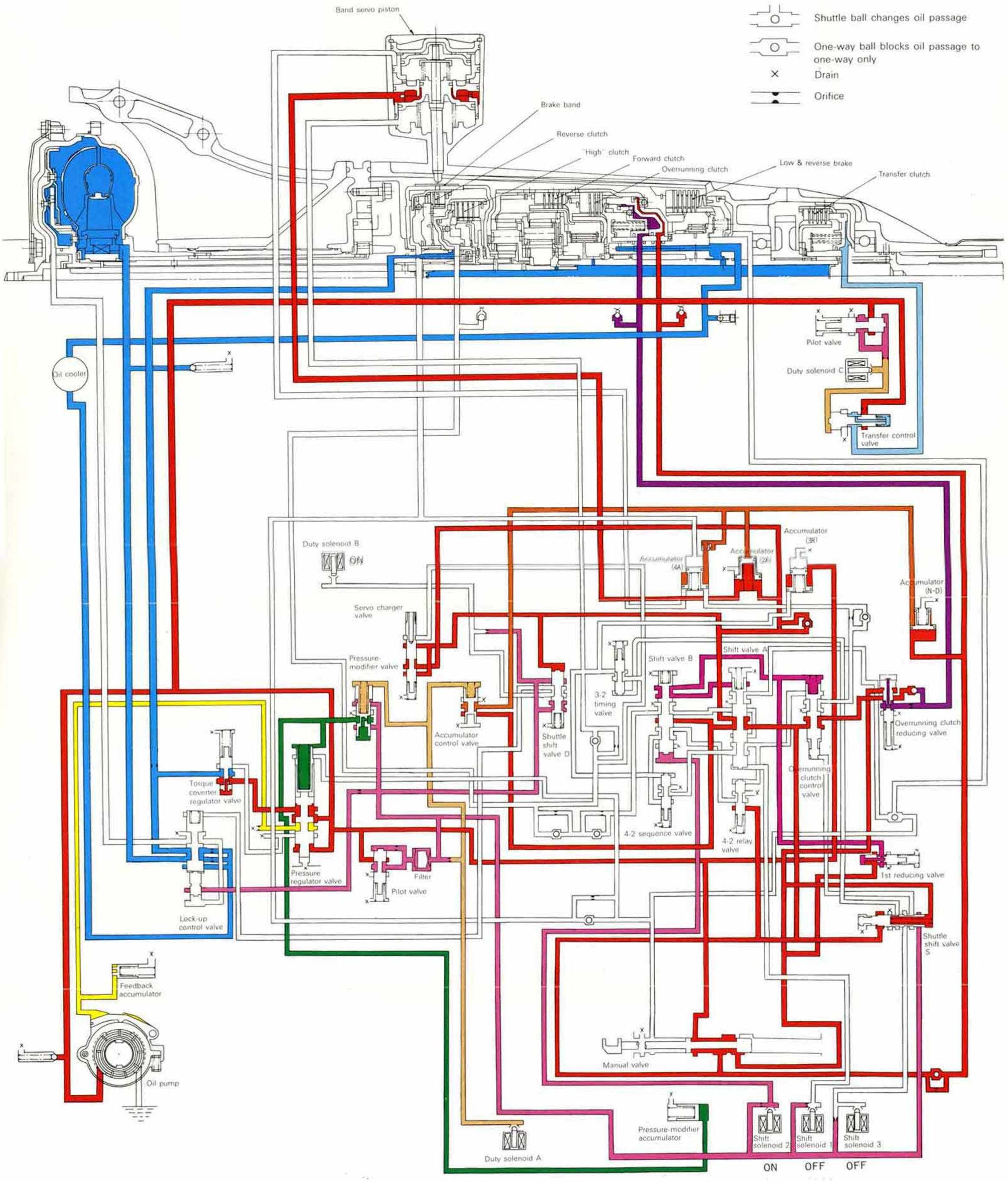

12 Third speed of 2 range or 1st hold at lock-up

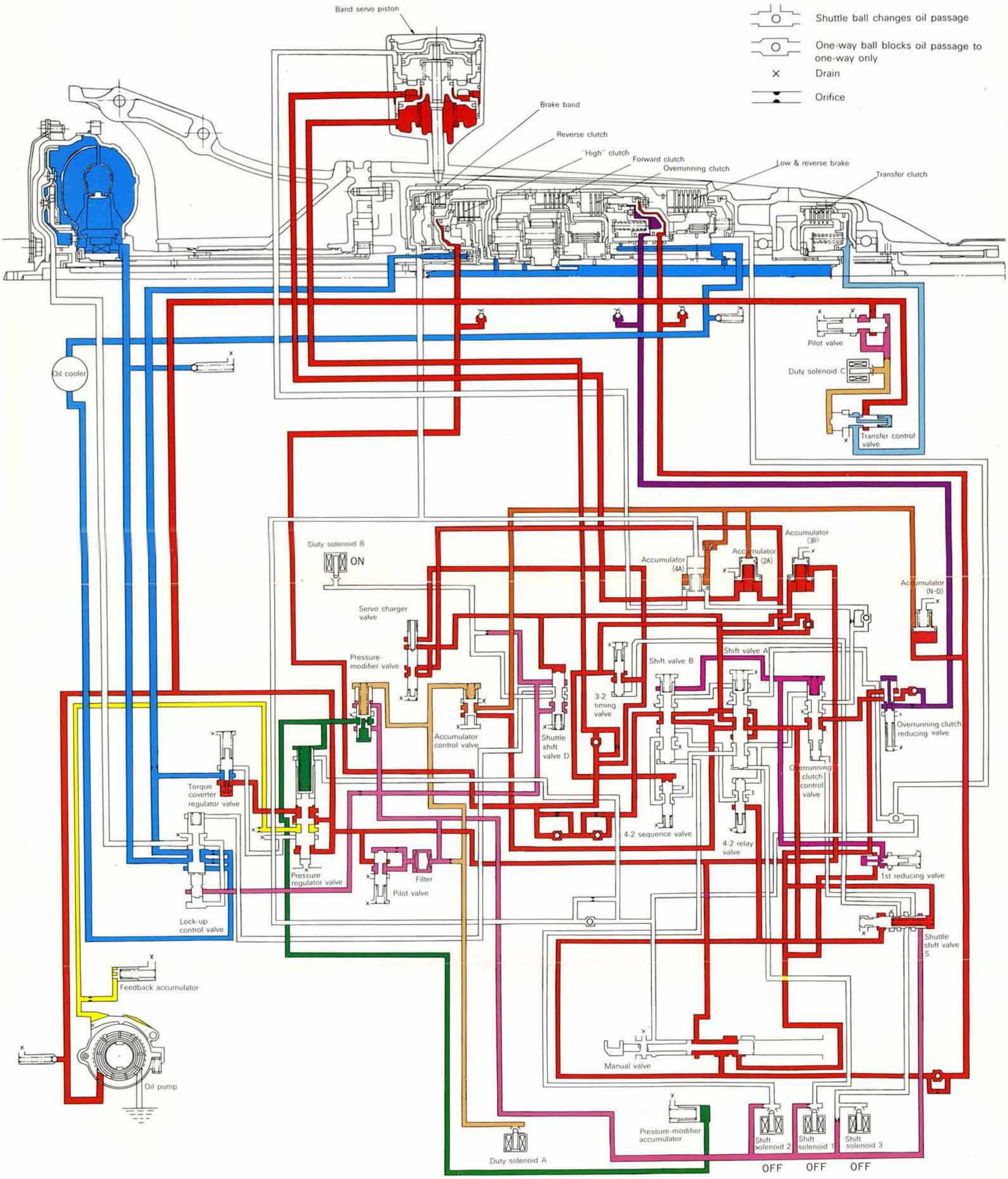

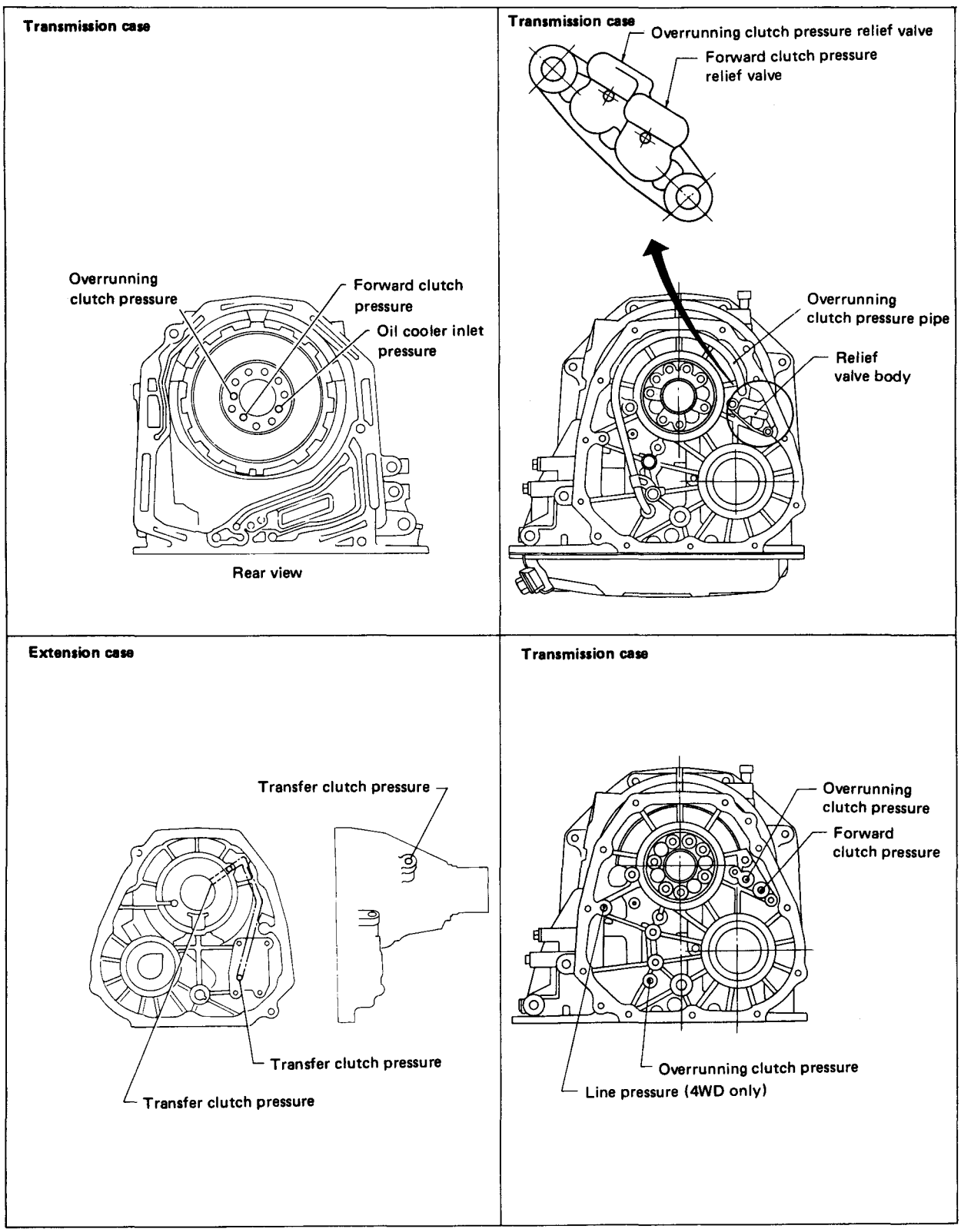

L3-951

Fig. 99 Transmission case

6 Range Select Mechanism

The range select mechanism consists of a select lever (on the floor/center console in the driver's compartment), push-pull cable, linkages, manual valve, parking pawl, etc.
When the select lever is moved either forward or backward, the push-pull cable moves in the corresponding direction. This turns the manual shaft by way of the range select lever. At this point, the pin at the end of the range select lever turns the inhibitor switch arm to transmit a range signal to the control unit.

A manual plate and manual lever are attached to the manual shaft. The manual plate is fan-shaped and is provided with six grooves on its edge corresponding to shift ranges (from "P" to "2"). A detent spring roller fits into the groove corresponding to the range selected. This regulates effort required to operate the select lever.
A hydraulically controlled manual valve is installed on the lower pin of the manual lever. It slides in response to rotation of the manual shaft, thereby selecting an oil passage inside the lower valve body in response to the position (P, R, N, D, 3 or 2) of the select lever.
A parking rod located on the upper portion of the lever mechanically holds the output shaft when the select lever is shifted to "P".

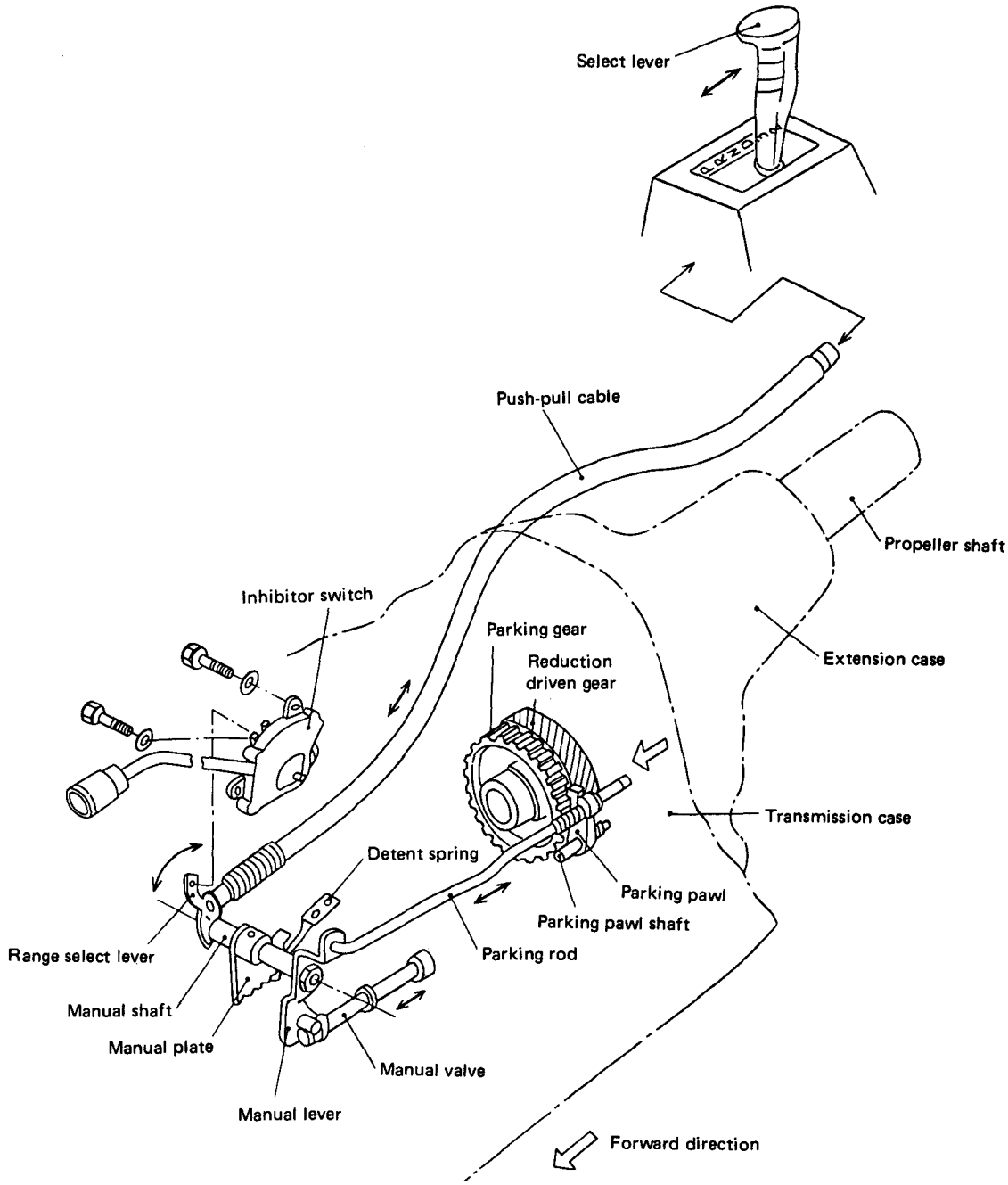

Fig. 100

7 Parking Mechanism

The end of the parking pawl engages mechanically with the gear groove of the parking gear. This gear is spline-fitted to the drive pinion shaft.
When the select lever is set to "P", the manual lever connected to the manual shaft turns, moving the parking rod backward. A cam and spring are installed on the rear of the parking rod. The parking cam slides freely on the parking rod. The parking rod and cam contact the "V" groove of the actuator (secured to the transmission case) and the back of the parking pawl.

With this arrangement, when the parking rod moves backward, the cam moves to the back of the parking pawl and the "V" groove of the actuator. The parking pawl turns in the direction of the parking gear using the parking pawl shaft as a pivot. It then engages with the parking gear groove.
If the end of the parking pawl rides over the tooth of the parking gear so that the parking cam does not move midway between the pawl and actuator, the parking rod will move to "P". This compresses the parking spring so that the parking cam is ready to move to "P". Under this condition, if the vehicle moves slightly, the parking gear will rotate to engage the pawl completely.
Except for the P range, the parking pawl is tensed by the parking pawl return spring in the direction that moves away from the parking gear.

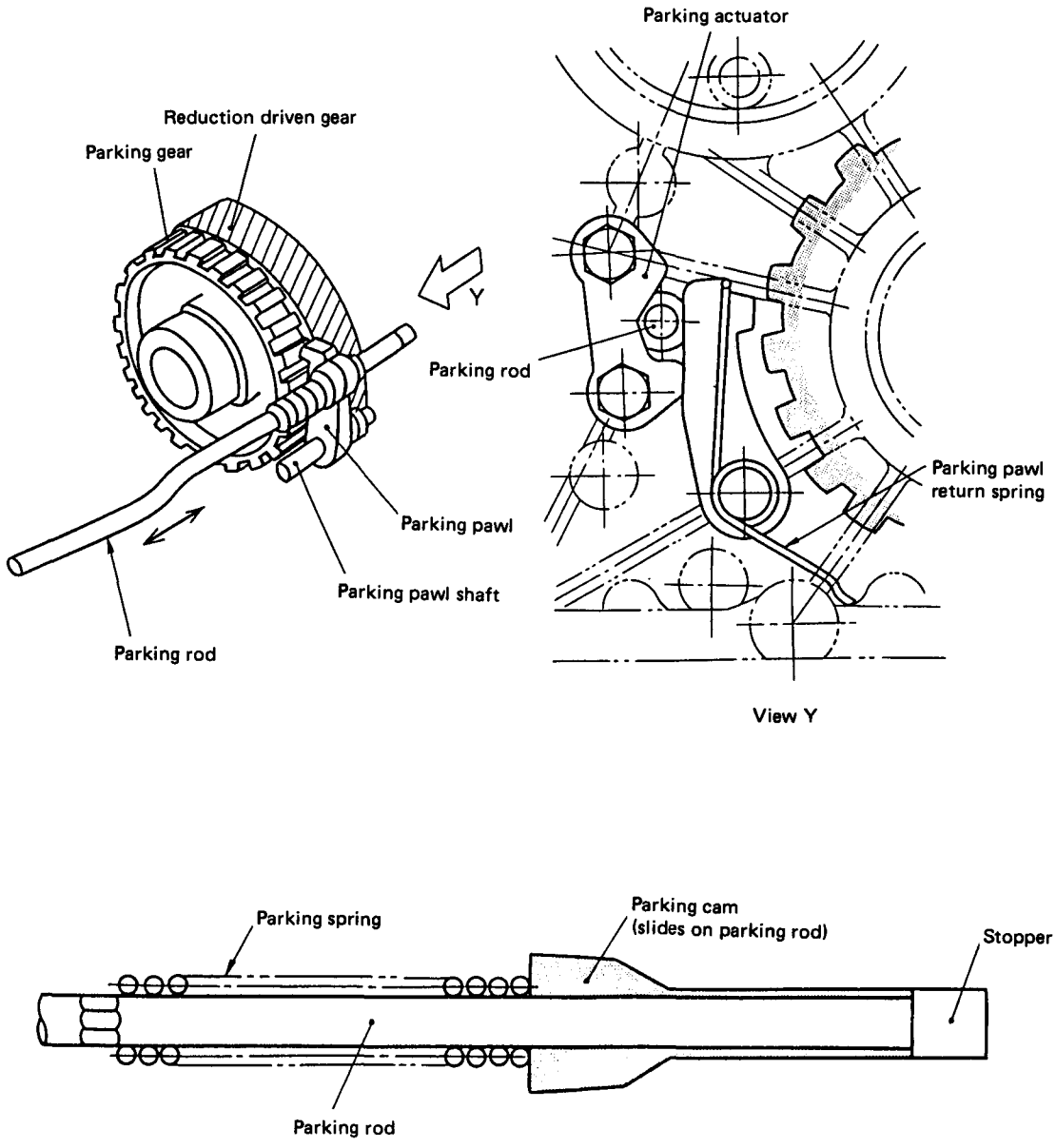

Fig. 101

SPECIFICATIONS AND SERVICE DATA

1 Specifications

				1800 cc	2700 cc
Torque converter	Type			Symmetric, 3-element, single stage, 2 phase torque converter coupling	
	Stall torque ratio			2.4 – 2.5	2.2 – 2.3
	Nominal diameter			246 mm (9.69 in)	
	Stall speed (at sea level)			2,450 – 2,850 rpm	2,400 – 2,800 rpm
	One-way clutch			Sprag type one-way clutch	
Automatic transmission	Transmission	Type		4-forward, 1-reverse, double-row planetary gears	
		Control element	Multi-plate clutch	4 sets	
			Multi-plate brake	1 set	
			Band brake	1 set	
			One-way clutch (sprag type)	2 sets	
		Gear ratio	1st	2.785	
			2nd	1.545	
			3rd	1.000	
			4th	0.694	
			Reverse	2.272	
		Tooth number of planetary gear	Front sun gear	33	
			Front pinion	21	
			Front internal gear	75	
			Rear sun gear	42	
			Rear pinion	17	
			Rear internal gear	75	
		Selector pattern	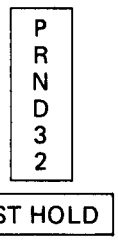		

				1800 cc	2700 cc
Automatic transmission	Transmission	Selector position	P (Park)	Transmission in neutral, output member immovable, and engine start possible	
			R (Reverse)	Transmission in reverse for backing	
			N (Neutral)	Transmission in neutral, and engine start possible	
			D (Drive)	Automatic gear change 1st ⇄ 2nd ⇄ 3rd ⇄ 4th	
			3 (3rd)	Automatic gear change 1st ⇄ 2nd ⇄ 3rd	
			2 (2nd)	Automatic gear change 1st ⇄ 2nd ← 3rd	
			1st Hold	1st gear locked (Deceleration 3rd → 2nd → 1st possible)	
		Control method		Hydraulic remote control	
	Oil pump	Type		Variable-capacity type vane pump	
		Driving method		Driven by engine	
		Number of vanes		9 pieces	
	Hydraulic control	Type		Electronic/hydraulic control [Four forward speed changes by electrical signals of car speed and accelerator (throttle) opening]	
		Fluid		Automatic transmission fluid (ATF) DEXRON II	
		Fluid capacity		9.3ℓ (9.8 US qt, 8.2 Imp qt)	FWD: 9.3ℓ (9.8 US qt, 8.2 Imp qt) 4WD: 9.5ℓ (10.0 US qt, 8.4 Imp qt)
	Lubrication	Lubrication system		Forced feed lubrication with oil pump	
		Oil		Automatic transmission fluid (above-mentioned)	
	Cooling	Cooling system		Liquid-cooled cooler incorporated in radiator	
	Harness	Inhibitor switch		11 poles	
		Transmission harness		11 poles	10 poles
		Resolution sensor		–	3 poles
Transfer	Transfer clutch			–	Hydraulic multi-plate clutch
	Control method			–	Electronic, hydraulic type
	Lubricant			–	The same Automatic transmission fluid used in Automatic transmission
	1st reduction gear ratio			1.000 (47/47)	
Final reduction	Final gear ratio		Front drive	3.900 (39/10)	3.700 (37/10)
			Rear drive	–	3.700 (37/10)
	Speedometer gear ratio			0.840 (21/25)	FWD: 0.869 (20/23) 4WD: 0.840 (21/25)
	Lubrication oil			API, GL-5	
	Oil capacity		Front drive	1.4ℓ (3.0 US pt, 2.5 Imp pt)	
			Rear drive	–	0.8ℓ (1.7 US pt, 1.4 Imp pt)
ATF cooling system	Radiation capacity			1.454 kW (1,250 kcal/h, 4,960 BTU/h)	

2 Location and Dimension of Adjusting Parts

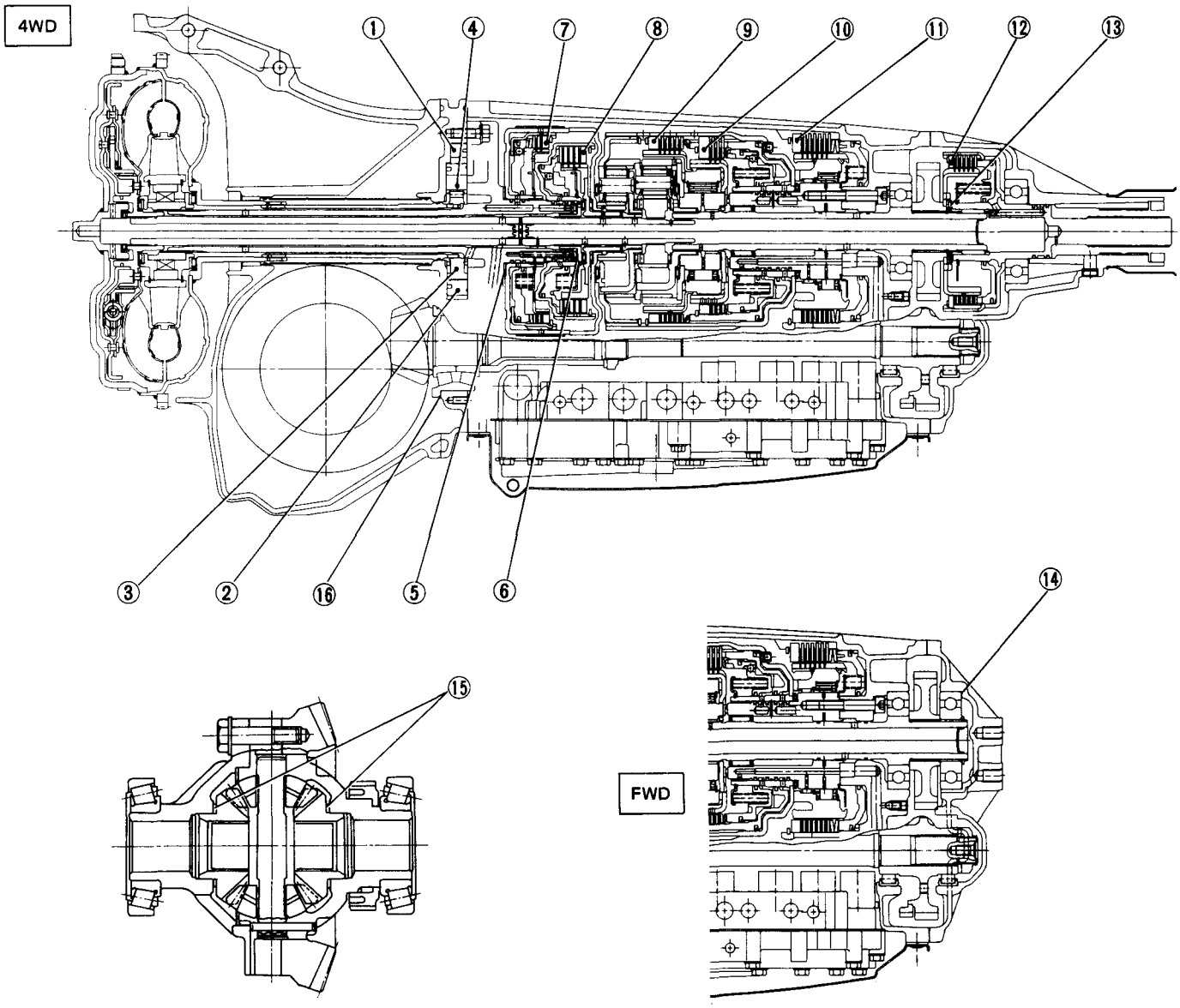

Fig. 102

No.	Part Name	Part Number	Dimension mm (in)	Application
1	CONTROL PISTON	31235AA000 – 030	$13.5\ ^{-0.030}_{-0.037}$ ($0.5315\ ^{-0.0012}_{-0.0015}$), $13.5\ ^{-0.023}_{-0.030}$ ($0.5315\ ^{-0.0009}_{-0.0012}$), $13.5\ ^{-0.016}_{-0.023}$ ($0.5315\ ^{-0.0006}_{-0.0009}$), $13.5\ ^{-0.009}_{-0.016}$ ($0.5315\ ^{-0.0004}_{-0.0006}$)	Adjusting side clearance of oil pump
2	CAM RING	31241AA000 – 030	$17\ ^{-0.010}_{-0.017}$ ($0.6693\ ^{-0.0004}_{-0.0007}$), $17\ ^{-0.003}_{-0.010}$ ($0.6693\ ^{-0.0001}_{-0.0004}$), $17\ ^{+0.004}_{-0.003}$ ($0.6693\ ^{+0.0002}_{-0.0001}$), $17\ ^{+0.011}_{+0.004}$ ($0.6693\ ^{+0.0004}_{+0.0002}$)	Adjusting side clearance of oil pump
3	VANE (Oil pump)	31243AA000 – 030	$17\ ^{-0.030}_{-0.037}$ ($0.6693\ ^{-0.0012}_{-0.0015}$), $17\ ^{-0.023}_{-0.030}$ ($0.6693\ ^{-0.0009}_{-0.0012}$), $17\ ^{-0.016}_{-0.023}$ ($0.6693\ ^{-0.0006}_{-0.0009}$), $17\ ^{-0.009}_{-0.016}$ ($0.6693\ ^{-0.0004}_{-0.0006}$)	Adjusting side clearance of oil pump
4	ROTOR (Oil pump)	31240AA000 – 030	$17\ ^{-0.030}_{-0.037}$ ($0.6693\ ^{-0.0012}_{-0.0015}$), $17\ ^{-0.023}_{-0.030}$ ($0.6693\ ^{-0.0009}_{-0.0012}$), $17\ ^{-0.016}_{-0.023}$ ($0.6693\ ^{-0.0006}_{-0.0009}$), $17\ ^{-0.009}_{-0.016}$ ($0.6693\ ^{-0.0004}_{-0.0006}$)	Adjusting side clearance of oil pump
5	THRUST WASHER (Reverse clutch)	31299AA000 – 060	0.7, 0.9, 1.1, 1.3, 1.5, 1.7, 1.9 (0.028, 0.035, 0.043, 0.051, 0.059, 0.067, 0.075)	Adjusting end play of reverse clutch drum
6	BEARING RACE	803031021 – 27	0.8, 1.0, 1.2, 1.4, 1.6, 1.8, 2.0 (0.031, 0.039, 0.047, 0.055, 0.063, 0.071, 0.079)	Adjusting total end play
7	RETAINING PLATE	31567AA000, 020 – 050	4.6, 4.8, 5.0, 5.2, 5.4 (0.181, 0.189, 0.197, 0.205, 0.213)	Adjusting clearance of reverse clutch
8	RETAINING PLATE	31567AA190 – 260	3.6, 3.8, 4.0, 4.2, 4.4, 4.6, .4.8, 5.0 (0.142, 0.150, 0.157, 0.165, 0.173, 0.181, 0.189, 0.197)	Adjusting clearance of high clutch
9	RETAINING PLATE	31567AA010, 060 – 110	8.0, 8.2, 8.4, 8.6, 8.8, 9.0, 9.2 (0.315, 0.323,0.331, 0.339, 0.346, 0.354, 0.362)	Adjusting clearance of forward clutch
10	RETAINING PLATE	31567AA120 – 180	8.0, 8.2, 8.4, 8.6, 8.8, 9.0, 9.2 (0.315, 0.323, 0.331, 0.339, 0.346, 0.354, 0.362)	Adjusting clearance of over-running clutch
11	RETAINING PLATE No. 2	31667AA180 – 250	6.5, 6.8, 7.1, 7.4, 7.7, 8.0, 8.2, 8.4, (0.256, 0.268, 0.280, 0.291, 0.303, 0.315, 0.323, 0.331)	Adjusting clearance of low & reverse clutch
12	PRESSURE PLATE (Front)	31593AA150 – 180	3.3, 3.7, 4.1, 4.5 (0.130, 0.146, 0.161, 0.177)	Adjusting clearance of transfer clutch
13	THRUST BEARING (35 x 53 x T)	806535020 – 090	3.8, 4.0, 4.2, 4.4, 4.6, 4.8, 5.0 (0.150, 0.157, 0.165, 0.173, 0.181, 0.189, 0.197)	Adjusting end play of transfer clutch
14	SHIM (Reduction gear)	31288AA000	0.15 (0.0059)	Adjusting end play of reduction drive gear
15	WASHER (38.1 x 50 x T)	803038021 – 023	0.95, 1.00, 1.05 (0.0374, 0.0394, 0.0413)	Adjusting backlash of differential bevel gear
16	DRIVE PINION SHIM	31451AA050 – 100	0.15, 0.175, 0.2, 0.225, 0.25, 0.275 (0.0059, 0.0069, 0.0079, 0.0089, 0.0098, 0.0108)	Adjusting drive pinion height

3 Location and Installing Direction of Thrust Needle Bearing and Washer

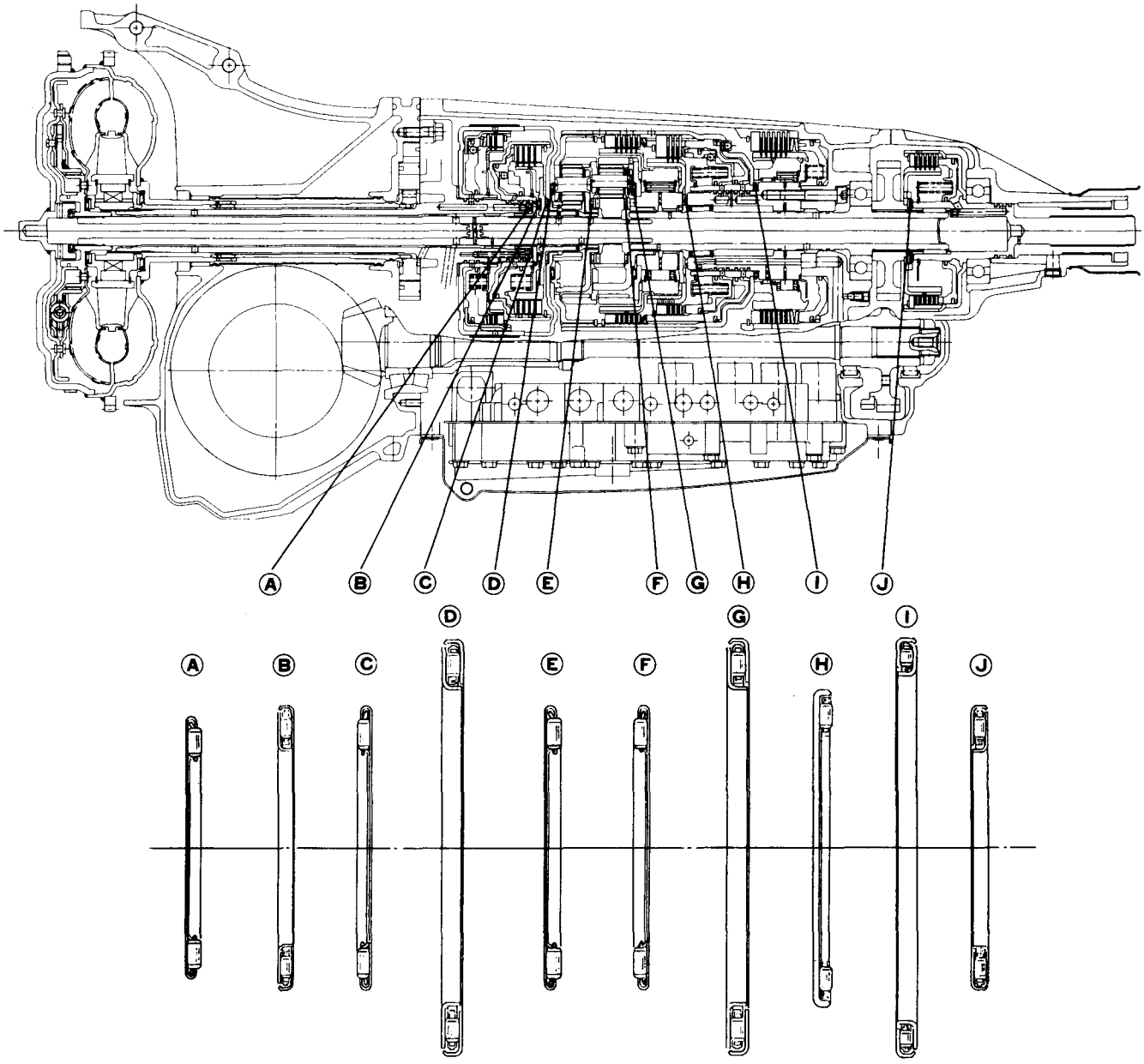

Fig. 103

COMPONENT PARTS

Torque Converter and Converter Case

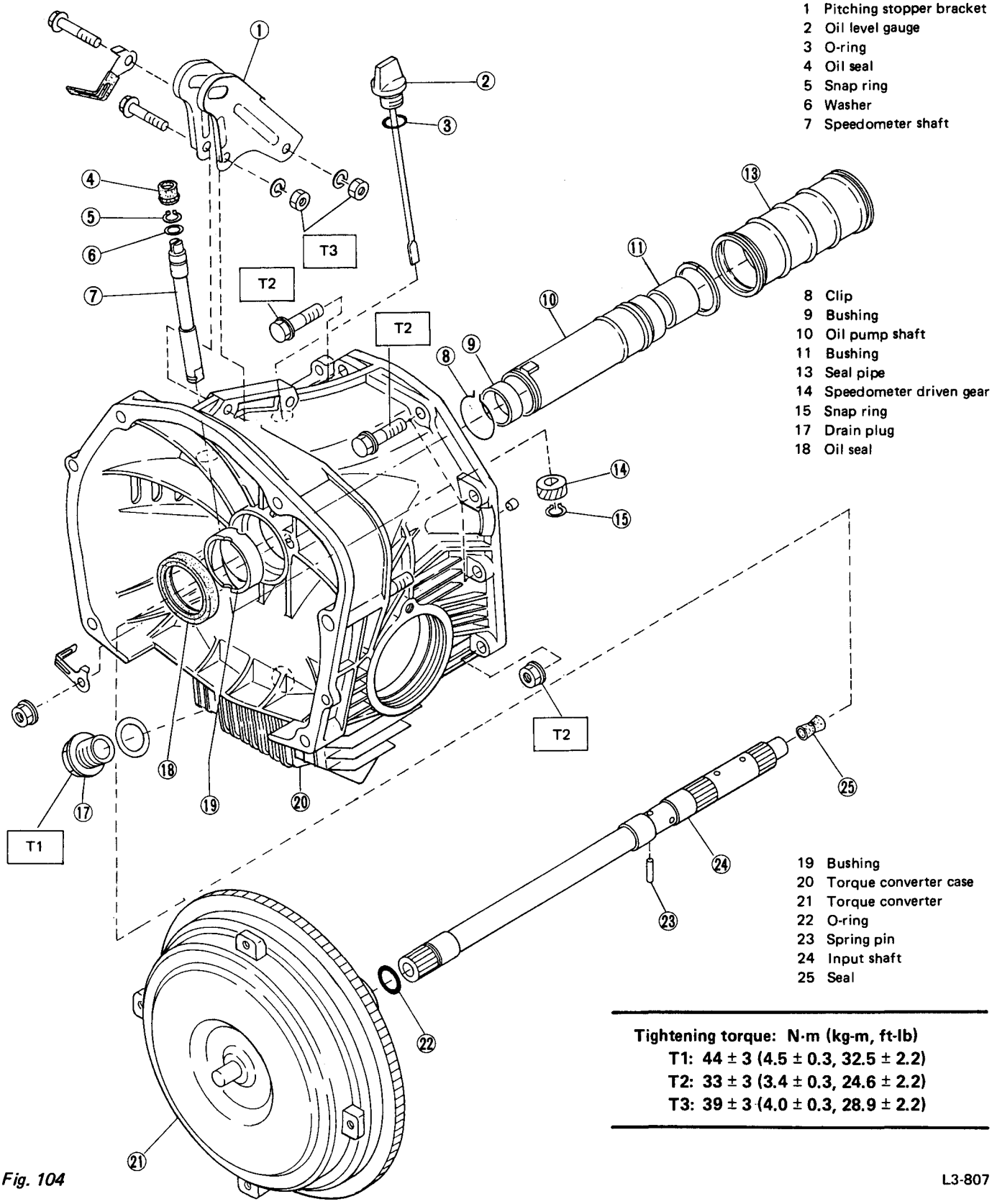

1 Pitching stopper bracket
2 Oil level gauge
3 O-ring
4 Oil seal
5 Snap ring
6 Washer
7 Speedometer shaft

8 Clip
9 Bushing
10 Oil pump shaft
11 Bushing
13 Seal pipe
14 Speedometer driven gear
15 Snap ring
17 Drain plug
18 Oil seal

19 Bushing
20 Torque converter case
21 Torque converter
22 O-ring
23 Spring pin
24 Input shaft
25 Seal

Tightening torque: N·m (kg-m, ft-lb)
T1: 44 ± 3 (4.5 ± 0.3, 32.5 ± 2.2)
T2: 33 ± 3 (3.4 ± 0.3, 24.6 ± 2.2)
T3: 39 ± 3 (4.0 ± 0.3, 28.9 ± 2.2)

Fig. 104

L3-807

Differential Case

Tightening torque: N·m (kg-m, ft-lb)
T1: 57 – 67 (5.8 – 6.8, 42 – 49)
T2: 23 – 26 (2.3 – 27, 17 – 20)

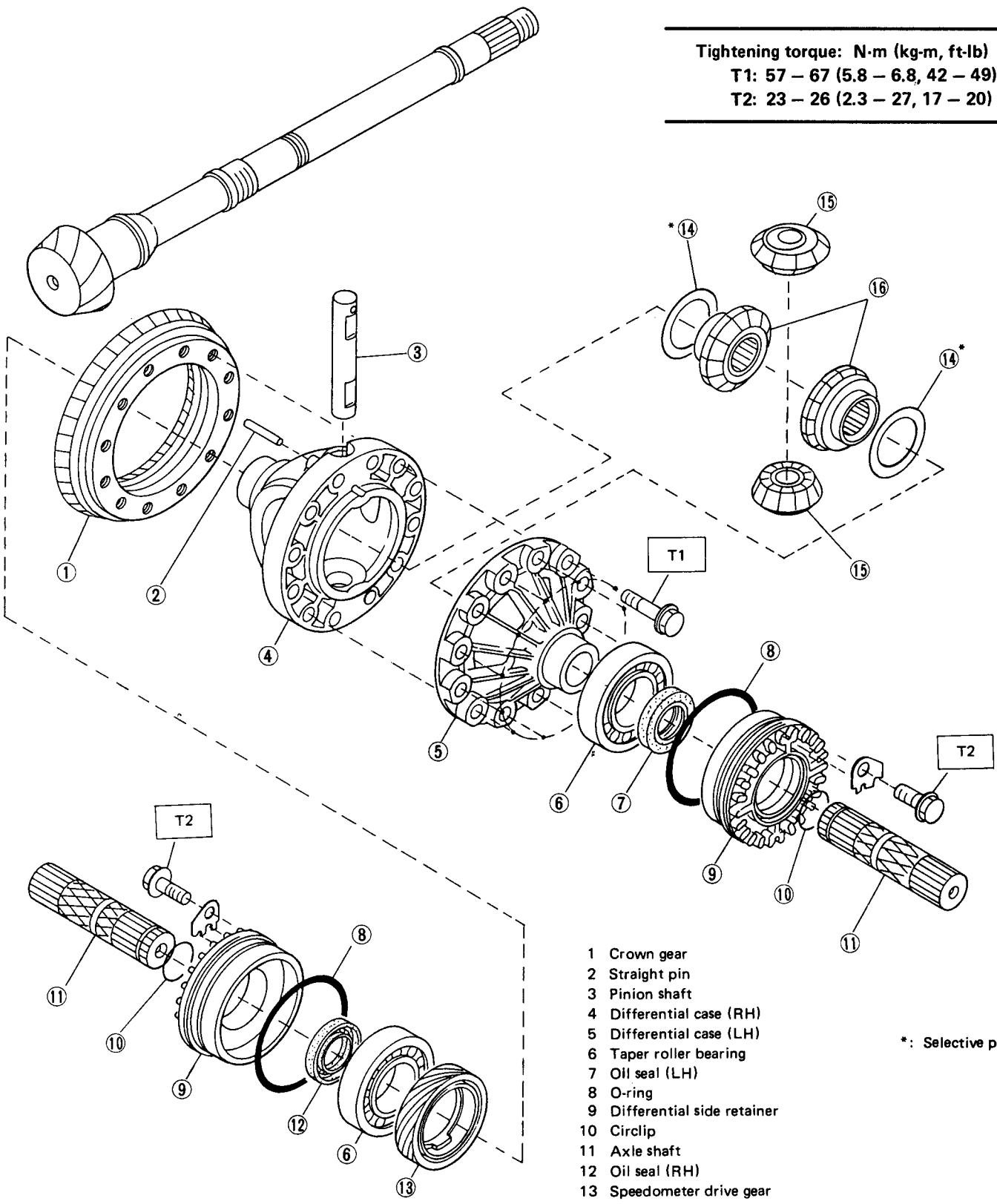

1 Crown gear
2 Straight pin
3 Pinion shaft
4 Differential case (RH)
5 Differential case (LH)
6 Taper roller bearing
7 Oil seal (LH)
8 O-ring
9 Differential side retainer
10 Circlip
11 Axle shaft
12 Oil seal (RH)
13 Speedometer drive gear
*14 Washer
15 Differential bevel pinion
16 Differential bevel gear

*: Selective parts

Fig. 105

L3-808

Oil Pump

Tightening torque: N·m (kg-m, ft-lb)
T1: 25 ± 2 (2.5 ± 0.2, 18.1 ± 1.4)
T2: 39 ± 3 (4.0 ± 0.3, 28.9 ± 2.2)
T3: 33 ± 3 (3.4 ± 0.3, 24.6 ± 2.2)
T4: 13 ± 1 (1.3 ± 0.1, 9.4 ± 0.7)
T5: 7 ± 1 (0.7 ± 0.1, 5.1 ± 0.7)
T6: 113 ± 5 (11.5 ± 0.5, 83.2 ± 3.6)

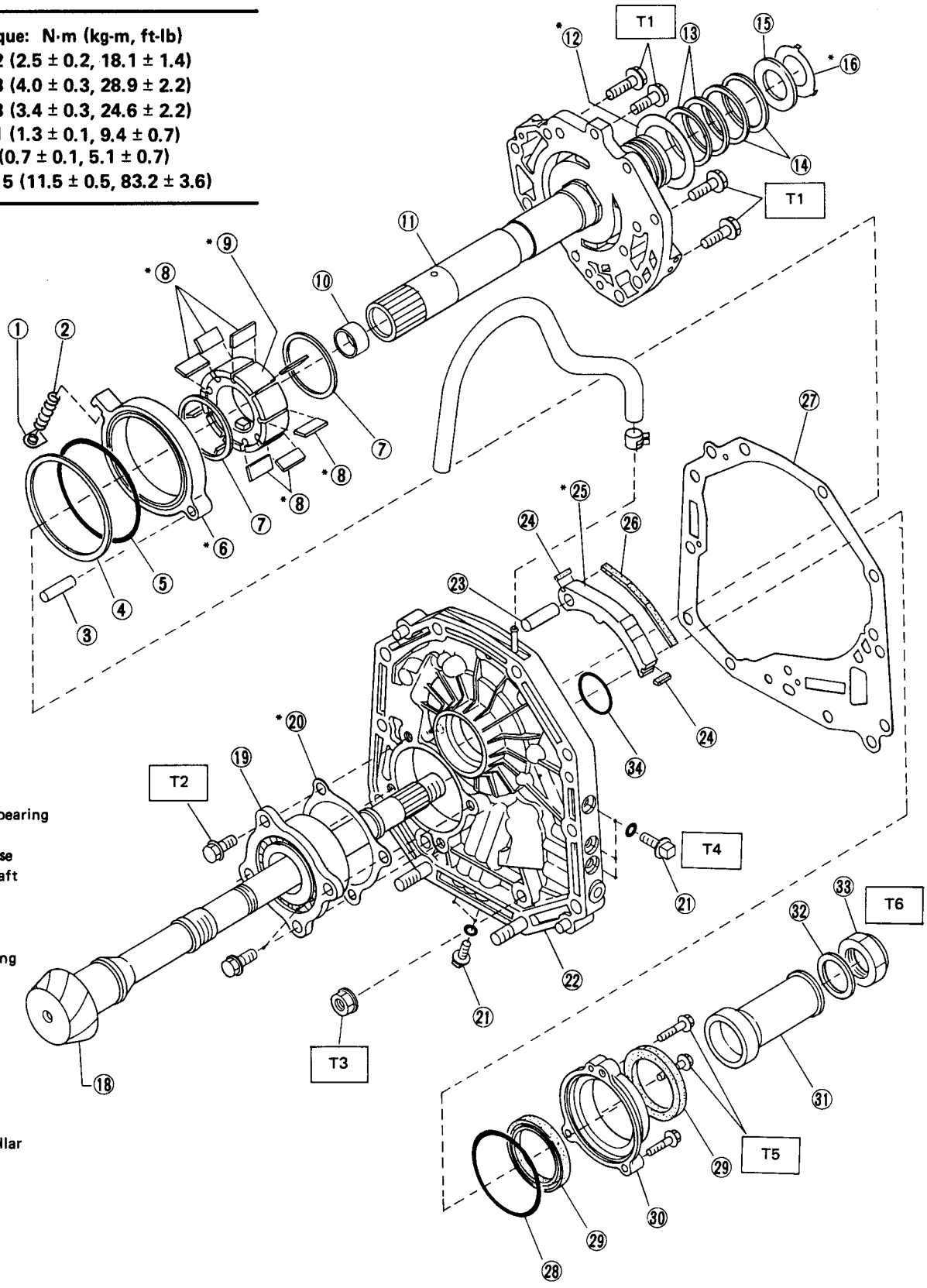

*: Selective parts

1 Retainer
2 Return spring
3 Pin
4 Friction ring
5 O-ring
*6 Cam ring
7 Vane ring
*8 Vane
*9 Rotor
10 Bushing
11 Oil pump cover
*12 Thrust washer
13 Seal ring (R)
14 Seal ring (H)
15 Thrust needle bearing
*16 Thrust washer
17 Air breather hose
18 Drive pinion shaft
19 Roller bearing
*20 Shim
21 Test plug
22 Oil pump housing
23 Pin
24 Side seal
*25 Control piston
26 Plane seal
27 Gasket
28 O-ring
29 Oil seal
30 Oil seal retainer
31 Drive pinion collar
32 Lock washer
33 Lock nut
34 O-ring

Fig. 106 L3-1017

Transmission Case, Transmission Cover and Control Device

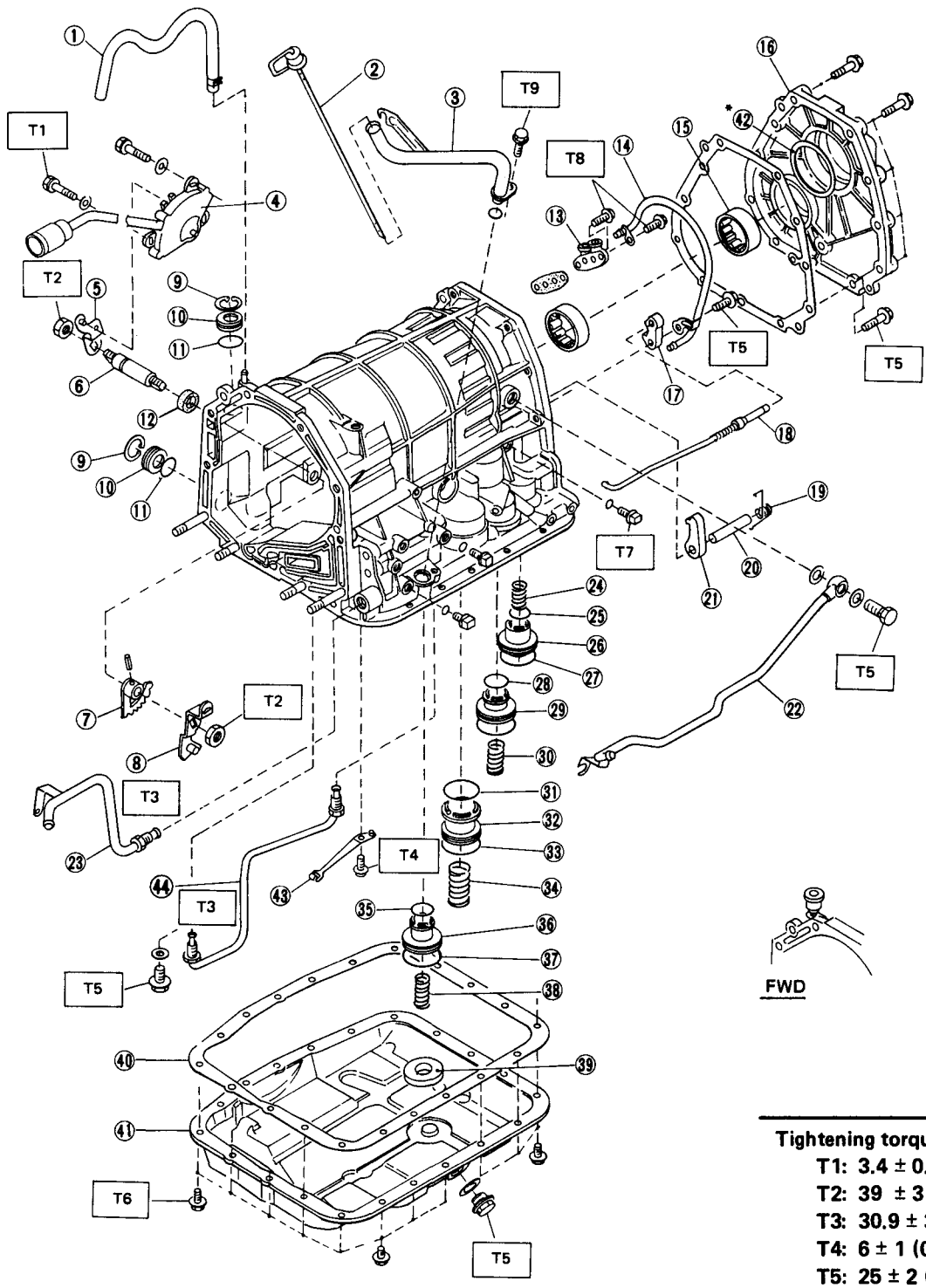

*: Selective parts

1 Air breather hose
2 Oil level gauge
3 Oil charge pipe
4 Inhibitor switch
5 Range select lever
6 Manual shaft
7 Manual plate
8 Manual lever
9 Snap ring
10 Plug
11 O-ring
12 Oil seal
13 Releaf valve
14 Pipe
15 Roller bearing
16 Transmission cover (FWD)
17 Parking support
18 Parking rod
19 Return spring
20 Shaft
21 Parking pawl
22 Inlet pipe
23 Outlet pipe
24 Spring
25 O-ring
26 Accumulator piston (N-D)
27 O-ring
28 O-ring
29 Accumulator piston (2-3)
30 Spring
31 O-ring
32 Accumulator piston (1-2)
33 O-ring
34 Spring
35 O-ring
36 Accumulator piston (3-4)
37 O-ring
38 Spring
39 Magnet
40 Gasket
41 Oil pan
*42 Shim
43 Detent spring
44 Pipe

Tightening torque: N·m (kg-m, ft-lb)

T1: 3.4 ± 0.5 (0.35 ± 0.05, 2.5 ± 0.4)
T2: 39 ± 3 (4.0 ± 0.3, 28.9 ± 2.2)
T3: 30.9 ± 3.4 (3.15 ± 0.35, 22.8 ± 2.5)
T4: 6 ± 1 (0.6 ± 0.1, 4.3 ± 0.7)
T5: 25 ± 2 (2.5 ± 0.2, 18.1 ± 1.4)
T6: 3.9 ± 0.5 (0.4 ± 0.05, 2.9 ± 0.4)
T7: 13 ± 1 (1.3 ± 0.1, 9.4 ±0.7)
T8: 8 ± 1 (0.8 ± 0.1, 5.8 ± 0.7)
T9: 6.4 ± 0.5 (0.65 ± 0.05, 4.7 ± 0.4)

Fig. 107

L3-810

Control Valve and Harness Routing

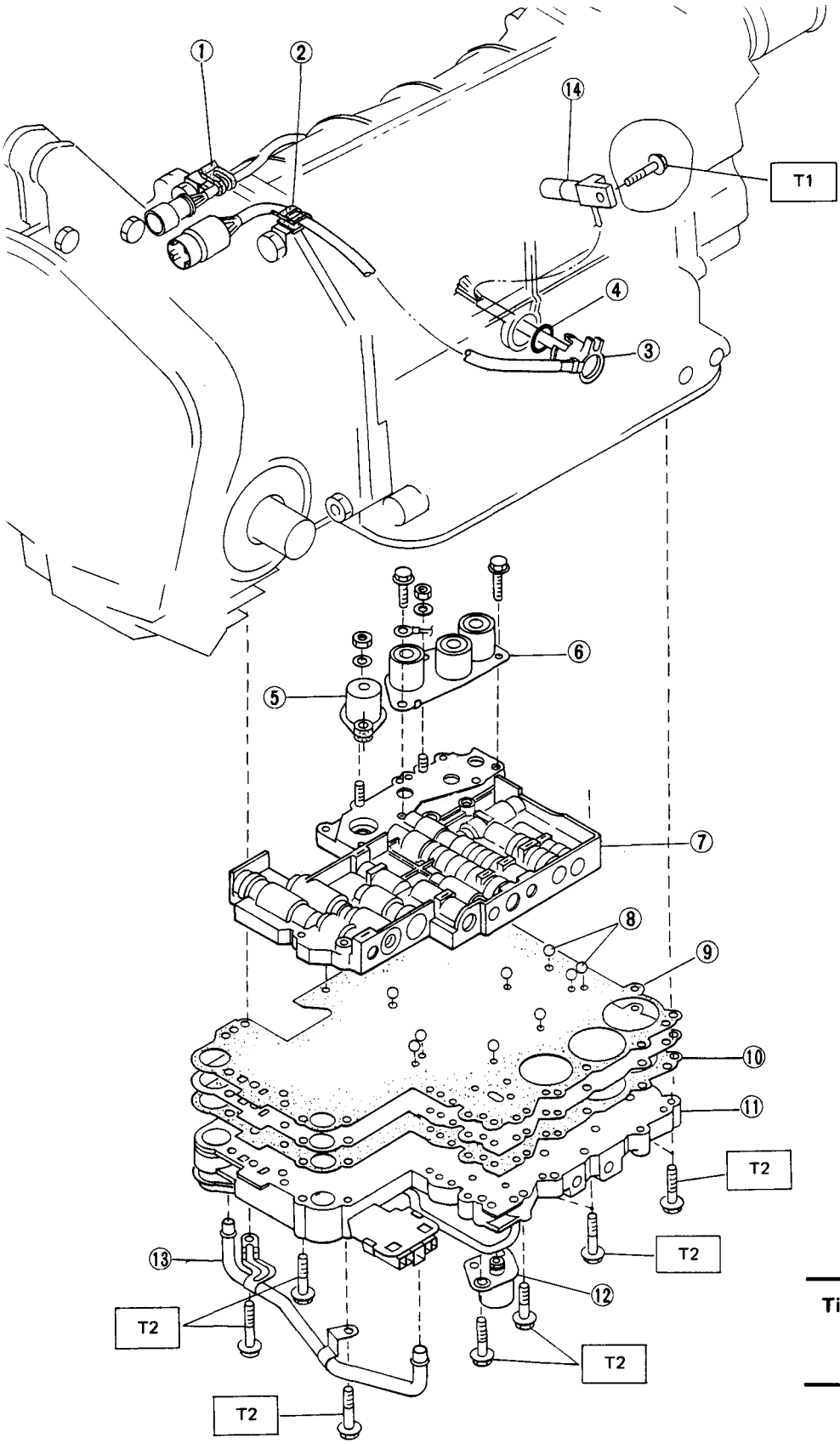

1 Clip
2 Clip
3 Transmission harness
4 O-ring
5 Duty sol. A (Line-pressure)
6 Sol. Assy
7 Upper valve body
8 Ball
9 Upper separator plate
10 Lower separator plate
11 Lower valve body
12 Duty sol. B (Lock-up)
13 Pipe
14 Revolution sensor (FWD)

Tightening torque: N·m (kg-m, ft-lb)
T1: 7 ± 1 (0.7 ± 0.1, 5.1 ± 0.7)
T2: 8 ± 1 (0.8 ± 0.1, 5.8 ± 0.7)

Fig. 108

L3-811

Reverse Clutch and Band Brake

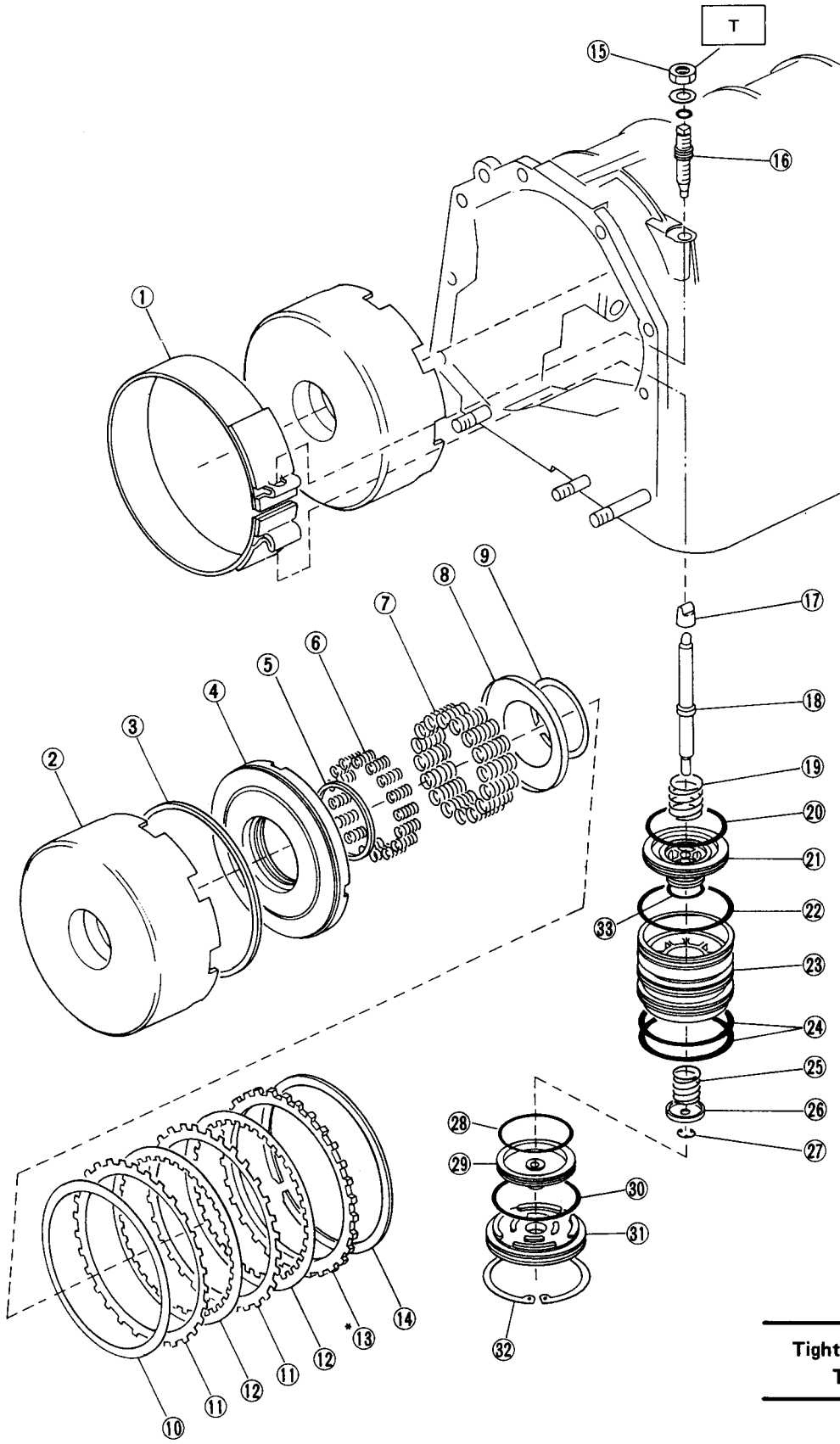

*: Selective parts

1 Brake band
2 Reverse clutch drum
3 Lip seal
4 Piston
5 Lathe cut seal ring
6 Spring
7 Spring
8 Spring retainer
9 Snap ring
10 Dish plate
11 Driven plate
12 Drive plate
*13 Retaining plate
14 Snap ring
15 Lock nut
16 Brake band adjusting screw
17 Strut
18 Band servo piston stem
19 Spring
20 Lathe cut seal ring
21 Band servo piston (1-2)
22 O-ring
23 Retainer
24 O-ring
25 Spring
26 Retainer
27 Circlip
28 Lathe cut seal ring
29 Band servo piston (3-4)
30 O-ring
31 O.D. servo retainer
32 Snap ring
33 Lathe cut seal ring

Tightening torque: N·m (kg-m, ft-lb)
T: 25 – 28 (2.5 – 2.9, 18 ± 21)

Fig. 109

L3-812

High Clutch and Planetary Gear

*: Selective parts

1 High clutch drum
2 Lathe cut seal ring
3 Piston
4 Lathe cut seal ring
5 Spring retainer CP.
6 Snap ring
7 Driven plate (Thinner)
8 Drive plate
9 Driven plate (Thicker)
*10 Retaining plate
11 Snap ring
12 Thrust needle bearing
13 High clutch hub
14 Thrust needle bearing
15 Front sun gear
16 Thrust needle bearing
17 Front planetary carrier
18 Thrust needle bearing
19 Rear sun gear
20 Thrust needle bearing
21 Rear planetary carrier
22 Thrust needle bearing
23 Rear internal gear
24 Thrust washer
25 Snap ring
26 One-way clutch (3-4)
27 One-way clutch outer race (3-4)
28 Overrunning clutch hub

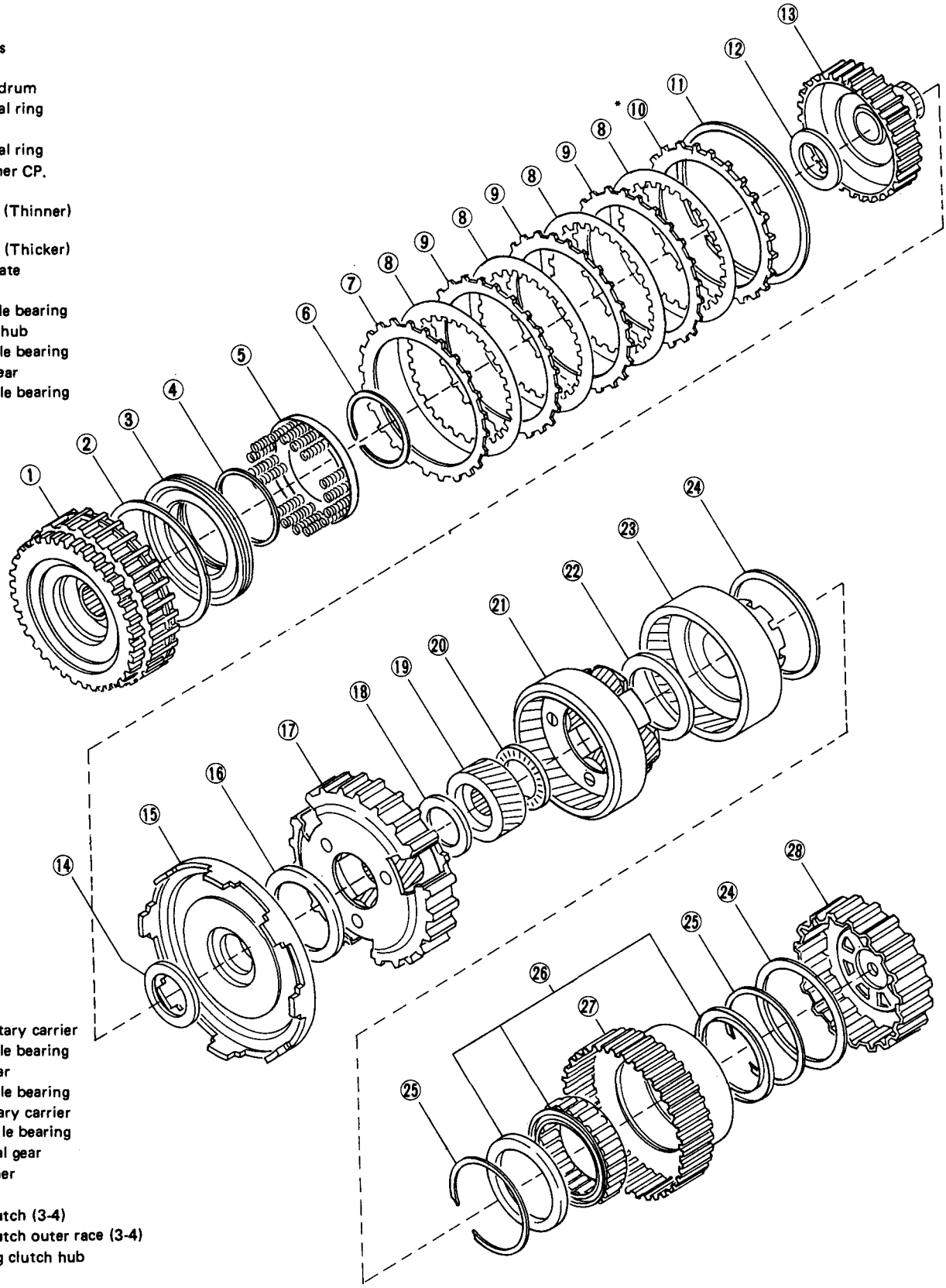

Fig. 110

L3-813

Forward Clutch and Low & Reverse Brake

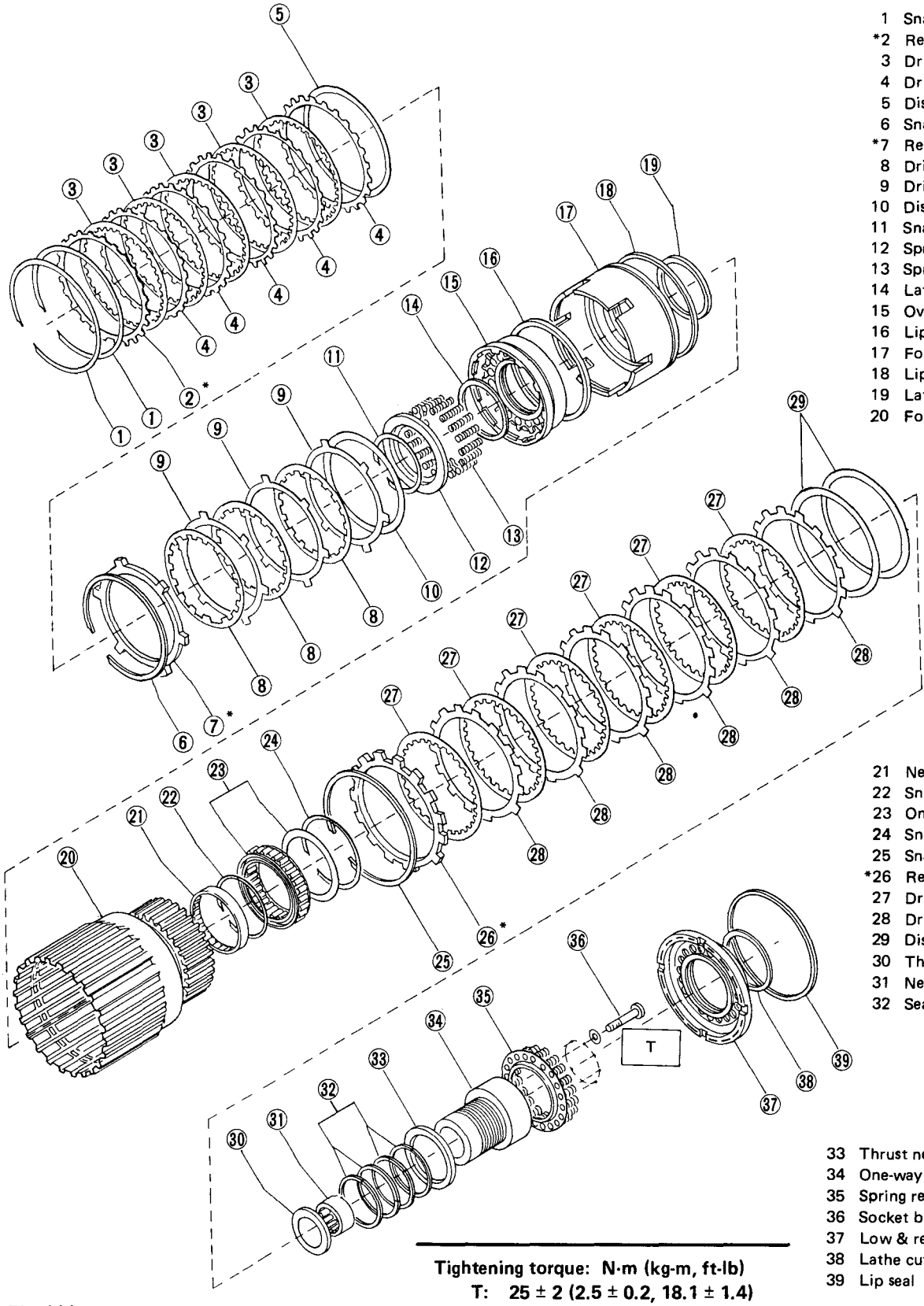

1 Snap ring
*2 Retaining plate
3 Drive plate
4 Driven plate
5 Dish plate
6 Snap ring
*7 Retaining plate
8 Drive plate
9 Driven plate
10 Dish plate
11 Snap ring
12 Spring retainer
13 Spring
14 Lathe cut seal ring
15 Overrunning piston
16 Lip seal
17 Forward piston
18 Lip seal
19 Lathe cut seal ring
20 Forward clutch drum

21 Needle bearing
22 Snap ring
23 One-way clutch (1-2)
24 Snap ring
25 Snap ring
*26 Retaining plate
27 Drive plate
28 Driven plate
29 Dish plate
30 Thrust needle bearing
31 Needle bearing
32 Seal ring

33 Thrust needle bearing
34 One-way clutch inner race (1-2)
35 Spring retainer CP.
36 Socket bolt
37 Low & reverse piston
38 Lathe cut seal ring
39 Lip seal

Tightening torque: N·m (kg-m, ft-lb)
T: 25 ± 2 (2.5 ± 0.2, 18.1 ± 1.4)

Fig. 111

L3-814

Reduction Gear

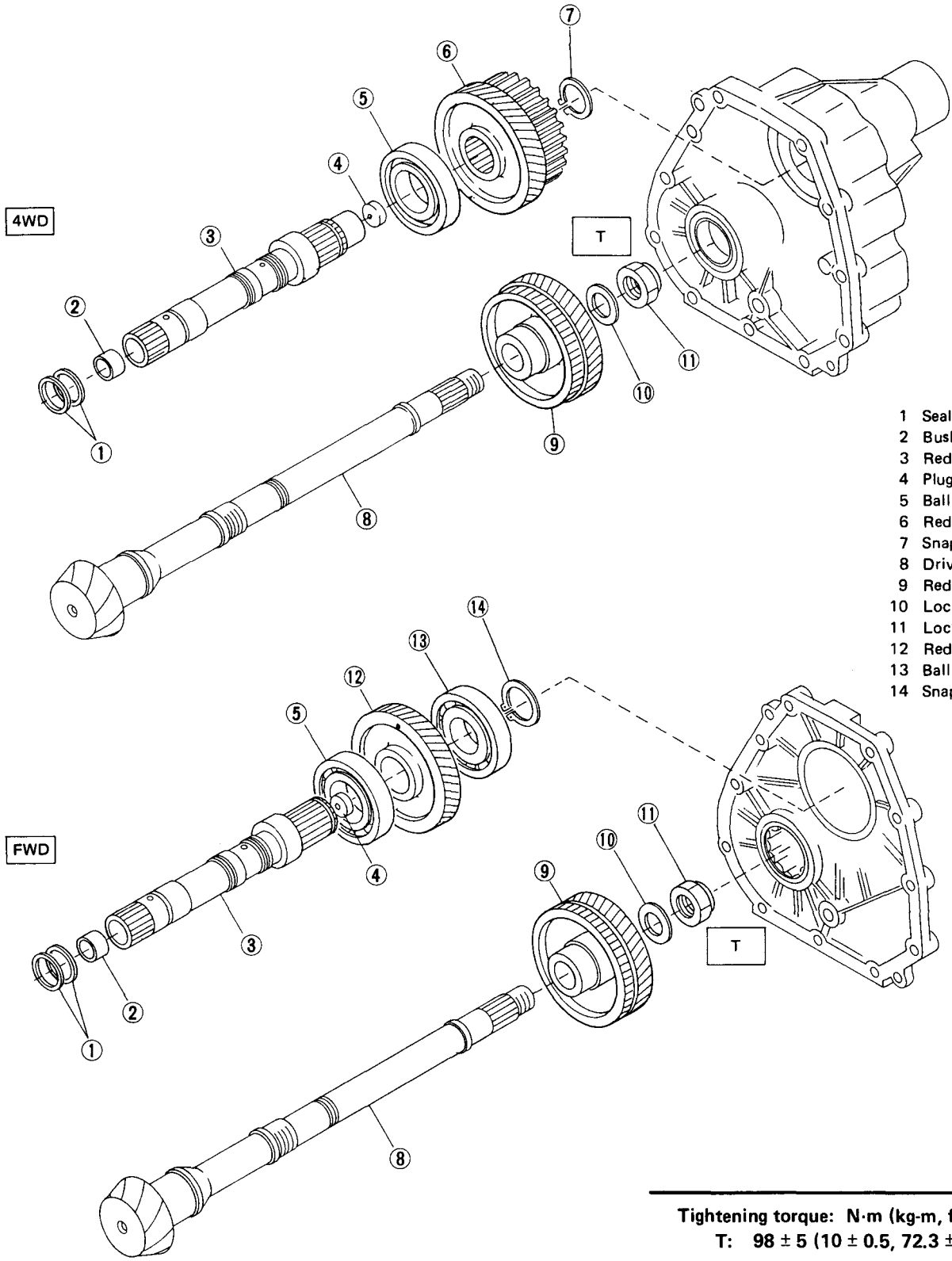

1 Seal ring
2 Bushing
3 Reduction drive shaft
4 Plug
5 Ball bearing
6 Reduction drive gear
7 Snap ring
8 Drive pinion shaft
9 Reduction driven gear
10 Lock washer
11 Lock nut
12 Reduction drive gear
13 Ball bearing
14 Snap ring

Tightening torque: N·m (kg-m, ft-lb)
T: 98 ± 5 (10 ± 0.5, 72.3 ± 3.6)

Fig. 112

L3-815

Transfer and Extension

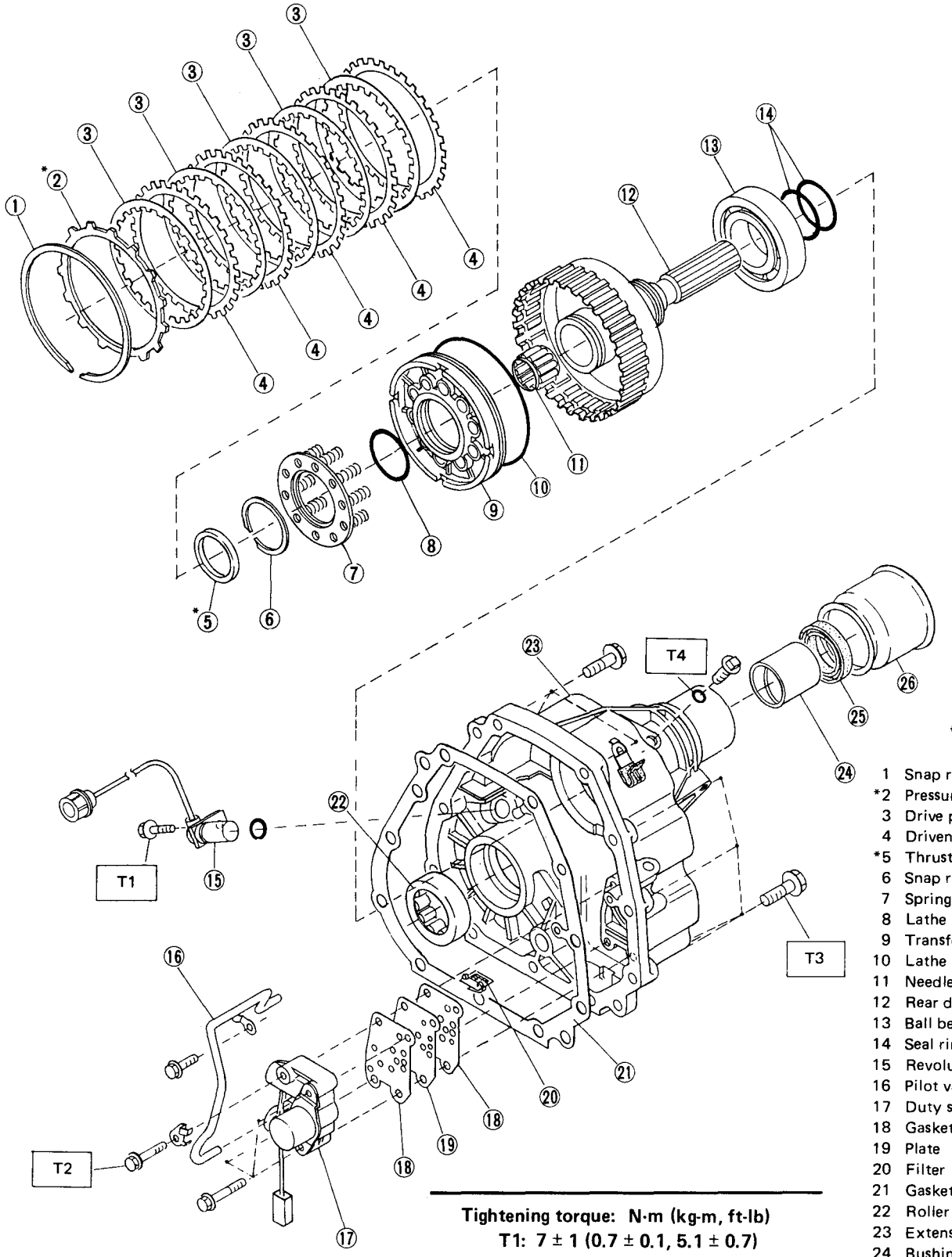

*: Selective parts

1 Snap ring
*2 Pressure plate
3 Drive plate
4 Driven plate
*5 Thrust needle bearing
6 Snap ring
7 Spring retainer CP
8 Lathe cut seal ring
9 Transfer clutch piston
10 Lathe cut seal ring
11 Needle bearing
12 Rear drive shaft
13 Ball bearing
14 Seal ring
15 Revolution sensor (4WD)
16 Pilot valve pipe
17 Duty sol. C (transfer)
18 Gasket
19 Plate
20 Filter
21 Gasket
22 Roller bearing
23 Extension case
24 Bushing
25 Oil seal
26 Dust seal

Tightening torque: N·m (kg-m, ft-lb)
T1: 7 ± 1 (0.7 ± 0.1, 5.1 ± 0.7)
T2: 8 ± 1 (0.8 ± 0.1, 5.8 ± 0.7)
T3: 25 ± 1 (2.5 ± 0.1, 18.1 ± 0.7)
T4: 13 ± 1 (1.3 ± 0.1, 9.4 ± 0.7)

Fig. 113

L3-816

SERVICE PROCEDURE

1 General Precaution

When disassembling or assembling the automatic transmission, observe the following instructions.

1) Workshop

Provide a place that is clean and free from dust. Principally the conventional workshop is suitable except for a dusty place. In a workshop where grinding work, etc. which produces fine particles is done, make independent place divided by the vinyl curtain or the equivalent.

2) Worktable

The size of 1 x 1.5 m (40 x 60 in) is large enough to work, and it is more desirable that its surface be covered with flat plate like iron plate which is not rusted too much.

3) Cleaning of exterior

(1) Clean the exterior surface of transmission with steam and/or kerosene prior to disassembly, however it should be noted that vinyl tape be placed on the airbreather or oil level gauge to prevent infiltration of the steam into the transmission and also the cleaning job be done away from the place of disassembly and assembly.

(2) Partial cleaning will do, depending on the extent of disassembly (such as when disassembly is limited to some certain parts).

4) Disassembly, assembly and cleaning

(1) Disassemble and assemble the transmission while inspecting the parts in accordance with the Trouble-shooting.

(2) During job, don't use gloves.

Don't clean the parts with rags: Use chamois or nylon cloth.

(3) Pay special attention to the air to be used for cleaning.

Get the moisture and the dust rid of the air as much as possible.

Be careful not to scratch or dent any part while checking for proper operation with an air gun.

(4) Complete the job from cleaning to completion of assembly as continuously and speedily as possible in order to avoid occurrence of secondary troubles caused by dust. When stopping the job unavoidably cover the parts with clean chamois or nylon cloth to keep them away from any dust.

(5) Use kerosene, white gasoline or the equivalent as washing fluid.

Use always new fluid for cleaning the automatic transmission parts and never reuse. The used fluid is usable in disassemble and assemble work of engine and manual transmission.

(6) Although the cleaning should be done by dipping into the washing fluid or blowing of the pressurized washing fluid, the dipping is more desirable. (Do not rub with a brush.) Assemble the parts immediately after the cleaning without exposure to the air for a while. Besides in case of washing rubber parts, perform the job quickly not to dip them into the washing fluid for long time.

(7) Apply the automatic transmission fluid (ATF) onto the parts immediately prior to assembly, and the specified tightening torque should be observed carefully.

(8) Use vaseline if it is necessary to hold parts in the position when assembling.

(9) Drain ATF and differential gear oil into a saucer so that the conditions of fluid and oil can be inspected.

(10) Do not support axle drive shaft, stator shaft, input shaft or various pipes when moving transmission from one place to another.

(11) Always discard old oil seals and bushings, and install new ones.

(12) Do not reuse old pipes, gaskets, plugs (1/8″), spring pins, etc.

Install new ones.

(13) Be sure to replace parts which are damaged, worn, scratched, discolored, etc.

SECTIONS THAT CAN BE DETACHED/ASSEMBLED

FWD

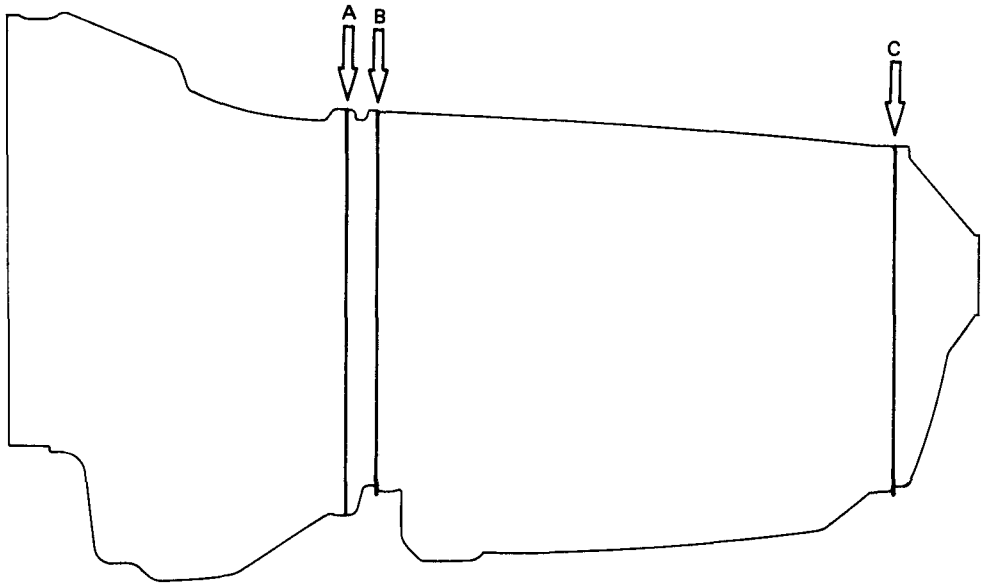

Section A ... YES
Section B ... YES
Section C ... YES

4WD

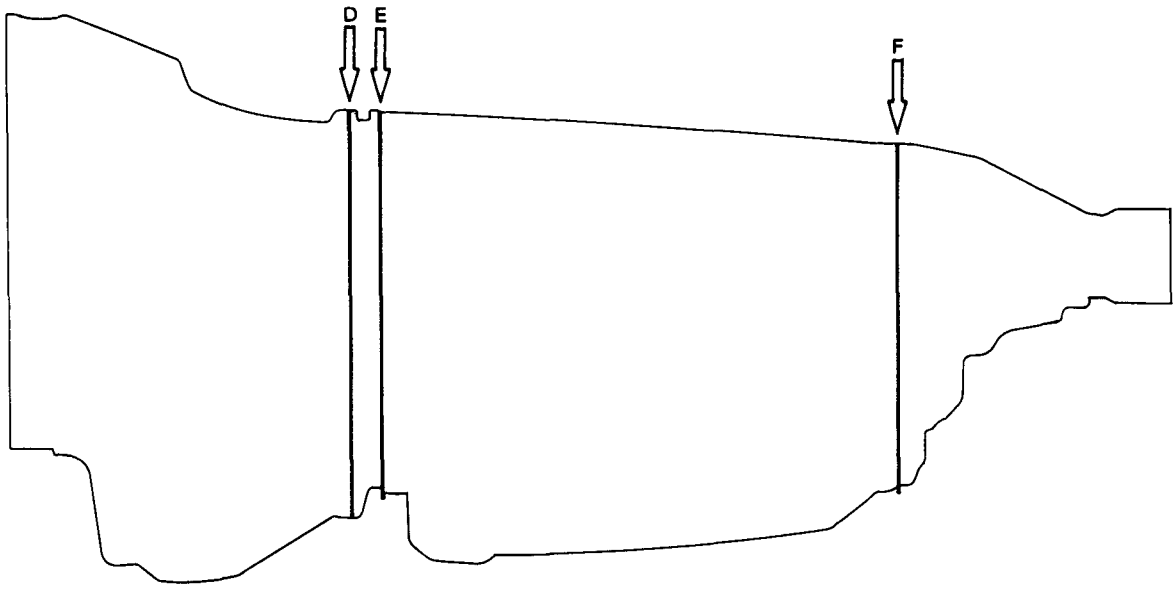

Section D ... YES
Section E ... YES
Section F ... YES

Fig. 114

L3-833

2 Disassembly of Overall Transmission

1. External Parts

1) Place the transmission unit on a workbench, with the oil pan facing down.

Be careful not to bend or damage external parts.

2) Remove the drain plug, and drain differential oil. Tighten the plug temporarily after draining.

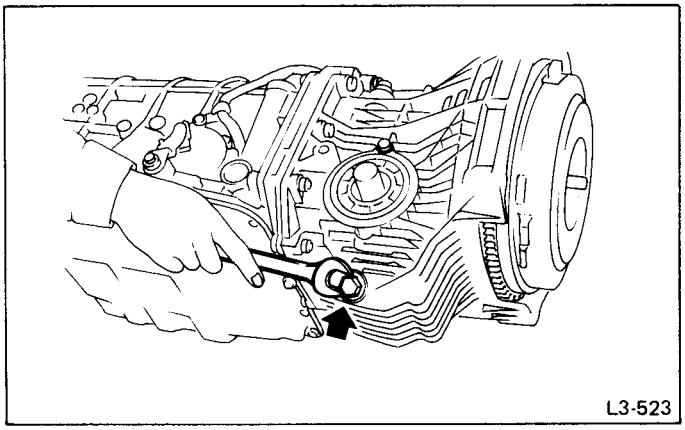

Fig. 115

3) Remove the drain plug, and drain automatic transmission fluid (ATF). Tighten the plug temporarily after draining.

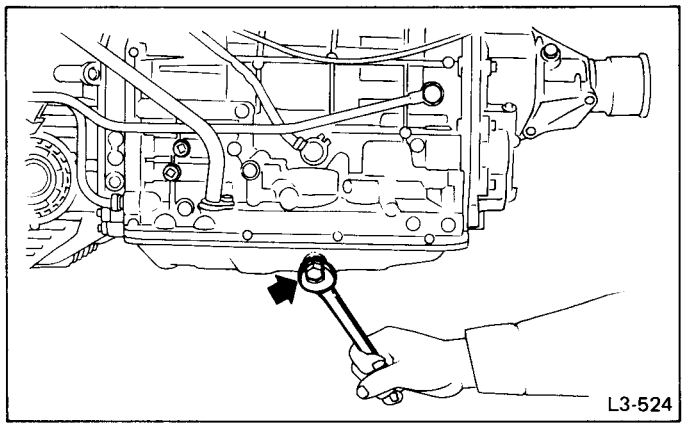

Fig. 116

4) Extract the torque converter.

a. Extract the torque converter horizontally. Be careful not to scratch the bushing inside the oil pump shaft.
b. Note that oil pump shaft also comes out.

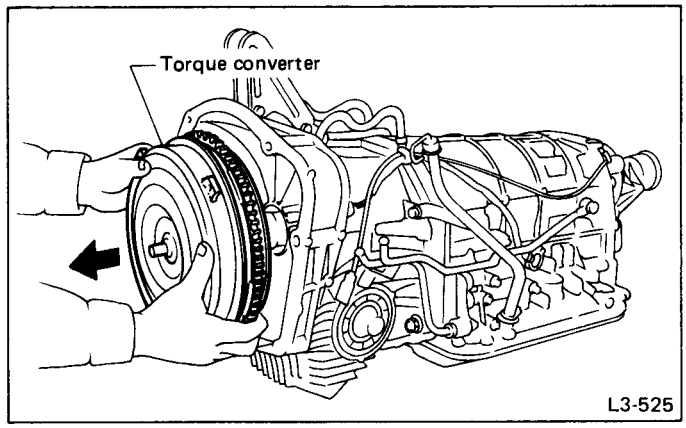

Fig. 117

5) Remove the input shaft.

Be careful not to scratch the bushing.

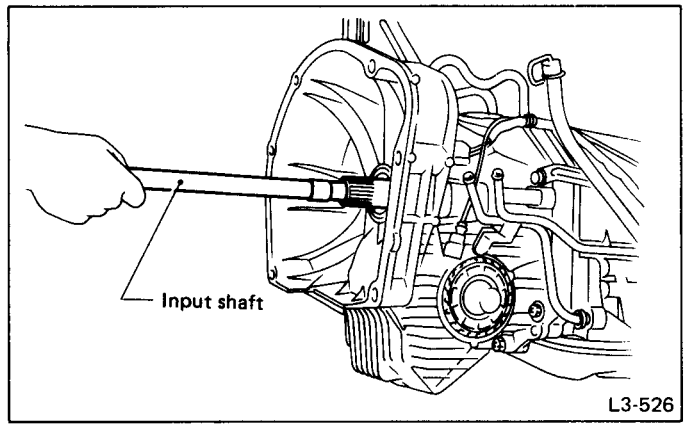

Fig. 118

6) Remove the pitching stopper bracket.

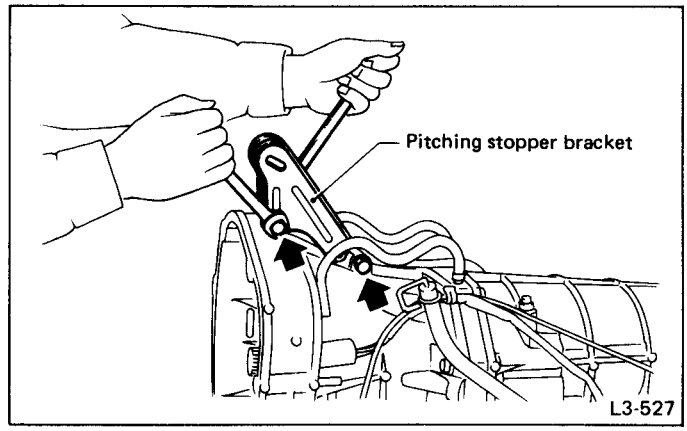

Fig. 119

7) Disconnect the air breather hose.
No. of hoses 4WD: 2
FWD: 1

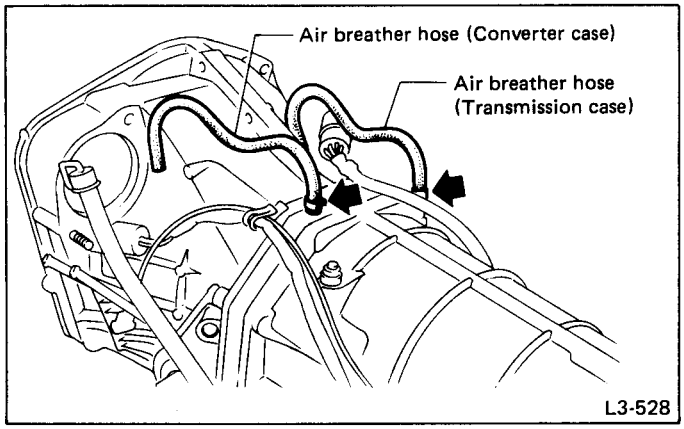

Fig. 120

8) Remove the oil charger pipe, and remove the O-ring from the flange face. Attach the O-ring to the pipe.

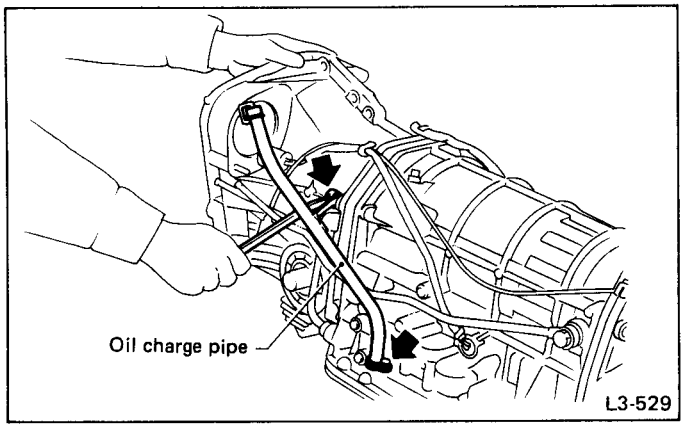

Fig. 121

9) Remove the oil cooler inlet and outlet pipes.

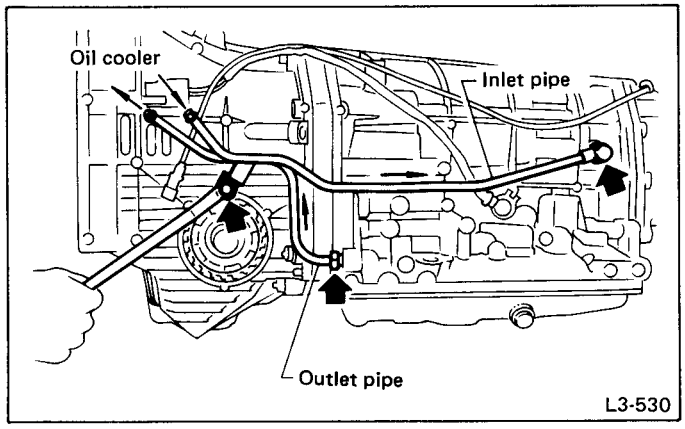

Fig. 122

10) Remove clips from the harnesses.
No. of harnesses 4WD: 3
FWD: 2

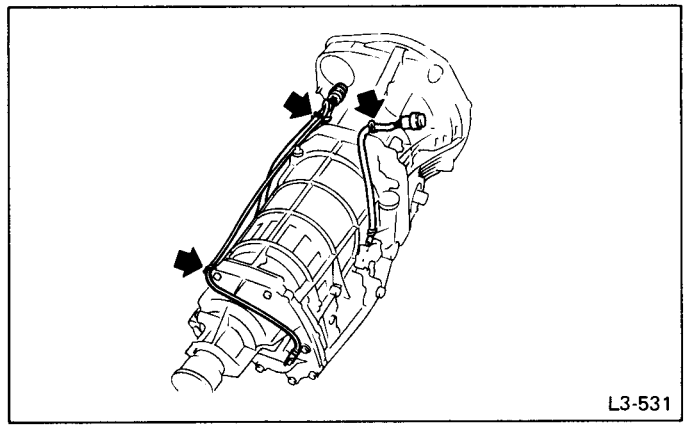

Fig. 123

2. Separation of Converter Case and Transmission Case Sections

a. Separate these cases while tapping lightly on the housing.
b. Be careful not to damage the oil seal and bushing inside the converter case by the oil pump cover.

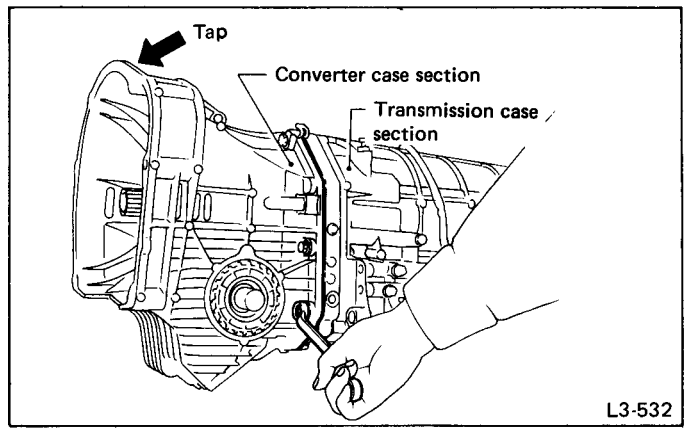

Fig. 124

3. Separation of Transmission Case and Extension Sections (4WD)/ Transmission Cover Sections (FWD)

1) Remove the revolution sensor. (4WD)

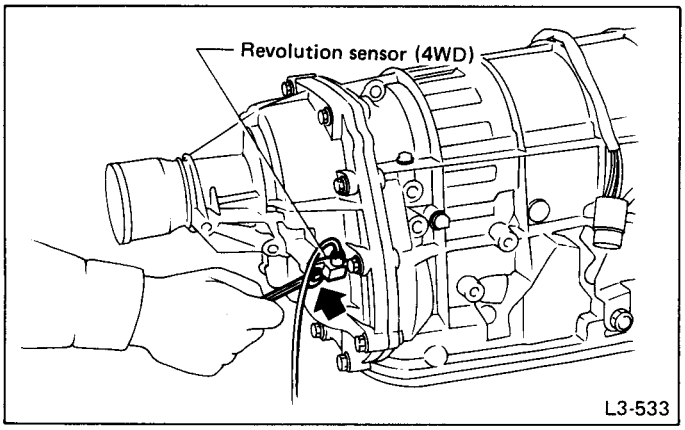

Fig. 125

2) While pulling the extension slightly, disconnect the connector for the duty solenoid C (transfer).

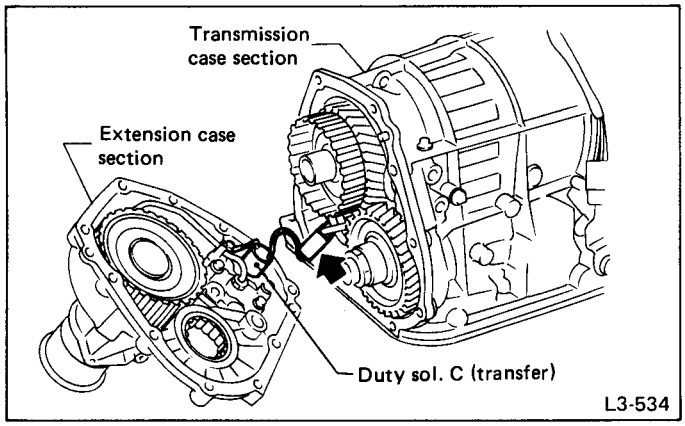

Fig. 126

3) Separate both sections.

4. Transmission Case Section

1) Remove the reduction drive gear ASSY.

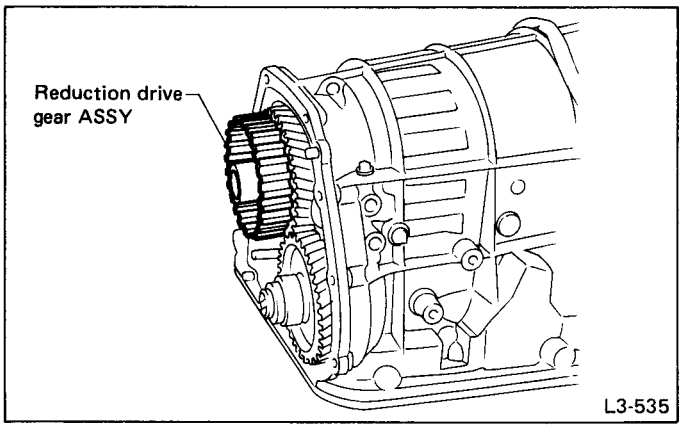

Fig. 127

2) Remove the reduction driven gear:
(1) Straighten the staked portion, and remove the lock nut.

Set the range selector lever to "P".

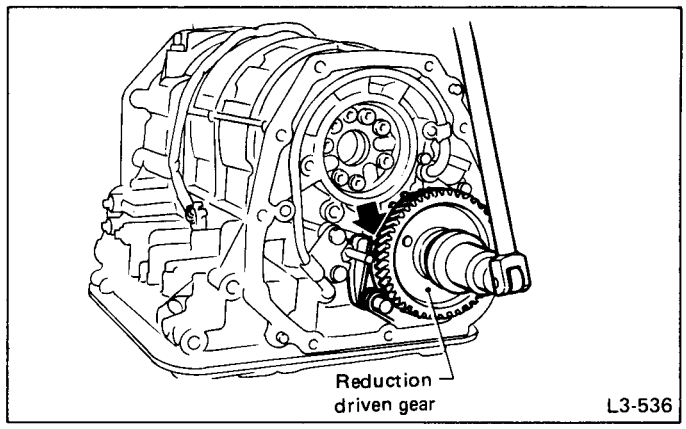

Fig. 128

(2) Using the PULLER SET (899524100), extract the reduction driven gear.

Drill two holes in the puller.

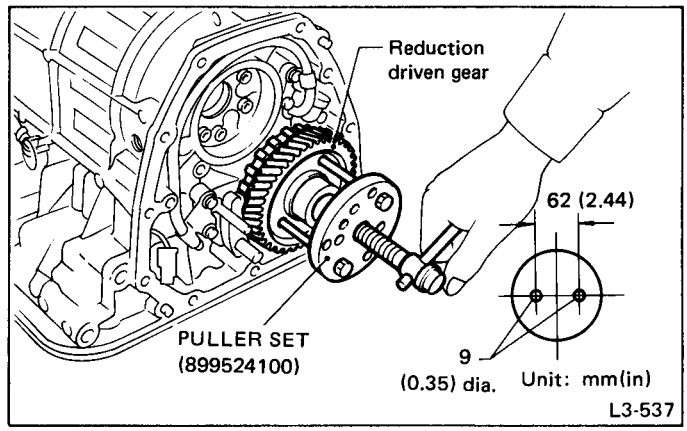

Fig. 129

3) Remove the parking pawl, return spring and shaft.

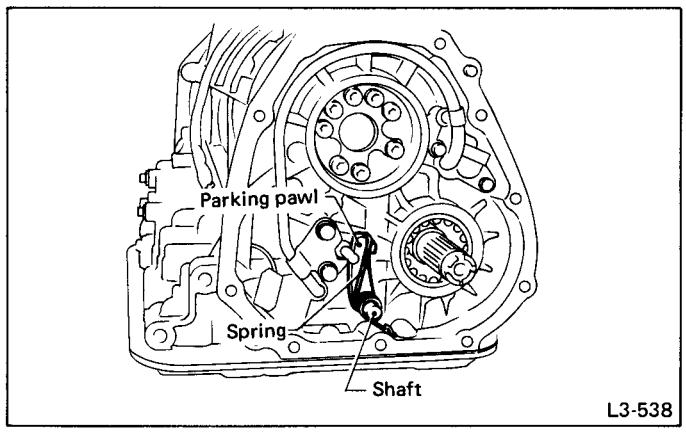

Fig. 130

4) Remove the revolution sensor. (FWD)

Keep the sensing element in the transmission case.

5) Loosen the taper roller bearing mounting bolts.

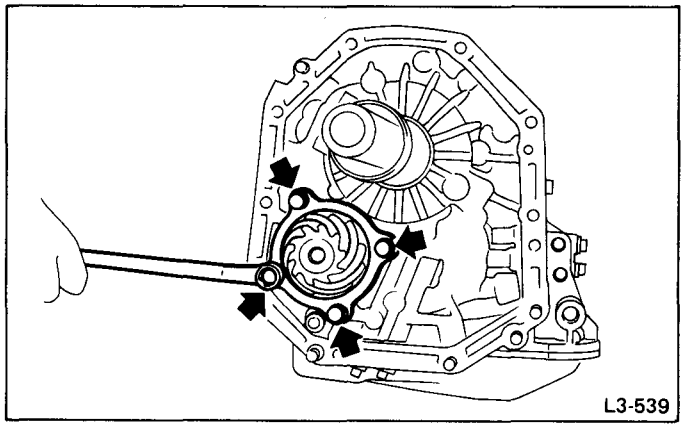

Fig. 131

6) Place two wooden blocks on the workbench, and stand the transmission case with its rear end facing down.

a. Be careful not to scratch the rear mating surface of the transmission case.
b. Note that the parking rod and drive pinion protrude from the mating surface.

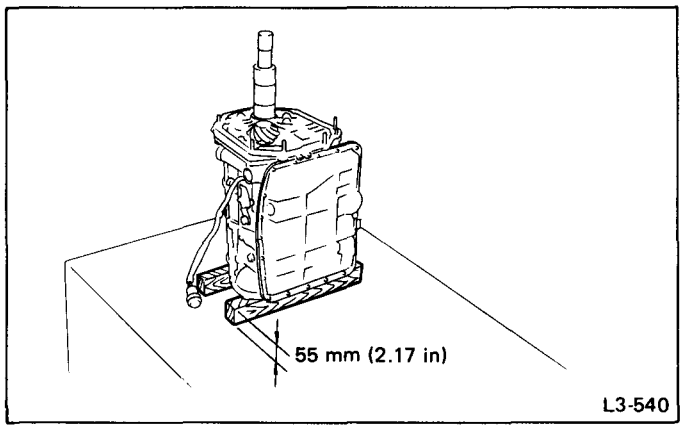

Fig. 132

7) Remove the oil pan and gasket.

Tap the corners of the oil pan when removing.

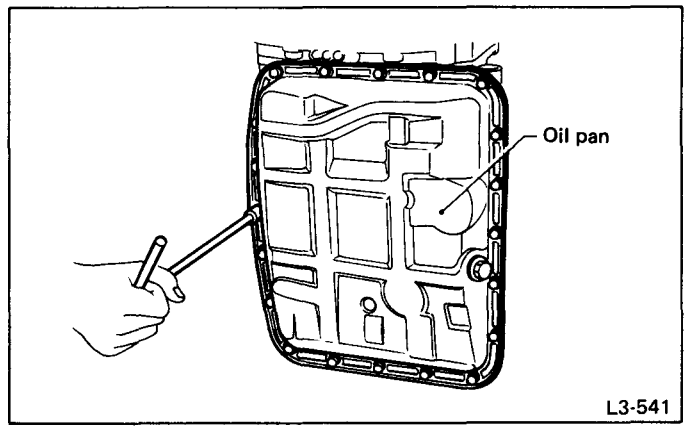

Fig. 133

8) Remove the oil cooler outlet pipe.

Be careful not to twist the pipe.

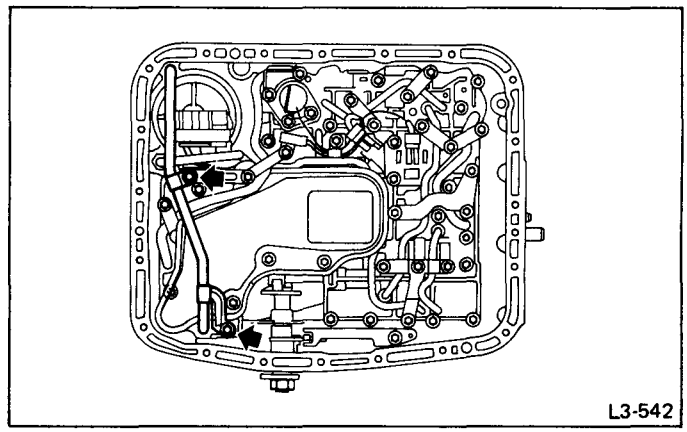

Fig. 134

9) Disconnect the harness connectors for the solenoids and duty solenoids and the ground cord.

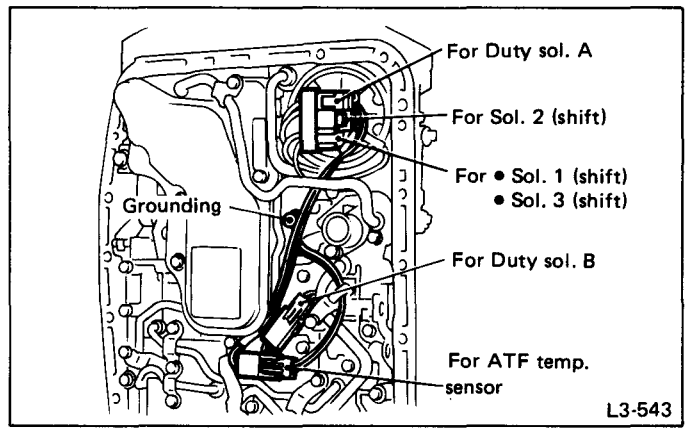

Fig. 135

10) Remove the oil strainer.

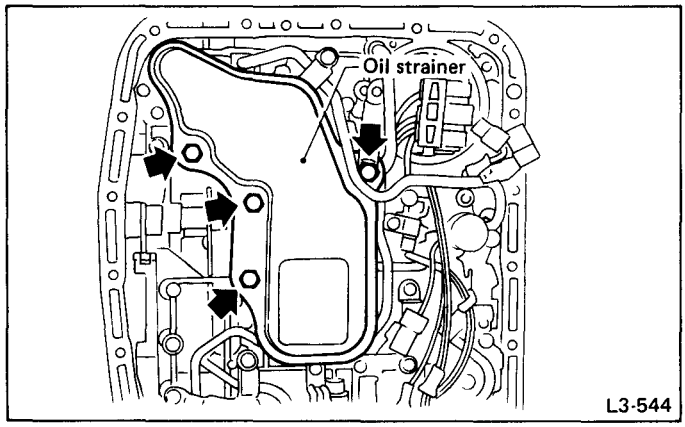

Fig. 136

Be careful not to damage O-ring on oil strainer.

11) Remove the control valve body.

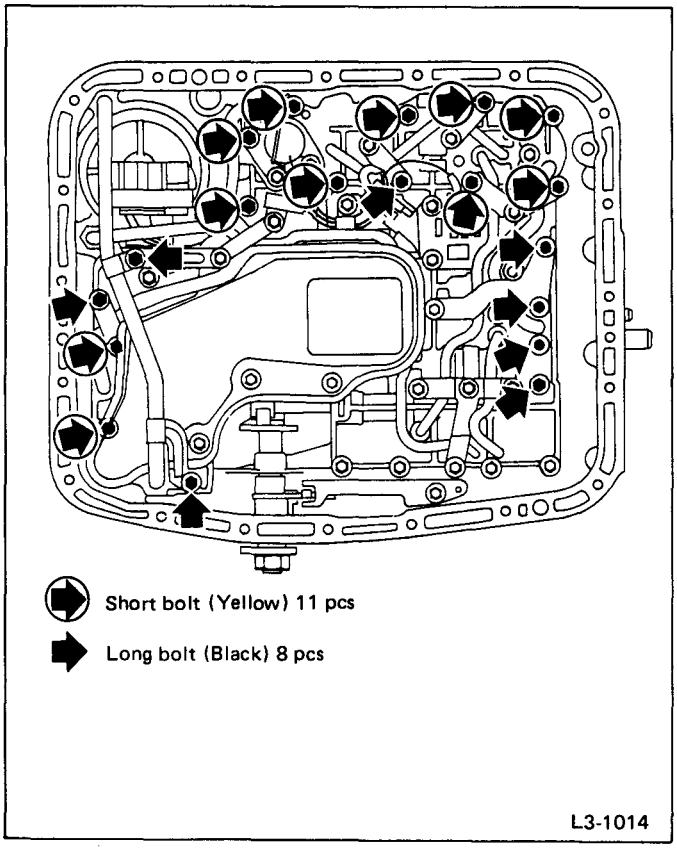

Fig. 137

12) Remove three accumulator springs.

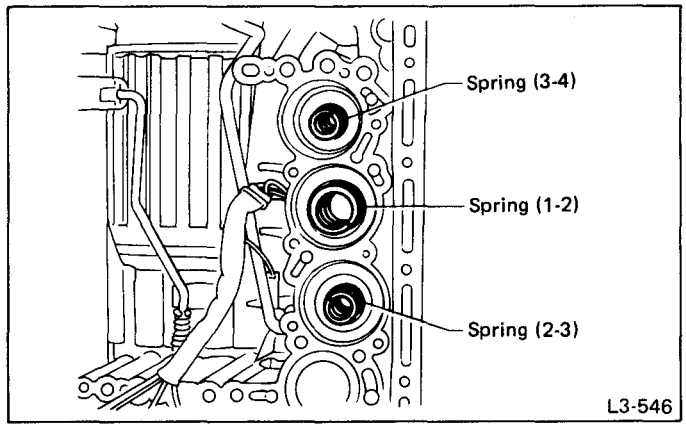

Fig. 138

13) Loosen the reverse clutch drum lightly by turning the adjusting screw. Then remove the oil pump housing.

Be careful not to lose the total end play adjusting thrust washer.

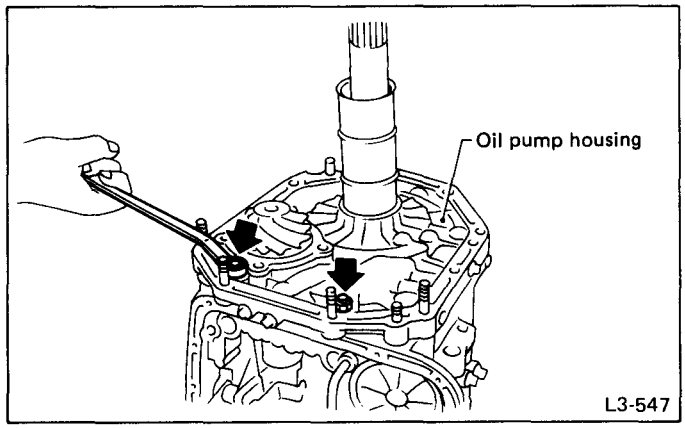

Fig. 139

14) Loosen the brake band adjusting screw, and take out the strut.

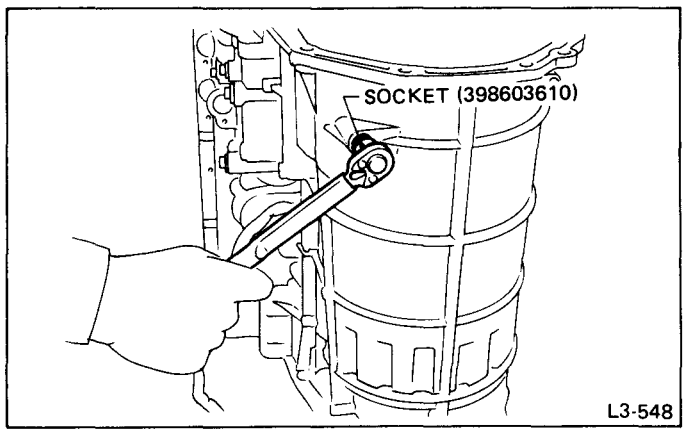

Fig. 140

15) Remove the brake band and reverse clutch.

Contract the brake band with a clip.

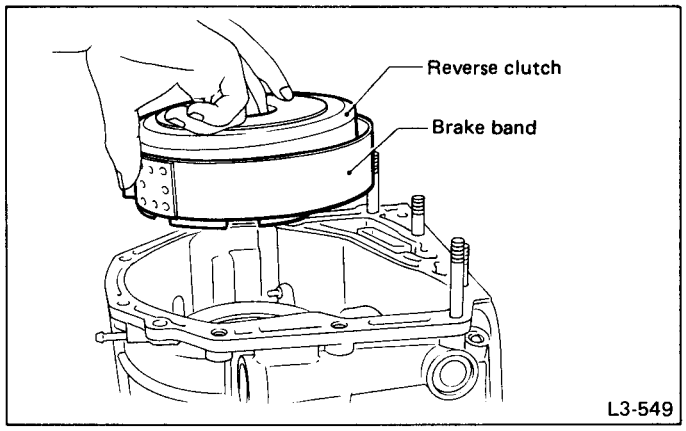

Fig. 141

16) Take out the high clutch.

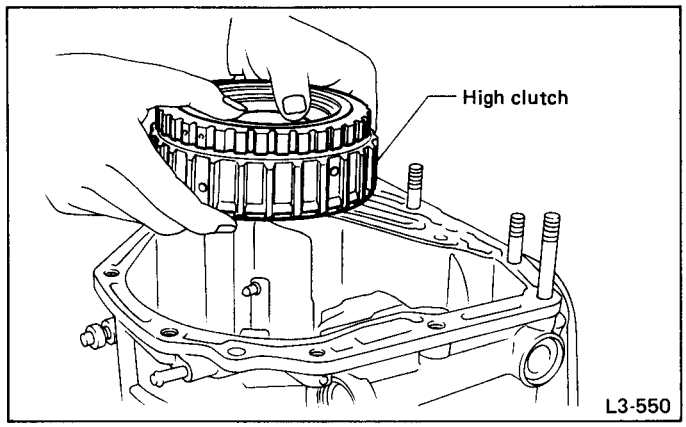

Fig. 142

17) Take out the high clutch hub.

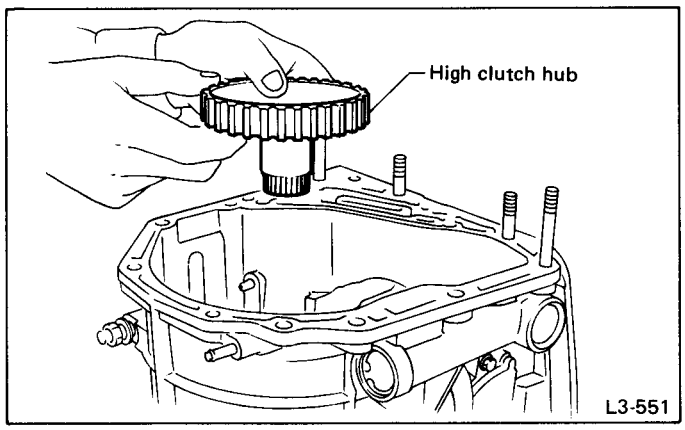

Fig. 143

18) Take out the front sun gear.

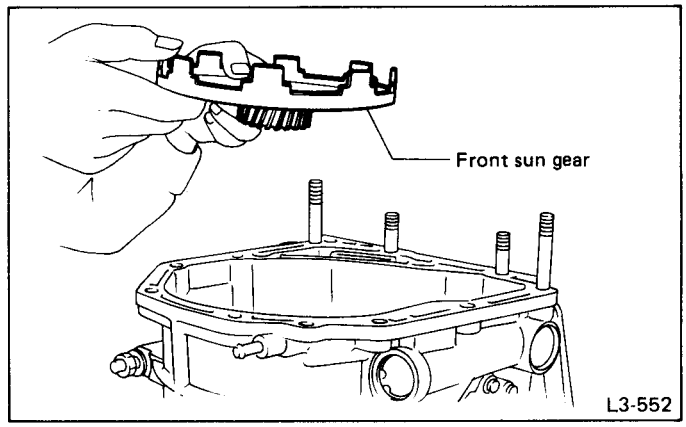

Fig. 144

19) Take out the front planetary carrier.

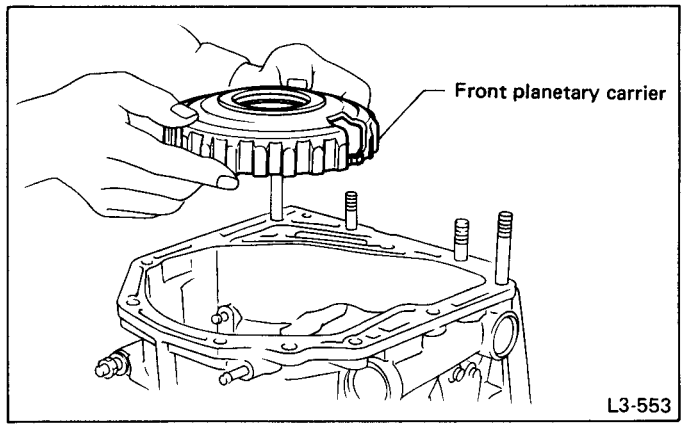

Fig. 145

20) Take out the rear planetary carrier and rear sun gear.

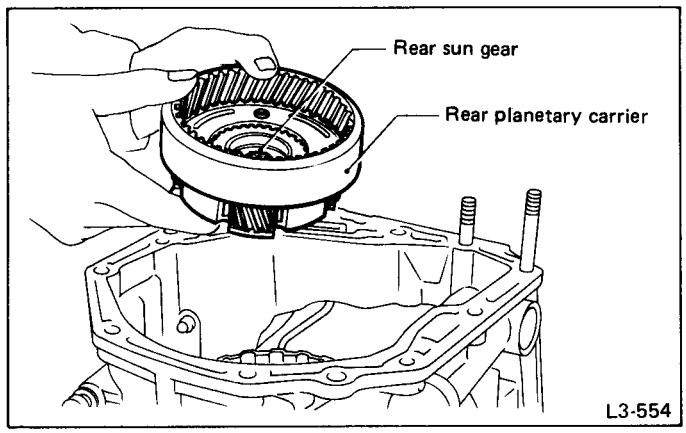

Fig. 146

21) Take out the rear internal gear.

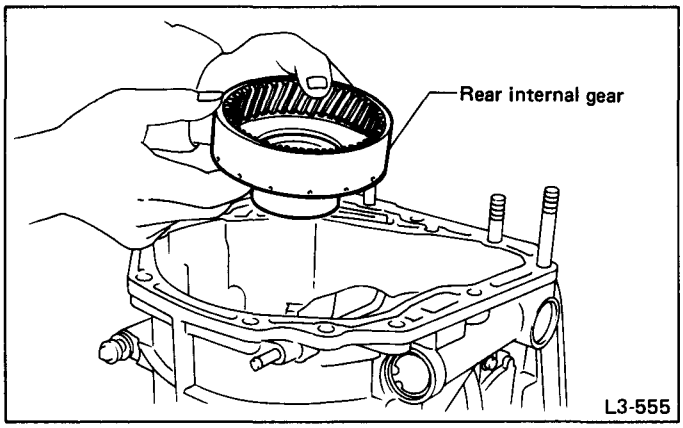

Fig. 147

22) Take out the one-way clutch outer race.

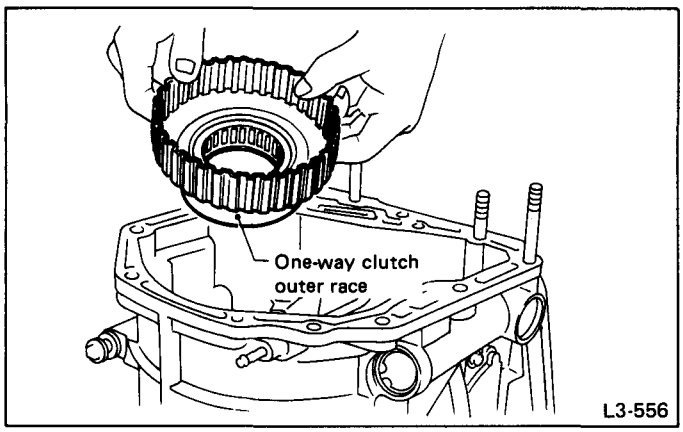

Fig. 148

23) Take out the overrunning clutch hub.

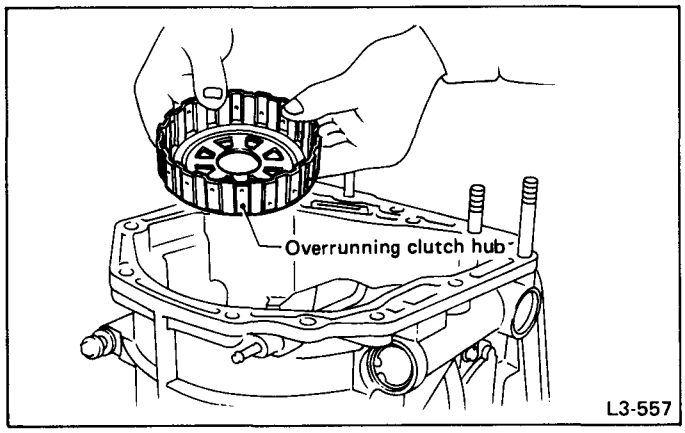

Fig. 149

24) Take out the forward clutch drum.

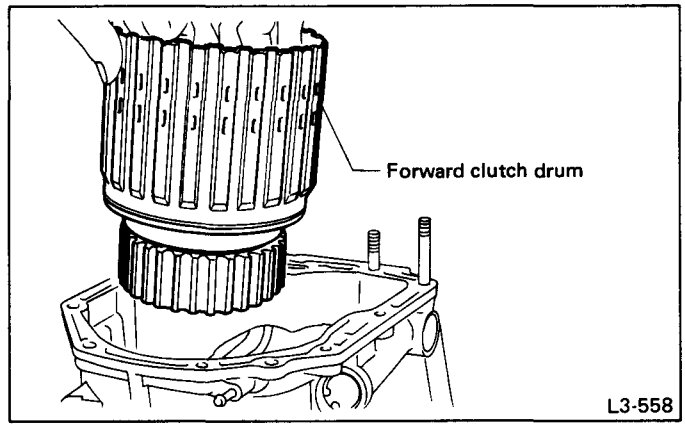

Fig. 150

25) Take out the low & reverse brake section.
(1) Remove the snap ring. Then remove the retaining plate, drive plates, driven plates, and dish plates as a unit.

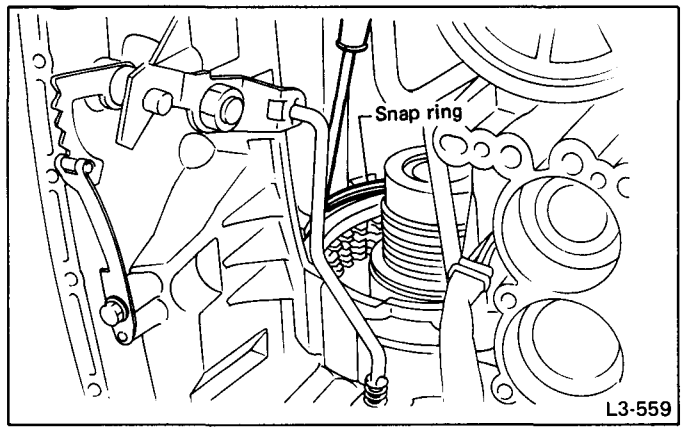

Fig. 151

(2) Turning the case upside down, take out the one-way clutch inner race and spring retainer CP.

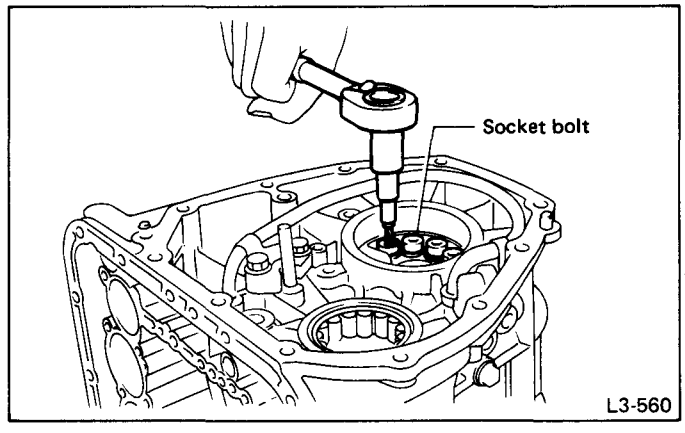

Fig. 152

(3) Take out the low & reverse piston by applying compressed air.

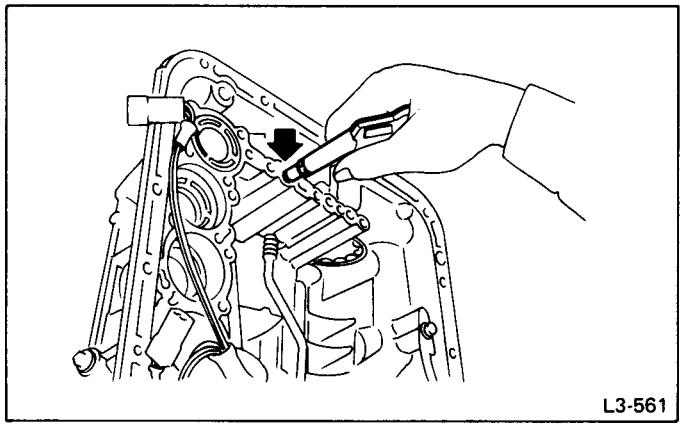

Fig. 153

26) After removing the snap ring (inner), take out the servo piston by applying compressed air from the release pressure side.

Hold the servo piston with a rag so that it will not be ejected with the air pressure. In this case, do not allow your finger to be pinched between the pipe and retainer.

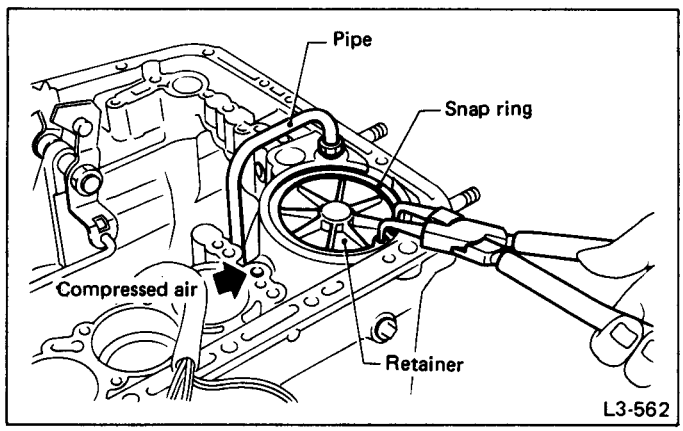

Fig. 154

27) Apply compressed air from the operating pressure side, and take out accumulator (3-4), accumulator (1-2), accumulator (2-3), and accumulator (N-D).

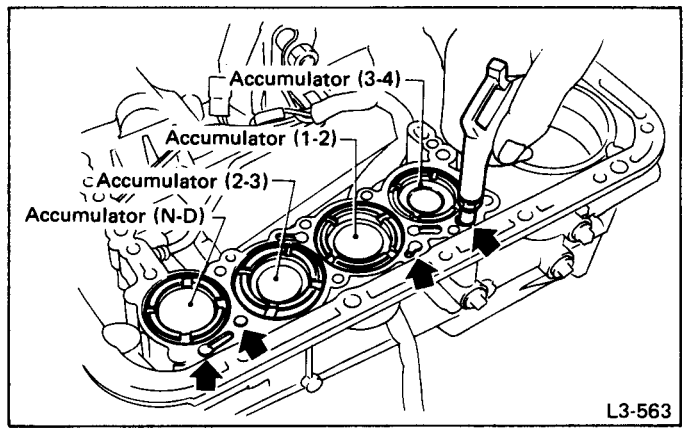

Fig. 155

28) Remove the range select lever.
29) Remove the detent spring.

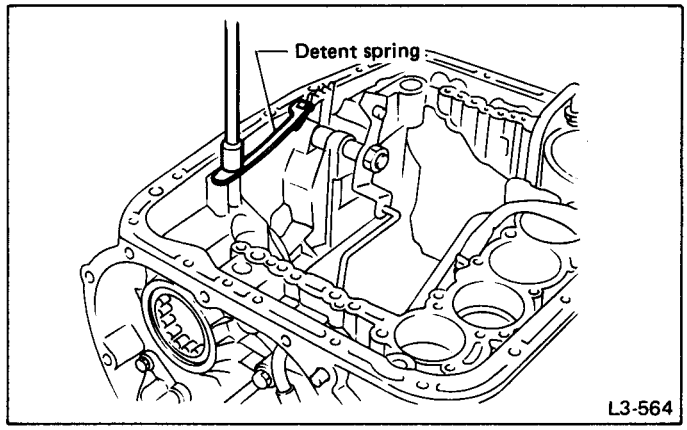

Fig. 156

30) Remove the parking rod together with the manual lever. Then remove the manual shaft by pulling off the straight pin.

Be careful not to damage the lips of the press-fitted oil seal in the case.

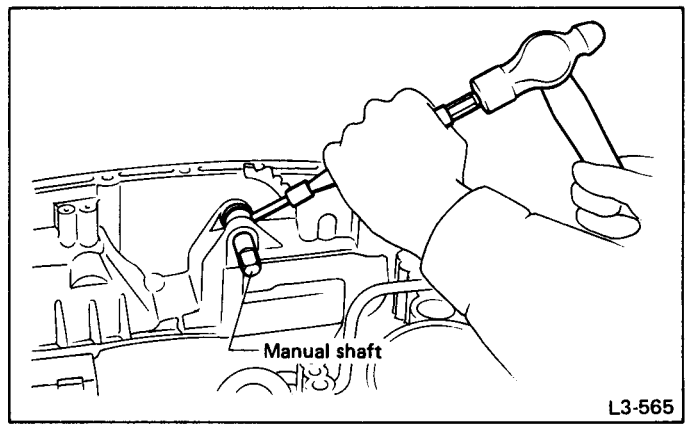

Fig. 157

31) Remove the inhibitor switch.

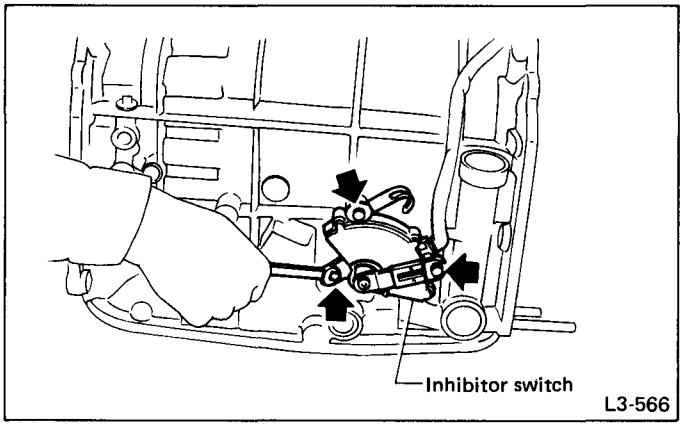

Fig. 158

32) Remove the transmission harness.

Be careful not to damage the cord insulation.

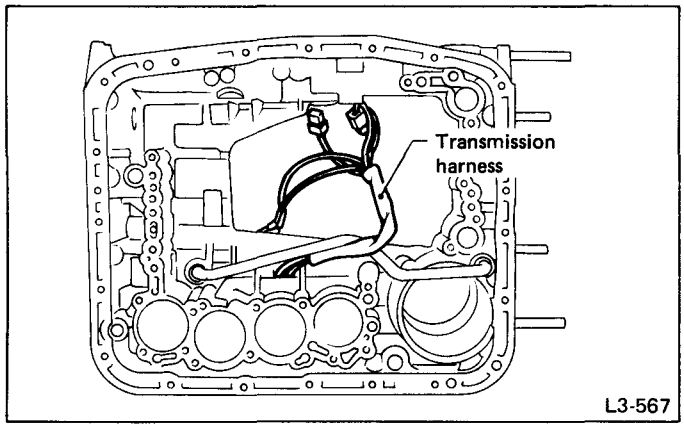

Fig. 159

5. Converter Case Section

1) Wrap the axle-shaft serration with vinyl tape.

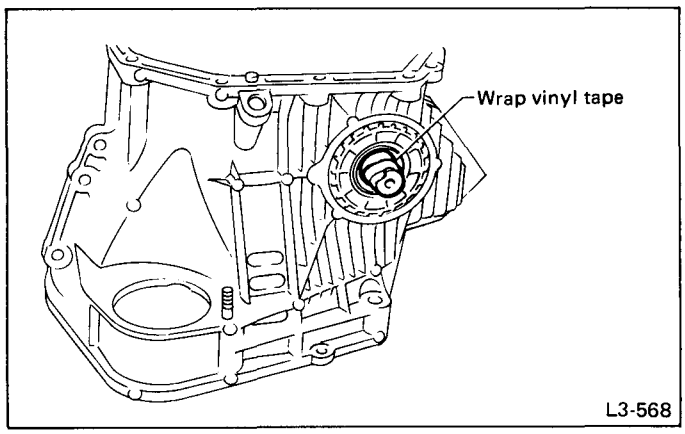

Fig. 160

2) Remove the differential side retainer.

Hold the differential case ASSY by hand to avoid damaging retainer mounting hole of the converter case and speedometer gears.

3) Extract the axle shaft.

Do not reuse the circlip.

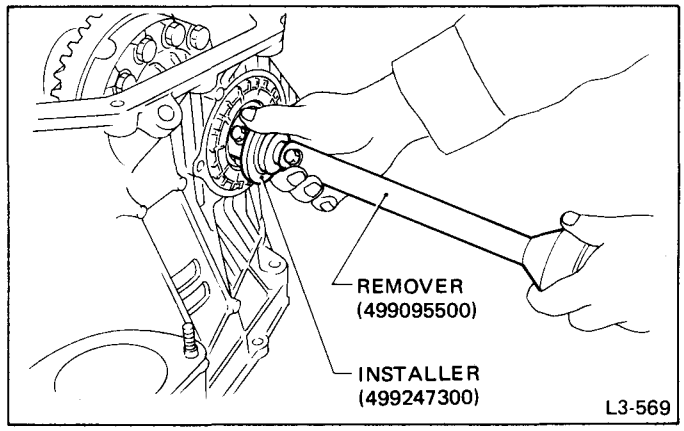

Fig. 161

4) Remove the differential case ASSY.

a. Remove the seal pipe if it is attached. (Reusing is not allowed.)
b. Be careful not to damage the retainer mounting hole of the converter case and the speedometer gears.

5) Remove the snap ring. Then remove the speedometer driven gear.

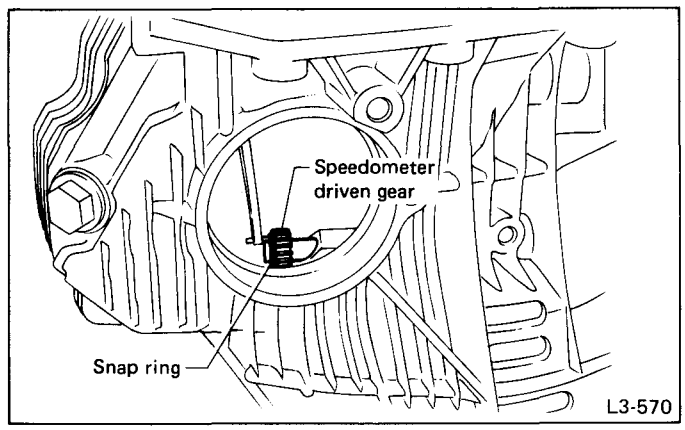

Fig. 162

6) Tap out the speedometer shaft to the outside of the case, and remove the oil seal.

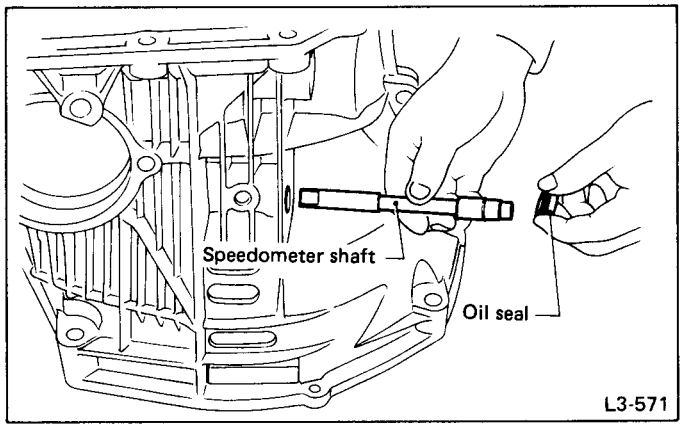

Fig. 163

6. Extension Section

1) Take out the transfer clutch by lightly tapping the end of the rear drive shaft.

Be careful not to damage the oil seal in the extension.

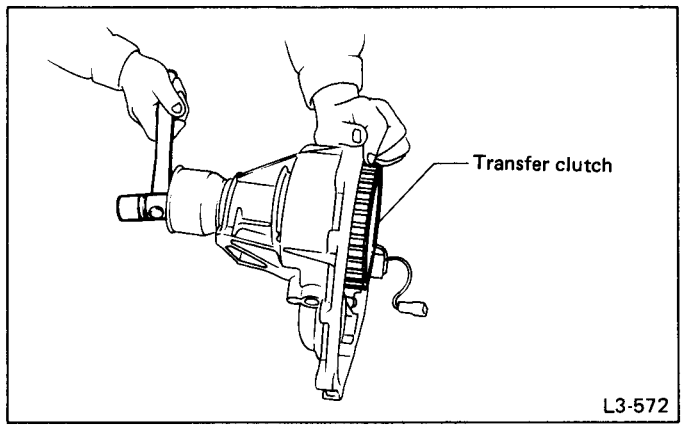

Fig. 164

2) Remove the transfer pipe.

Be careful not to bend the pipe.

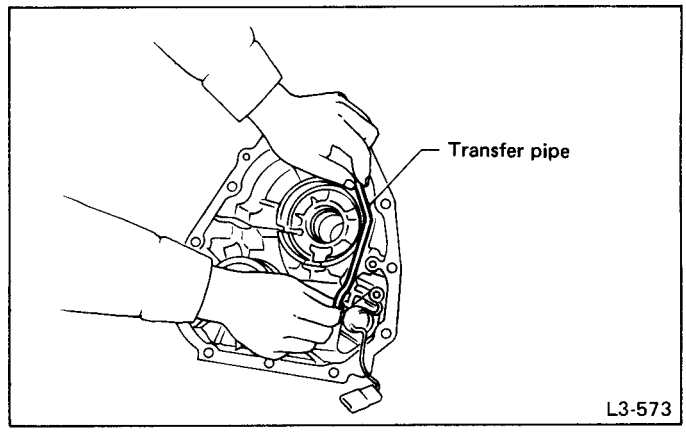

Fig. 165

3) Remove duty solenoid C and the transfer valve body.

a. Take out the inlet filter.
b. Do not damage the O-ring.

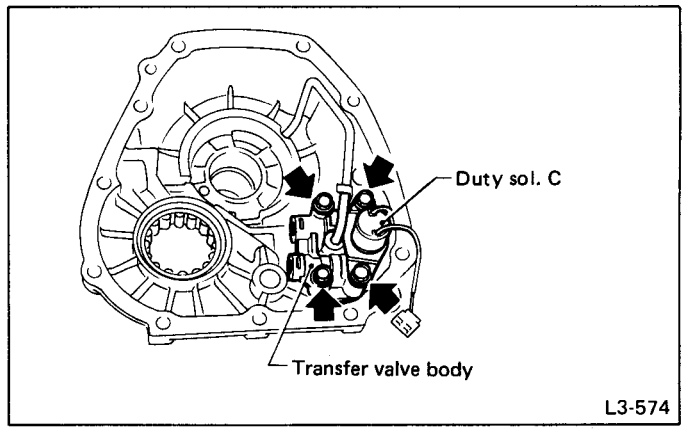

Fig. 166

4) Take out the roller bearing.

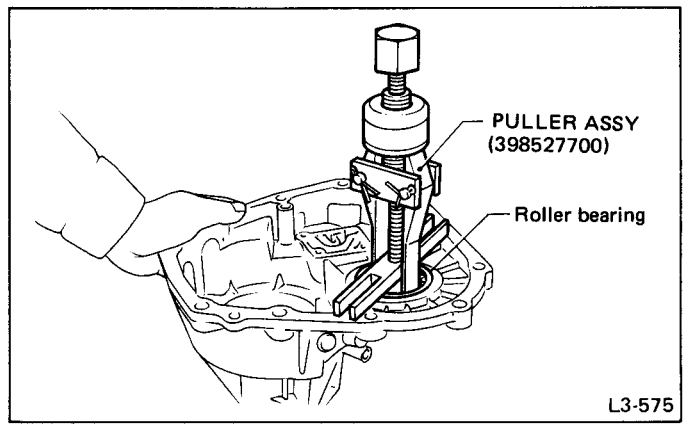

Fig. 167

3 Disassembly, Inspection and Assembly of Each Component

1. Reduction Drive Gear Assembly

DISASSEMBLY

1) Take out the seal rings.

Be careful not to damage the seal rings.

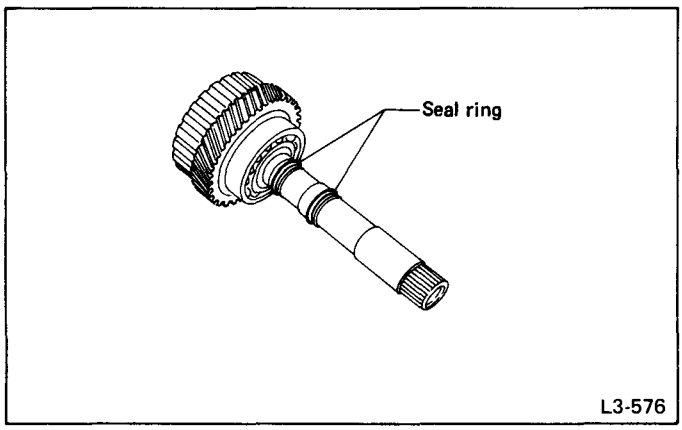

Fig. 168

2) Take out the snap ring (out).

Be careful not to damage the splines.

3) Using a press, remove the reduction drive gear.

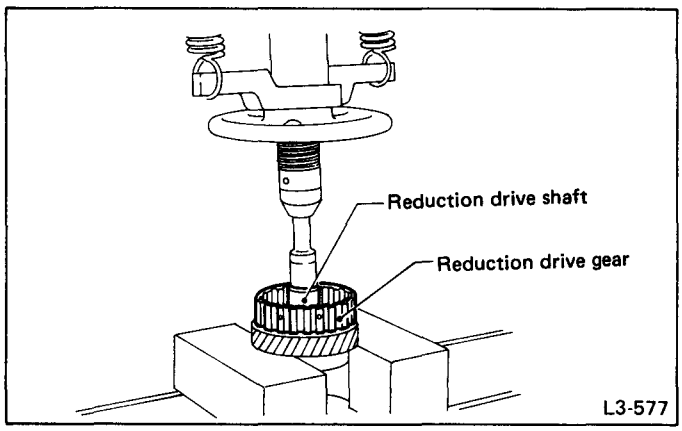

Fig. 169

4) Using a press, remove the ball bearing.

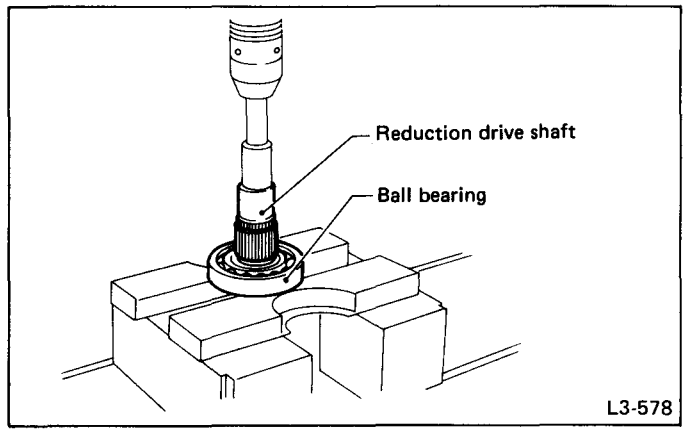

Fig. 170

INSPECTION

Make sure that each component is free of harmful gouges, cuts, or dust.

ASSEMBLY

1) Press-fit the ball bearing and reduction drive gear to the shaft.

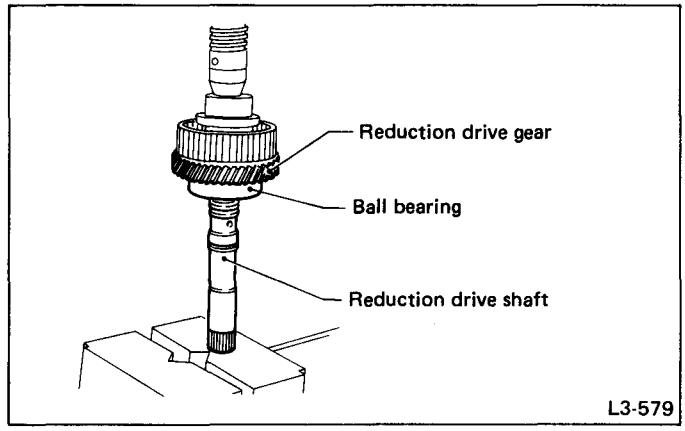

Fig. 171

2) 4WD: Fit the snap ring securely in the snap ring groove on the shaft.
FWD: Press-fit the ball bearing using a press, then fit the snap ring to the snap ring groove on the shaft.
3) Attach two seal rings.

To make subsequent assembly easier, apply vaseline to the grooves of the shaft and to the exterior of the seal ring.

2. Control Valve Body

DISASSEMBLY

1) Remove the following parts from the upper valve body.
   (1) Solenoid ASSY (shift 1-2-3)
   (2) Duty solenoid A (line pressure)

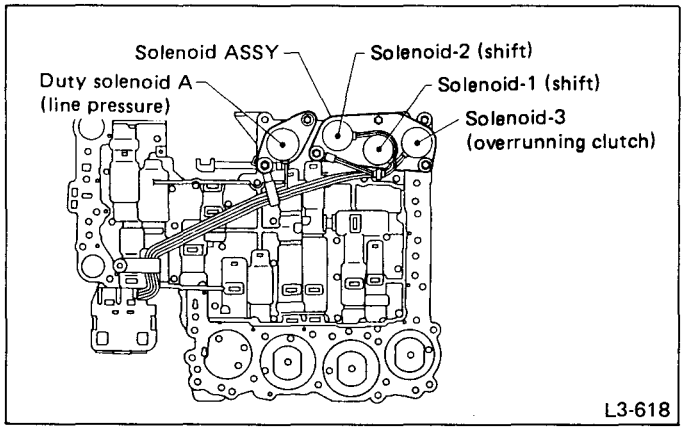

Fig. 172

2) Remove the following parts from the lower valve body.
   (1) Duty solenoid B (lock-up)
   (2) ATF temperature sensor

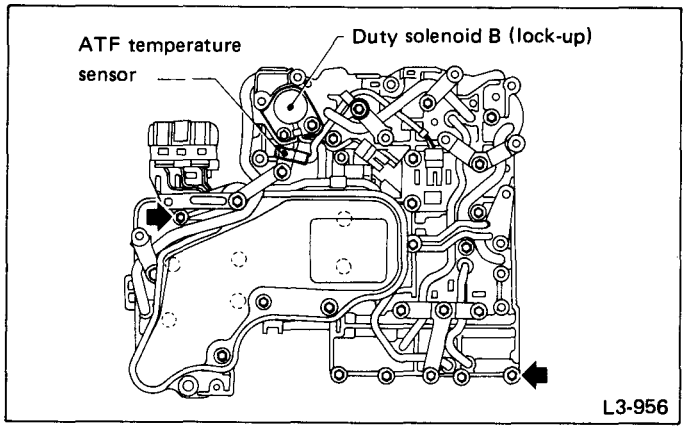

Fig. 173

3) Separate the upper valve body and lower valve body.

a. Do not lose the nine (9) steel balls contained in the upper valve body.
b. Do not lose an orifice and a strainer contained in the lower valve body.
c. Remove the upper-lower valve body tightening bolts. Then remove two locating bolts. (➡)

During ordinary servicing, clean the control valve bodies in this condition, without further disassembly.
In the event of a seized clutch or other problem, disassemble the control valve bodies further, and clean the component parts.

INSPECTION

Make sure that each component is free of harmful gouges, cuts, or dust.

ASSEMBLY

Reverse the disassembly sequence, paying attention to the following points:

a. Be sure to properly position the steel balls, orifice and strainer.

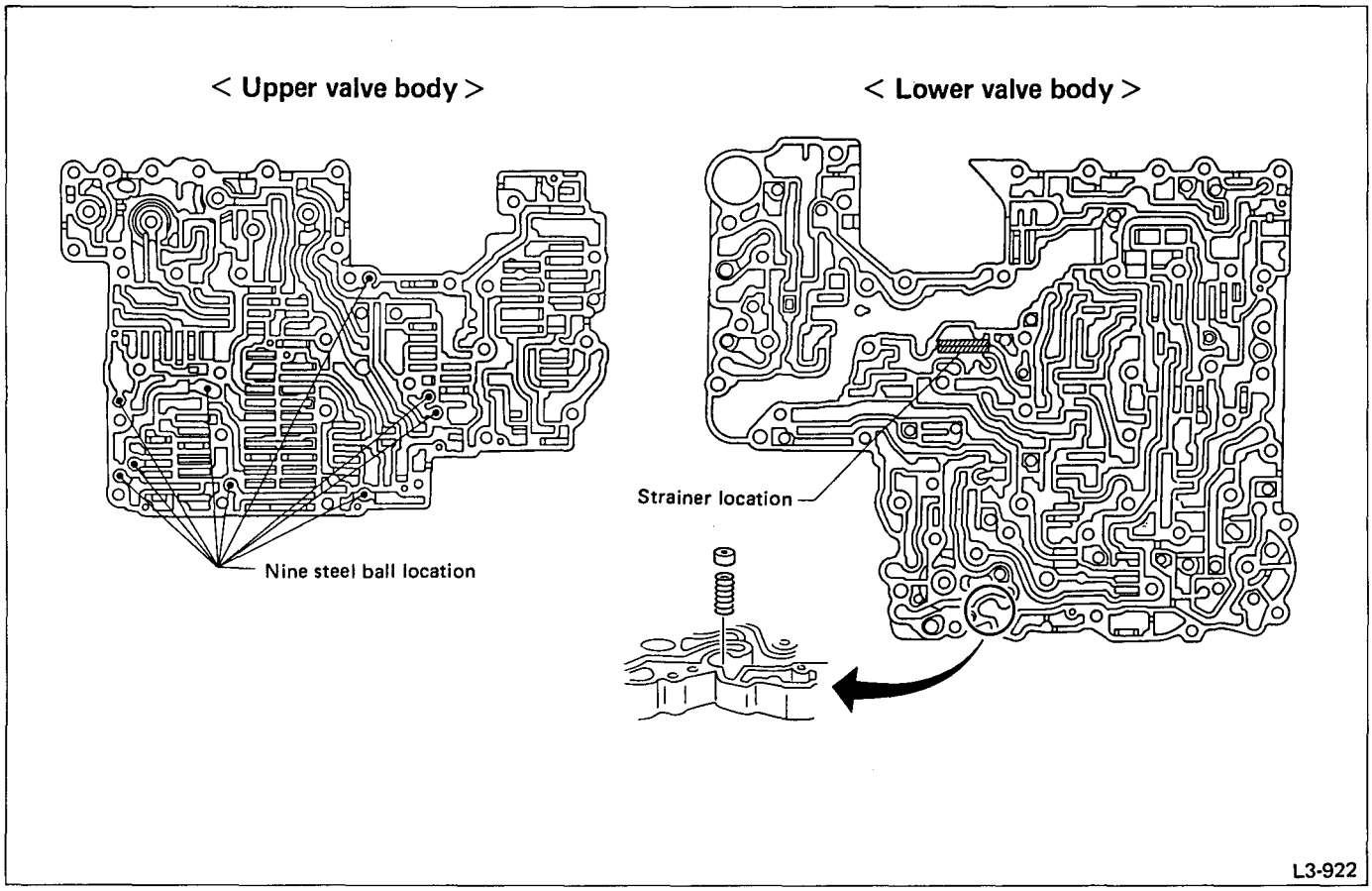

Fig. 174

b. Tighten two locating bolts. Then tighten the upper-lower valve body tightening bolts.

Tightening torque:
7 – 9 N·m (0.7 – 0.9 kg-m, 5.1 – 6.5 ft-lb)

3. Oil Pump Assembly

DISASSEMBLY

1) Remove the oil seal retainer.
Also remove the O-ring and oil seal (air breather).

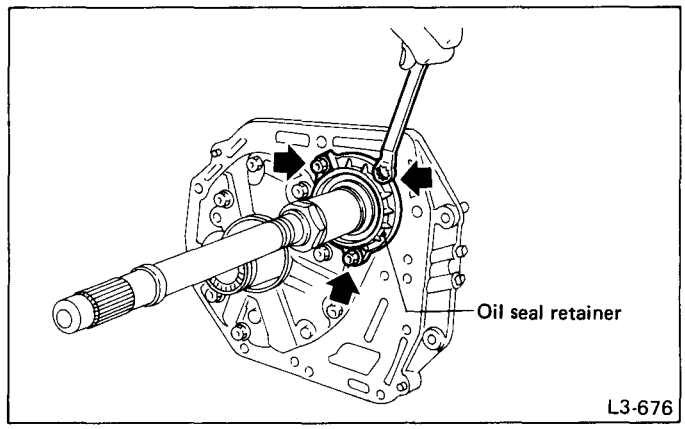

Fig. 175

2) Remove the oil pump cover.

Lightly tap the end of the stator shaft to remove the cover.

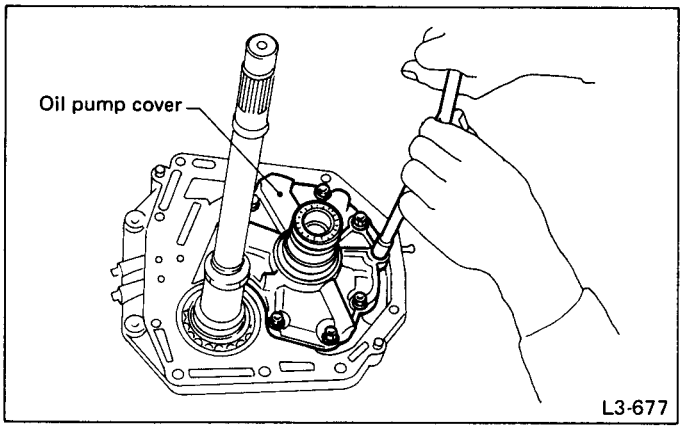

Fig. 176

3) Remove the retainer and return spring. Then remove the rotor, two vane rings and nine vanes.

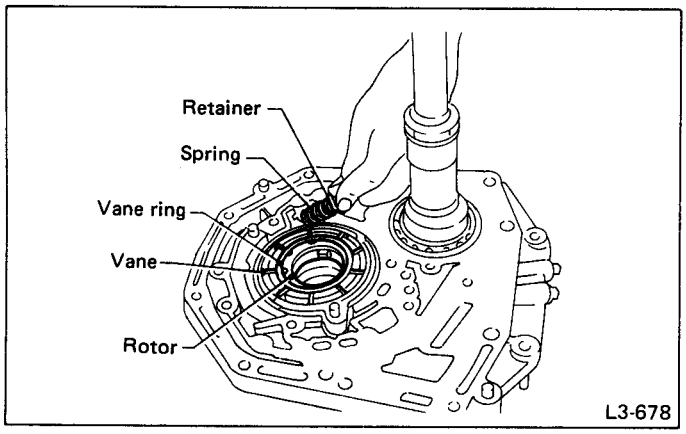

Fig. 177

4) Remove the cam ring and control piston.
Also remove the O-ring, friction ring, two side seals, and plain seal.

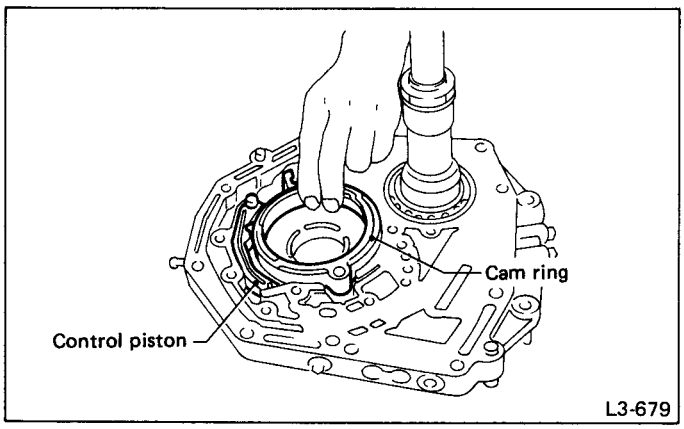

Fig. 178

5) Remove two seal rings (R) and two seal rings (H).

INSPECTION

1) Make sure that each component is free of harmful gouges, cuts, and dust.
2) Selection of oil pump components (rotor, vanes, control piston and cam ring):
   (1) Using a micrometer, measure the height of the rotor, vanes, control piston and cam ring in at least four positions. (Measure the height at one place for each of the nine vanes.)

a. Remove the control piston seals when measuring.
b. Remove the friction ring from the cam ring when measuring.

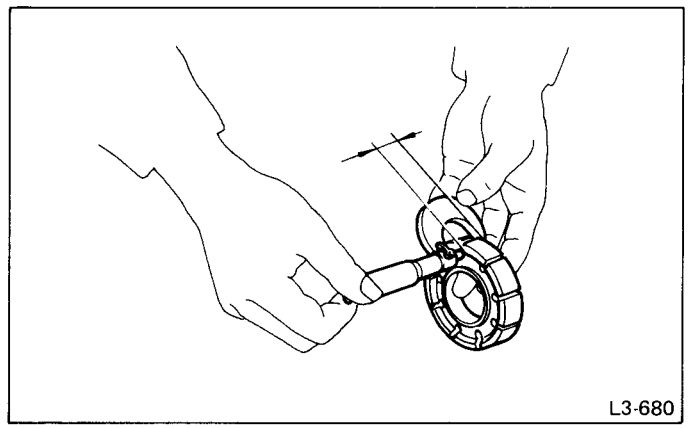

Fig. 179

(2) Using a depth gauge, measure the depth of the oil pump housing from the contact/sliding surface of the above-mentioned component parts in the same manner as above.

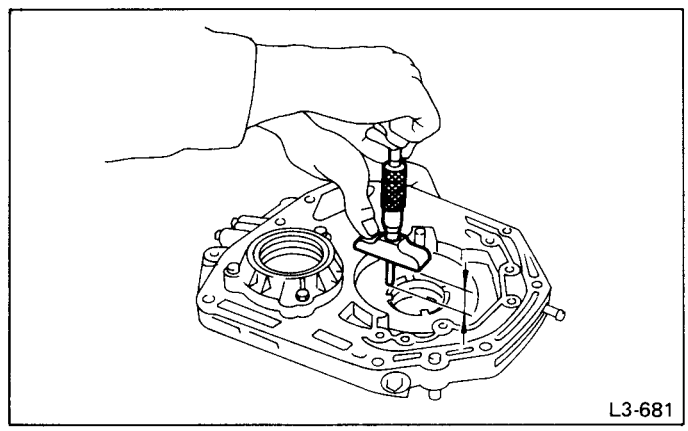

Fig. 180

(3) Make sure that the clearances are within the specified wear limits. If the wear limit is exceeded, select pump components so that the standard clearance can be obtained.

	Wear limit	Standard value
Rotor, control piston, vanes	0.054 mm (0.0021 in)	0.030 – 0.044 mm (0.0012 – 0.0017 in)
Cam ring	0.034 mm (0.0013 in)	0.010 – 0.024 mm (0.0004 – 0.0009 in)

Select vanes which are the same height as the rotor.

ASSEMBLY

1) Coat both the O-ring and friction ring with vaseline and attach to the cam ring. Then fit them into the oil pump housing.

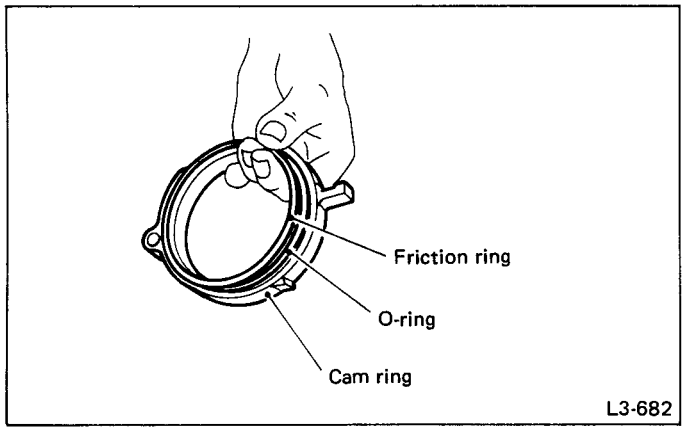

Fig. 181

2) Install the vane ring, rotor, vanes, and vane ring into the housing in this sequence.

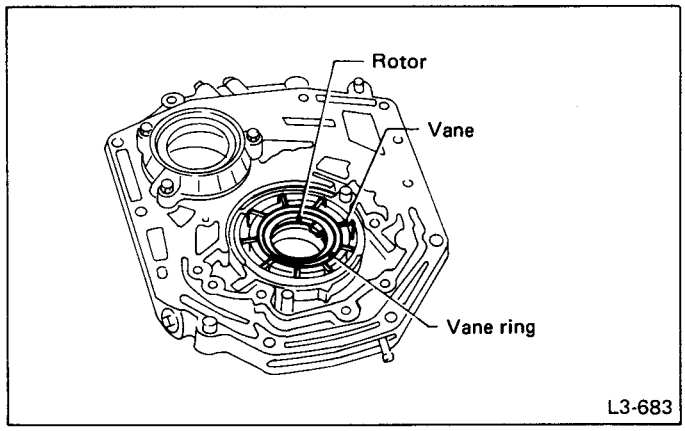

Fig. 182

3) Install the return spring and retainer between the housing and cam ring.

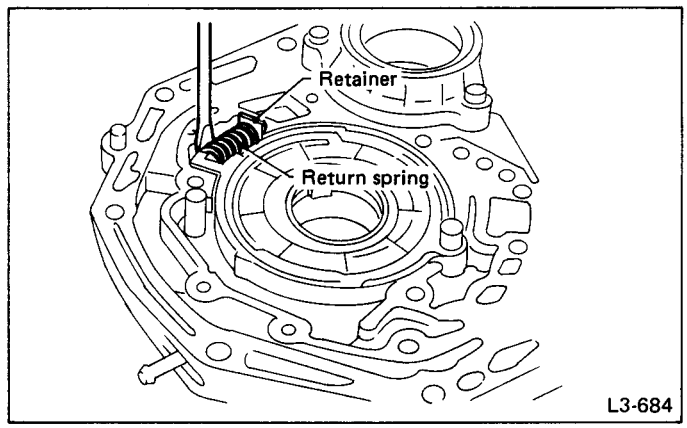

Fig. 183

4) Install the control piston to the oil pump housing.

Fit the seal in the piston groove, with the red seals facing the top side. (Two side seals and one plain seal are attached.)

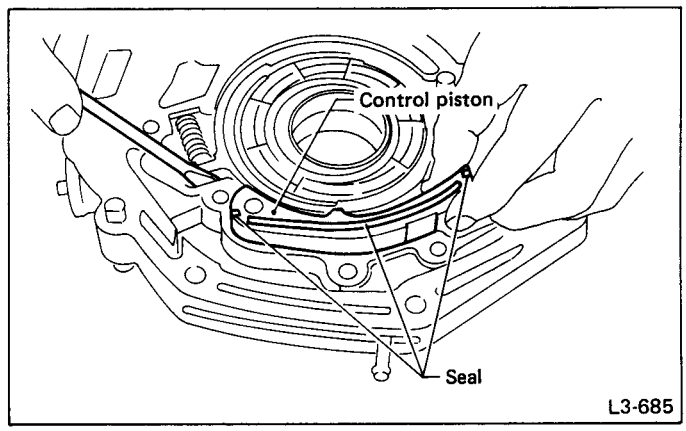

Fig. 184

5) Set the rotor at the center of the housing bore. Apply ATF abundantly to each rotary portion.
6) Install the oil pump cover.

Tightening torque:
25 ± 2 N·m (2.5 ± 0.2 kg-m, 18.1 ± 1.4 ft-lb)

a. Align both pivots with the pivot holes of the cover, and install the cover being careful not to apply undue force to the pivots.
b. After assembling, turn the oil pump shaft to check for smooth rotation of the rotor.

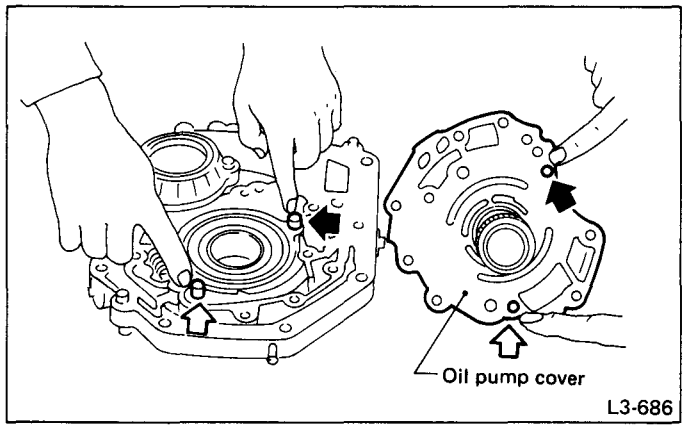

Fig. 185

Install the oil seal retainer and seal rings (R) and (H) after adjusting the drive pinion backlash and tooth contact.

4. Drive Pinion Shaft

DISASSEMBLY

1) Straighten the staked portion of the lock nut, and remove the lock nut while locking the rear spline portion of the shaft. Then pull off the drive pinion collar.

Remove the O-ring

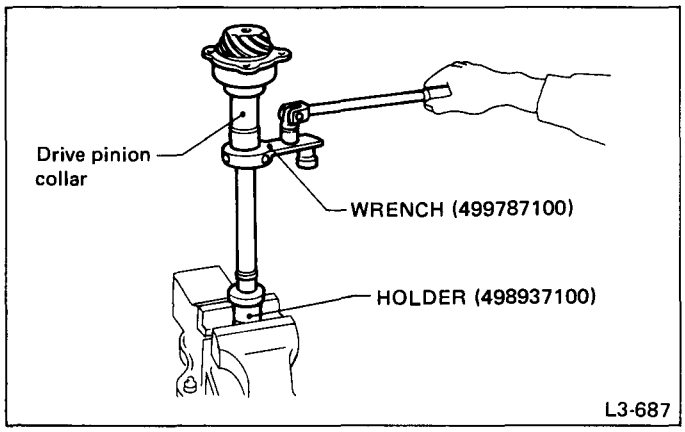

Fig. 186

2) Using a press, separate the rear roller bearing and outer race from the shaft.

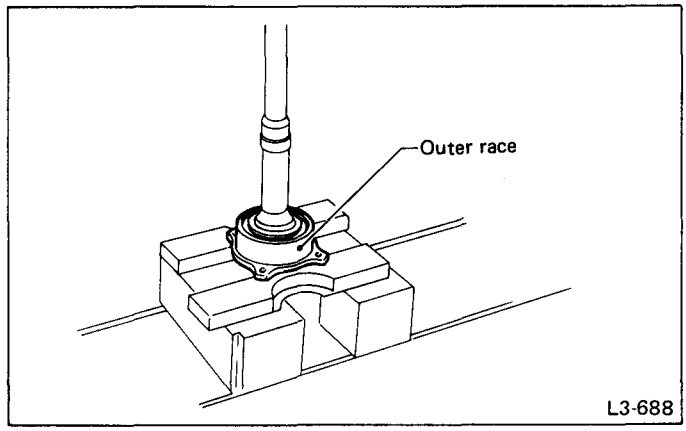

Fig. 187

3) Using a press, separate the front roller bearing from the shaft.

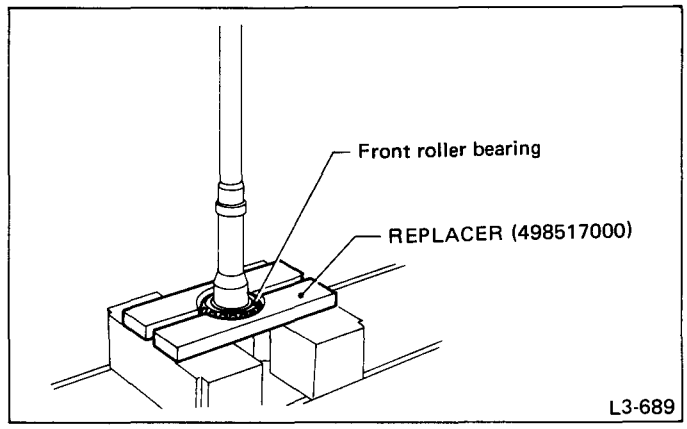

Fig. 188

INSPECTION

Make sure that all component parts are free of harmful cuts, gouges, and other faults.

ASSEMBLY

1) Measure dimension "A" of the drive pinion shaft.

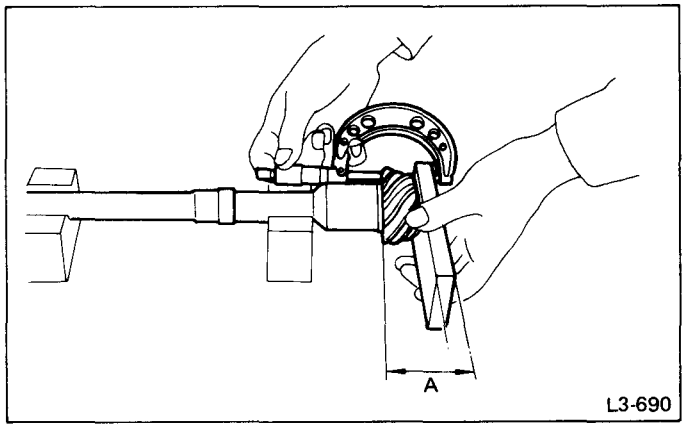

Fig. 189

2) Using a press, force-fit the roller bearing in position.

Do not change the relative positions of the outer race and bearing cone.

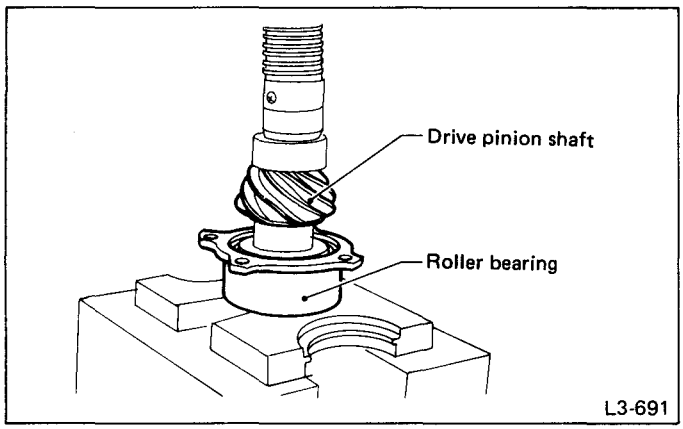

Fig. 190

3) After fitting the O-ring to the shaft, attach the drive pinion collar to the shaft. Be careful not to damage the O-ring.
4) Tighten the lock washer and lock nut.

Actual tightening torque:
113 ± 5 N·m (11.5 ± 0.5 kg-m, 83.2 ± 3.6 ft-lb)

a. Pay attention to the orientation of lock washer.
b. When using special tool WRENCH (499787100) and torque wrench, tighten it to 88 N·m (9 kg-m, 65 ft-lb).

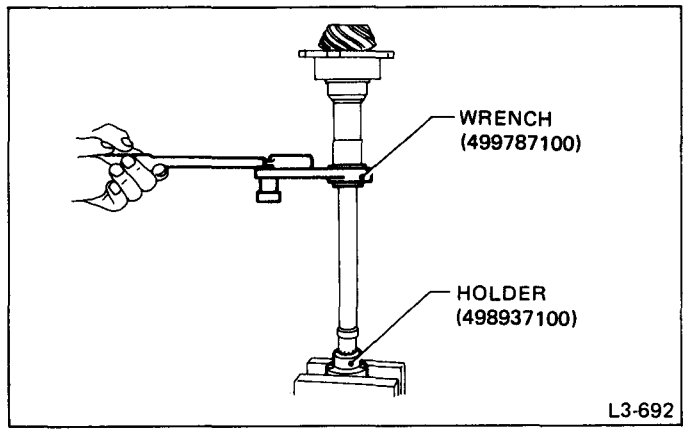

Fig. 191

5) Measure the starting torque of the bearing.
Make sure the starting torque is within the specified range. If out of the allowable range, replace the roller bearing.

Starting torque:
0.3 – 2.0 N·m (3 – 20 kg-cm, 2.6 – 16.4 in-lb)

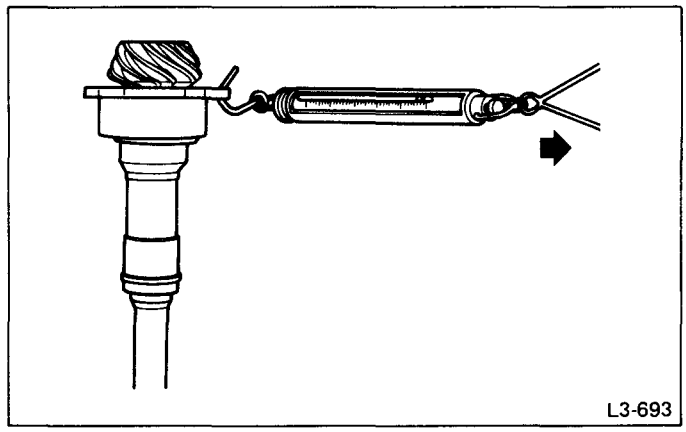

Fig. 192

6) Stake the lock nut securely at two places.
7) Measure dimension "B" of the drive pinion shaft.

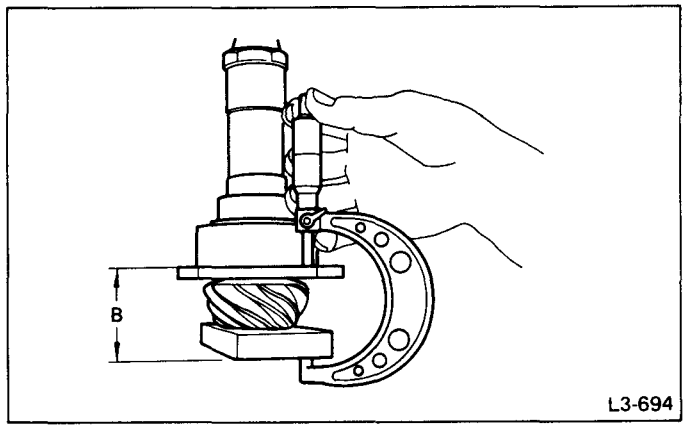

Fig. 193

8) Determine the thickness t (mm) of the drive pinion shim.

t = 6.5 ± 0.0125 – (B – A)

The number of shims must be three or less.

- **Available drive pinion shims**

Part No.	Thickness mm (in)
31451AA050	0.15 (0.0059)
31451AA060	0.175 (0.0069)
31451AA070	0.2 (0.0079)
31451AA080	0.225 (0.0089)
31451AA090	0.25 (0.0098)
31451AA100	0.275 (0.0108)

5. Reverse Clutch

DISASSEMBLY

1) Remove the snap ring, and take out the retaining plate, drive plates, driven plates, and dish plate.
2) Using the COMPRESSOR (398673600), INSTALLER (398177700) and PLIER (399893600), remove the snap ring and take out the spring retainer and springs.
3) Take out the piston by applying compressed air.

INSPECTION

1) Drive plate facing for wear and damage
2) Snap ring for wear, return spring for breakage or setting, and spring retainer for deformation
3) Lip seal and lathe cut seal ring for damage
4) Piston check ball for operation

ASSEMBLY

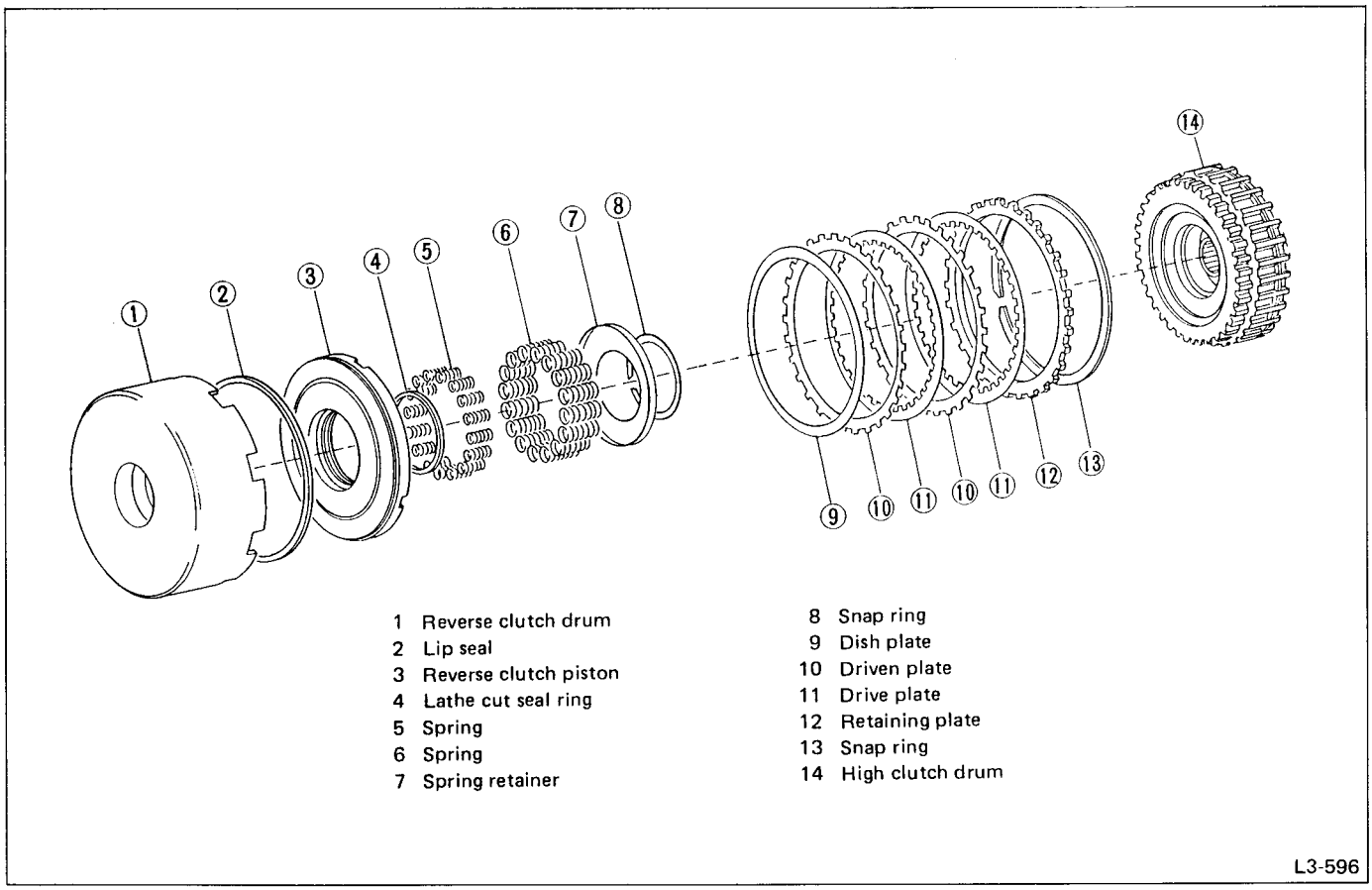

Fig. 194

1) Using the same special tools as those used in disassembling, assemble piston the return springs, spring retainer and snap ring.
2) Assemble the dish plate, driven plates, drive plates and retaining plate in that order and attach the snap ring.

Pay attention to the orientation of the dish plate.

3) Checking operation:
Apply compressed air intermittently to the oil hole, and check the reverse clutch for smooth operation.
4) Measuring clearance (Retaining plate selection).

Standard value:
0.5 – 0.8 mm (0.020 – 0.031 in)
Allowable limit: 1.2 mm (0.047 in)

Before measuring clearance, place the same thickness of shim on both sides to prevent retaining plate from tilting.

- **Available retaining plates**

Part No.	Thickness mm (in)
31567AA000	4.6 (0.181)
31567AA020	4.8 (0.189)
31567AA030	5.0 (0.197)
31567AA040	5.2 (0.205)
31567AA050	5.4 (0.213)

6. High Clutch

DISASSEMBLY

1) Remove the snap ring, and take out the retaining plate, drive plates, and driven plates.
2) Using the COMPRESSOR (398673600), INSTALLER (398177700), and PLIERS (399893600), remove the snap ring and take out the spring retainer CP.
3) Apply compressed air to the clutch drum to remove the piston.

INSPECTION

1) Drive plate facing for wear and damage
2) Snap ring for wear, return spring for setting and breakage, and spring retainer for deformation
3) Lathe cut rings (large) (small) for damage
4) Piston check ball for smooth operation

ASSEMBLY

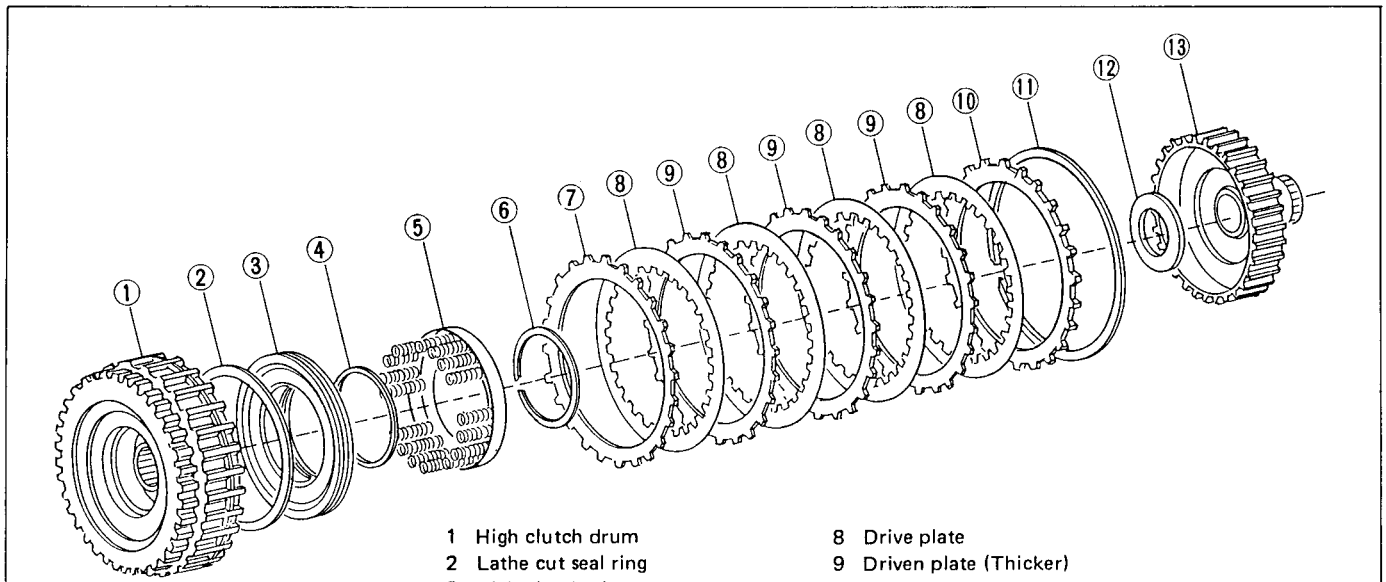

Fig. 195

1) Using the same special tools as those used in disassembling, assemble the piston, spring retainer CP, and snap ring.
2) Install the driven plate (thin), drive plates, driven plates, and retaining plate in that order. Then attach the snap ring.
3) Checking operation:
Apply compressed air intermittently to the oil hole, and check the high clutch for smooth operation.
4) Measuring clearance (Retaining plate selection).

Standard value:
1.8 – 2.2 mm (0.071 – 0.087 in)
Allowable limit: 2.6 mm (0.102 in)

Before measuring clearance, place the same thickness of shim on both sides to prevent retaining plate from tilting.

- **Available retaining plates**

Part No.	Thickness mm (in)
31567AA190	3.6 (0.142)
31567AA200	3.8 (0.150)
31567AA210	4.0 (0.157)
31567AA220	4.2 (0.165)
31567AA230	4.4 (0.173)
31567AA240	4.6 (0.181)
31567AA250	4.8 (0.189)
31567AA260	5.0 (0.197)

7. Forward Clutch Drum

DISASSEMBLY

1) Remove two snap rings from the forward clutch drum.

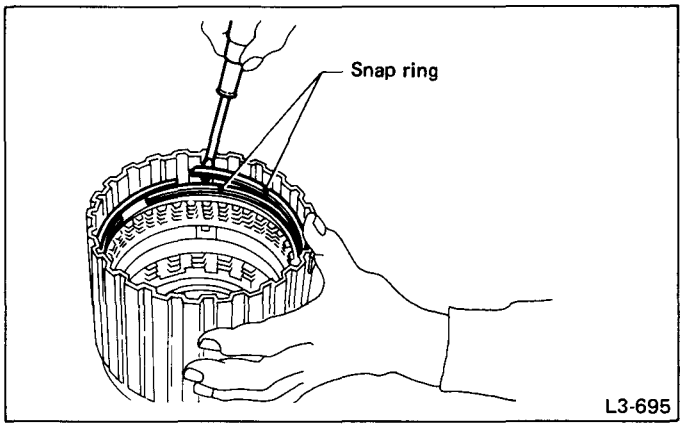

Fig. 196

2) Remove the retaining plate, drive plates, driven plates and dish plate. (Forward clutch)
3) Remove the snap ring from the forward clutch drum.

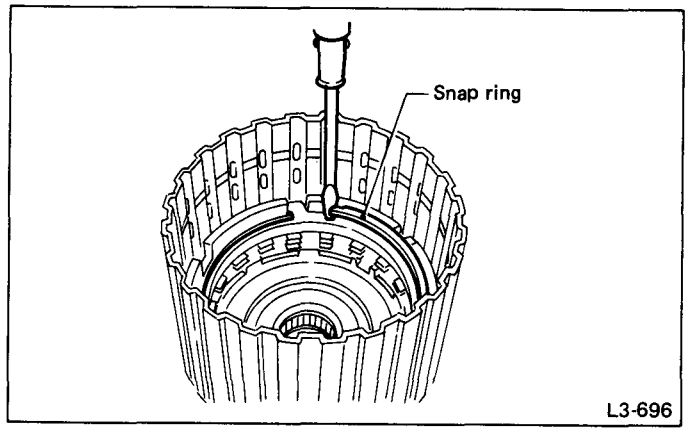

Fig. 197

4) Remove the retaining plate, drive plates, driven plates and dish plate. (Overrunning clutch)
5) Compress the spring retainer, and remove the snap ring from the forward clutch, by using SEAT (498627100) and COMPRESSOR (398673600).
6) Install the one-way clutch inner race to the forward clutch drum, and apply compressed air to remove the overrunning piston and forward piston.

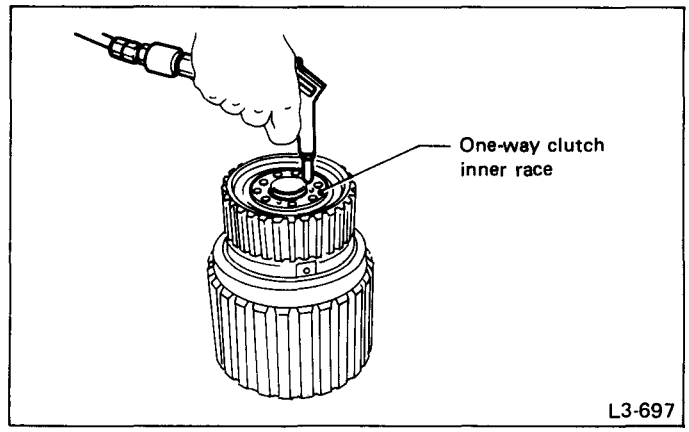

Fig. 198

7) Remove the one-way clutch after taking out the snap ring.
8) Remove the needle bearing after taking out the snap ring.

INSPECTION

1) Drive plate facing for wear and damage
2) Snap ring for wear, return spring for setting and breakage, and snap ring retainer for deformation
3) Lip seal and lathe cut ring for damage
4) Piston and drum check ball for operation

ASSEMBLY

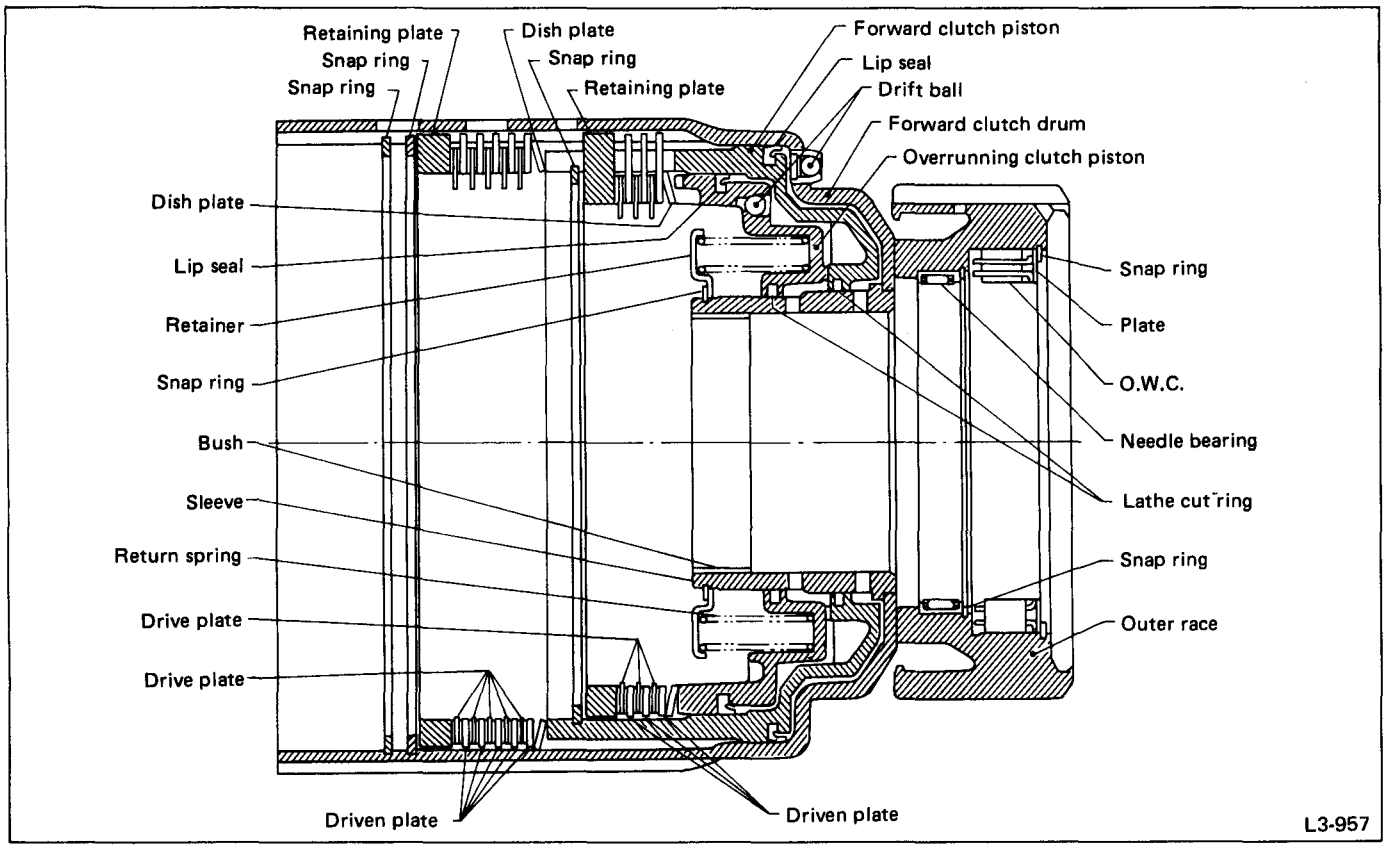

Fig. 199

1) Fit the forward piston and overrunning piston to the forward clutch drum.

Align the forward piston cut-out portion with the spline of the drum.

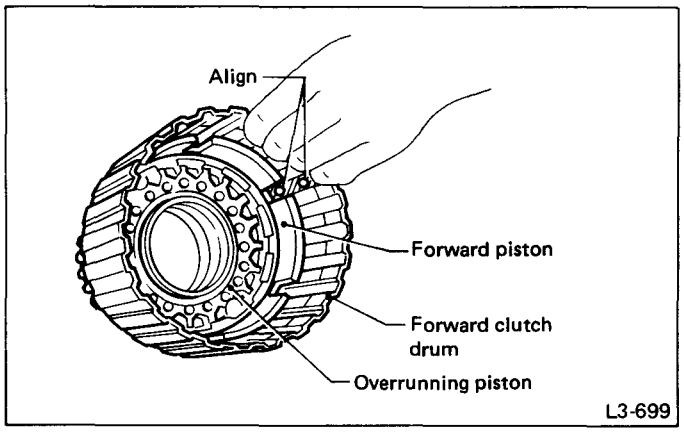

Fig. 200

2) Set the springs and retainer on the piston with a press and attach the snap ring.

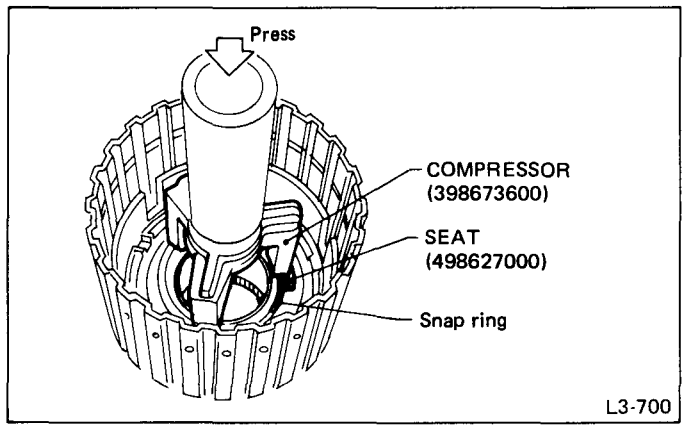

Fig. 201

3) Install the dish plate, driven plates, drive plates, and retaining plate, and secure with the snap ring. (Overrunning clutch)

Pay attention to the orientation of the dish plate.

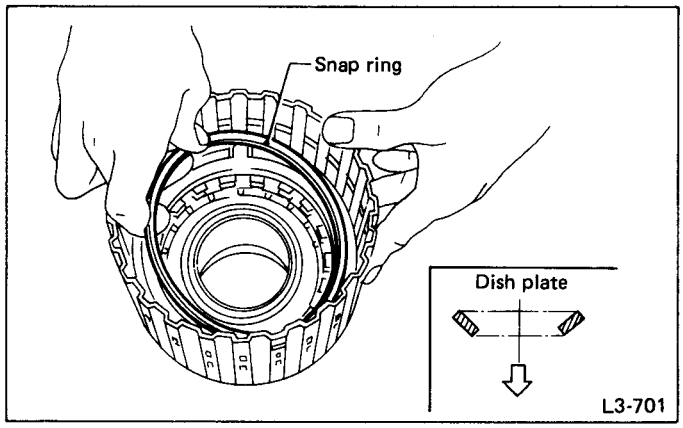

Fig. 202

4) Install the dish plates, driven plates, drive plates, and retaining plate, and secure with the snap ring. (Forward clutch)

Pay attention to the orientation of the dish plate.

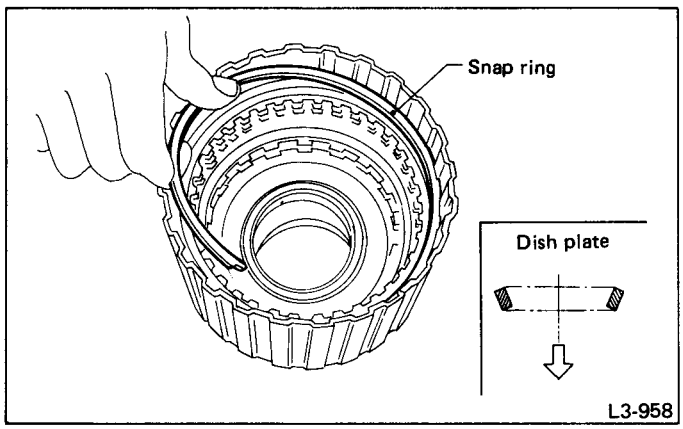

Fig. 203

5) Install the snap ring (for front planetary carrier).
6) Check the forward clutch and overrunning clutch for operation.
Set the one-way clutch inner race, and apply compressed air for checking.
7) Checking clearance:

	Standard value mm (in)	Allowable limit mm (in)
Forward clutch	0.45 – 0.85 (0.0177 – 0.0335)	1.6 (0.063)
Overrunning clutch	1.0 – 1.4 (0.039 – 0.055)	2.0 (0.079)

Before measuring clearance, place the same thickness of shim on both sides to prevent retaining plate from tilting.

If the clearance is out of the specified range, select a proper retaining plate so that the standard clearance can be obtained.

(Forward clutch)

Part No.	Thickness mm (in)
31567AA010	8.0 (0.315)
31567AA060	8.2 (0.323)
31567AA070	8.4 (0.331)
31567AA080	8.6 (0.339)
31567AA090	8.8 (0.346)
31567AA100	9.0 (0.354)

(Overrunning clutch)

Part No.	Thickness mm (in)
31567AA120	8.0 (0.315)
31567AA130	8.2 (0.323)
31567AA140	8.4 (0.331)
31567AA150	8.6 (0.339)
31567AA160	8.8 (0.346)
31567AA170	9.0 (0.354)
31567AA180	9.2 (0.362)

8) Install the needle bearing, and secure with the snap ring.

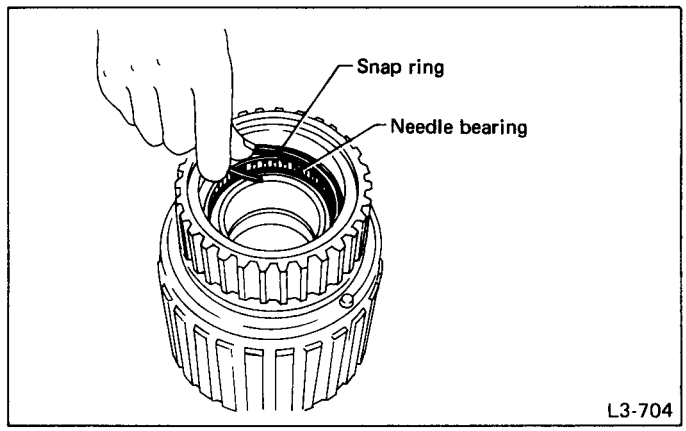

Fig. 204

9) Install the one-way clutch (1-2) and plate, and secure with the snap ring.

Set the inner race. Make sure that the forward clutch is free in the clockwise direction and locked in the counterclockwise direction, as viewed from the front of the vehicle.

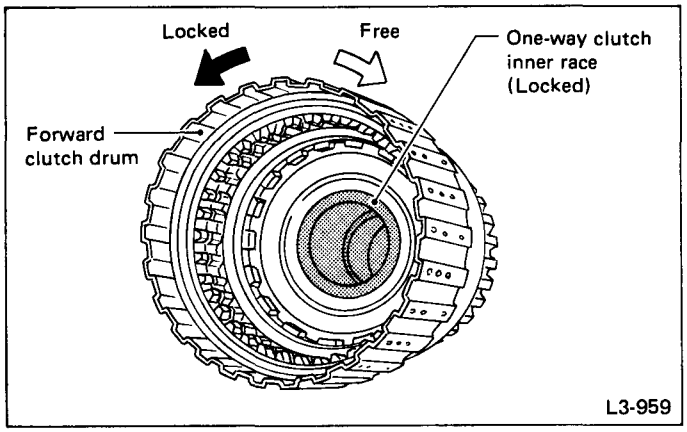

Fig. 205

8. One-Way Clutch Outer Race

DISASSEMBLY

Remove the snap ring. Then remove the one-way clutch (3-4).

INSPECTION

Check the sliding surface and one-way clutch (3-4) for any harmful cuts, damage, or other faults.

ASSEMBLY

Assemble the one-way clutch (3-4), and secure with the snap ring.

Pay attention to the orientation of the one-way clutch (3-4).

Confirm:
Assemble the rear internal gear, and secure the outer race. Make sure that the internal gear is locked in the clockwise direction, and free to rotate in the counterclockwise direction.

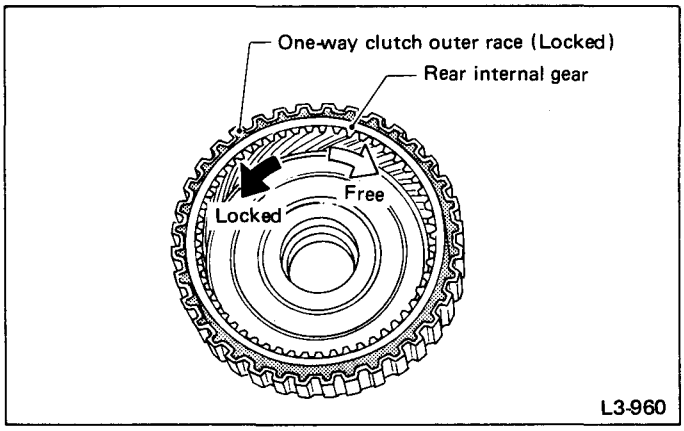

Fig. 206

9. Servo Piston

DISASSEMBLY

1) Remove the spring.
2) Remove the band servo piston (3-4).
3) While compressing the retainer from above, remove the snap ring. Then remove the retainer, spring and stem.
4) Take out the band servo piston (1-2).

INSPECTION

1) Check each component for harmful cuts, damage, or other faults.
2) Check the O-ring and lathe cut ring for damage.

ASSEMBLY

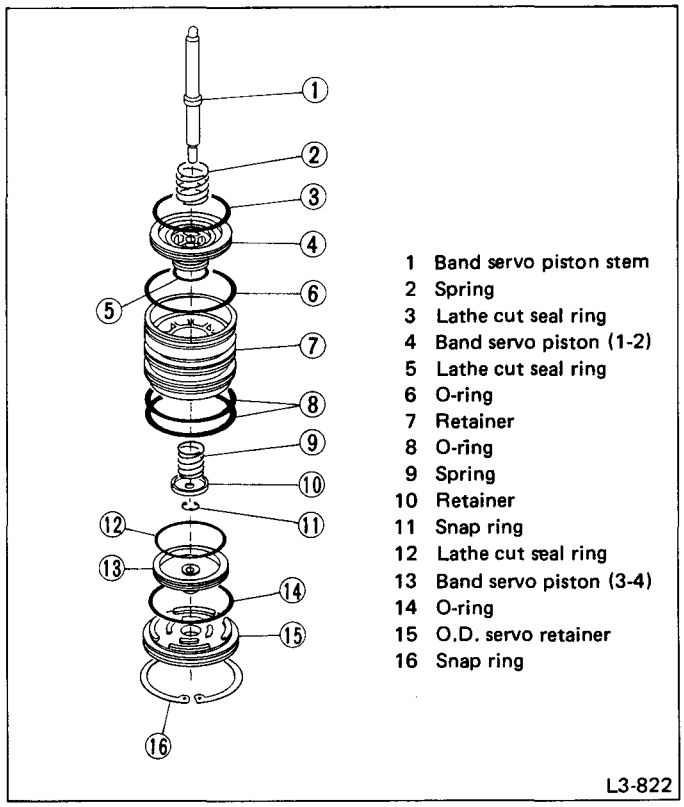

Fig. 207

1) Install the band servo piston (1-2) to the retainer, and insert the stem.
2) Put the spring and retainer on the piston. Fit the snap ring securely while compressing the spring.
3) Install the band servo piston (3-4).
4) Install the spring securely to the band servo piston (1-2).

a. Many different O-rings and lathe cut rings are used. Be careful not to confuse them when installing.
b. Be careful not to damage O-rings and lathe cut rings.

10. Differential Case Assembly

DISASSEMBLY

1) Using a press, remove the taper roller bearing.

Be careful not to damage the speedometer drive gear.

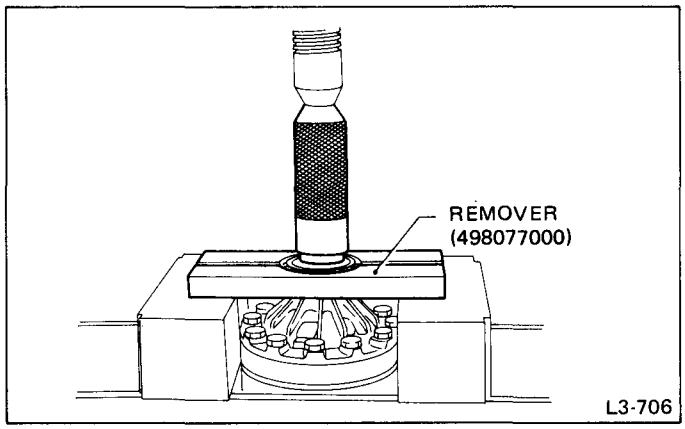

Fig. 208

2) Secure the case in a vise and remove the crown gear tightening bolts, then separate the crown gear, case (RH) and case (LH).

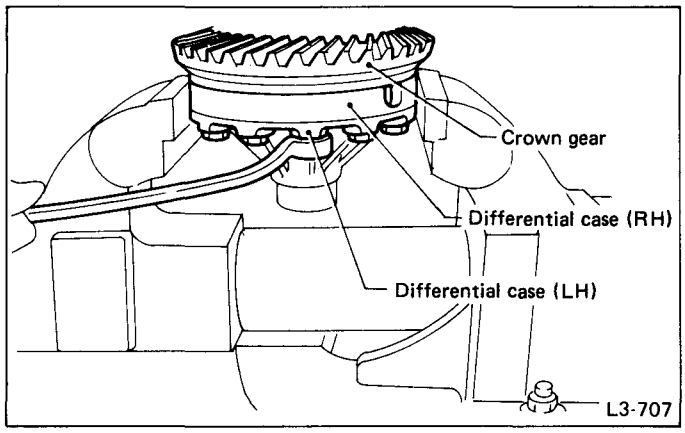

Fig. 209

3) Pull out the straight pin and shaft, and remove the differential bevel gear, washer, and differential bevel pinion.

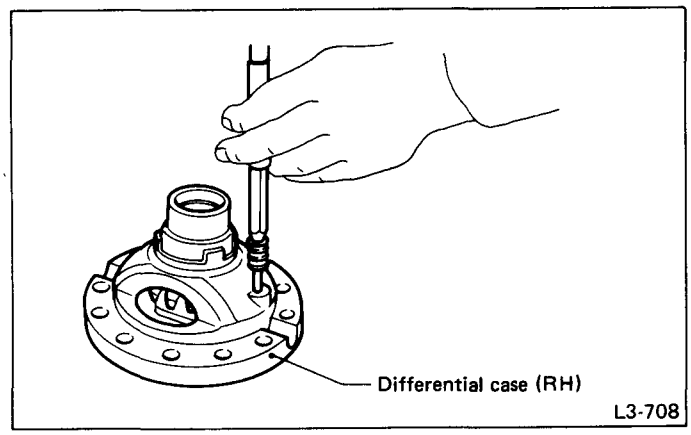

Fig. 210

INSPECTION

Check each component for harmful cuts, damage, and other faults.

ASSEMBLY

1) Install the washer, differential bevel gear, and differential bevel pinion in the differential case (RH). Insert the pinion shaft, and fit the straight pin.

Make sure that the case (RH) is staked in order to lock the straight pin.

2) Install the washer and differential bevel gear to the differential case (LH). Then put the case over the differential case (RH), and connect both cases.

3) Install the crown gear and secure by tightening the bolt.

Standard tightening torque:
57 – 67 N·m (5.8 – 6.8 kg-m, 42 – 49 ft-lb)

4) Measurement of backlash (Selection of washer).
Measure the gear backlash by inserting a dial gauge through the access window of the case.

Standard value:
0.13 – 0.18 mm (0.0051 – 0.0071 in)

Measure the backlash by applying a pinion tooth between two bevel gear teeth.

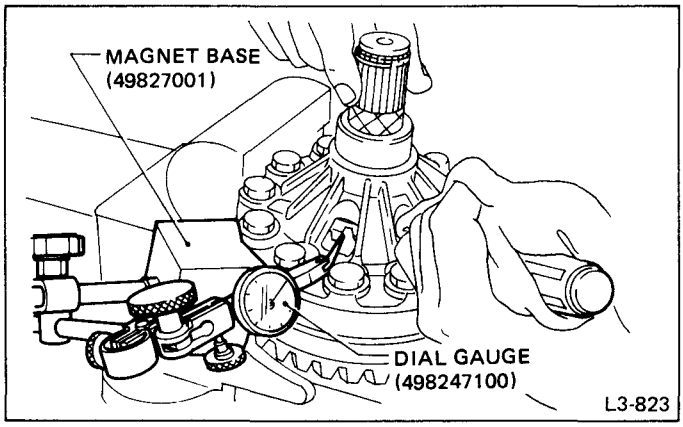

Fig. 211

5) Install the speedometer drive gear. Then force-fit the taper roller bearing with a press.

Be sure to position correctly the locking end of the speedometer drive gear.

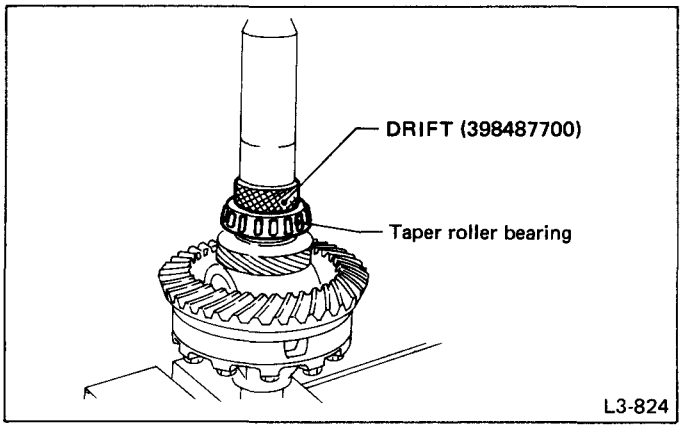

Fig. 212

11. Transfer Clutch

DISASSEMBLY

1) Remove the seal ring.

Be careful not to damage the seal ring.

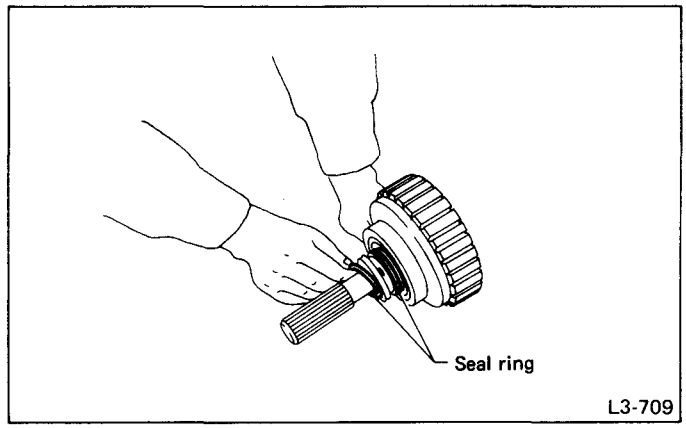

Fig. 213

2) Using a press, remove the ball bearing.

Do not reuse the bearing.

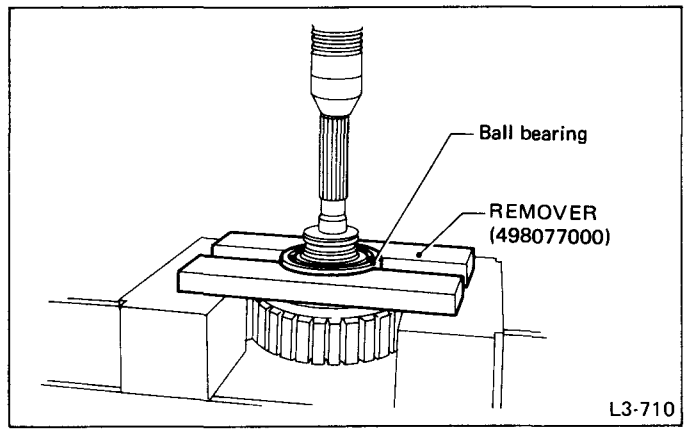

Fig. 214

3) Remove the snap ring, and take out the pressure plate, drive plates, and driven plates.

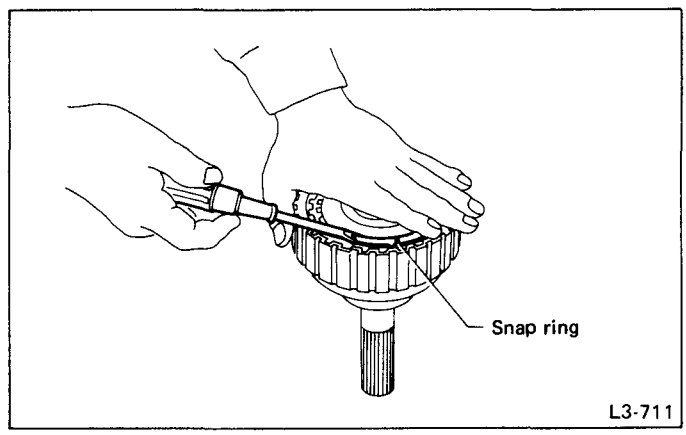

Fig. 215

4) Remove the snap ring, and take out the spring retainer CP.

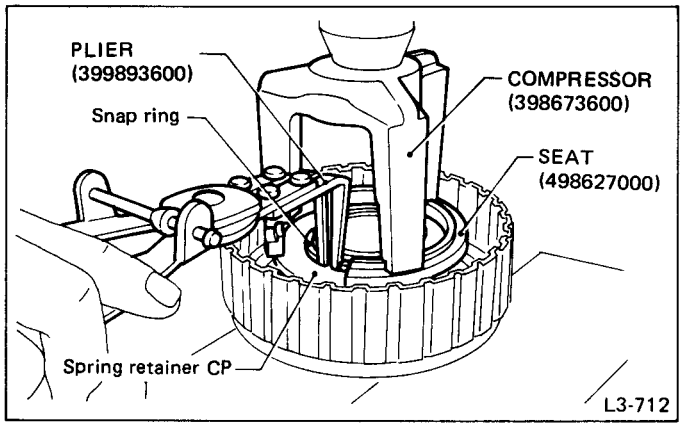

Fig. 216

5) Apply compressed air to the rear drive shaft to remove the piston.

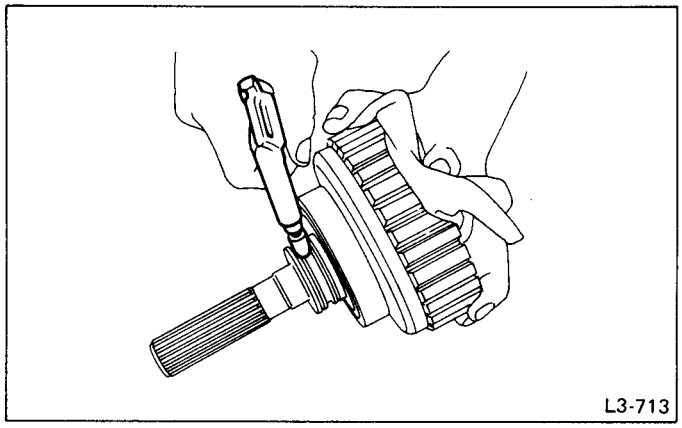

Fig. 217

INSPECTION

1) Check the drive plate facing for wear and damage.
2) Check the snap ring for wear, return spring for permanent set and breakage, and spring retainer for deformation.
3) Check the lathe cut ring for damage.

ASSEMBLY

1) Install the lathe cut seal ring to the I.D./O.D. of the transfer clutch piston.
2) Install the piston and spring retainer, and secure with a snap ring.

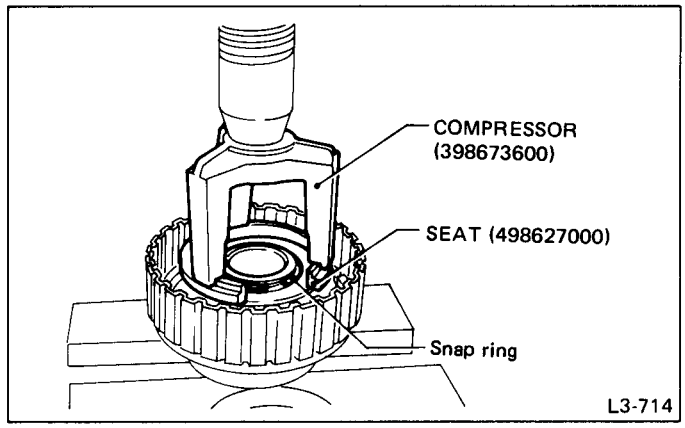

Fig. 218

3) Install the driven plates, drive plates, and pressure plate, and secure with a snap ring.
4) Apply compressed air to see if the assembled parts move smoothly.

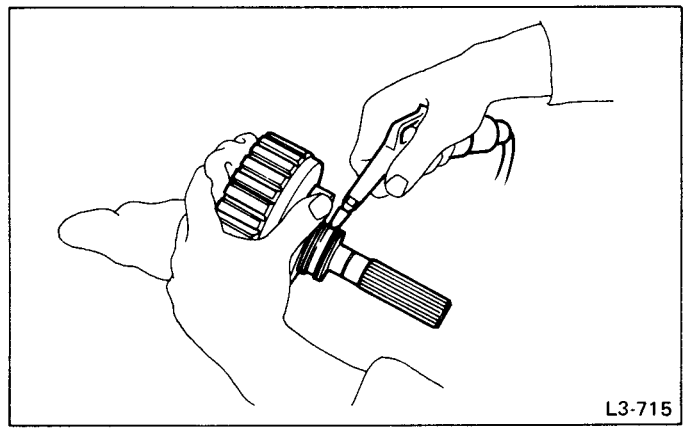

Fig. 219

5) Check the clearance:

Standard value:
0.2 – 0.9 mm (0.008 – 0.035 in)
Allowable limit: 1.6 mm (0.063 in)

If the clearance is not within the specified range, select a proper pressure plate.

Before measuring clearance, place the same thickness of shim on both sides to prevent pressure plate from tilting.

- **Available pressure plates**

Part No.	Thickness mm (in)
31593AA150	3.3 (0.130)
31593AA160	3.7 (0.146)
31593AA170	4.1 (0.161)
31593AA180	4.5 (0.177)

6) Press-fit the ball bearing.

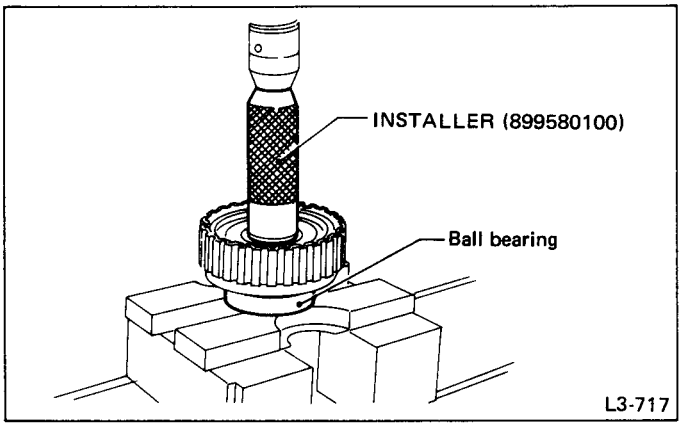

Fig. 220

7) Coat the seal ring with vaseline, and install it in the seal ring groove of the shaft.

Do not expand the seal ring excessively when installing.

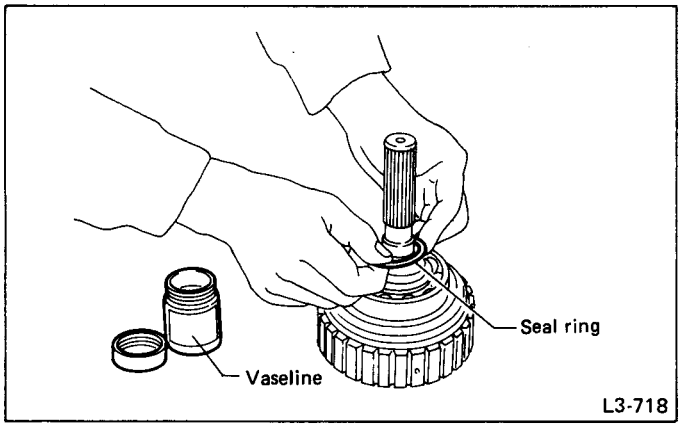

Fig. 221

12. Transfer Valve Body

DISASSEMBLY

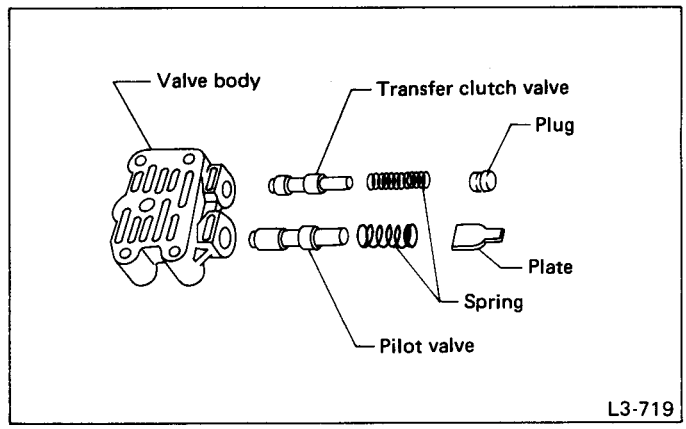

Fig. 222

1) Remove the plate. Then remove the spring and pilot valve together.
2) Remove the straight pin and pry out the plug with a screwdriver. Then extract the spring and transfer clutch valve together.

Be careful not to damage the valve and valve body.

INSPECTION

Check each component for harmful cuts, damage, or other faults.

ASSEMBLY

To assemble, reverse the removal sequence.

Make sure the valve slides smoothly after assembling.

4 Assembly of Overall Transmission

1. CONVERTER CASE SECTION

1) Check the appearance of each component and clean.

Make sure each part is free of harmful cuts, damage, and other faults.

2) Install the washer and snap ring to the speedometer shaft, and set the oil seal. Then force-fit the shaft to the converter case.

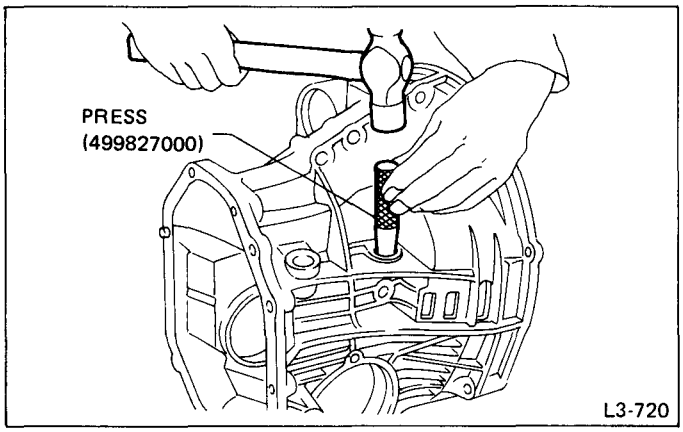

Fig. 223

3) Install the speedometer driven gear to the speedometer shaft, and secure with a snap ring.

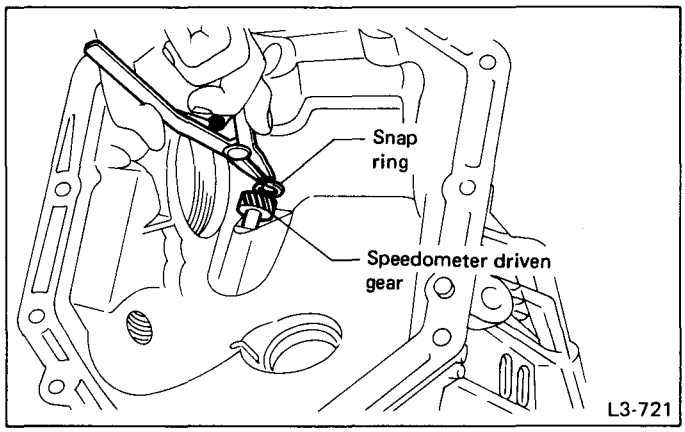

Fig. 224

4) Force-fit the oil seal to the converter case.

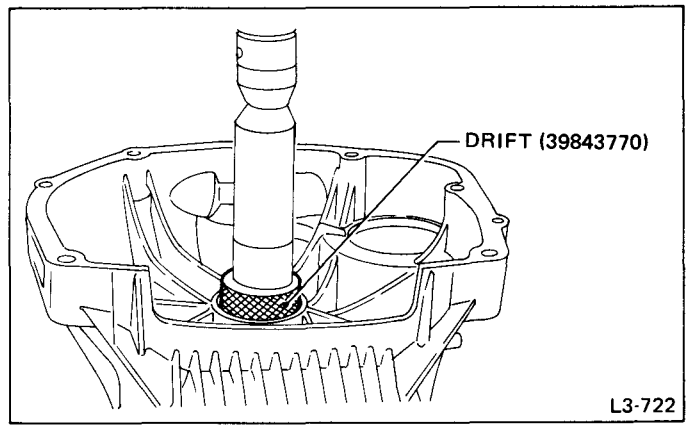

Fig. 225

5) Install the differential ASSY to the case, paying special attention not to damage the speedometer gears (drive and driven) and the inside of the case (particularly, the differential side retainer contact surface).

6) Install the snap ring to the axle shaft, insert the shaft into the differential assembly, and tap it into position with a plastic hammer.

Thrust play:
Approx. 0.3 mm – 0.5 mm (0.012 – 0.020 in)

a. If no play is felt, check whether the shaft is fully inserted. If shaft insertion is correct, replace the axle shaft.
b. Be sure to use a new snap ring.

7) Wrap vinyl tape around the splined portion of the axle shaft.

8) Install the oil seal and outer race (taper roller bearing) to the differential side retainer. Then screw in the retainer after coating the threads with oil.

a. Pay attention not to damage the oil seal lips.
b. Do not confuse the RH and LH oil seals.
c. Keep the O-ring removed from the retainer.

9) Using the HANDLE (499787000), screw in the retainer until light contact is felt.

Screw in the RH side slightly deeper than the LH side.

10) Hypoid gear backlash adjustment and tooth contact check
(1) Assemble the drive pinion assembly to the oil pump housing.

a. Be careful not to bend the shims.
b. Be careful not to force the pinion against the housing bore.

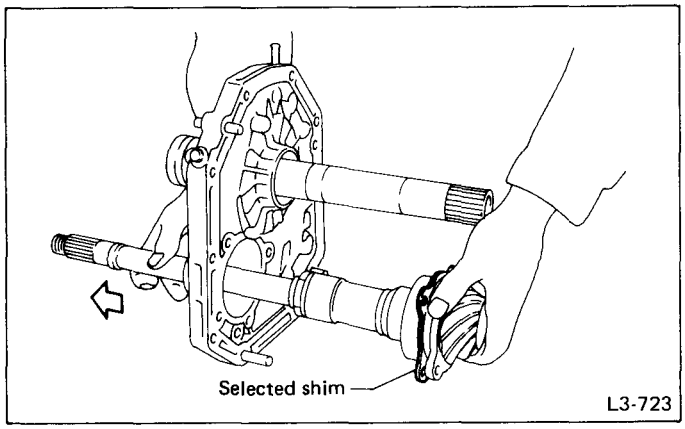

Fig. 226

(2) Tighten four bolts to secure the roller bearing.

Tightening torque:
39 ± 3 N·m (4.0 ± 0.3 kg-m, 28.9 ± 2.2 ft-lb)

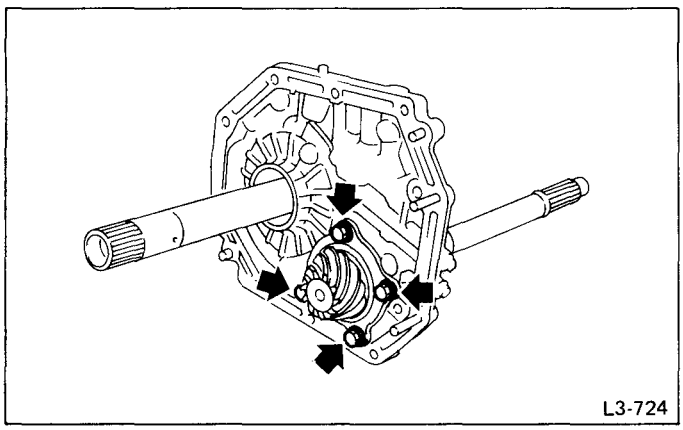

Fig. 227

(3) Install the oil pump housing assembly to the converter case, and secure evenly by tightening four bolts.

Tightening torque:
33 ± 3 N·m (3.4 ± 0.3 kg-m, 24.6 ± 2.2 ft-lb)

a. Thoroughly remove the liquid gasket from the case mating surface beforehand.
b. Use an old gasket or an aluminium washer so as not to damage the mating surface of the housing.

(4) Rotate the drive pinion several times.

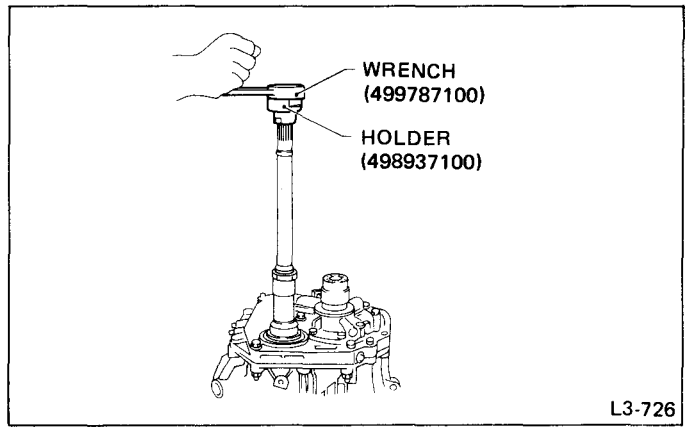

Fig. 228

(5) Tighten the LH retainer until contact is felt while rotating the shaft. Then loosen the RH retainer. Keep tightening the LH retainer and loosening the RH retainer until the pinion shaft can no longer be turned. This is the "zero" state.
(6) After the "zero" state is established, back off the LH retainer 3 notches and secure it with the locking tab. Then back off the RH retainer and retighten until it stops. Repeat this procedure several times. Tighten the RH retainer 1 3/4 notches further. This sets the preload. Finally, secure the retainer with its locking tab.

Turning the retainer by one tooth changes the backlash about 0.05 mm (0.0020 in).

(7) Turn the drive pinion several rotations and check to see if the backlash is within the standard value.

Backlash:
0.13 – 0.18 mm (0.0051 – 0.0071 in)

After confirming that the backlash is correct, check the tooth contact.

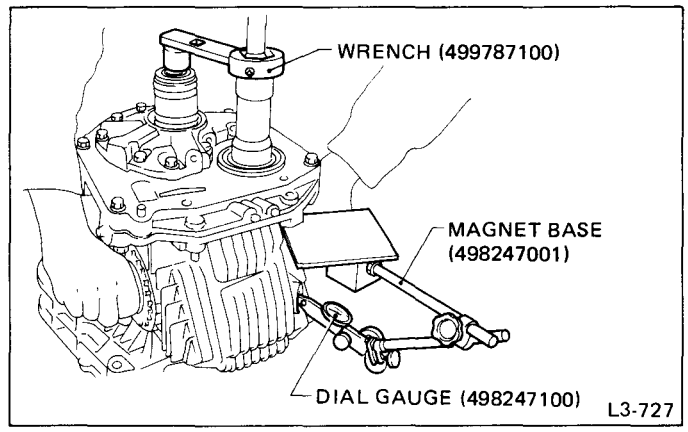

Fig. 229

(8) Apply red lead evenly to the surfaces of three or four teeth of the crown gear. Rotate the drive pinion in the forward and reverse directions several times. Then remove the oil pump housing, and check the tooth contact pattern.
If tooth contact is improper, readjust the backlash or shim thickness.

Checking item	Contact pattern	Corrective action
Correct tooth contact Tooth contact pattern slightly shifted toward toe under no-load rotation. (When loaded, contact pattern moves toward heel.)	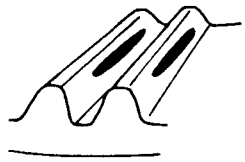	
Face contact Backlash is too large.	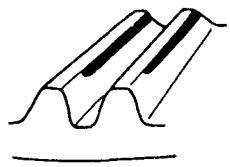 This may cause noise and chipping at tooth ends.	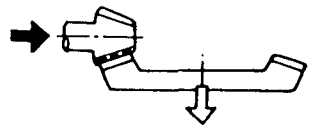 Increase thickness of drive pinion hight adjusting shim in order to bring drive pinion close to crown gear.
Flank contact Backlash is too small.	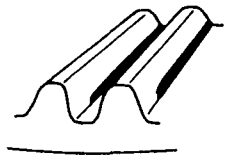 This may cause noise and stepped wear on surfaces.	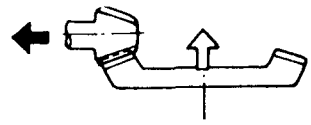 Reduce thickness of drive pinion hight adjusting shim in order to move drive pinion away from crown gear.
Toe contact (Inside end contact)	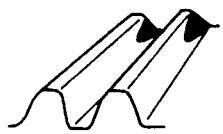 Contact area is small. This may cause chipping at toe ends.	Adjust as for flank contact. 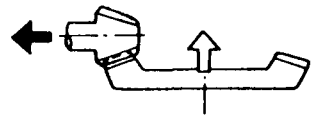
Heel contact (Outside end contact)	Contact area is small. This may cause chipping at heel ends. 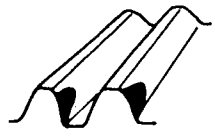	Adjust as for face contact. 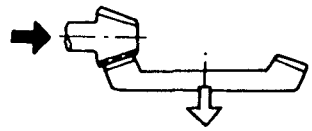

Fig. 230 A13-164

(9) If tooth contact is correct, mark the retainer position and loosen it. After fitting the O-ring, screw in the retainer to the marked position. Then tighten the lock plate to the specified torque.

Tightening torque:
23 – 26 N·m (2.3 – 2.7 kg-m, 17 – 20 ft-lb)

11) Install the seal pipe to the converter case.

Be sure to use a new seal pipe.

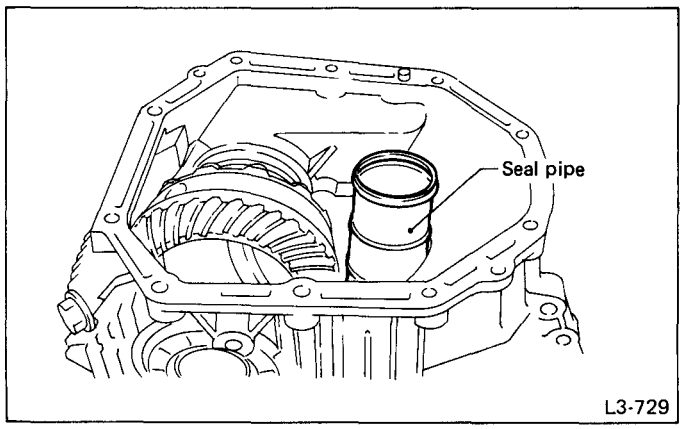

Fig. 231

12) Install two oil seals to the oil seal retainer with INSTALLER (499247300).

a. Pay attention to the orientation of the oil seals.
b. Be careful not to damage the seal lips. If any damage is found, replace with a new one.

13) Attach the O-ring to the oil seal retainer with vaseline. Install the seal to the oil pump housing bore.

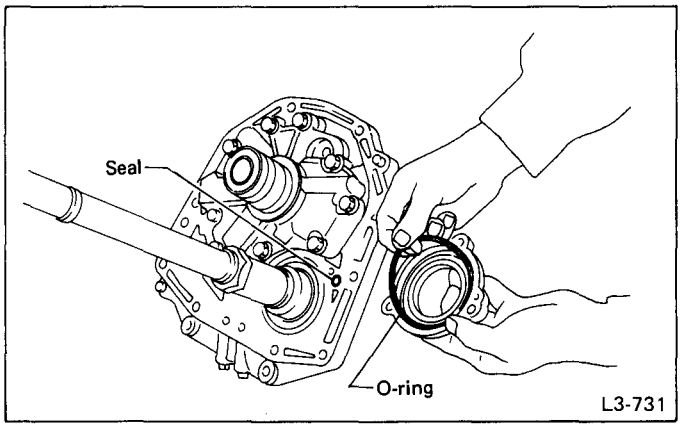

Fig. 232

14) Install the oil seal retainer taking care not to damage the oil seal lips. Then secure with three bolts.

Make sure the O-ring is fitted correctly in position.

Tightening torque:
7 ± 1 N·m (0.7 ± 0.1 kg-m, 5.1 ± 0.7 ft-lb)

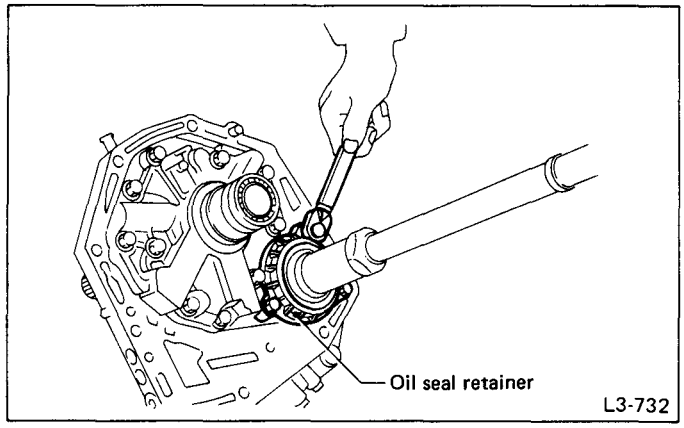

Fig. 233

15) Apply vaseline to the groove on the oil pump cover, and install two (R) seal rings and two (H) seal rings.

a. Fit the seal ring after compressing, and rub vaseline into the seal ring to avoid expansion.
b. The "R" seal ring has a large diameter, while "H" has small diameter.

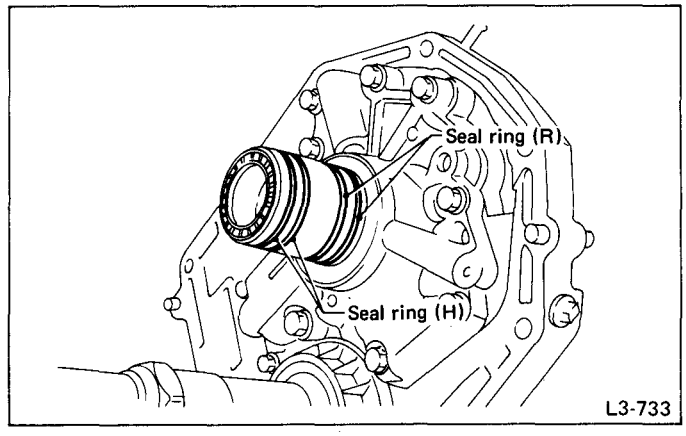

Fig. 234

16) Install the rubber seal to the converter case.

Be careful not to lose the rubber seal.

2. TRANSMISSION CASE

1) Press-fit the roller bearing to the transmission case.

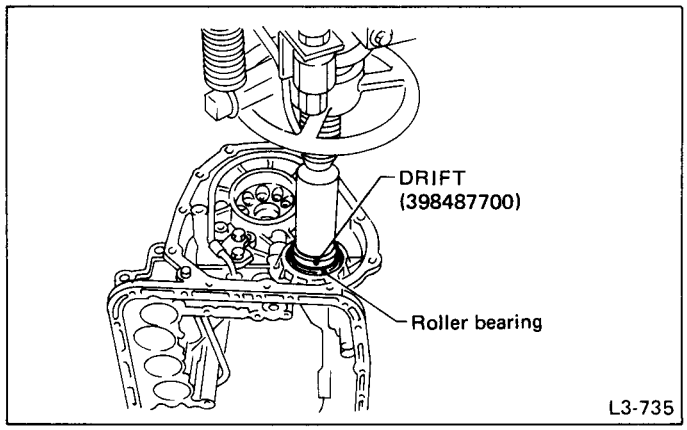

Fig. 235

2) Using a plastic hammer, force-fit the oil seal.

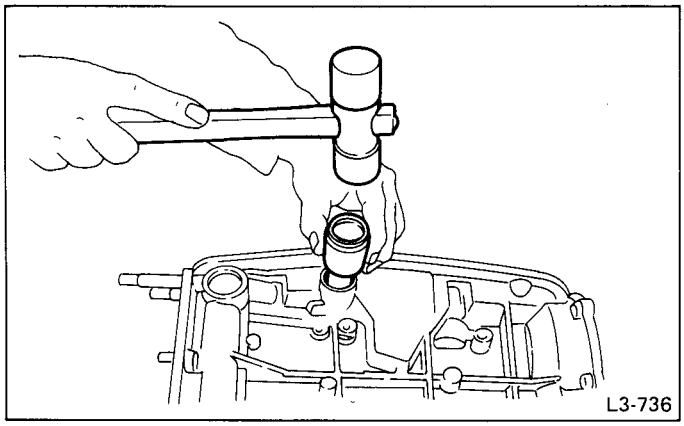

Fig. 236

3) Install the manual plate and shaft, and secure with a spring pin.

a. Be careful not to damage the oil seal lip.
b. After installation, make sure of smooth movement.

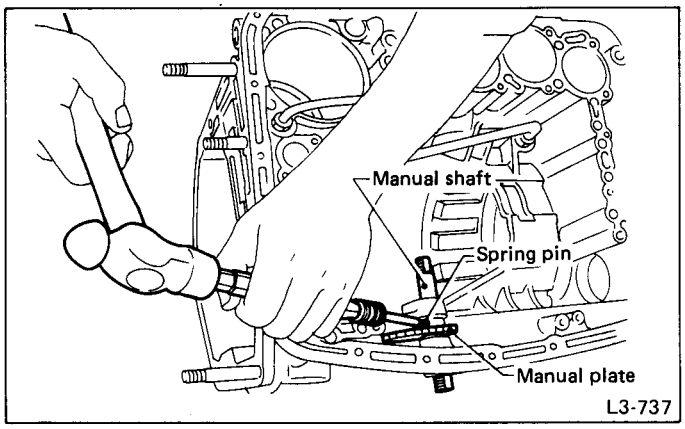

Fig. 237

4) Assemble the manual lever and parking rod to the inside shaft, and secure with a nut.

Tightening torque:
39 ± 3 N·m (4.0 ± 0.3 kg-m, 28.9 ± 2.2 ft-lb)

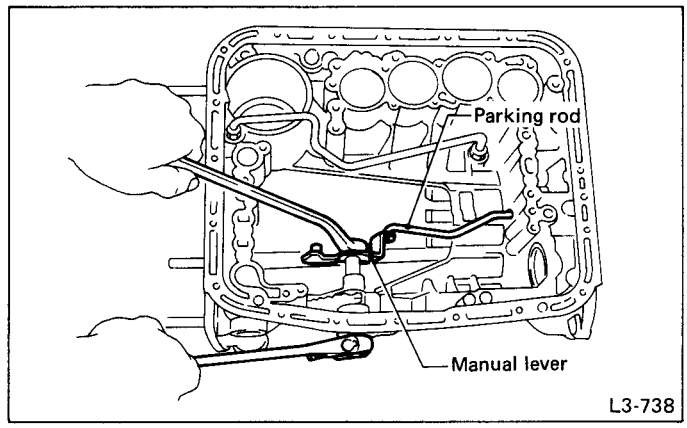

Fig. 238

5) Install the detent manual spring.

Position the spring so that its center is aligned with the center of the manual plate.

Tightening torque:
6 ± 1 N·m (0.6 ± 0.1 kg-m, 4.3 ± 0.7 ft-lb)

6) Install the lathe cut seal ring and lip seal to the I.D./O.D. of the low & reverse piston. Then install the piston into the case with a press.

a. Be careful not to tilt the piston when installing.
b. Be careful not to damage the lip seal.

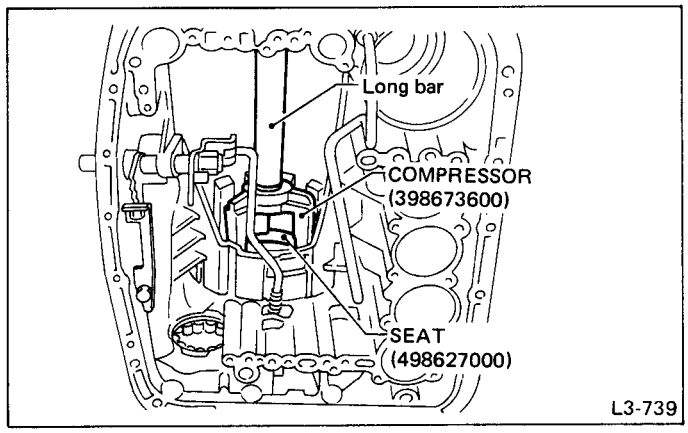

Fig. 239

7) Install the one-way clutch inner race.
(1) Using a press, install the thrust needle bearing to the inner race.

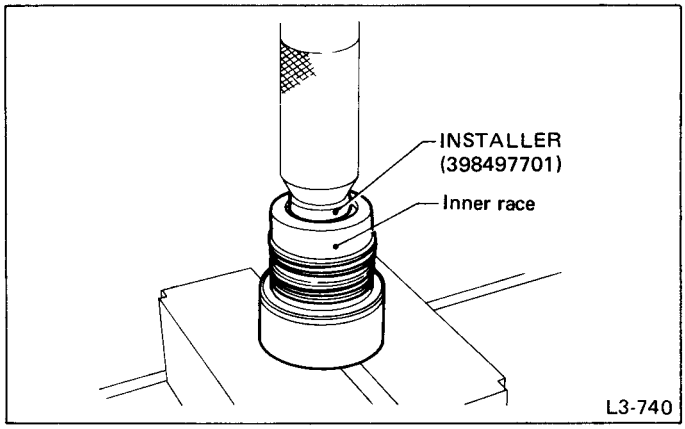

Fig. 240

Use the PULLER ASSY (398527700) when removing.

(2) Install four seal rings.

Apply vaseline to the groove of the inner race and to the seal ring after installation, so that the seal ring will not expand.

(3) Place the spring retainer CP on the inner race. Install the spring to the recessed portion of the piston. Then tighten eight socket head bolts from the rear side of the transmission case.

Tightening torque:
25 ± 2 N·m (2.5 ± 0.2 kg-m, 18.1 ± 1.4 ft-lb)

Be sure to tighten evenly.

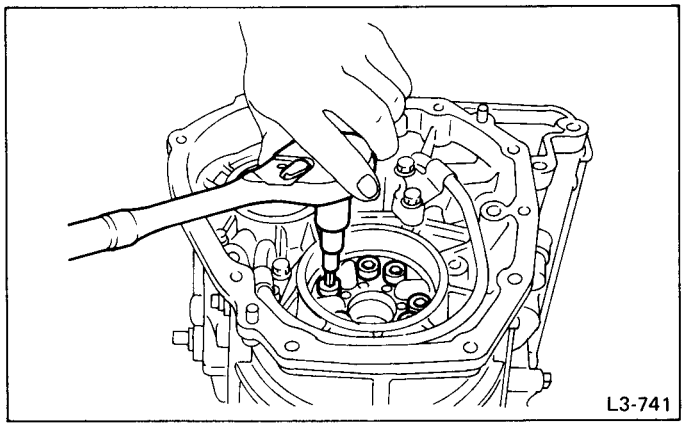

Fig. 241

8) Install the band servo sub ASSY.
9) Press the O.D. servo retainer into position, and secure with a snap ring.

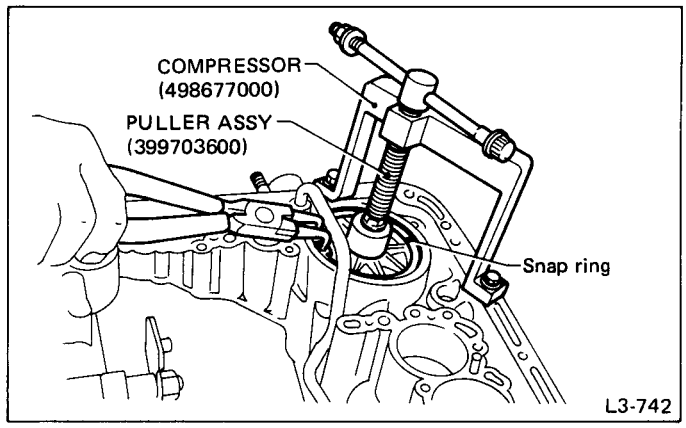

Fig. 242

*** Perform the following operations with the transmission case set vertically on wooden blocks.**

10) Installation of the low & reverse brake:

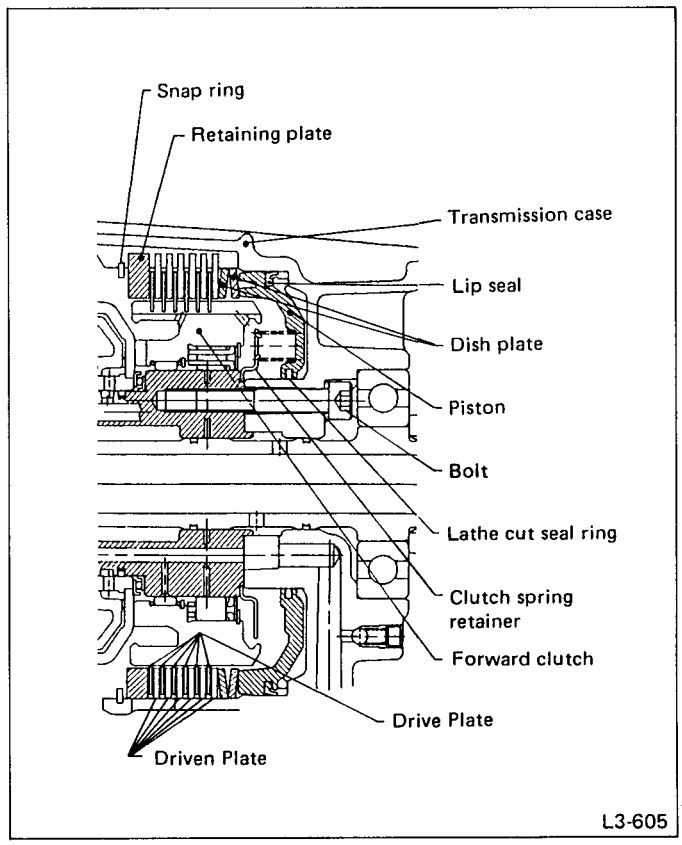

Fig. 243

(1) Install two dish plates, driven plates, drive plates, and a retaining plate, and secure with a snap ring.

a. Pay attention to the orientation of the dish plate.
b. Driven plate } 1800 : 4
Drive plate } 2700 : 6
c. Dish plate 1800 : 2
2700 : 1

(2) Apply compressed air intermittently to check for operation.

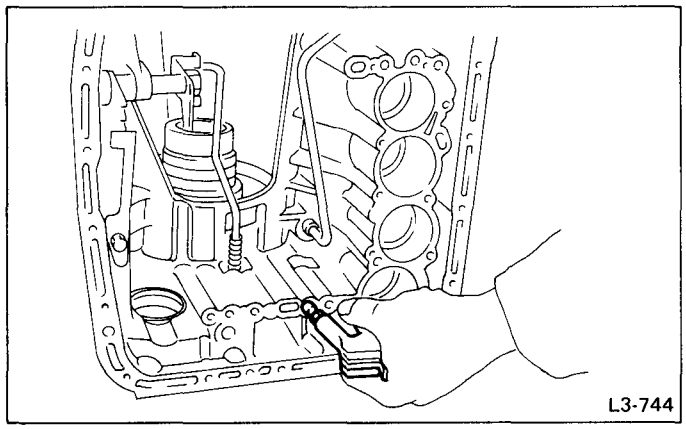

Fig. 244

(3) Check the clearance (Selection of retaining plate)

Standard value:
1.1 – 1.7 mm (0.043 – 0.067 in)
Allowable limit: 2.7 mm (0.106 in)

Before measuring clearance, place the same thickness of shim on both sides to prevent retaining plate from tilting.

- **Available retaining plates**

Part No.	Thickness mm (in)
31667AA180	6.5 (0.256)
31667AA190	6.8 (0.268)
31667AA200	7.1 (0.280)
31667AA210	7.4 (0.291)
31667AA220	7.7 (0.303)
31667AA230	8.0 (0.315)
31667AA240	8.2 (0.323)
31667AA250	8.4 (0.331)

11) Install the thrust needle bearing to the inner race.

Refer to 3 "Location and installing direction of thrust needle bearing and washer" for the orientation of the bearing. Carefully check the orientation of all parts indicated by an asterisk * in the following pages.)

12) Install the forward clutch drum ASSY.
(1) Install carefully while rotating the drum slowly paying special attention not to damage the seal ring.
(2) Installation is complete when the drum recedes 2.5 mm (0.098 in) from the inner race surface.

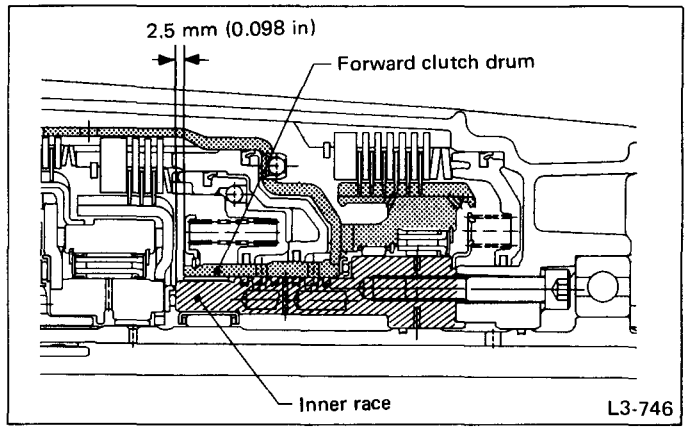

Fig. 245

13) Assemble the overrunning clutch hub.

a. Join the thrust needle bearing* and thrust washer with vaseline, and then install them together.
b. Make sure that the splines are engaged correctly.

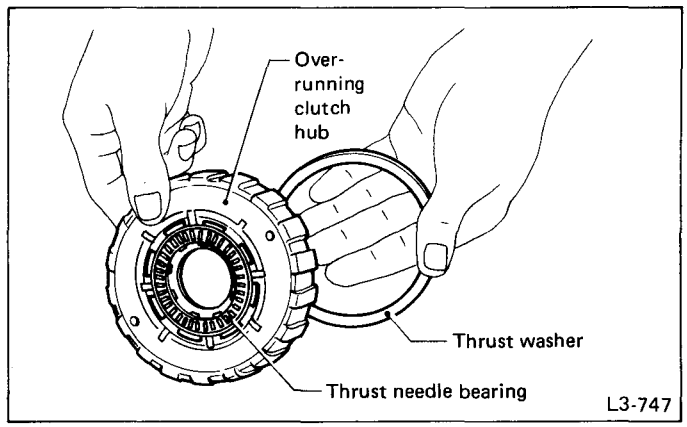

Fig. 246

14) Install the one-way clutch outer race ASSY.

Make sure the forward clutch splines are engaged correctly.

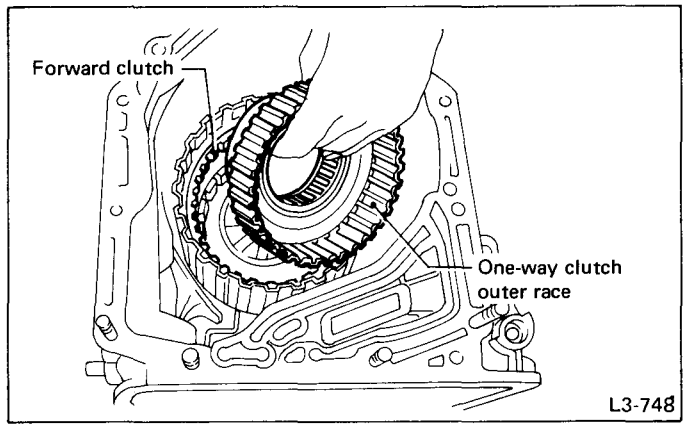

Fig. 247

15) Assemble the rear internal gear.
(1) Join the thrust needle bearing* and thrust washer to the gear with vaseline, and install the gear while rotating it.
(2) Securely engage the bearing with the dog of the overrunning clutch hub.

Installation is complete when the snap ring top surface of the forward clutch drum recedes approximately 3.5 mm (0.138 in).

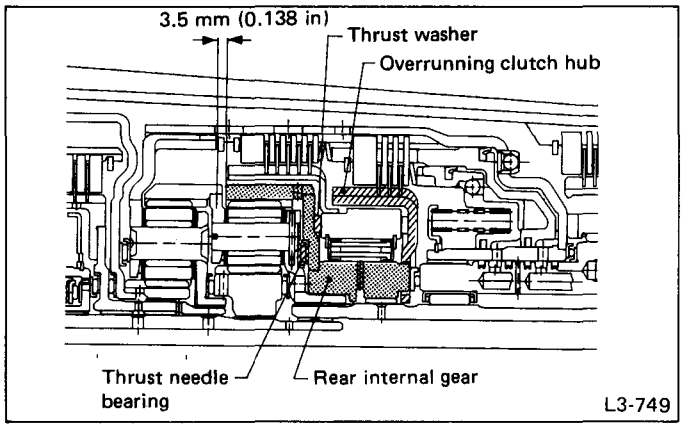

Fig. 248

16) Install the rear planetary carrier.
Attach the thrust needle bearing* to the inside of the carrier with vaseline. Then install the carrier while rotating slowly.

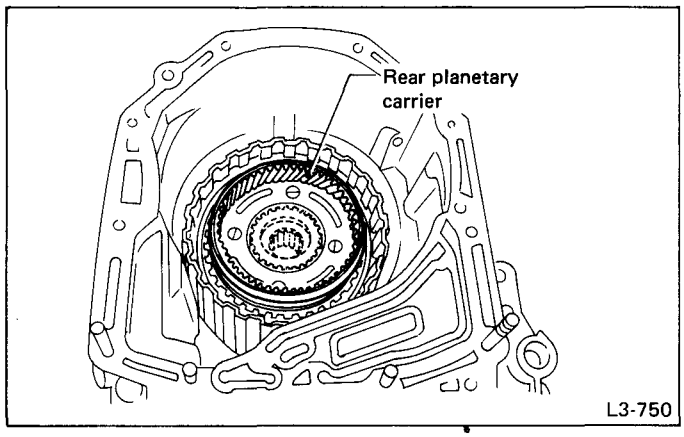

Fig. 249

17) Install the rear sun gear.

Install the gear with the oil hole facing up.

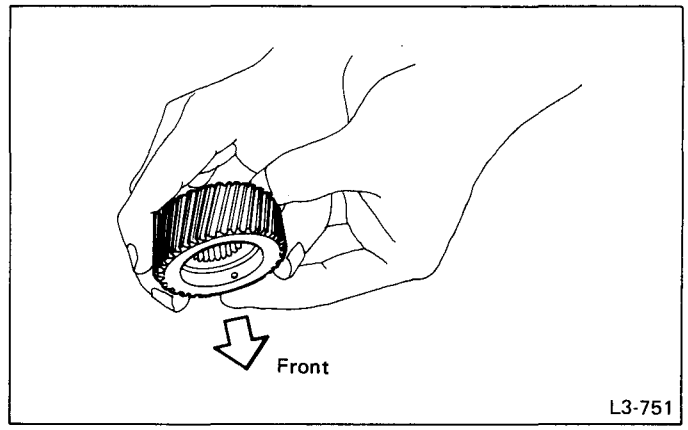

Fig. 250

18) Install the front planetary carrier.
Attach the thrust needle bearings* to both sides of the carrier with vaseline. Install the carrier carefully, while aligning with the splines of the forward clutch drum, and while rotating the pinion.

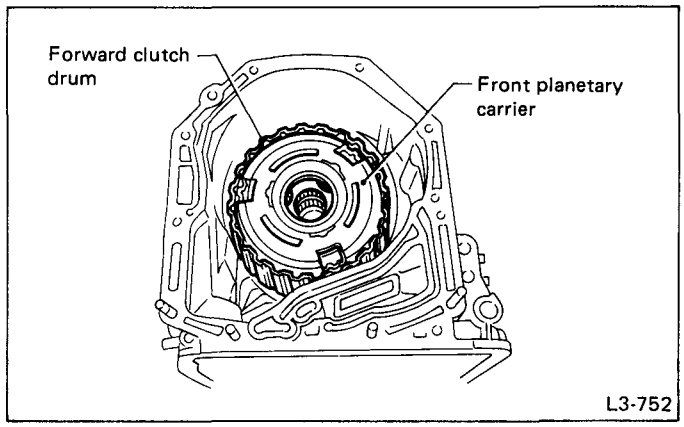

Fig. 251

19) Install the front sun gear.
Attach the thrust needle bearing* to the gear, and install the gear while turning slowly.

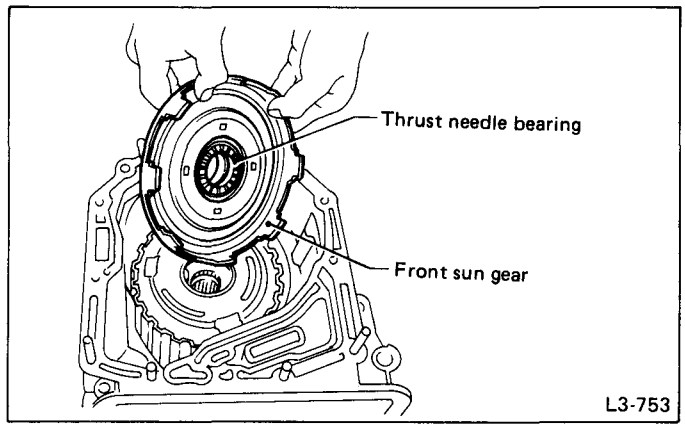

Fig. 252

20) Install the high clutch hub.
Attach the thrust needle bearing * to the hub with vaseline and install the hub by correctly engaging the splines of the front planetary carrier.

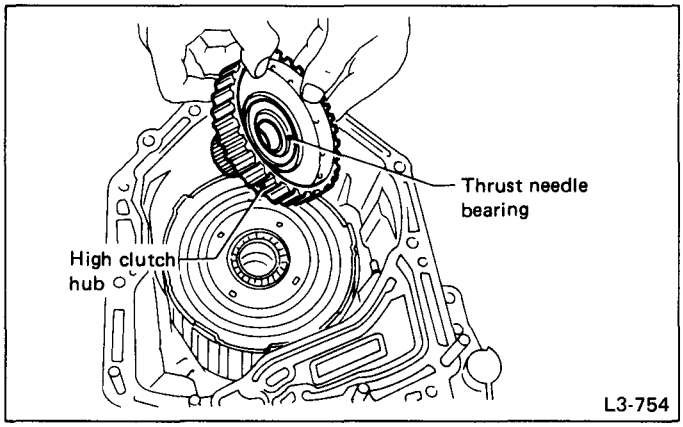

Fig. 253

21) Install the high clutch ASSY.

Correctly engage the high clutch hub and clutch splines.

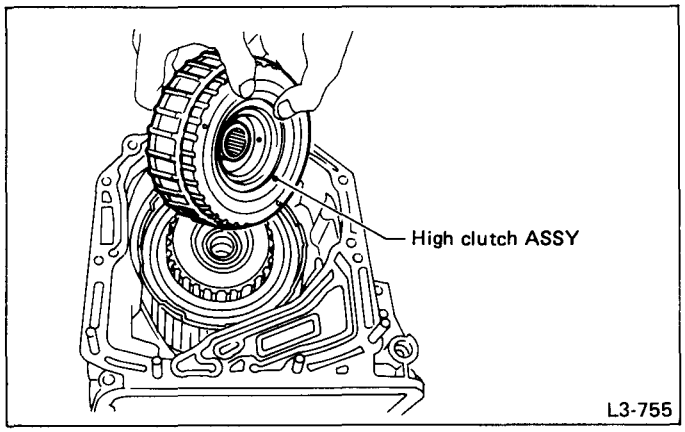

Fig. 254

22) Install the reverse clutch ASSY.

Engage the high clutch outer spline with the reverse clutch spline and the front sun gear with the cut-out portion of the reverse clutch drum correctly when installing.

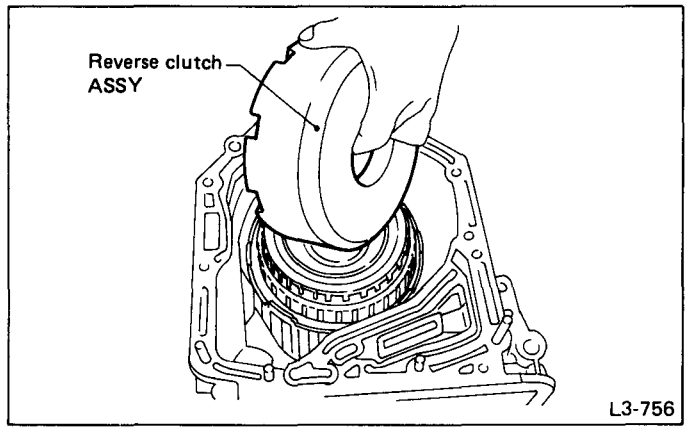

Fig. 255

23) Install the brake band ASSY.

a. Be careful not to damage the brake band when installing.
b. Install the strut to the band servo piston stem. Then tighten it temporarily to avoid tilting the band.

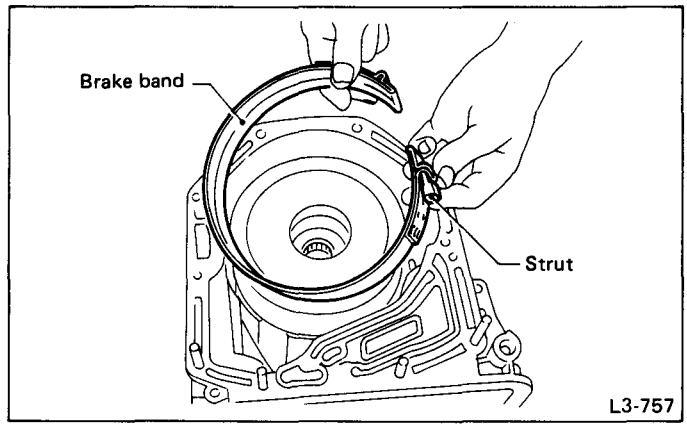

Fig. 256

24) Adjustment of total end play
(1) Measure the distance from the transmission case mating surface to the recessed portion of the high clutch drum, and the distance to the top surface of the reverse clutch drum.

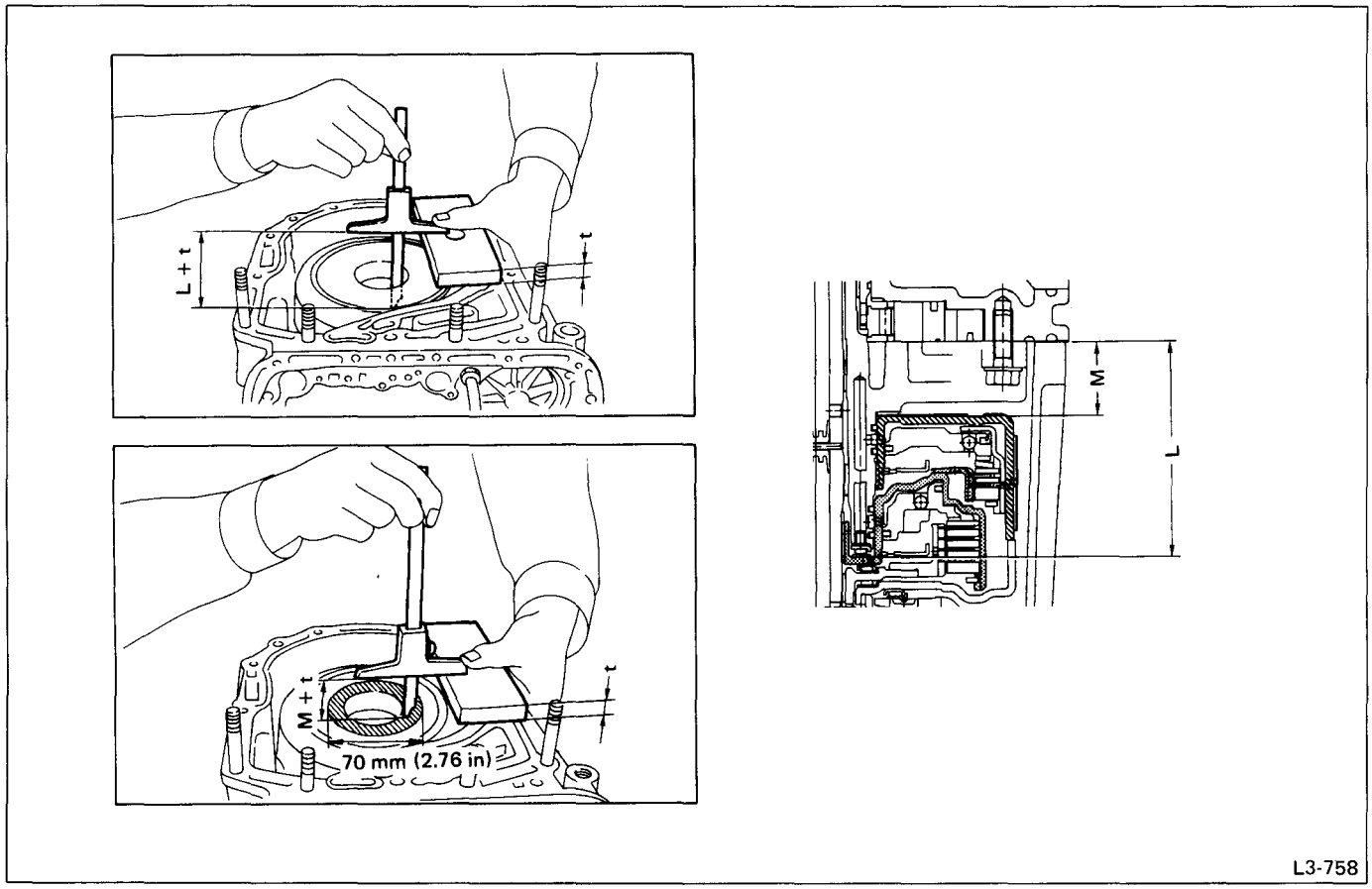

Fig. 257

(2) Measure the distance from the oil pump housing mating surface to the top surface of the oil pump cover with needle bearing, and to the thrust surface of the reverse clutch.

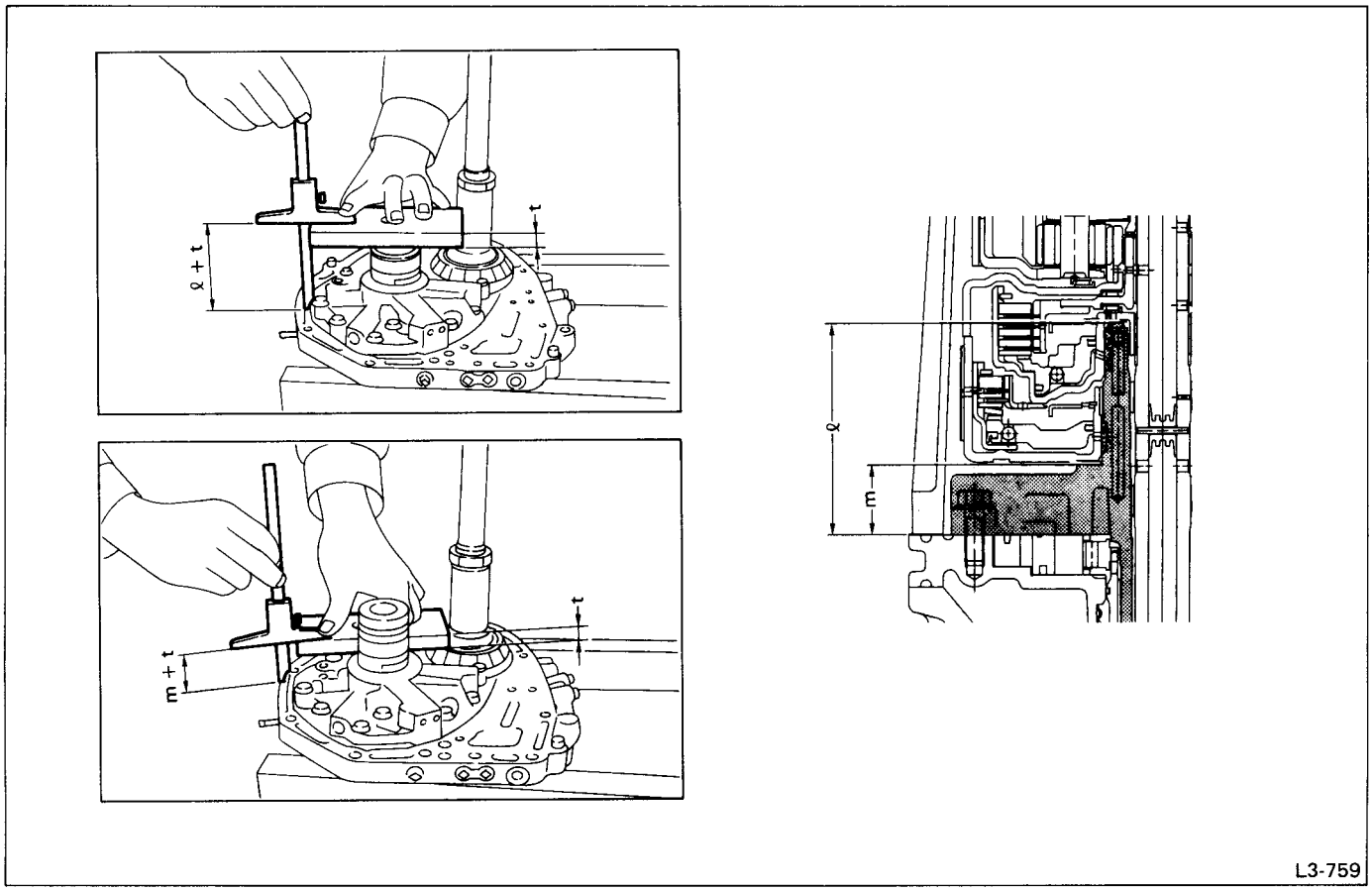

Fig. 258

(3) Equation for calculation Unit: mm

$$T = (L + 0.4) - \ell - (0.25 \text{ to } 0.55)$$

T: Thickness of bearing race
L: Depth of the recess of high clutch drum from case mating surface
ℓ: Height of top surface of the oil pump cover with needle bearing from the mating surface of the housing
0.4: Thickness of gasket
0.25 to 0.55: Total end play standard value

Part No.	Thickness mm (in)
803031021	0.8 (0.031)
803031022	1.0 (0.039)
803031023	1.2 (0.047)
803031024	1.4 (0.055)
803031025	1.6 (0.063)
803031026	1.8 (0.071)
803031027	2.0 (0.079)

$$t = (M + 0.4) - m - (0.55 \text{ to } 0.9)$$

t: Thickness of thrust washer
M: Depth of top surface of reverse clutch drum from case mating surface
m: Height of reverse clutch thrust surface from housing mating surface.
0.4: Thickness of gasket
0.55 to 0.9: Total end play standard value

Part No.	Thickness mm (in)
31299AA000	0.7 (0.028)
31299AA010	0.9 (0.035)
31299AA020	1.1 (0.043)
31299AA030	1.3 (0.051)
31299AA040	1.5 (0.059)
31299AA050	1.7 (0.067)
31299AA060	1.9 (0.075)

25) Install the oil pump housing ASSY.
(1) After completing end play adjustment, insert the bearing race * in the recess of the high clutch. Attach the thrust washer to the oil pump cover with vaseline.

(2) After correctly installing the gasket to the case mating surface, carefully install the oil pump housing ASSY. Be careful to avoid hitting the drive pinion against the inside of the case.

a. Be careful not to damage the seal ring.
b. Be sure to use a new gasket.

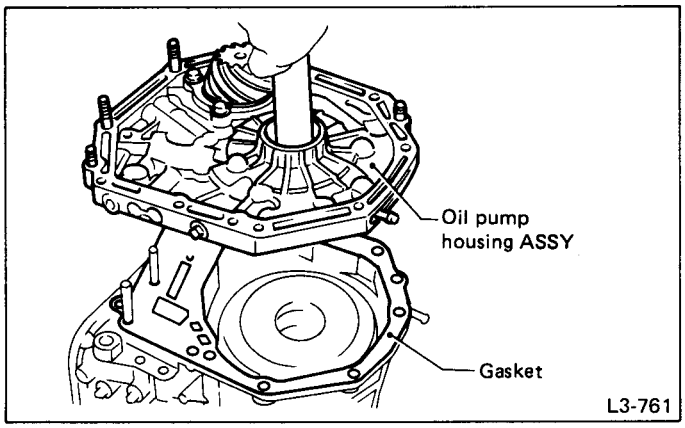

Fig. 259

(3) Install both parts with dowel pins aligned. Make sure no clearance exists at the mating surface.

Any clearance suggests a damaged seal ring.

(4) Secure the housing with two nuts.

Tightening torque:
33 ± 3 N·m (3.4 ± 0.3 kg-m, 24.6 ± 2.2 ft-lb)

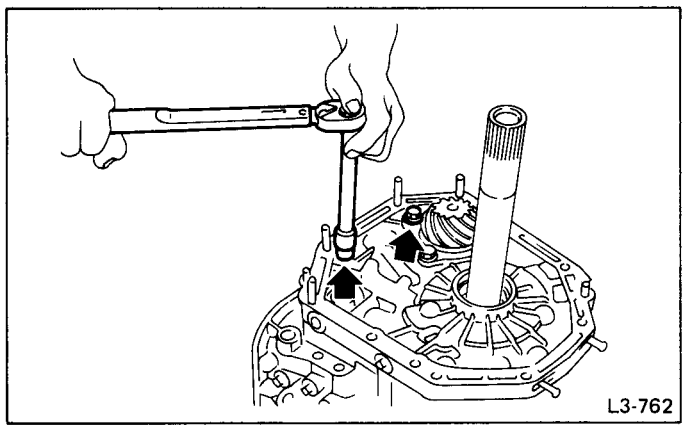

Fig. 260

3. CONNECTION OF CONVERTER CASE AND TRANSMISSION CASE

1) Apply proper amount of liquid gasket (Three-bond #1215) to the entire converter case mating surface.

Make sure that the rubber seal and seal pipe are fitted in position.

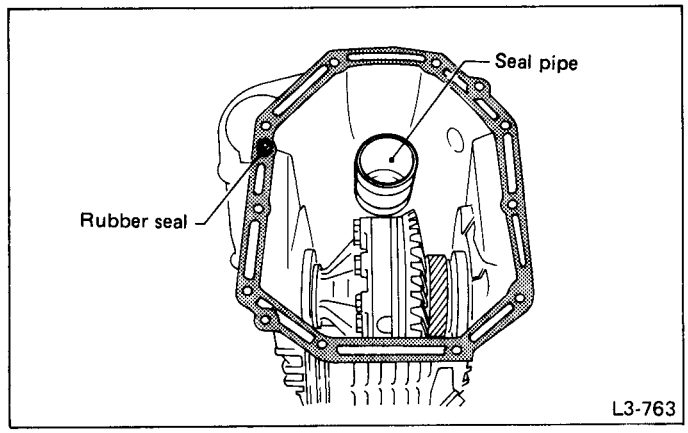

Fig. 261

2) Install the converter case ASSY to the transmission case ASSY, and secure with six bolts and four nuts.

Tightening torque:
33 ± 3 N·m (3.4 ± 0.3 kg-m, 24.6 ± 2.2 ft-lb)

When installing, be careful not to damage the converter case bushing and oil seal.

4. INSTALLATION OF CONTROL VALVE AND OIL PAN

1) Install four accumulators.

Be careful not to confuse the springs and installation positions.

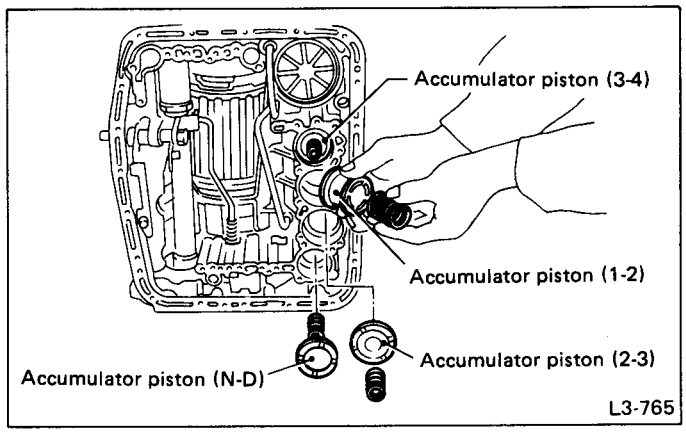

Fig. 262

Spring spec.

mm (in)

Accumulator spring	Outer diameter	Free length
1-2	28.5 (1.122)	44.5 (1.752)
2-3	20.5 (0.807)	31.0 (1.220)
3-4	17.3 (0.681)	43.7 (1.720)
N-D	17.8 (0.701)	36.5 (1.437)

2) Install and route the transmission harness.

Be careful not to damage the harness.

3) Install the control valve ASSY.
(1) Set the select lever in range "2".
(2) Install the control valve by engaging the manual valve and manual lever, then tighten the 19 bolts.

Tightening torque:
8 ±1 N·m (0.8 ± 0.1 kg-m, 5.8 ± 0.7 ft-lb)

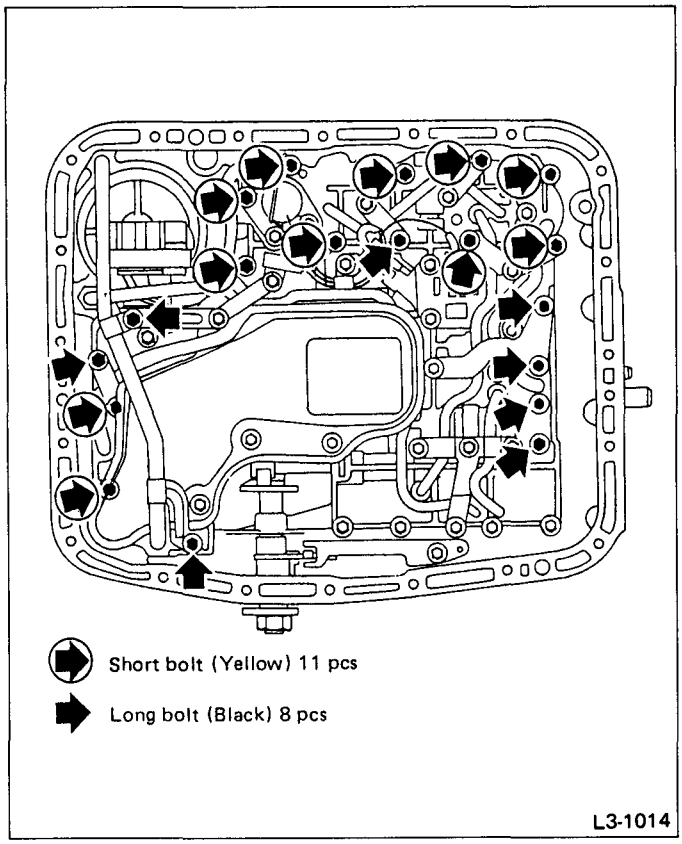

Fig. 263

a. Be careful not to pinch the harness roll the gasket.
b. Tighten the control valve mounting bolts evenly.

4) Install the oil strainer to the control valve. Be careful not to cut or break the O-ring. Then tighten bolts.

Tightening torque:
8 ± 1 N·m (0.8 ± 0.1 kg-m, 5.8 ± 0.7 ft-lb)

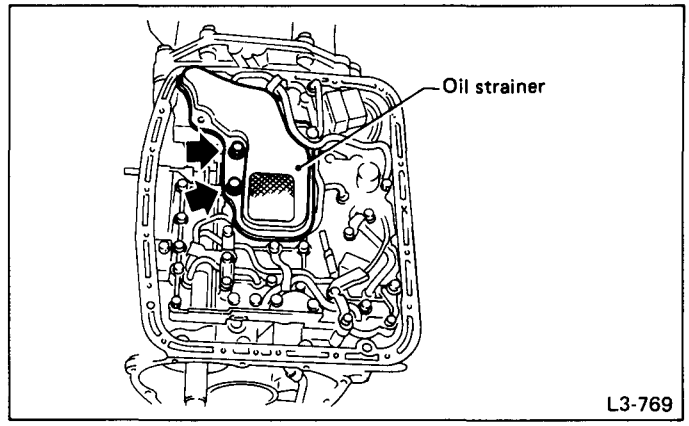

Fig. 264

5) Secure five connectors.

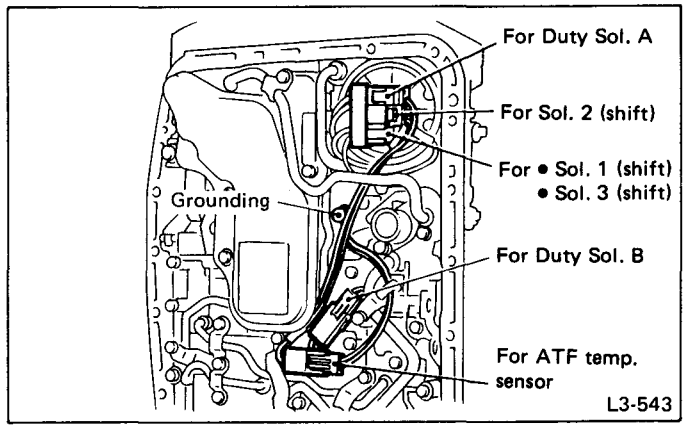

Fig. 265

6) Install the oil cooler outlet pipe, and secure with two bolts.

Tightening torque:
8 ± 1 N·m (0.8 ± 0.1 kg-m, 5.8 ± 0.7 ft-lb)

Fit the pipe into position. Be careful to avoid twisting.

7) Install the oil pan.
(1) Attach the magnet at the specified position.

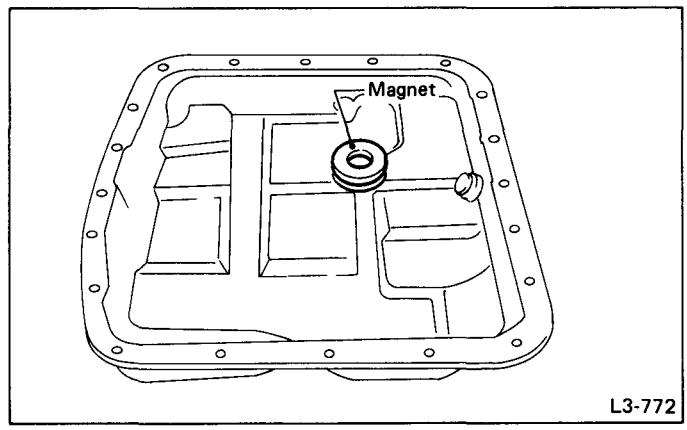

Fig. 266

(2) With gasket inserted, secure the oil pan by tightening 20 bolts.

Tightening torque:
3.9 ± 0.5 N·m (0.4 ± 0.05 kg-m, 2.9 ± 0.4 ft-lb)

Tighten the bolts evenly.

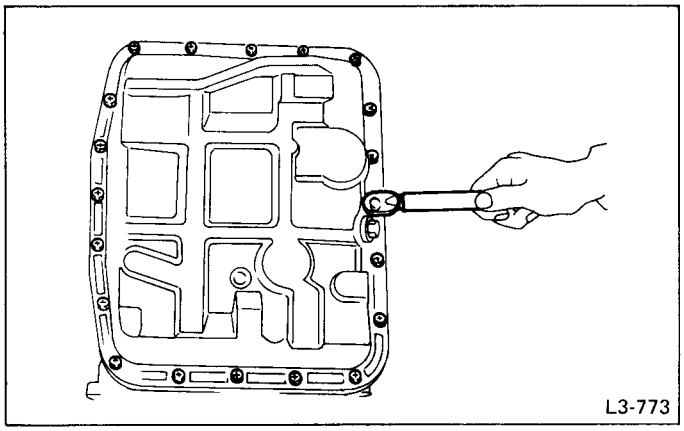

Fig. 267

5. EXTENSION CASE

1) Install the filter in the extension case.

Pay attention to the orientation of the filter.

2) Install the transfer clutch valve ASSY, and secure with four bolts.

Tightening torque:
8 ± 1 N·m (0.8 ± 0.1 kg-m, 5.8 ± 0.7 ft-lb)

a. Be sure to tighten the going lead with one of these bolts.
b. Be sure to use a new gasket.

3) Install the pipe, and clamp securely.
4) Install the transfer clutch assembly to the case.

a. Be careful not to damage the seal rings.
b. Insert the clutch assembly fully into position until the bearing shoulder bottoms.

6. CONNECTION BETWEEN EXTENSION CASE AND TRANSMISSION CASE

1) Install the revolution sensor to the transmission case with one bolt. (FWD model only)

Tightening torque:
7 ± 1 N·m (0.7 ± 0.1 kg-m, 5.1 ± 0.7 ft-lb)

2) Install the reduction driven gear.
3) Install the parking pawl and shaft, set the select lever in the "P" range and tighten the drive pinion lock nut.

Tightening torque:
98 ± 5 N·m (10 ± 0.5 kg-m, 72.3 ± 3.6 ft-lb)

After tightening, stake the lock nut securely.

4) Install the reduction drive gear ASSY.

Insert it fully into position until the bearing shoulder bottoms.

5) Adjustment of extension end play:
(1) Measure the distance from the transmission case mating surface to the reduction drive gear end surface.

FWD model: Measure the distance from the transmission case mating surface to the bearing end face.

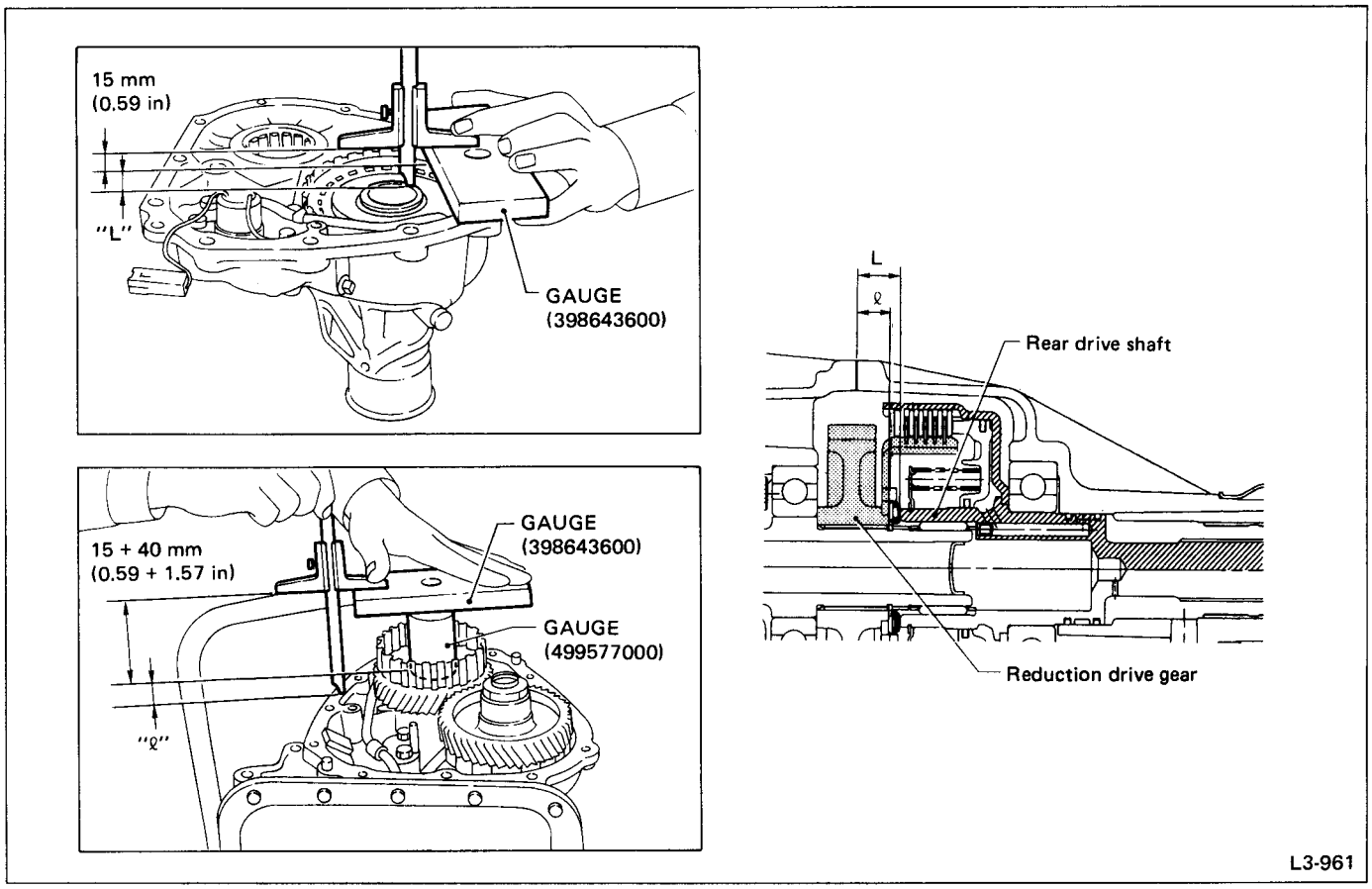

Fig. 268

(2) Measure the distance from the extension case mating surface to the rear drive shaft end face.

FWD model: Measure the distance from the cover case mating surface to the bearing mounting surface.

(3) Calculation equation: Unit (mm)

$$T = (L + 0.4) - \ell - (0.05 \text{ to } 0.25)$$

T: Thickness of thrust bearing
(FWD model: Thickness of Al washer)
L: Distance of rear drive shaft end face from extension case mating surface
(FWD model: Depth of bearing mounting face from cover case mating surface)
ℓ: Height of reduction drive gear end surface from transmission case mating surface
(FWD model: Height of bearing end face from transmission case mating surface)
0.4: Thickness of gasket
0.05 to 0.25: Standard value of end play

Part No.	Thickness mm (in)
806535020	3.8 (0.150)
806535030	4.0 (0.157)
806535040	4.2 (0.165)
806535050	4.4 (0.173)
806535060	4.6 (0.181)
806535070	4.8 (0.189)
806535090	5.0 (0.197)

6) Installation of extension case 4WD, cover case FWD and transmission case.

4WD model:

(1) Attach the selected thrust needle bearing* to the end-surface of reduction drive gear with vaseline.

(2) Set the parking return spring.

(3) Remove the transfer clutch from the extension case. Set the needle bearing on the reduction drive shaft and then install transfer clutch to the transfer clutch hub.

Be sure to engage the spline teeth correctly.

(4) With gasket inserted between them, install the extension case to the transmission case. (Be sure to use a new gasket.)

a. After inserting the extension case halfway, connect the connector for duty sol. C. Be careful not to jam the cord in the case.
b. Be careful not to damage the rear drive shaft seal ring.

(5) Tighten bolts to secure the case.

Tightening torque:
25 ± 2 N·m (2.5 ± 0.2 kg-m, 18.1 ± 1.4 ft-lb)

FWD model:
(1) Attach the selected aluminum washer to the cover case with vaseline.
(2) Set the parking return spring.
(3) With gasket inserted between them, install the cover case to the transmission case.

a. Be sure to use a new gasket.
b. Install the case while ensuring proper alignment of the bearing, parking shaft, and reduction driven gear.

(4) Tighten bolts to secure the case.

Tightening torque:
25 ± 2 N·m (2.5 ± 0.2 kg-m, 18.1 ± 1.4 ft-lb)

7. INSTALLATION OF EXTERIOR PARTS

1) Install the revolution sensor. (4WD only)

Tightening torque:
7 ± 1 N·m (0.7 ± 0.1 kg-m, 5.1 ± 0.7 ft-lb)

2) Installation and adjustment of inhibitor switch:
(1) Install the inhibitor switch to the transmission case. Fit the projecting portion of the switch in the recessed portion of the case, and tighten three bolts temporarily.
(2) Insert the range selector lever into the shaft, and tighten the nut.

Tightening torque:
39 ± 3 N·m (4.0 ± 0.3 kg-m, 28.9 ± 2.2 ft-lb)

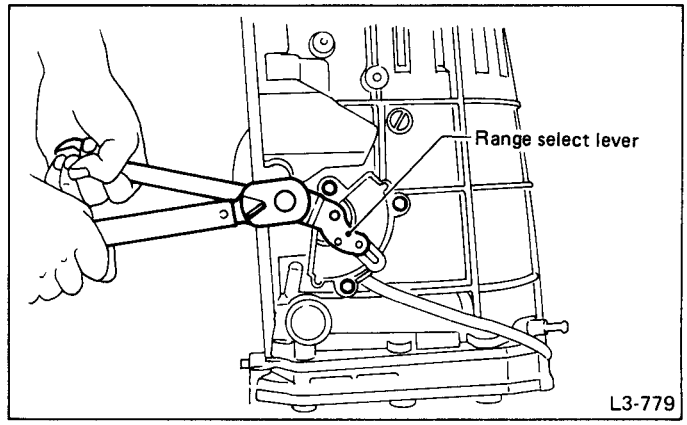

Fig. 269

(3) With the selector lever set to "N" adjust the inhibitor switch so that the hole of range selector lever is aligned with the inhibitor switch hole.

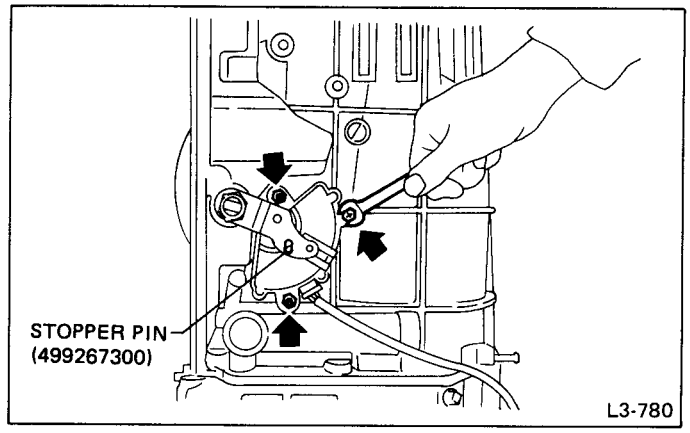

Fig. 270

(4) With hole aligned, tighten three bolts to secure the inhibitor switch.

Tightening torque:
3.4 ± 0.5 N·m (0.35 ± 0.05 kg-m, 2.5 ± 0.4 ft-lb)

3) Clip the following cords and harness:
(1) Transmission harness
(2) Inhibitor switch cord
(3) Revolution sensor cord (4WD only)
4) Install the oil cooler outlet pipe.

Tightening torque:
30.9 ± 3.4 N·m (3.15 ± 0.35 kg-m, 22.8 ± 2.5 ft-lb)

5) Install the oil cooler inlet pipe.

Tightening torque:
25 ± 2 N·m (2.5 ± 0.2 kg-m, 18.1 ± 1.4 ft-lb)

Be sure to use a new aluminum washer.

6) Install the oil charge pipe.

Tightening torque:
30.9 ± 3.4 N·m (3.15 ± 0.35 kg-m, 22.8 ± 2.5 ft-lb)

Be careful not to damage the O-ring.

7) Adjustment of brake band:
(1) After tightening the brake band adjusting screw to 9 N·m (0.9 kg-m, 6.5 ft-lb) torque, back it off three turns. Then secure with a lock nut.

Lock nut tightening torque:
25 – 28 N·m (2.5 – 2.9 kg-m, 18 – 21 ft-lb)

When tightening the lock nut, be careful not to turn the adjusting screw.

8) Install the pitching stopper.

Tightening torque:
39 ± 3 N·m (4.0 ± 0.3 kg-m, 28.9 ± 2.2 ft-lb)

9) Tighten the drain plugs.

Tightening torque:
Diff.
44 ± 3 N·m (4.5 ± 0.3 kg-m, 32.5 ± 2.2 ft-lb)
ATF
25 ± 2 N·m (2.5 ± 0.2 kg-m, 18.1 ± 1.4 ft-lb)

10) Install the air breather hose.
11) Insert the input shaft while turning lightly by hand.

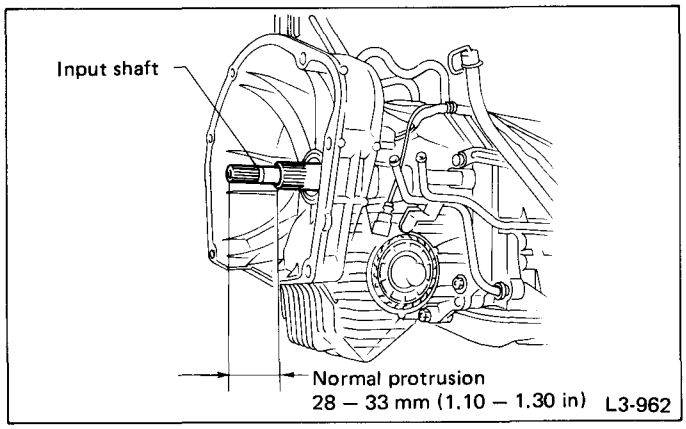

Fig. 271 Inserting input shaft

Be careful not to damage the bushing.

12) Install the torque converter assembly.
(1) Install the oil pump shaft to the torque converter.

Make sure the clip fits securely in its groove.

(2) Holding the torque converter assembly by hand, carefully install it to the converter case. Be careful not to damage the bushing. Also, to avoid undue contact between the oil pump shaft bushing and stator shaft portion of the oil pump cover.
(3) Rotate the shaft lightly by hand to engage the splines securely.

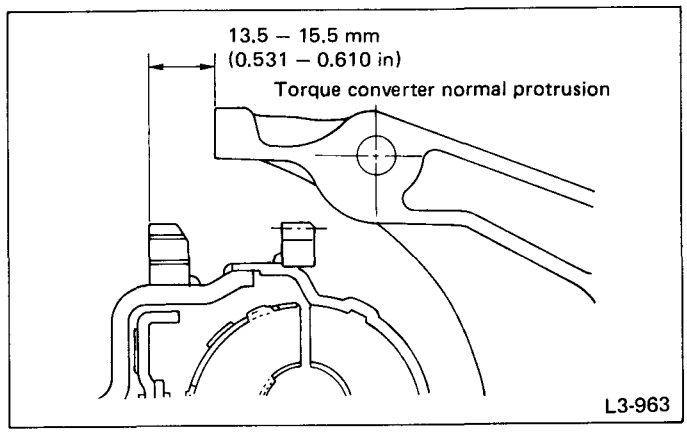

Fig. 272 Protrusion of torque converter

13) Add oil:

Specified quantity ℓ (US qt, Imp qt)
Diff.
1.3 – 1.5 (1.4 – 1.6, 1.1 – 1.3)
ATF
FWD: 9.3 (9.8, 8.2)
4WD: 9.5 (10.0, 8.4)

After adding oil, insert the oil level gauge into the oil inlet.

TROUBLESHOOTING

GENERAL NOTES

1) Problems in the electronic-controlled automatic transmission may be caused by failure of the engine, the electronic control system, the transmission proper, or by a combination of these. These three causes must be distinguished clearly when troubleshooting.

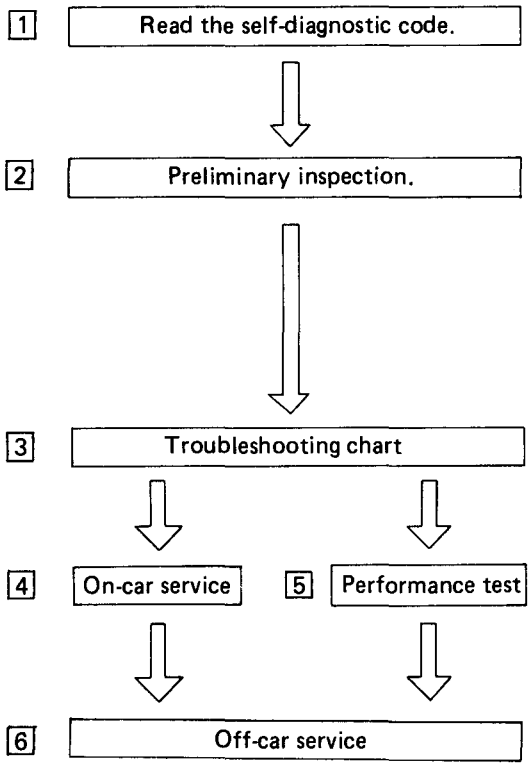

2) Troubleshooting should be conducted by rotating with simple, easy operations and proceeding to complicated, difficult operations. The most important thing in troubleshooting is to understand the customer's complaint, and distinguish between the three causes.

3) The general flow of troubleshooting is shown below:

Read the trouble code on the "POWER" indicator, and perform operation according to the code.

Check the following items:

- Fluid level
- Idling speed
- Inhibitor switch
- Shift linkage
- Fluid leakage, etc.

See "Service Procedure".

1 Troubleshooting for Electrical Transmission Control System

1) WIRING DIAGRAM

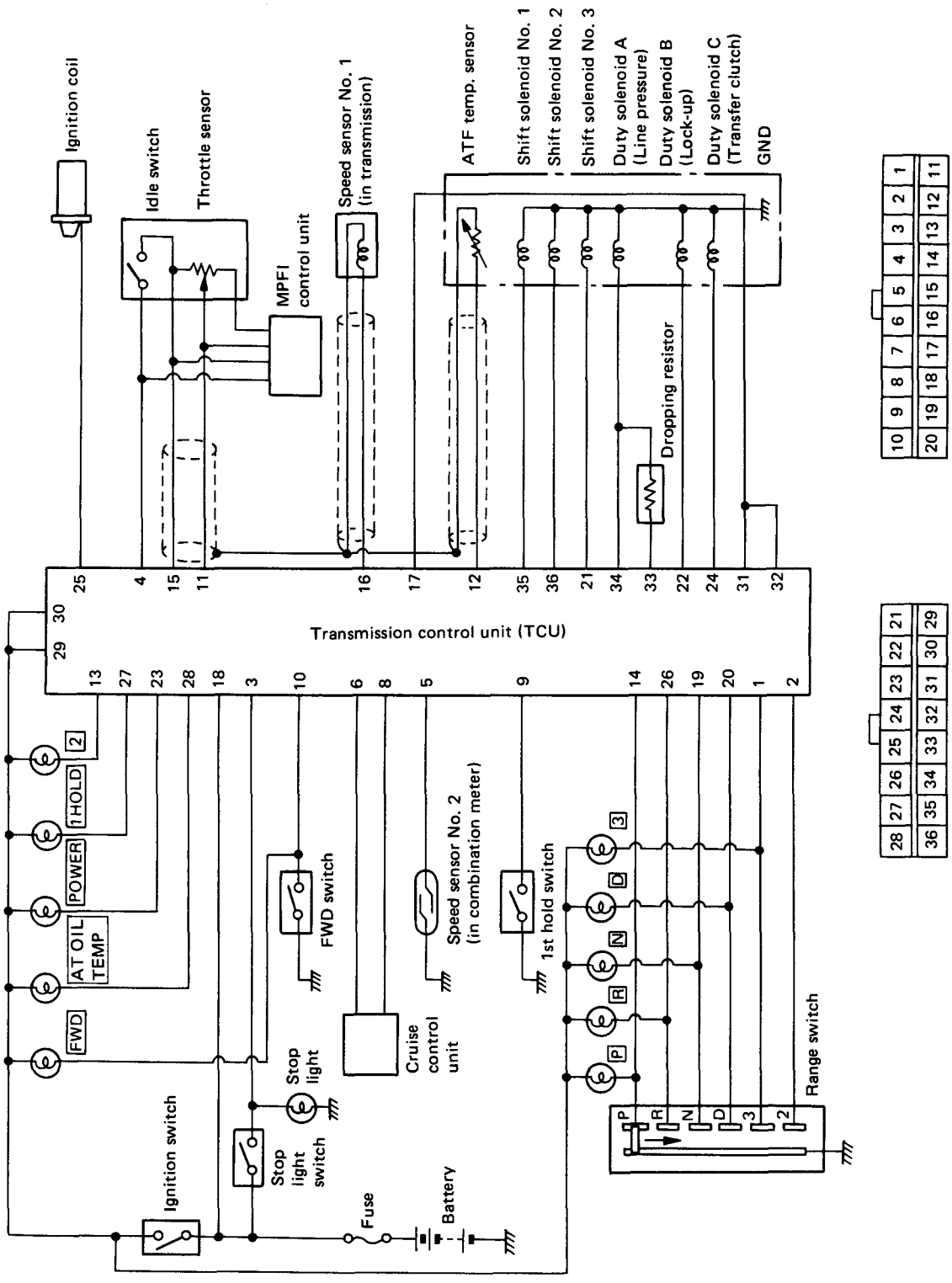

Fig. 273

L3-964

2) FUNCTION OF SELF-DIAGNOSIS

(1) Self-diagnosis Items

The following items can be checked for improper operation using the self-diagnosis system.

- Vehicle-revolution sensor No. 1 (on transmission)
- Vehicle-revolution sensor No. 2 (in combination meter)
- Shift solenoid No. 1
- Shift solenoid No. 2
- Shift solenoid No. 3
- Duty solenoid A (Line-pressure)
- Duty solenoid B (Lock-up)
- Duty solenoid C (Transfer clutch)
- Throttle sensor

(2) Troubleshooting Chart

	Trouble	Possible cause
1	No shift	① Shift solenoid No. 1 and/or No. 2 • Severed or short circuit ② Speed sensor No. 1 and No. 2 • Defective or severed ③ Power source and grounding • Severed or short circuit
2	Shift point too high or too low	① Throttle sensor • Defective, severed or short circuit ② Speed sensor No. 1 • Defective or severed
3	No up-shift to overdrive (after warm-up)	① Range switch • Severed or short circuit ② ATF temp sensor • Defective or severed ③ Cruise control unit • Operation unusual or short circuit
4	No back-up (after warm-up)	① Duty solenoid B • Severed or short circuit ② ATF temp sensor • Defective, severed or short circuit ③ Ignition pulse • Severed wire harness ④ Idle switch • Severed or short circuit
5	No engine braking effect at "3" range	① Shift solenoid No. 3 • Severed or short circuit ② Throttle sensor • Defective, severed or short circuit ③ Range switch • Severed or short circuit
6	Excessive shift shock	① Duty solenoid A • Severed or short circuit ② Throttle sensor • Defective, severed or short circuit
7	Excessive tight corner braking	① Duty solenoid C • Severed or short circuit ② Throttle sensor • Defective, severed or short circuit ③ Speed sensor No. 1 • Defective, severed or short circuit

(3) Indication of Malfunctioning Self-diagnosis Items

Malfunctioning self-diagnosis items are indicated on the POWER indicator in terms of "trouble codes".

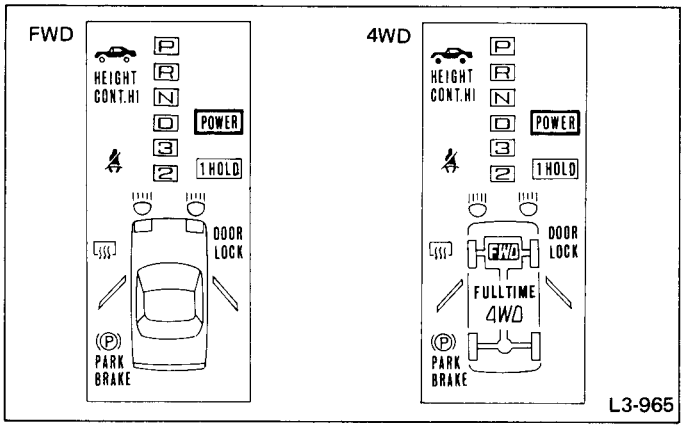

Fig. 274

Indicator signal is as follows:

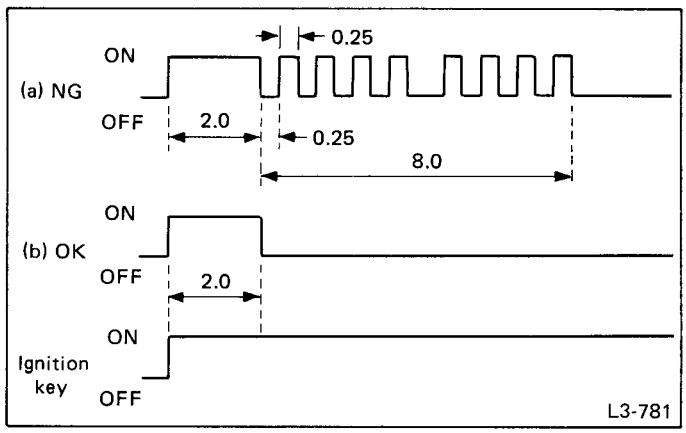

Fig. 275 POWER indicator signal (unit: second)

Warning can be noticed only when the ignition switch is initilly turned to ON.

(4) Checking the Trouble History

Trouble history of self-diagnosis items is indicated on the POWER indicator in terms of "trouble codes" using the following method ① or ② as applicable.

① 4WD. . . . Insert fuse into FWD switch.

② FWD. . . . Ground self-diagnosis terminal of check connector (17-pin connector).

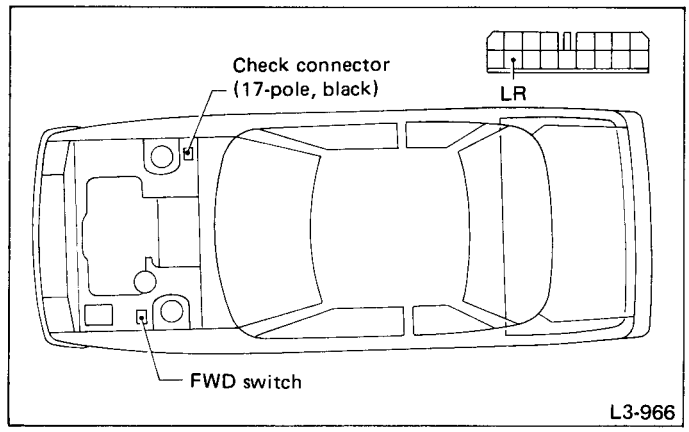

Fig. 276

(5) Calling up Trouble Codes

A malfunctioning self-diagnosis item can be determined using the procedure outlined in the flowchart below.

Low battery voltage will cause faulty operation of the diagnosis system. Therefore, always be sure to check the battery voltage first.

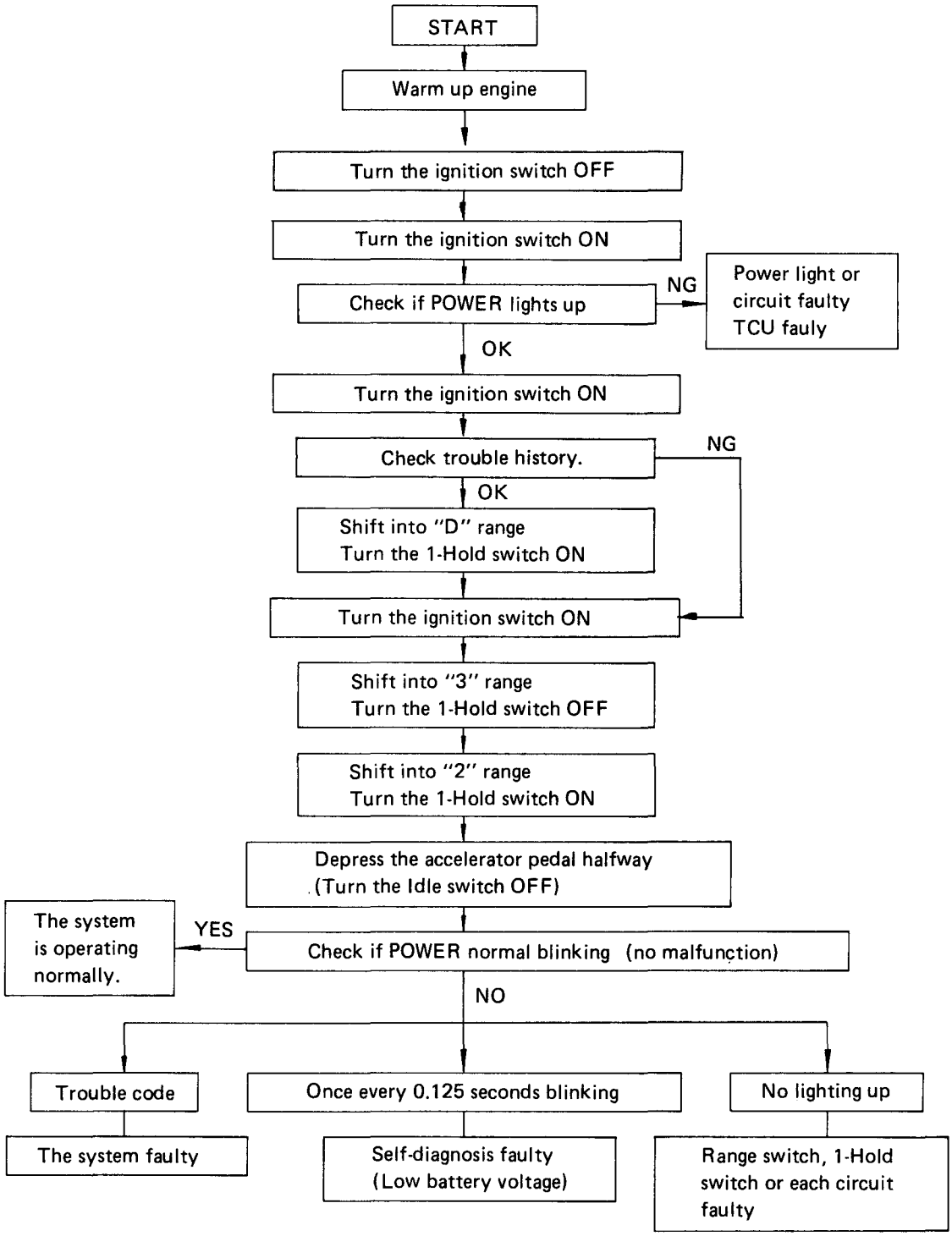

(6) How to Read Trouble Code

In case of malfunction, trouble code will be observed by the specified signal of POWER indicator. The sequence of blinking shows each faulty system and the term of long segment (0.6 sec) blink means its own faulty system code.
Example: Shift solenoid No. 1 fault

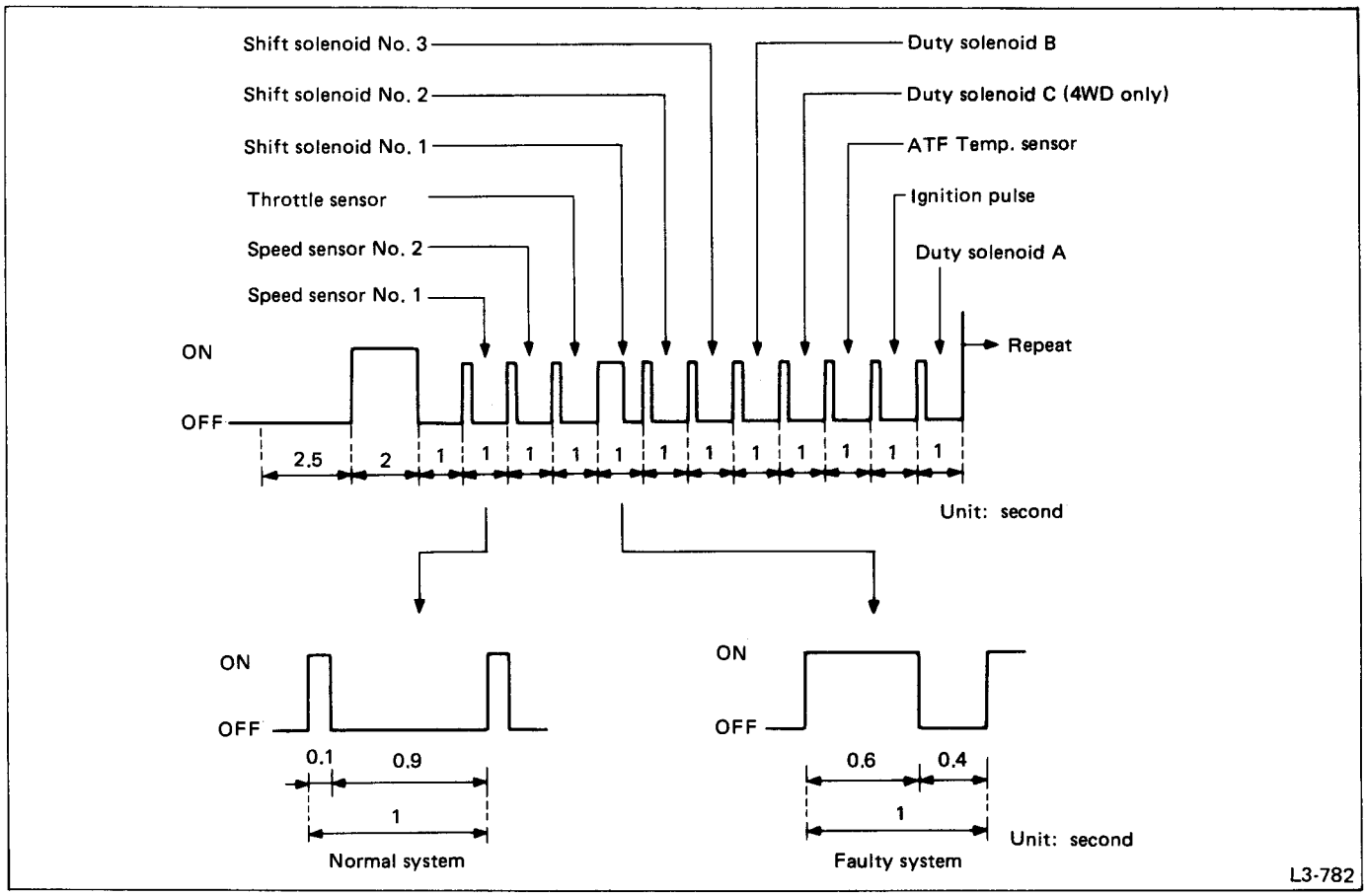

Fig. 277

(7) Troubleshooting for Electronic Control System

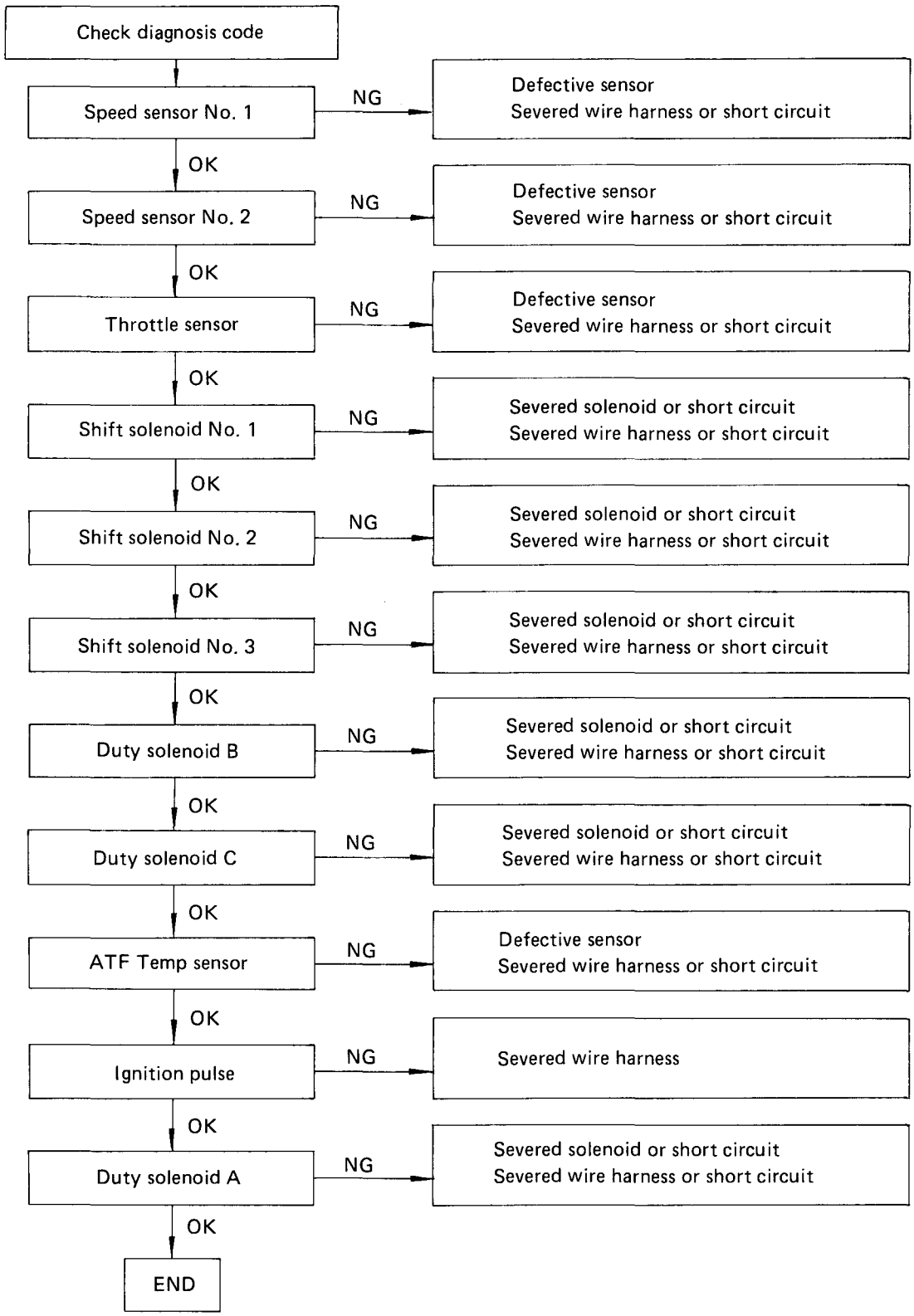

(8) Cancelling the Trouble Code

Trouble codes are cancelled after self-diagnosis; however, those in the trouble history remain in the memory of the control unit after the ignition switch is turned OFF. After repairs, a trouble code can be cancelled by turning the ignition switch OFF and disconnecting the connector from the control unit.

2 Preliminary Inspection

No.	Item to check	Judgment standard
1.	Idling rpm	1800 cc 800±100 rpm 2700 cc 750±100 rpm
2.	Idling boost (intake manifold)	More than −53.3 kPa (−400 mmHg, −15.75 inHg)
3.*	Stall rpm	1800 cc 2,450 – 2,850 rpm 2700 cc 2,400 – 2,800 rpm
4.	Operation of linkage between accelerator pedal and throttle body	Throttle valve must open and close fully in response to accelerator pedal movement.
5.	Inhibitor switch circuit	Must be in good condition.
6.	ATF	Must be maintained at specified level.
7.	Differential gear oil	Must be maintained at specified level.
8.	ATF leakage	Must not occur at ATF cooling circuit or other parts.
9.	Oil leakage	Must not occur from any part of transmission.

*** Check before engine is adjusted.**

3 Troubleshooting Chart

Symptom	Reference No.		Probable cause
	On-car check	Unit check	
Starter runs in R, D or 2 range, but not in P or N range.	1, 2, 6, 7, 9		Transmission exterior parts: 1. Inhibitor switch out of adjustment 2. Faulty inhibitor switch 3. Faulty control unit 4. Faulty car-revolution sensor 1 5. Faulty car-revolution sensor 2 6. Select cable out of adjustment 7. Faulty select lever 8. FWD fuse remains installed 9. Faulty starter motor or harness 10. Faulty throttle sensor 11. Faulty 1st hold switch Parts inside oil pan: 12. Faulty N-D accumulator 13. Faulty 2A accumulator 14. Faulty 4A accumulator 15. Faulty 3R accumulator 16. Faulty ATF temperature sensor 17. Clogged strainer 18. Faulty duty solenoid A 19. Faulty duty solenoid B 20. Faulty shift solenoid 1 21. Faulty shift solenoid 2 22. Faulty shift solenoid 3 23. Valve sticking 24. Faulty detent spring 25. Faulty manual plate 25a. Faulty strainer seal Parts inside extension case: 26. Faulty transfer clutch 27. Transfer valve sticking 28. Transfer pilot valve sticking 29. Faulty transfer pipe 30. Faulty duty solenoid C 31. Noisy duty solenoid C 32a. Faulty forward clutch relief ball 32b. Faulty overrunning clutch relief ball
Noise is emitted in N or P range.	72, 65, 31	40	
Noise (shudder) is emitted when car starts.	72		
Noise is emitted in D_1 range.	73	37, 60, 61	
Noise is emitted in D_2 range.	73	37, 60, 61	
Noise is emitted in D_3 range.	73	37, 61	
Noise is emitted in D_4 range.	73	37, 60, 61	
Engine stalls while shifting to any range.	23, 76	77	
Engine stalls in P range and driving in N range.		42	
Shock is felt when shifting from N to D range.	70, 12, 23, 3		
Lengthy time lag when shifting from N to D range.	23, 32a	41	
Shock is felt when shifting from N to R range.	23, 14, 70		
Lengthy time lag when shifting from N to R range.	23	49, 51	
Car does not move in any range though engine revs up.	72, 17, 23	64, 65, 56, 57, 33, 34, 35, 36, 60, 40	
Engine stalls in all ranges.		62	
Car does not move in R range though engine revs up.	23	49, 51	
Engine stalls in R range.		42, 48	
Car does not move in D or 3 range though engine revs up.		53, 54	
Car does not move in D, 3 or 2 range though engine revs up.		41, 32a	

Symptom	Reference No.		Probable cause
	On-car check	Unit check	
Engine stalls in D, 3 or 2 range.		52	Parts inside differential case: 33. Drive pinion broken 34. Crown gear broken 35. Axle shaft broken 36. Differential gear broken 37. Poor/improper contact of final gear 38. Faulty seal pipe 39. Faulty speedometer gear Parts inside transmission: 40. Oil pump seized or broken or foreign matter in pump 41. Forward clutch slippage 42. Forward clutch seized 43. Overrunning clutch slippage 44. Overrunning clutch seized 45. High clutch slippage 46. High clutch seized 47. Band & servo slippage 48. Band seized 49. Low & reverse brake slipping 50. Low & reverse brake seized 51. Reverse clutch slippage 52. Reverse clutch seized 53. Faulty O.W.C. (1-2) 54. Faulty O.W.C. (3-4) 55. Faulty double oil seal 56. Input shaft broken 57. Reduction drive shaft broken 58. Planetary gear broken 59. Reduction gear broken 60. Poor/improper contact of planetary gear 61. Poor/improper contact of reduction gear 62. Faulty parking brake mechanism
Car does not move in D, 3 or 2 range though engine revs up.	23, 3	54	
Poor acceleration: • High stall rpm • Low stall rpm • Proper stall rpm (Poor acceleration in D, 3 or 2 range) • Proper stall rpm (Poor acceleration in R range)	 72, 23 3, 23 23	 41, 51 76, 66, 40 46, 48 46, 48, 44	
No shifts: • 1 → 2 • 2 → 3 • 3 → 4 • K/D	 3, 23 3, 23 3, 23, 16 3, 10	 47 45 47	
No engine braking in: • 3 range only • 3, 2 or 1 range • 1 range only	 3, 23, 10 32b 3, 23	 43 49	
Erroneous shift points	3, 23, 10	47	
No lock-up operation	3, 23, 16, 10	68	
No power mode in D range	3, 10		
Power mode not released in D range	3, 10		
Parking brake failure: • No braking • Dragging or failure to release	 6, 7 6, 7	 62 62	
Unusual select force: • Considerable effort required • No or light effort required	 7, 24, 25 24, 25		
Fluid overflow • ATF • Differential oil	 74 75		
Unusual changes in differential oil level		38, 55	
Odor from oil supply pipe	70	41, 43, 45, 47 49, 51	

Symptom	Reference No.		Probable cause
	On-car check	Unit check	
Abnormalities during shifting: • Shock in 1 → 2 shift	3, 23, 13, 10, 70, 76		Other parts: 63. Faulty torque converter ring gear 64. Faulty drive plate 65. Improper installation of drive plate 66. Torque converter or OWC burned or broken 67. Worn parts in torque converter 68. Lock-up facing worn 69. Faulty lock-up damper 70. Deterioration of ATF 71. Deterioration of differential oil 72. ATF level too low 73. Differential oil level too low 74. ATF level too high 75. Differential oil level too high 76. Poor engine performance 77. Lock-up clutch seized
• Slippage in 1 → 2 shift	3, 23, 13, 10	47	
• Shock in 2 → 3 shift	3, 23, 10, 70, 15, 76	47, 45	
• Slippage in 2 → 3 shift	3, 23, 15, 10	47, 45	
• Shock in 3 → 4 shift	3, 23, 10, 70, 14, 76	43	
• Slippage in 3 → 4 shift	3, 23, 14, 10	47	
• Shock in 3 → 2 shift	3, 23, 10, 70	43, 47	
• Shock in D → 3 shift	3, 23, 10, 70	43	
• Shock in 2 → 1 shift	3, 23, 10, 70	49, 43	
Shock is felt when accelerator pedal is released at medium speed or above.	3, 23, 10, 76	69, 77	
Vibration in straight-forward driving	3	69, 77	
Select lever slips out of detents during acceleration or on rough roads.	6, 24, 25		
During 4WD operation: • Vibration in tight corner	4, 70, 10, 3, 11	29, 26, 27, 28, 30	
• Front tires slip on start.	5, 10, 3, 11	29, 26, 27, 28, 30	
• Failure to shift into FWD mode	3, 10, 8	26, 27, 28, 29, 30	

4 On-Car Service

INSPECTION AND ADJUSTMENT

1. ATF LEVEL

1) Raise the ATF temperature to 60 to 80°C (140 to 176°F). [This temperature may be attained by running a distance of 5 to 10 km (3 to 6 miles)].

The level of ATF varies with fluid temperature. Pay attention to the fluid temperature when checking oil level. A change in the ATF level by oil temperature is shown in the following figure.

2) Ensure the vehicle is level. After selecting all positions (P, R, N, D, 3, 2), set the selector lever in "P" range. Measure fluid level with the engine idling.

After running, idle the engine for one or two minutes before measurement.

3) If the fluid level is below the center between upper and lower marks, add the recommended ATF until the fluid level is found within the specified range (above the center between upper and lower marks). When the transmission is hot, the level should be above the center of upper and lower marks, and when it is cold, the level should be found below the center of these two marks.

Use care not to exceed the upper limit level.

■ ATF level

1) ATF level varies with temperature as shown in figure. Remember that the addition of fluid to the upper limit mark when the transmission is cold will result in the overfilling of fluid.

2) Fluid temperature rising speed

- By idling the engine
  Time for rising temperature to 60°C (140°F) with atmospheric temperature of 0°C (32°F): More than 25 minutes

(Reference)

Time for temperature rise to 30°C (86°F) with atmospheric temperature of 0°C (32°F): Approx. 8 minutes

- By running the vehicle
  Time for temperature rise to 60°C (140°F) with atmospheric temperature of 0°C (32°F): More than 10 minutes

3) Method for checking fluid level upon delivery or at periodic inspection.

Check fluid level after a warm-up run of approx. 10 minutes. During the warm-up period, the automatic transmission functions can also be checked.

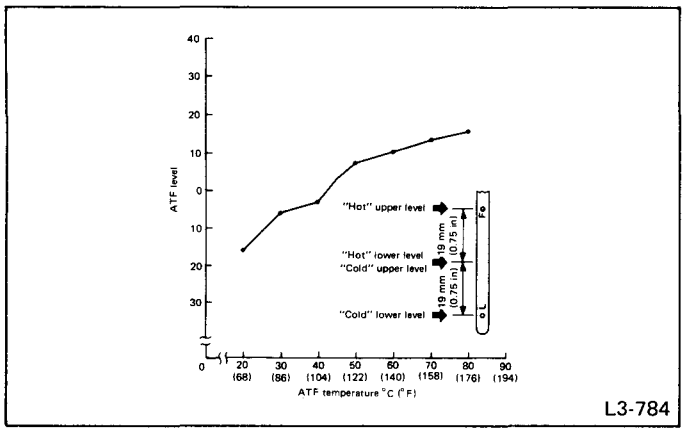

Fig. 278

2. DIFFERENTIAL GEAR OIL LEVEL

1) Ensure the vehicle

Do not check the oil level nor add oil to the case with the front end of the vehicle jacked up; this will result in an incorrect reading of the oil level.

2) Check whether the oil level is between the upper (F) and lower (L) marks. If it is below the lower limit mark, add oil until the level reaches the upper mark.

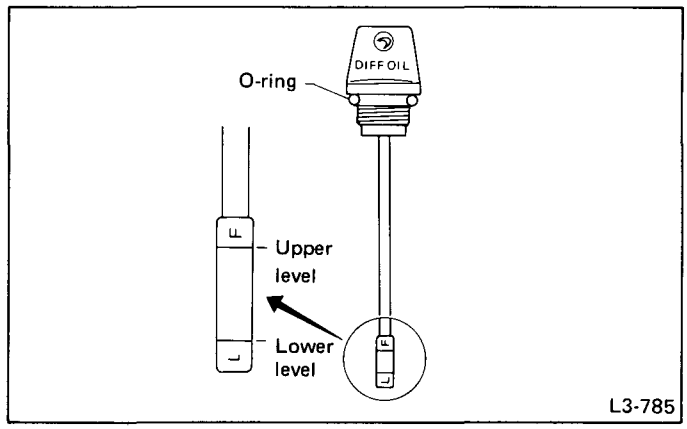

Fig. 279

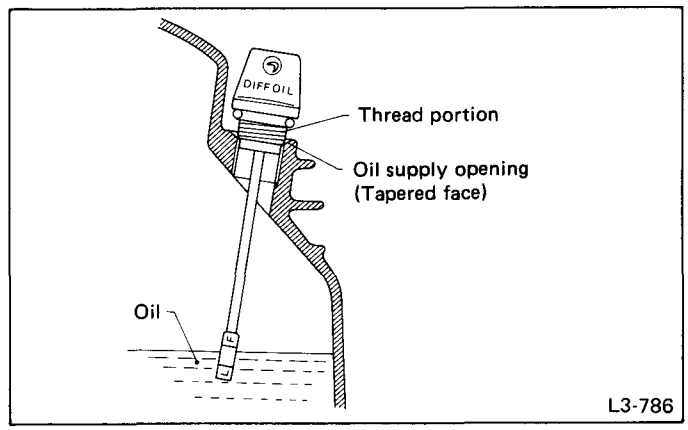

Fig. 280

3. OIL LEAKAGE CHECK POINTS

It is difficult to accurately determine the precise position of a oil leak, since the surrounding area also becomes wet with oil. The places where oil seals and gaskets are used are as follows:

<Jointing portion of the case>

- Transmission case and oil pump housing jointing portion
- Converter case and oil pump housing jointing portion
- Transmission case and transmission cover jointing portion (FWD)
- Transmission case and extension case jointing portion (4WD)

Converter housing

- Engine crankshaft oil seal
- Torque converter impeller sleeve oil seal
- ATF cooler pipe connector
- Torque converter

Converter case

- Converter case
- Axle shaft oil seal
- O-ring on the outside diameter of axle shaft oil seal holder
- O-ring on the differential oil gauge
- Differential oil drain plug
- Speedometer cable mounting portion
- Location of steel balls

Oil pump housing

- Oil pump housing (Defective casting)
- O-ring on the test plugs
- Checking blind plugs
- Differential gear breather

Automatic transmission case

- Transmission case (Defective casting)
- Mating surface of oil pan
- O-ring on the test plugs
- Checking blind plugs (steel balls)
- Oil supply pipe connector
- ATF cooler pipe connector and gasket
- Oil pan drain plug
- O-ring on the transmission harness holder
- O-ring on the oil pump plugs
- ATF breather
- Shift lever oil seal

Extension case

- Extension case (Defective casting)
- O-ring on the revolution sensor
- Rear drive shaft oil seal
- Checking blind plugs (steel ball)
- O-ring on the test plug

Transmission cover

- Transmission cover (Defective casting)

The point listed above should be checked for fluid leak. Checking method is as follows:

(1) Place the vehicle in the pit, and check whether the leaking oil is ATF or not. The ATF is wine red in color, and can be discriminated easily from engine oil and gear oil.

(2) Wipe clean the leaking oil and dust from a suspectable area, using a noninflammable organic solvent such as carbon tetrachloride.

(3) Run the engine to raise the fluid temperature, and set the selector lever to "D" in order to increase the fluid pressure and quickly detect a leaking point.

4. ENGINE IDLING SPEED

Excessively low engine idling rpm will lead to rough engine operation and excessively high idling rpm will lead to a sudden shift shock or creeping when shifting from N to D or R.

Idling rpm for automatic transmission cars (N or P range):
1800: 800±100 rpm
2700: 750±100 rpm

5. BRAKE BAND

If the following abnormal shifting conditions are noted in a road test, the brake band must be adjusted.

■ Shift state and adjustment

1) The 2nd gear state and 4th gear state can be achieved but:

- the engine rpm increase excessively shifting up from 2nd to 3rd.
- a shift delay (over 1 sec) accompanies at kickdown from 3rd to 2nd.

If any of these problems occurs, it is attributable to excessive clearance between the reverse clutch drum and brake band: Tighten the adjust screw by turning it clockwise.

2) The 2nd gear state and 4th gear state can be achieved, but:

- a braking phenomenon is noted when shifting up from 2nd to 3rd.

If this phenomenon is noted, it is attributable to excessively small brake band clearance: Loosen the adjust screw by turning it counterclockwise.

3) When accelerating, direct shift up from 1st to 3rd occurs: . . . . . Excessively large clearance.
When shifting up from 2nd to 3rd, tire slip occurs: . . . . . Excessively small clearance.

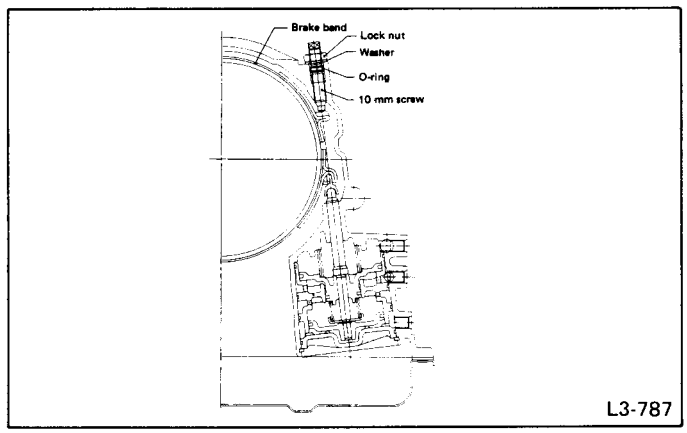

Fig. 284

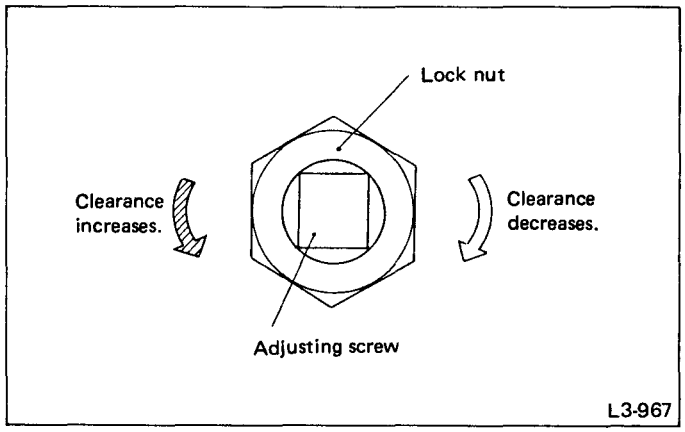

Fig. 281 Clearance control

■ Adjustment of the adjusting screw

1) Using a socket wrench, immobilize the end of the 10 mm screw projecting on the left side of the transmission case, and loosen the nut with a double-end wrench.

In the case of occurrence of problems 1) and 2) mentioned previously, perform the adjustment by loosening or tightening the nut within a range of 3/4 turn from this state.

Tool No.	Tool Name
398603610	SOCKET WRENCH

Do not loosen excessively; otherwise, the band strut on the servo piston will drop off.

2) In case of the occurrence of problem 3) mentioned previously, perform the adjustment as follows:

Adjusting procedure: Tighten adjust screw to 9 N·m (0.9 kg-m, 6.5 ft-lb) torque, then back off three turns.

Do not tighten the adjusting screw with an excessively large torque.

3) With the adjusting screw immobilized, tighten the lock nut to 26±2 N·m (2.7±0.2 kg-m, 20±1.4 ft-lb) torque.

<Inspection>

(1) Separate the cable end from the range select lever.

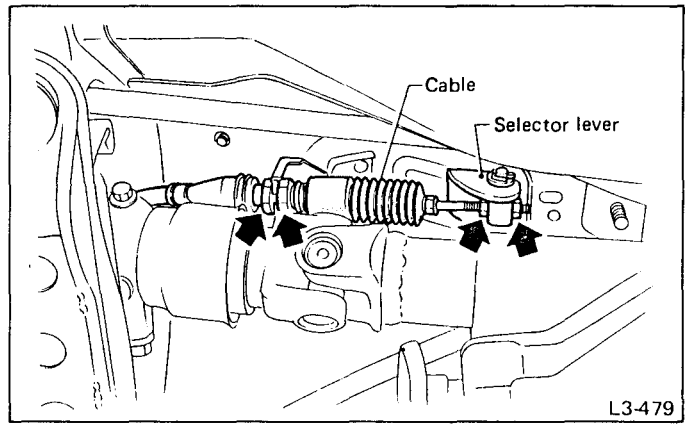

Fig. 282

(2) Using a circuit tester, check continuity in the connectors (for P, R, N, D, 3 and 2 ranges) at the inhibitor switch.

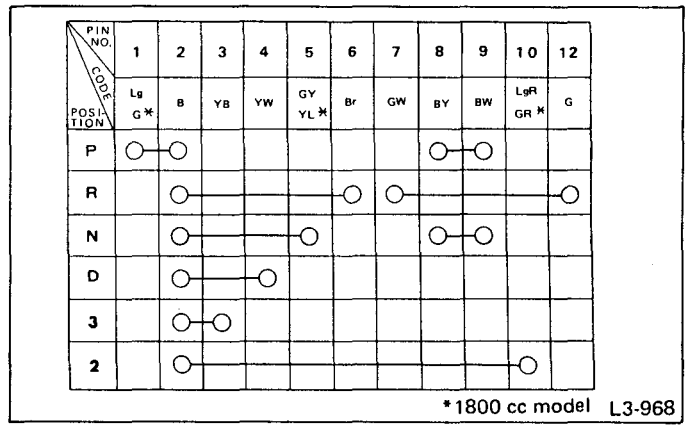

Fig. 283

Also check that continuity in ignition circuit does not exist when selector lever is in R, D, 3 and 2 ranges.

6. INHIBITOR SWITCH

The inhibitor switch allows the back-up lights to turn on when the select lever is in the R range and the starter motor to start when the lever is in the N or P range. It also monitors the input signal electronically controlled for each range and turns on the corresponding range light on the instrument panel.

When light operation, driving condition or starter motor operation is erroneous, first check the shift linkage for improper operation. If the shift linkage is functioning properly, check the inhibitor switch.

(3) Check if there is continuity at equal points when the select lever is turned 1.5° in both directions from the N range.

If there is continuity in one direction and the continuity in the other or if there is continuity at unequal points, adjust the inhibitor switch.

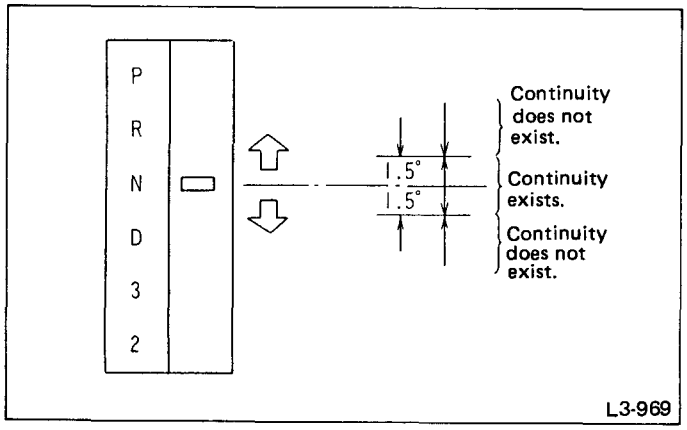

Fig. 285

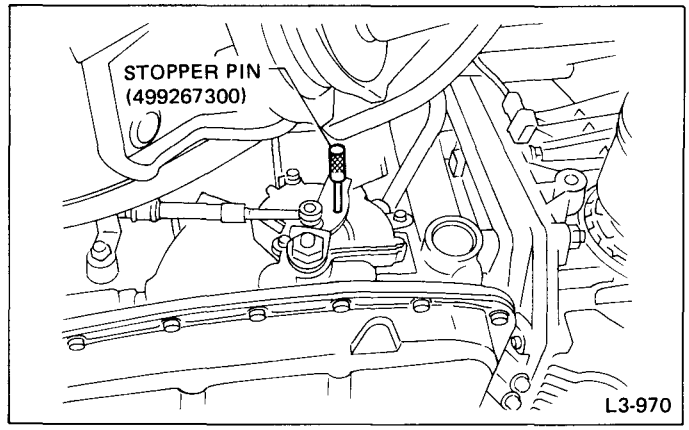

Fig. 286

<Adjustment>

(1) Loosen the three inhibitor switch securing bolts.
(2) Shift the select lever to the N range.
(3) Insert STOPPER PIN (499267300) as vertical as possible into the holes in the inhibitor switch lever and switch body.
(4) Tighten the three inhibitor switch bolts.

Tightening torque:
2.0 – 2.5 N·m
(0.20 – 0.26 kg-m, 1.4 – 1.9 ft-lb)

(5) Repeat the above checks. If the inhibitor switch is determined to be "faulty," replace it.

7. TRANSMISSION HARNESS

1) Check resistance and/or continuity in sensor, solenoid and ground circuits at connector.
2) Also check terminals for shortcircuits.

a. Remove oil pan before checking continuity between multi-connector and 2-pin or 1-pin connector.
b. Remove extension before checking continuity between duty solenoid C and 1-pin connector.

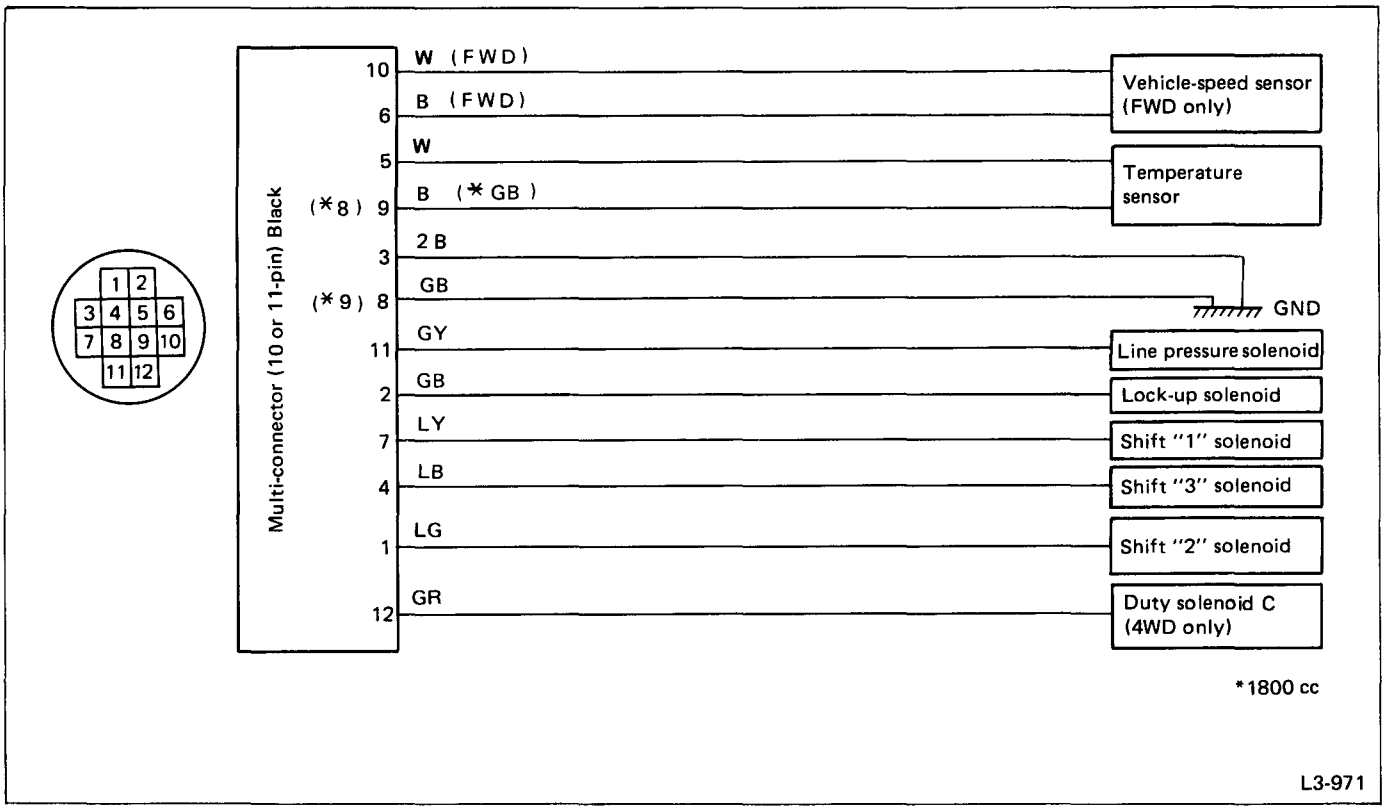

Fig. 287

- **Standard values**

Part name	Resistance (Ω)
Vehicle-revolution sensor	Approx. 600
Temperature sensor	100 – 6 k, 2.5 k/20°C (68°F)
Line-pressure solenoid	Approx. 3
Lock-up solenoid	Approx. 10
Shift solenoid 1	Approx. 25
Shift solenoid 2	Approx. 25
Shift solenoid 3	Approx. 25
Duty solenoid C	Approx. 10

If part is faulty, its resistance value will be different from the standard value indicated above.

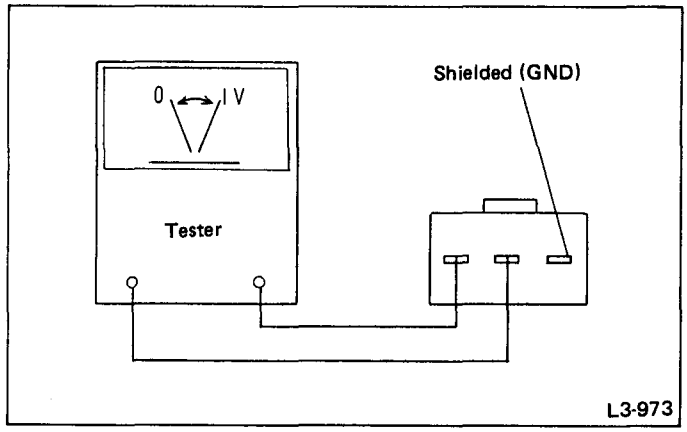

Fig. 289

8. VEHICLE REVOLUTION SENSOR

1) Disconnect connector.

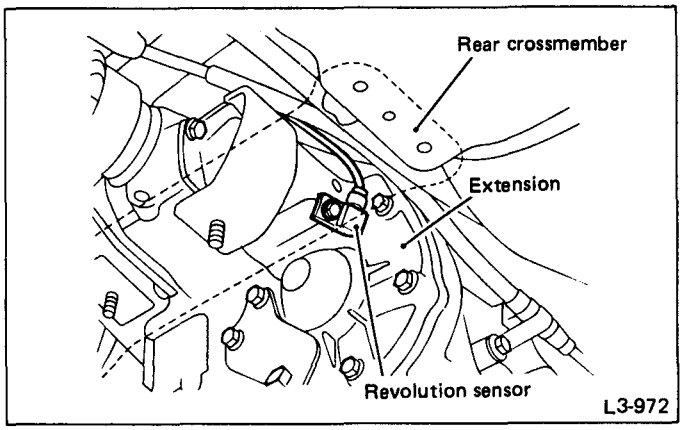

Fig. 288

2) Connect tester to connector.
3) Drive vehicle at approx. 10 km/h (6 MPH).
4) Check that tester registers approx. 1 volt.

For reference: Approx. 500 Ω resistance between revolution sensor connectors.

REMOVAL AND INSTALLATION

1. SHIFT SOLENOID, DUTY SOLENOID AND VALVE BODY

- **Removal**

1) Clean transmission exterior.
2) Drain ATF completely.

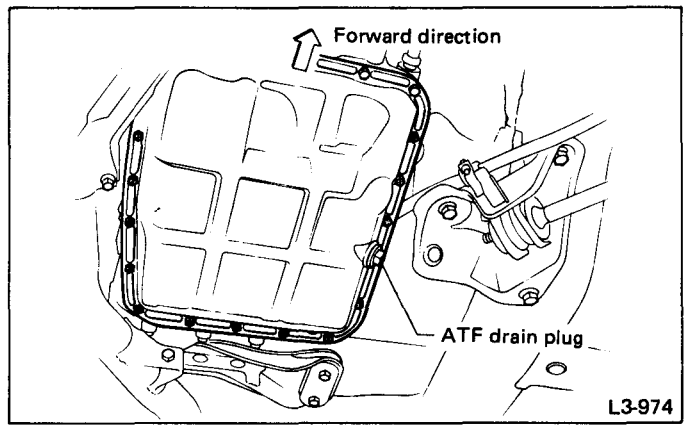

Fig. 290

Tighten ATF drain plug after draining ATF.

Tightening torque:
25 ± 2 N·m (2.5 ± 0.2 kg-m, 18.1 ± 1.4 ft-lb)

3) Remove oil pan and gasket.

Drain oil into a container

4) Disconnect solenoid valve connectors.
Remove connectors from clips and disconnect connectors at 5 places.

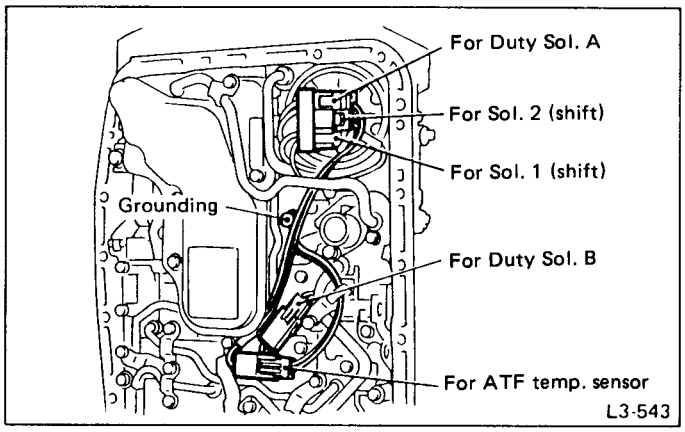

Fig. 291

5) Remove duty solenoid B.
(1) Remove the four bolts.
(2) Remove solenoid.

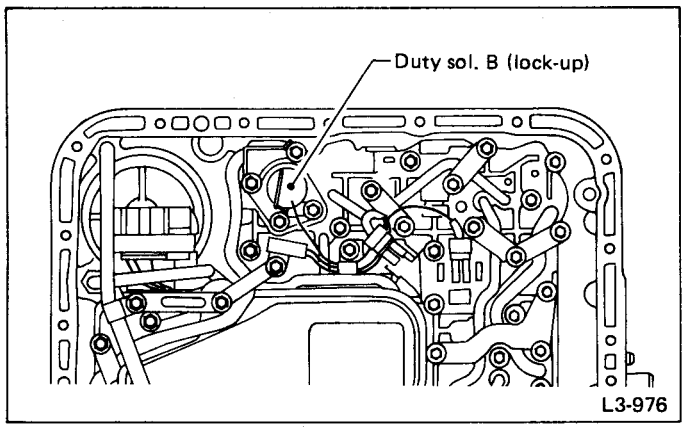

Fig. 292

6) Remove oil strainer.
(1) Disconnect oil pipe by removing the two bolts.
(2) Remove four bolts and oil strainer.

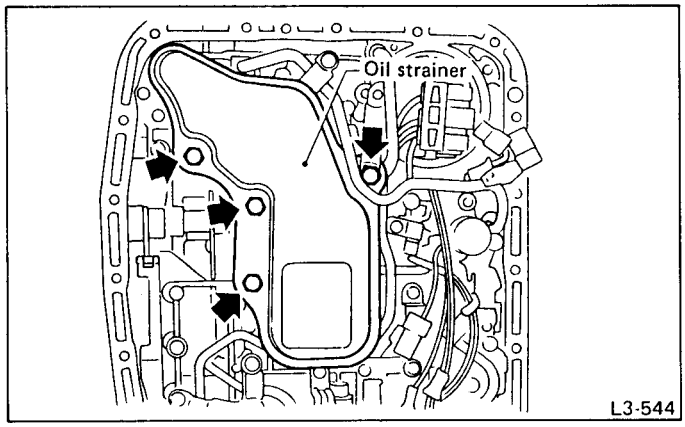

Fig. 293

Be careful because oil flows from oil strainer.

7) Remove valve body.
(1) Remove 8 long bolts (Black).
(2) Remove 11 short bolts (Yellow).

Be careful because oil flows from valve body.

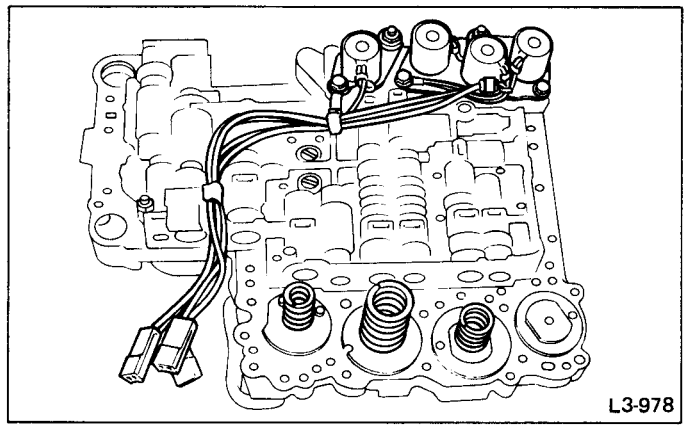

Fig. 294

8) Remove shift solenoids 1, 2, and 3, and duty solenoid A.

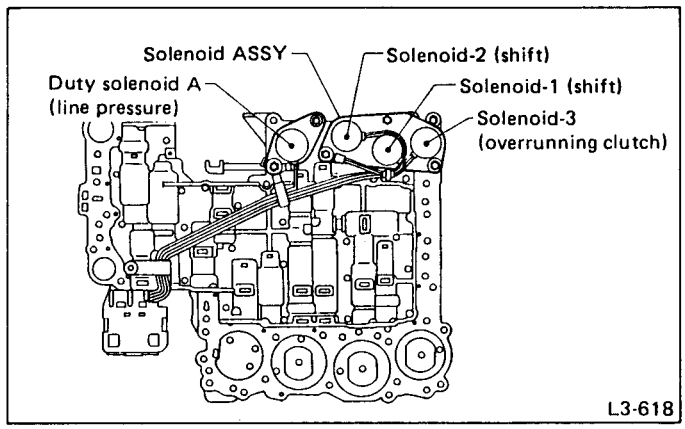

Fig. 295

• Installation

1) Install duty solenoid B (lock-up).

Tighten bolts shown by solid arrows. The two bolts and brackets shown by arrows " ⬅ " must be tightened later.

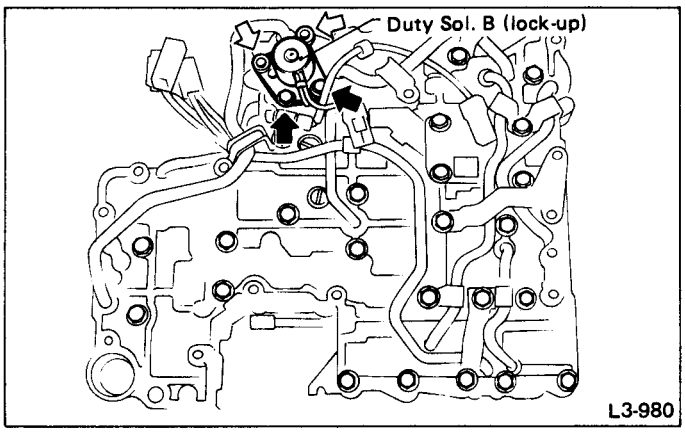

Fig. 296

2) Install solenoid valves.
   (1) Shift solenoids, 1, 2 and 3.
   (2) Duty solenoid A (line pressure).

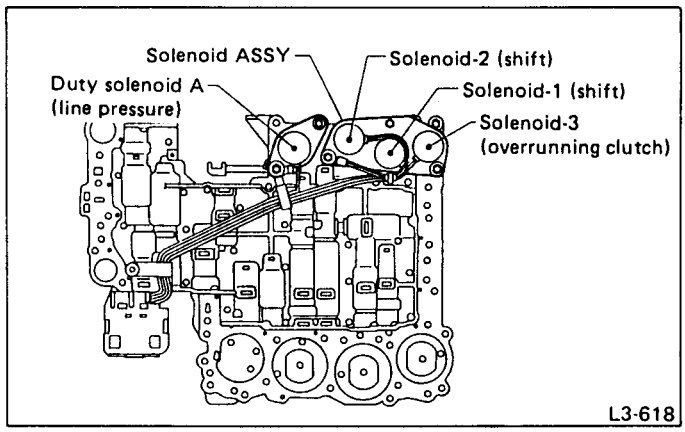

Fig. 297

3) Install valve body.

Tightening torque:
8 N·m (0.8 kg-m, 5.8 ft-lb)

- **Secure accumulator springs using vaseline.**
- **Align manual valve connections.**
- **Tighten duty solenoid B (lock-up) bracket and two bolts (also used to tighten valve body).**

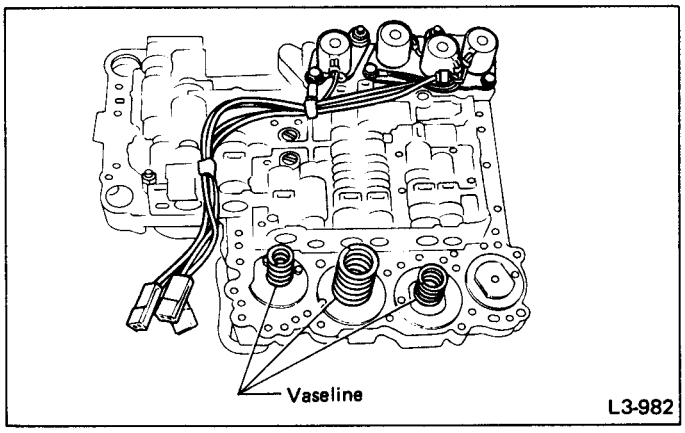

Fig. 298

4) Install oil strainer.
Also install oil pipe and harness connector bracket.

Tightening torque:
2.9 ± 0.5 N·m (0.3 ± 0.05 kg-m, 2.2 ± 0.4 ft-lb)

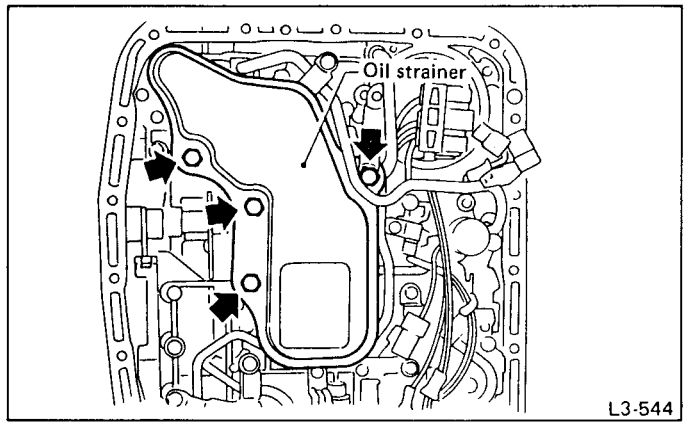

Fig. 299

5) Connect harness connectors at 5 places.
   (1) Connect connectors of same color.
   (2) Secure connectors to valve body using clips.

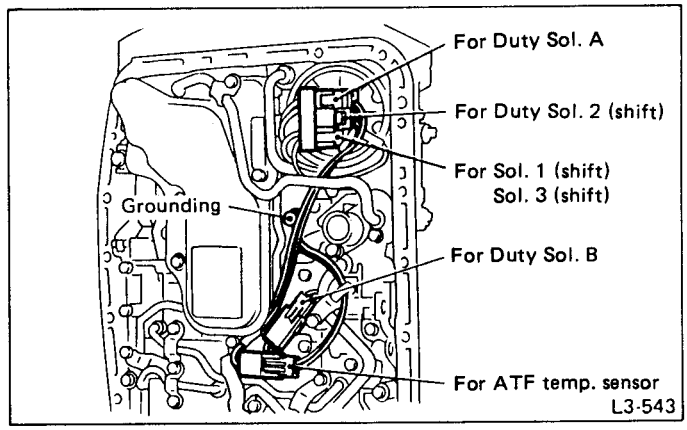

Fig. 300

6) Install oil pan & gasket.

Tightening torque:
3.9±0.5 N·m (0.4±0.05 kg-m, 2.9±0.4 ft-lb)

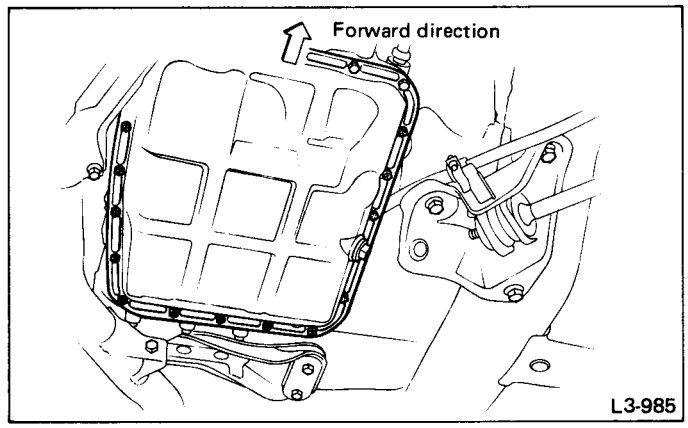

Fig. 301

7) Add and check ATF.

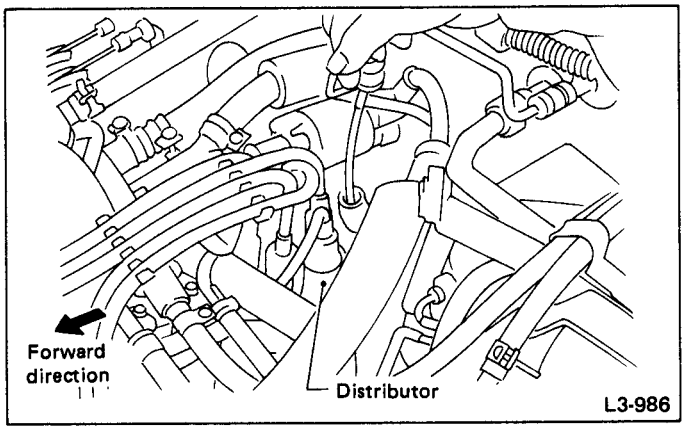

Fig. 302

2. DUTY SOLENOID C AND TRANSFER VALVE BODY

- **Removal**

1) Remove transmission pitching stopper.

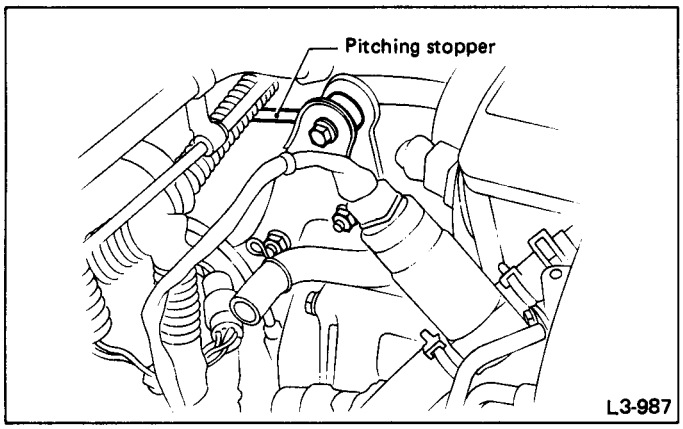

Fig. 303

2) Raise car and drain ATF.

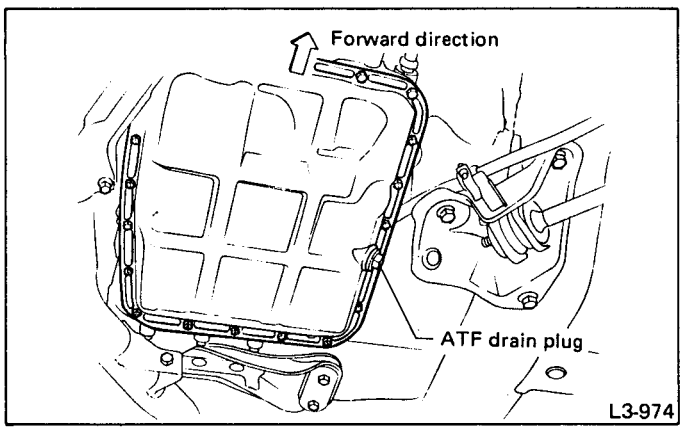

Fig. 304

3) Remove exhaust pipe (F).
   (1) Disconnect O_2 sensor connector.
   (2) Remove bolts shown by arrows in Figure.

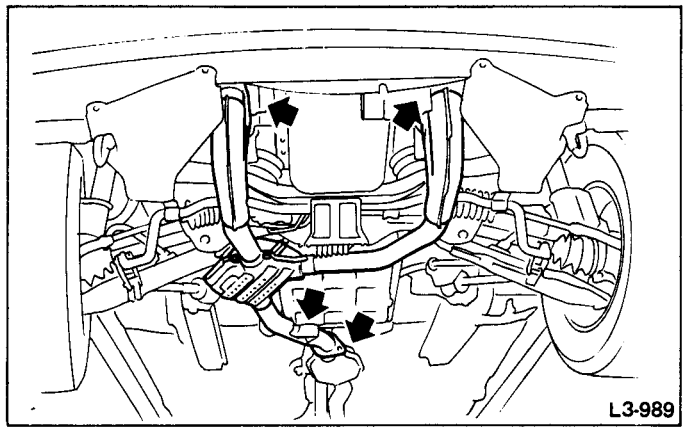

Fig. 305

4) Remove propeller shaft.

Before removing propeller shaft, scribe alignment marks on propeller shaft and rear differential coupling.

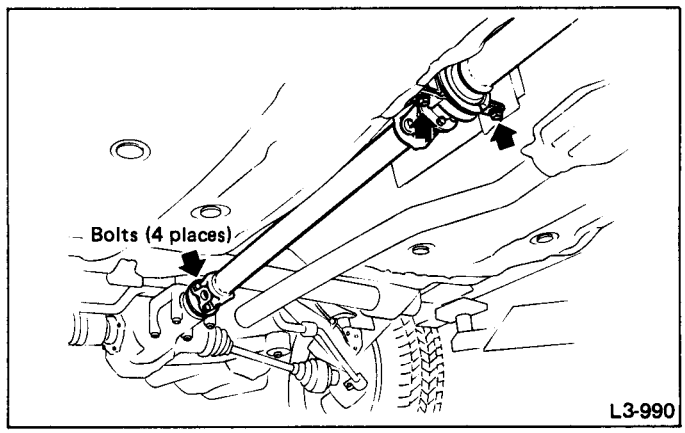

Fig. 306

5) Remove rear crossmember.
   (1) Support transmission using a transmission jack and raise slightly.
   (2) Remove bolts and nuts as shown in Figure.

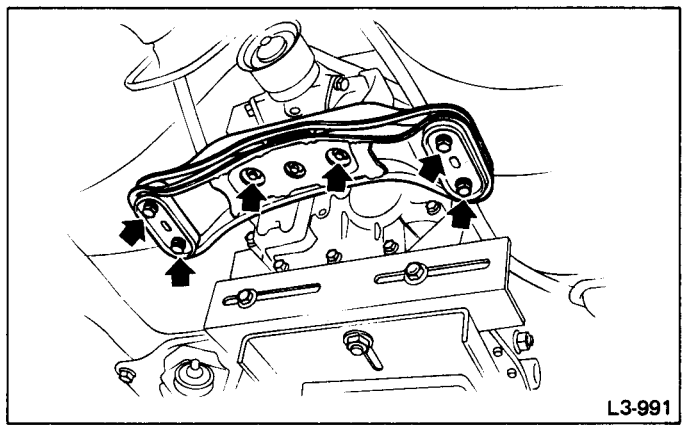

Fig. 307

6) Remove revolution sensor.

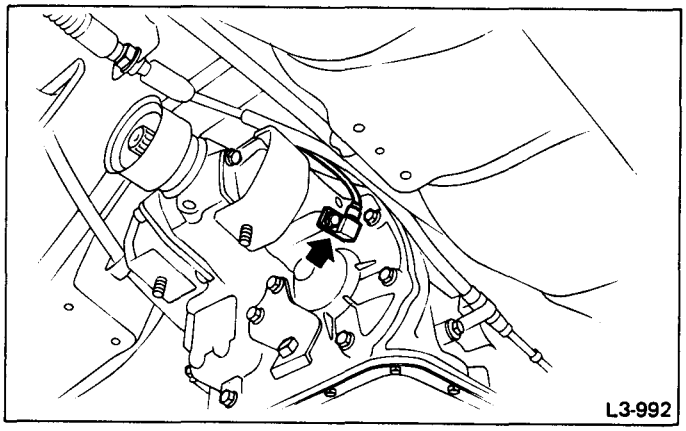

Fig. 308

7) Remove extension & gasket.
   (1) Remove gear select cable nut.
   (2) Move gear select cable so that extension bolts can be removed.

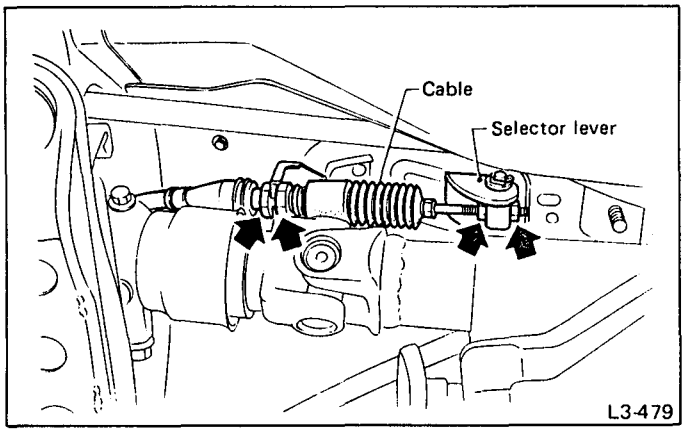

Fig. 309

   (3) Remove bolts.
   (4) Remove extension and disconnect duty solenoid C connector.

a. Use a container to catch oil flowing from extension.
b. Do not force extension back before disconnecting solenoid connector. Otherwise, harness may be damaged.

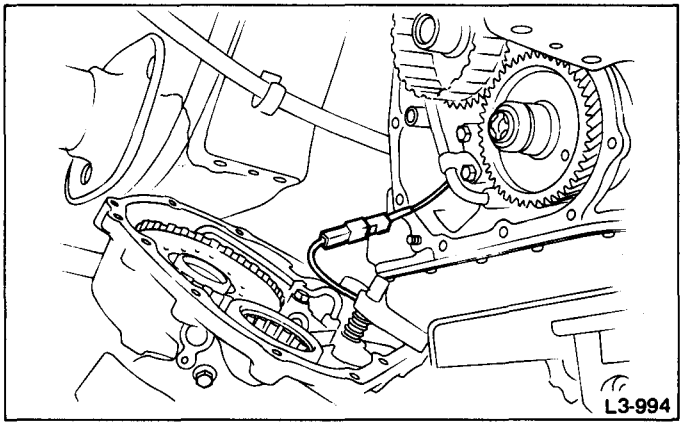

Fig. 310

8) Remove duty solenoid C & transfer valve body from extension.
   (1) Remove transfer clutch drum.

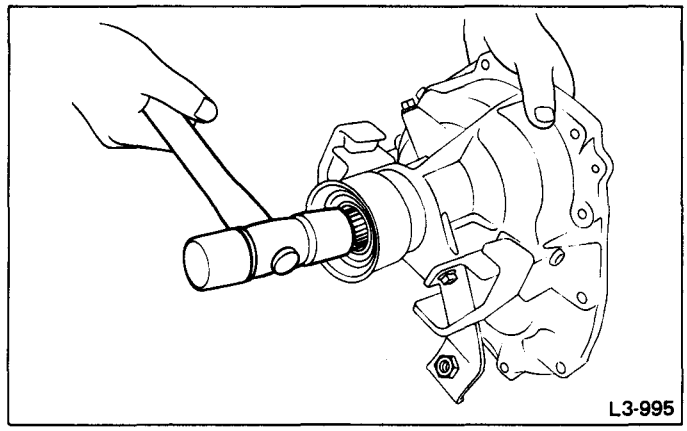

Fig. 311

   (2) Remove clamp which secures pipe.
   (3) Remove bolts.

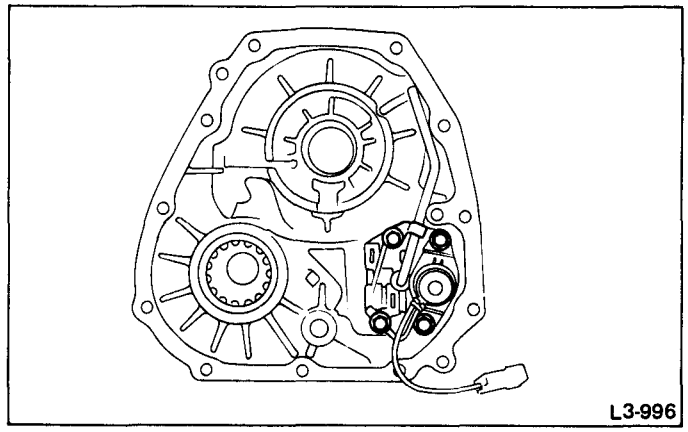

Fig. 312

• Installation

1) Install duty solenoid C & transfer valve body.
   (1) Install duty solenoid C & transfer valve body.
   (2) Install pipe and clamp.

Tightening torque:
8 ± 1 N·m (0.8 ± 0.1 kg-m, 5.8 ± 0.7 ft-lb)

(3) Install clutch drum.

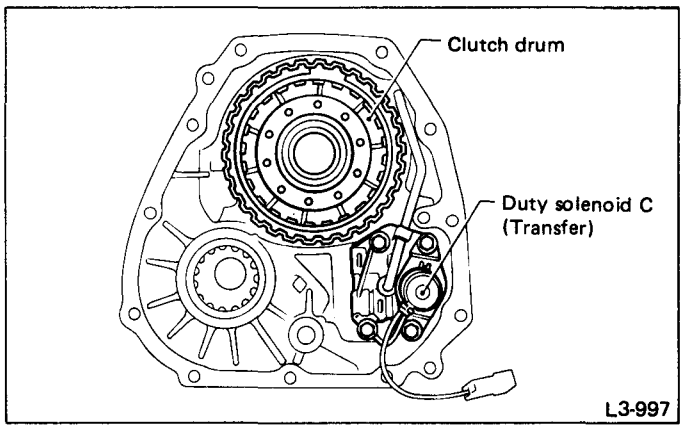

Fig. 313

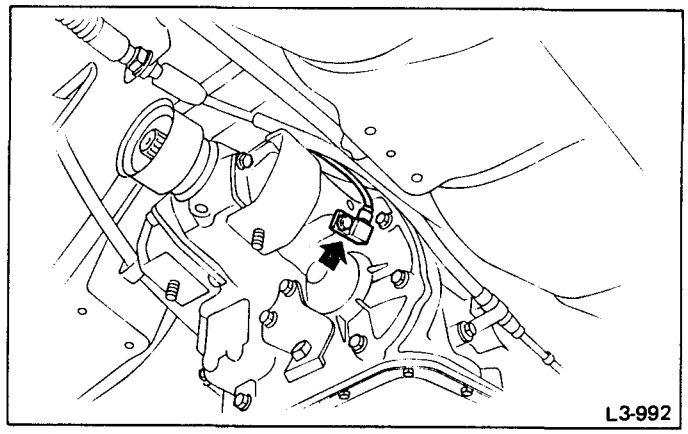

Fig. 315

2) Install extension.
   (1) Connect connector.
   (2) Tighten 11 bolts.

Tightening torque:
25 N·m (2.5 kg-m, 18 ft-lb)

(3) Connect gear shift cable.

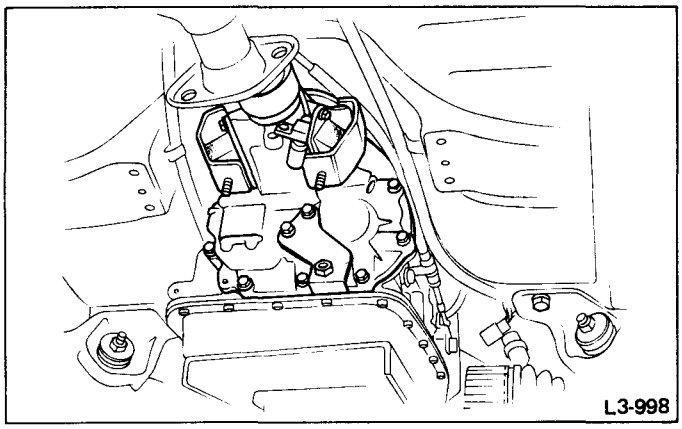

Fig. 314

3) Install revolution sensor.

Tightening torque:
8 N·m (0.8 kg-m, 5.8 ft-lb)

4) Install rear crossmember.
   (1) Tighten bolts.

Tightening torque:
37 ± 10 N·m (3.8 ± 1.0 kg-m, 27 ± 7 ft-lb)

(2) Lower and remove transmission jack.

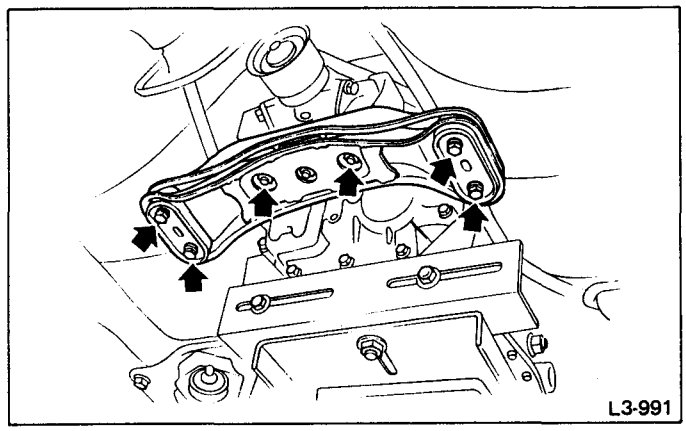

Fig. 316

5) Install propeller shaft.

Tightening torque:
N·m (kg-m, ft-lb)
A 21.1 ± 3.4 (2.15 ± 0.35, 15.6 ± 2.5)
B 39 ± 10 (4.0 ± 1.0, 29 ± 7)

Align marks on propeller shaft and rear differential coupling.

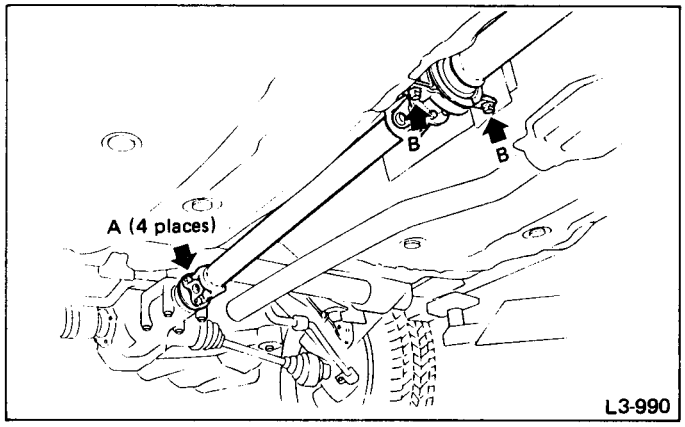

Fig. 317

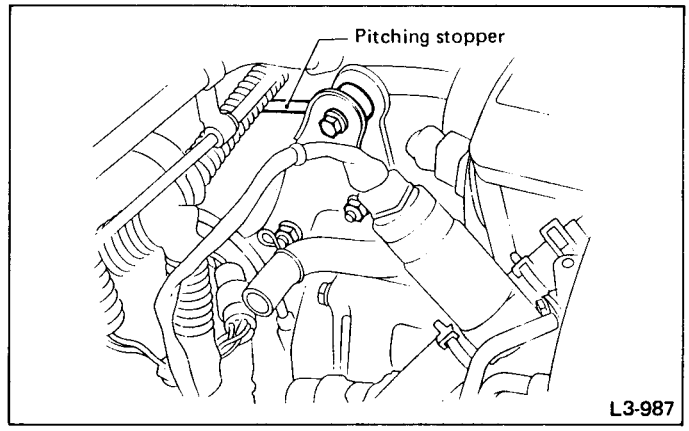

Fig. 319

6) Install exhaust pipe F.

Tightening torque:
N·m (kg-m, ft-lb)
C 27 ± 7 (2.8 ± 0.7, 20.3 ± 5.1)
D 29 ± 5 (3.0 ± 0.5, 21.7 ± 3.6)
E 14 ± 4 (1.4 ± 0.4, 10.1 ± 2.9)

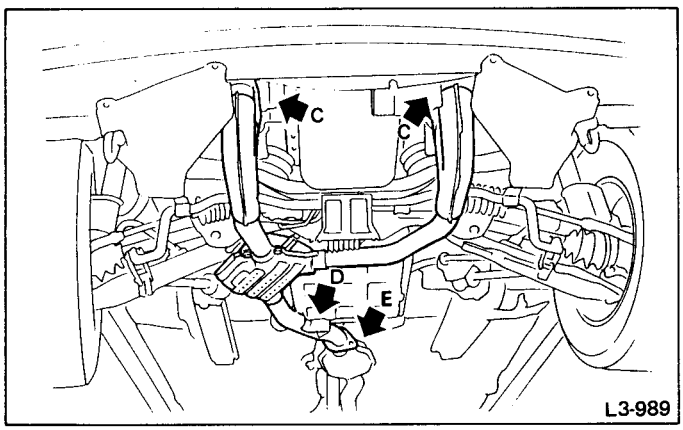

Fig. 318

7) Lower and remove jack.
8) Connect the following parts:
   (1) O_2 sensor connector
   (2) Revolution sensor connector
   (3) Multi-connector
9) Install transmission pitching stopper.

Tightening torque:
N·m (kg-m, ft-lb)
52 ± 15 (5.3 ± 1.5, 38 ± 11) (Body side)
49 ± 5 (5.0 ± 0.5, 36.2 ± 3.6) (Engine side)

10) Replenish ATF and check oil level. Check for leaks.

5 Performance Test

- NECESSARY TEST GAUGES

1) Tachometer (It is desirable to be able to read to 50 rpm.)
2) Vacuum gauge (It is used for measuring intake manifold vacuum.)
3) OIL PRESSURE GAUGE (398573600).
4) OIL PRESSURE ADAPTER (498897100).
5) Stop watch.

1. STALL TEST

The stall test is of extreme importance in diagnosing the condition of the automatic transmission and the engine. It should be conducted to measure the engine stall speeds in all shift ranges except the P and N ranges.

Purposes of the stall test

1) To check the operation of the automatic transmission clutch and brake band.
2) To check the operation of the torque converter.
3) To check engine performance.

Test Methods

- **Preparations before test**

① Check that throttle valve opens fully.
② Check that engine oil level is correct.
③ Check that coolant level is correct.
④ Check that ATF level is correct.
⑤ Check that differential gear oil level is correct.
⑥ Increase ATF temperature to 60 – 80°C (140 – 176°F) by idling the engine for approximately 30 minutes (with select lever set to "N" or "P").

1) Install an engine tachometer at a location visible from the driver's compartment and mark the stall speed range on the tachometer scale.
2) Place the wheel chocks at the front and rear of all wheels and engage the parking brake.

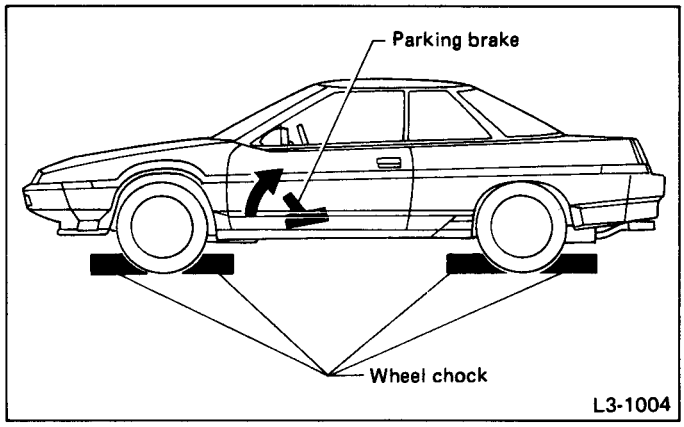

Fig. 320

3) Move the manual linkage to ensure it operates properly, and shift the select lever to the D range.
4) While forcibly depressing the foot brake pedal, gradually depress the accelerator pedal until the engine operates at full throttle.

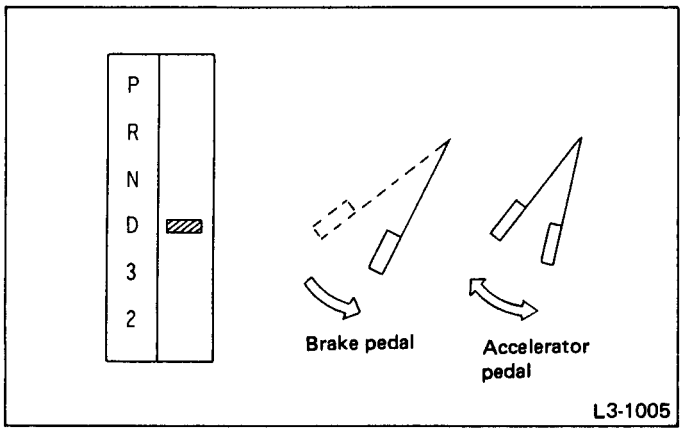

Fig. 335 Stall test

5) When the engine speed is stabilized, read that speed quickly and release the accelerator pedal.
6) Shift the select lever to Neutral, and cool down the engine by idling it for more than one minute.
7) Record the stall speed.
8) Perform the stall tests with the select lever in the 3, 2 and R ranges.

a. Do not continue the stall test for MORE THAN FIVE SECONDS at a time (from closed throttle, fully open throttle to stall speed reading). Failure to follow this instruction causes the engine oil and ATF to deteriorate and the clutch and brake band to be adversely affected.
Be sure to cool down the engine for at least one minute after each stall test with the select lever set in the P or N range and with the idle speed lower than 1,200 rpm.
b. If the stall speed is higher than the specified range, attempt to finish the stall test in as short a time as possible, in order to prevent the automatic transmission from sustaining damage.

Stall speed (at sea level):
1800 cc
2,450 – 2,850 rpm
2700 cc
2,400 – 2,800 rpm

Interpretation of stall test results

Stall speed (at sea level)	Assessment	Cause	Remarks
Higher than 2,850 rpm (1800 cc) or 2,800 rpm (2700 cc)	Slippage of automatic transmission clutch, brake band, etc. (Further stall tests are not necessary.)	• Low line pressure (If stall speed is higher than specified range at any shift position). • One-way clutch slippage. (If stall speed is higher than specified range only in the D range.) • Slippage of Forward clutch. (If stall speed is higher than specified range in D, 3, 2, 1ST Hold range. • *1: Slippage of low & reverse brake or reverse clutch. (If stall speed is higher than specified range only in the R range.)	*1: Slippage of reverse clutch/ low & reverse brake can be judged by road tests. If engine compression can be used as a brake with select lever in the 1 range, reverse clutch is slipping; if it cannot be used, low & reverse brake is slipping.
2,450 – 2,850 rpm (1800 cc) or 2,400 – 2,800 rpm (2700 cc)	• Control members are in good order in the D, 3, 2 and R ranges. • Engine in good order.		• One-way clutch can be checked for condition by road tests.**
Lower than 2,450 rpm (1800 cc) or 2,400 rpm (2700 cc)	• Throttle not fully opened. • Erroneous engine operation or torque converter one-way clutch slippage.		
** Road test	• Acceleration is not properly made up to 50 km/h (31 MPH). • Car speed does not attain more than 80 km/h (50 MPH). • Operation is not proper at all car speeds.	One-way clutch slippage. *3: One-way clutch jamming. Erroneous engine operation.	*3: Abnormal temperature rise occurs.

2. TIME LAG TEST

If the shift lever is shifted while the engine is idling, there will be a certain time elapse or lag before the shock can be felt. This is used for checking the condition of the forward clutch, reverse clutch, low & reverse brake, forward one-way clutch and low one-way clutch

CAUTION:
(a) Perform the test at normal operation fluid temperature (50 to 80°C or 122 to 176°F).
(b) Be sure to allow a one minute interval between tests.
(c) Make three measurements and take the average value.

Measure time lag

1) Fully apply the parking brake.
2) Start the engine.

Check idling speed (A/C OFF)

"N" range: 1800: 800 ± 100 rpm
2700: 750 ± 100 rpm

3) Shift the shift lever from "N" to "D" range.

Using a stop watch, measure the time it takes from shifting the lever until the shock is felt.

Time lag: Less than 1.2 seconds

4) In same manner, measure the time lag for "N" → "R".

Time lag: Less than 1.5 seconds

Evaluation

1) If "N" → "D" time lag is longer than specified:
   - Line pressure too low
   - Forward clutch worn
   - Low one-way clutch not operating properly
2) If "N" → "R" time lag is longer than specified:
   - Line pressure too low
   - Reverse clutch worn
   - Low & Rev. clutch worn

3. LINE PRESSURE TEST

If the clutch or the brake band shows a sign of slippage or shifting sensation is not correct, the line pressure should be checked.

- Excessive shocks during upshifting or shifting takes place at a higher point than under normal circumstances, may be due to the line pressure being too high.
- Slippage or inability to operate the car may, in most cases, be due to loss of oil pressure for the operation of the clutch, brake band or control valve.

1) Line pressure measurement (under no load)

a. Before measuring line pressure, jack-up front wheels (front-wheel-drive model) or all wheels (4-wheel drive model).
b. Maintain temperature of ATF at approximately 60 to 80°C (140 to 176°F) during measurement.
(ATF will reach the above temperature after idling the engine for approximately 30 minutes with shift lever in "N" or "P".)

2) Line pressure measurement (under heavy load)

a. Before measuring line pressure, apply both foot and parking brakes with all wheels chocked (Same as for "stall" test conditions).
b. Measure line pressure for 5 to 10 seconds. Before measuring it again, idle the engine for 2 to 5 minutes.
c. Before measuring line pressure, always shift the lever from "D" to "2".
d. Maintain the temperature of ATF at approximately 60 to 80°C (140 to 176°F) during measurement. (ATF will reach the above temperature after idling the engine for approximately 30 minutes with the shift lever in "N" or "P".)

Measuring the line pressure

1) Temporarily attach the OIL PRESSURE GAUGE (398573600) to a suitable place in the driver's compartment, remove the blind plug located in front of the toeboard and pass the hose of the GAUGE (398573600) to the engine compartment.

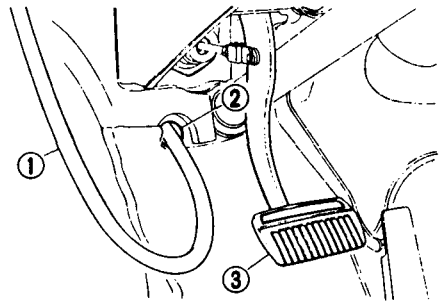

1 Pressure gauge hose
2 Hole in toe board (blank cap hole)
3 Brake pedal

A13-223

Fig. 322

2) Remove the test plug and install OIL PRESSURE GAUGE ADAPTER (498897100) instead.

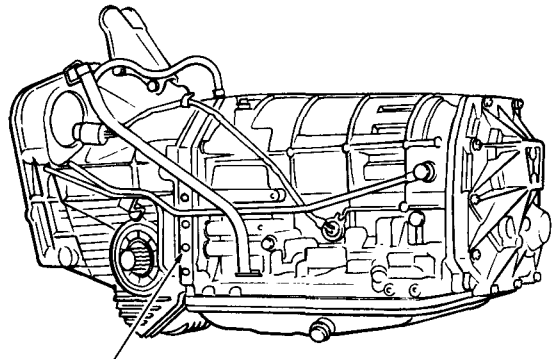

L3-1006

Fig. 323

3) Start the engine and warm it up by driving the car for at least 10 to 15 minutes.
4) Stop the engine. Connect the OIL PRESSURE ADAPTER (498897100) and the tip end of the GAUGE (398573600).
5) Check line pressure in accordance with the following chart.

< Standard line pressure >

Unit: kPa (kg/cm^2, psi)

Range	Min. line pressure 600 – 800 rpm	Max. line pressure Stall rpm
P	441 – 569 (4.5 – 5.8, 64 – 82)	–
R	588 – 686 (6.0 – 7.0, 85 – 100)	1,422 – 1,589 (14.5 – 16.2, 206 – 230)
N	441 – 569 (4.5 – 5.8, 64 – 82)	–
D	441 – 569 (4.5 – 5.8, 64 – 82)	1,128 – 1,255 (11.5 – 12.8, 164 – 182)
3	441 – 569 (4.5 – 5.8, 64 – 82)	1,128 – 1,255 (11.5 – 12.8, 164 – 182)
2	441 – 569 (4.5 – 5.8, 64 – 82)	1,128 – 1,255 (11.5 – 12.8, 164 – 182)
Accelerator pedal	Fully-closed	Fully-open

Measuring transfer clutch pressure

Check transfer clutch pressure in accordance with the following chart in the same manner as with line pressure.

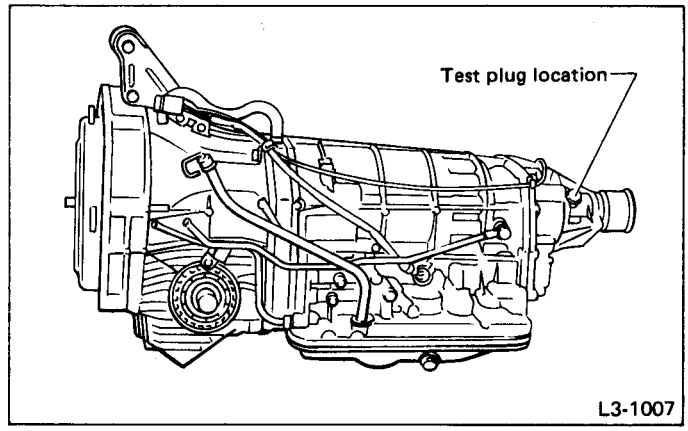

Fig. 324

Unit: kPa (kg/cm^2, psi)

Range	4WD mode Low pressure side 600 – 800 rpm	4WD mode High pressure side Stall rpm	FWD mode High pressure side Stall rpm
R	49 – 78 (0.5 – 0.8, 7 – 11)	716 – 785 (7.3 – 8.0, 104 – 114)	0 (0, 0)
D	49 – 78 (0.5 – 0.8, 7 – 11)	716 – 785 (7.3 – 8.0, 104 – 114)	0 (0, 0)
Accelerator pedal	Fully-closed	Fully-open	Fully-open

If oil pressure is not produced or if it does not change in the 4WD mode, the duty solenoid C or transfer valve assembly may be malfunctioning. If oil pressure is produced in the FWD mode, the problem is similar to that in the 4WD mode.

4. ROAD TEST

Road tests should be conducted to properly diagnose the condition of the automatic transmission.

When performing test, do not exceed posted speed limit.

Speed change characteristics

The standard speed change characteristics are indicated in the following table.

1800 cc

		Throttle fully-open km/h (MPH)					
		1 → 2	2 → 3	3 → 4	4 → 3	3 → 2	2 → 1
D range	NORMAL	50±2.5 (31±2)	94±2.5 (58±2)	144±2.5 (89±2)	134±2.5 (83±2)	84±2.5 (52±2)	40±2.5 (25±2)
	POWER	56±2.5 (35±2)	104±2.5 (65±2)	155±2.5 (96±2)	145±2.5 (90±2)	94±2.5 (58±2)	45±2.5 (28±2)
3 range		56±2.5 (35±2)	104±2.5 (65±2)	–	–	94±2.5 (58±2)	45±2.5 (28±2)
2 range	1st hold S/W OFF	56±2.5 (35±2)	104±2.5 (65±2)	–	–	94±2.5 (58±2)	45±2.5 (28±2)
	1st hold S/W ON	56±2.5 (35±2)	104±2.5 (65±2)	–	–	94±2.5 (58±2)	50±2.5 (31±2)

		Throttle fully-closed km/h (MPH)					
		1 → 2	2 → 3	3 → 4	4 → 3	3 → 2	2 → 1
D range	NORMAL	15±2.5 (9±2)	30±2.5 (19±2)	45±2.5 (28±2)	40±2.5 (25±2)	15±2.5 (9±2)	10±2.5 (6±2)
	POWER	15±2.5 (9±2)	30±2.5 (19±2)	50±2.5 (31±2)	40±2.5 (25±2)	20±2.5 (12±2)	10±2.5 (6±2)
3 range		15±2.5 (9±2)	30±2.5 (19±2)	–	–	20±2.5 (12±2)	10±2.5 (6±2)
2 range	1st hold S/W OFF	15±2.5 (9±2)	104±2.5 (65±2)	–	–	94±2.5 (58±2)	10±2.5 (6±2)
	1st hold S/W ON	56±2.5 (35±2)	104±2.5 (65±2)	–	–	94±2.5 (58±2)	50±2.5 (31±2)

2700 cc

		Throttle fully-open km/h (MPH)					
		1 → 2	2 → 3	3 → 4	4 → 3	3 → 2	2 → 1
D range	NORMAL	55±2.5 (34±2)	107±2.5 (66±2)	165±2.5 (103±2)	156±2.5 (97±2)	98±2.5 (61±2)	45±2.5 (28±2)
	POWER	55±2.5 (34±2)	107±2.5 (66±2)	165±2.5 (103±2)	156±2.5 (97±2)	98±2.5 (61±2)	45±2.5 (28±2)
3 range		55±2.5 (34±2)	107±2.5 (66±2)	–	–	98±2.5 (61±2)	45±2.5 (28±2)
2 range	1st hold S/W OFF	55±2.5 (34±2)	105±2.5 (65±2)	–	–	100±2.5 (62±2)	45±2.5 (28±2)
	1st hold S/W ON	57±2.5 (35±2)	105±2.5 (65±2)	–	–	100±2.5 (62±2)	40±2.5 (25±2)

		Throttle fully-closed km/h (MPH)					
		1 → 2	2 → 3	3 → 4	4 → 3	3 → 2	2 → 1
D range	NORMAL	13±2.5 (8±2)	18±2.5 (11±2)	38±2.5 (24±2)	33±2.5 (21±2)	15±2.5 (9±2)	10±2.5 (6±2)
	POWER	17±2.5 (11±2)	30±2.5 (19±2)	55±2.5 (34±2)	40±2.5 (25±2)	20±2.5 (12±2)	10±2.5 (6±2)
3 range		17±2.5 (11±2)	30±2.5 (19±2)	–	–	20±2.5 (12±2)	10±2.5 (6±2)
2 range	1st hold S/W OFF	17±2.5 (11±2)	105±2.5 (65±2)	–	–	100±2.5 (62±2)	10±2.5 (6±2)
	1st hold S/W ON	57±2.5 (35±2)	105±2.5 (65±2)	–	–	100±2.5 (62±2)	40±2.5 (25±2)

Shift characteristics

Pay careful attention to ensure the shift is made smoothly at the proper car speed at which shifting begins.

1) Shifting shocks are encountered or smooth shifting does not occur.

2) Shifting occurs slowly in response to the condition of the engine throttle.

The above two problems are due to incorrect line pressure or other factors involved in line pressure.

Checking for shift patterns

1) In the D range, shifting should be made as $D_1 \rightarrow D_2 \rightarrow D_3 \rightarrow D_4$ smoothly and vice versa; it should not be made in the R range.

2) Kick down should activate properly.

3) When the select lever is shifted from the D range to the 3 or 2 range, shifting should be made as 3 → 2 → 1. Engine compression can be utilized as a brake at 2 and 1st hold range.

4) With the shift lever in the 2 range, shifting should be made as 1 → 2 → 3 smoothly.

5) When pushing 1st hold switch, shifting should be made as 1 → 2 or 3 → 2 → 1.

6) The select lever should be locked when placed in the P range.

In road tests, if any abnormality is noticed, it is necessary to adjust the brake band. If by inspection the brake band is in good order, check the servo piston for any sign of oil leakage from the seal.

AUTOMATIC SHIFT CHARACTERISTICS

1800 cc

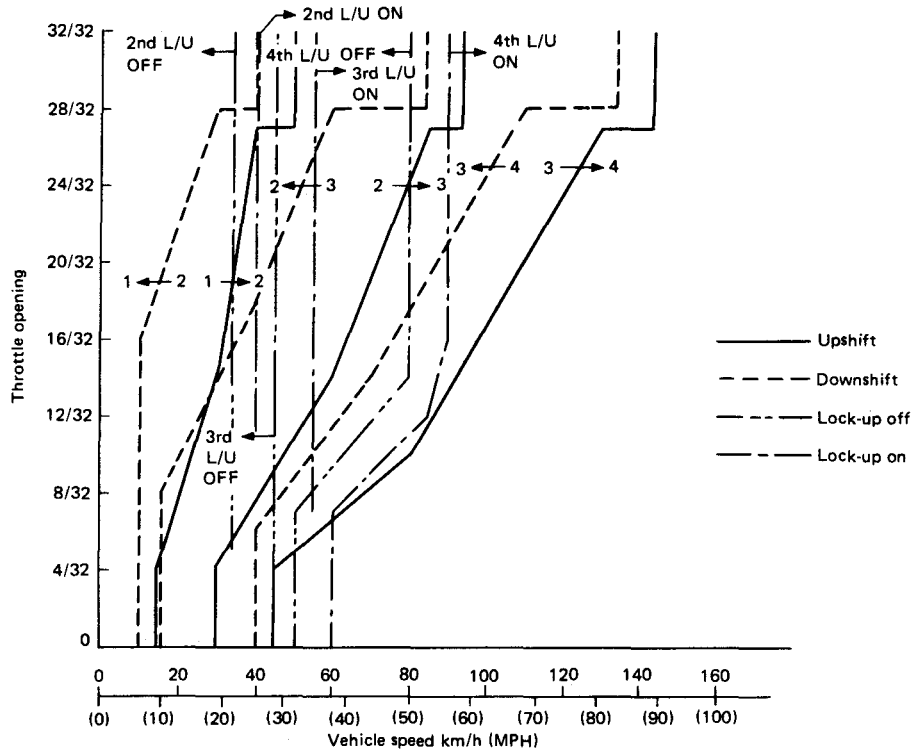

Fig. 325 "D" range (Normal pattern)

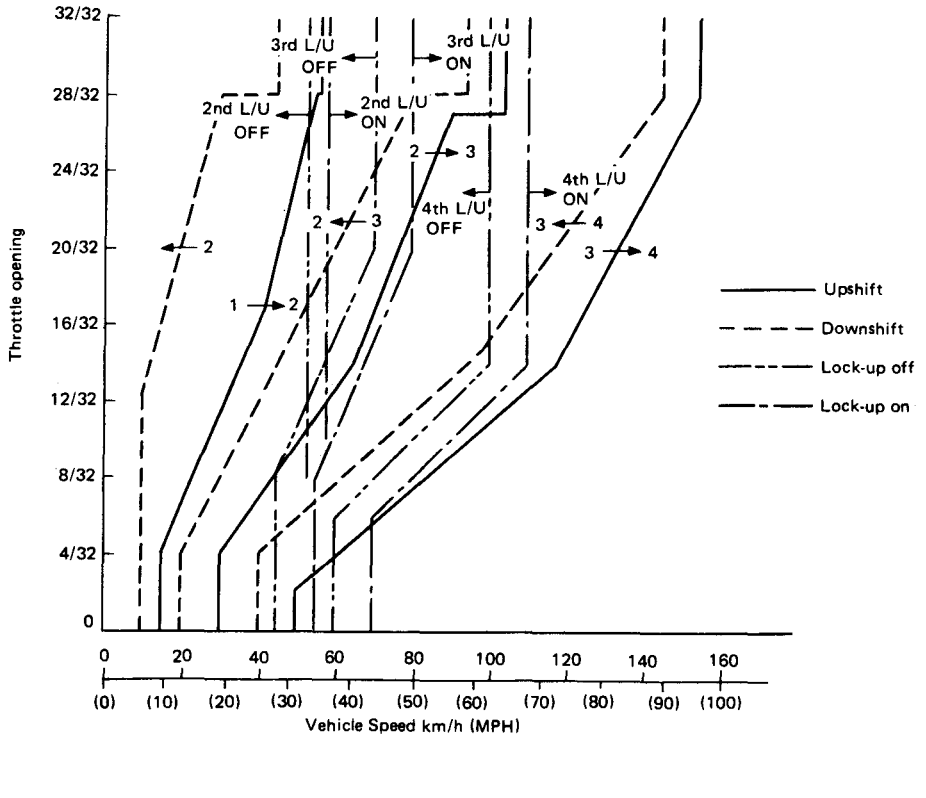

Fig. 326 "D" range (Power pattern)

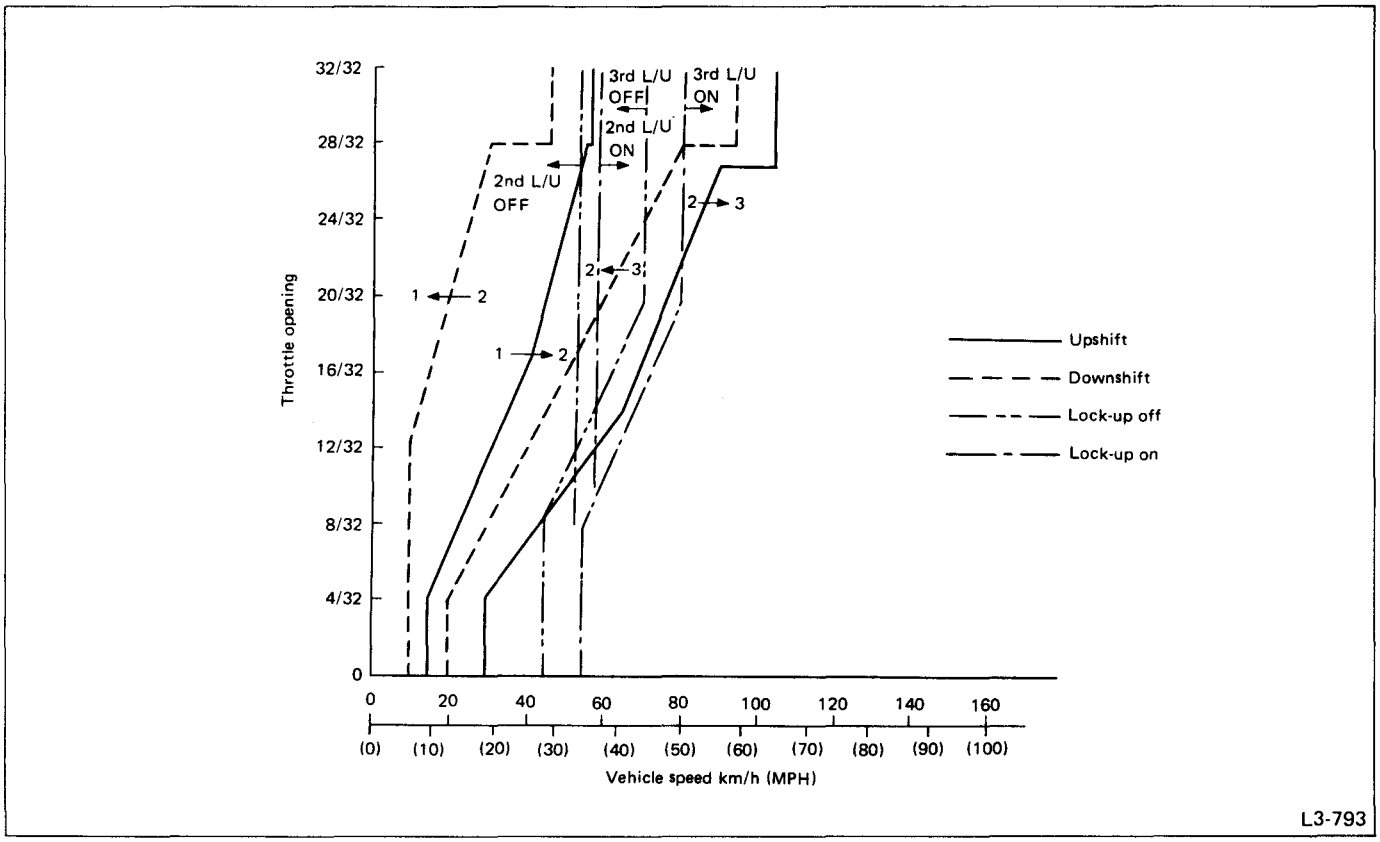

Fig. 327 "3" range

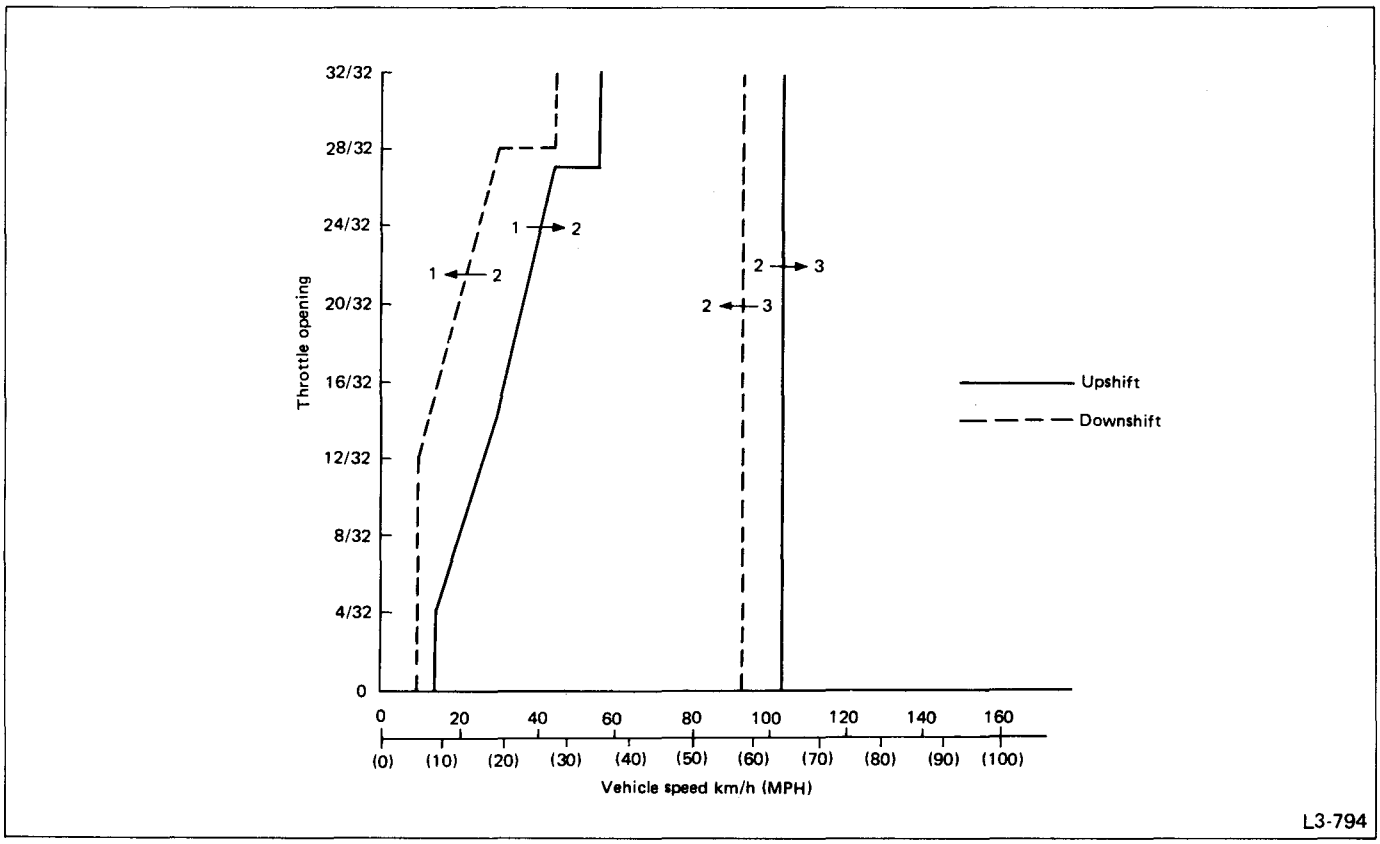

Fig. 328 "2" range (1st hold switch OFF)

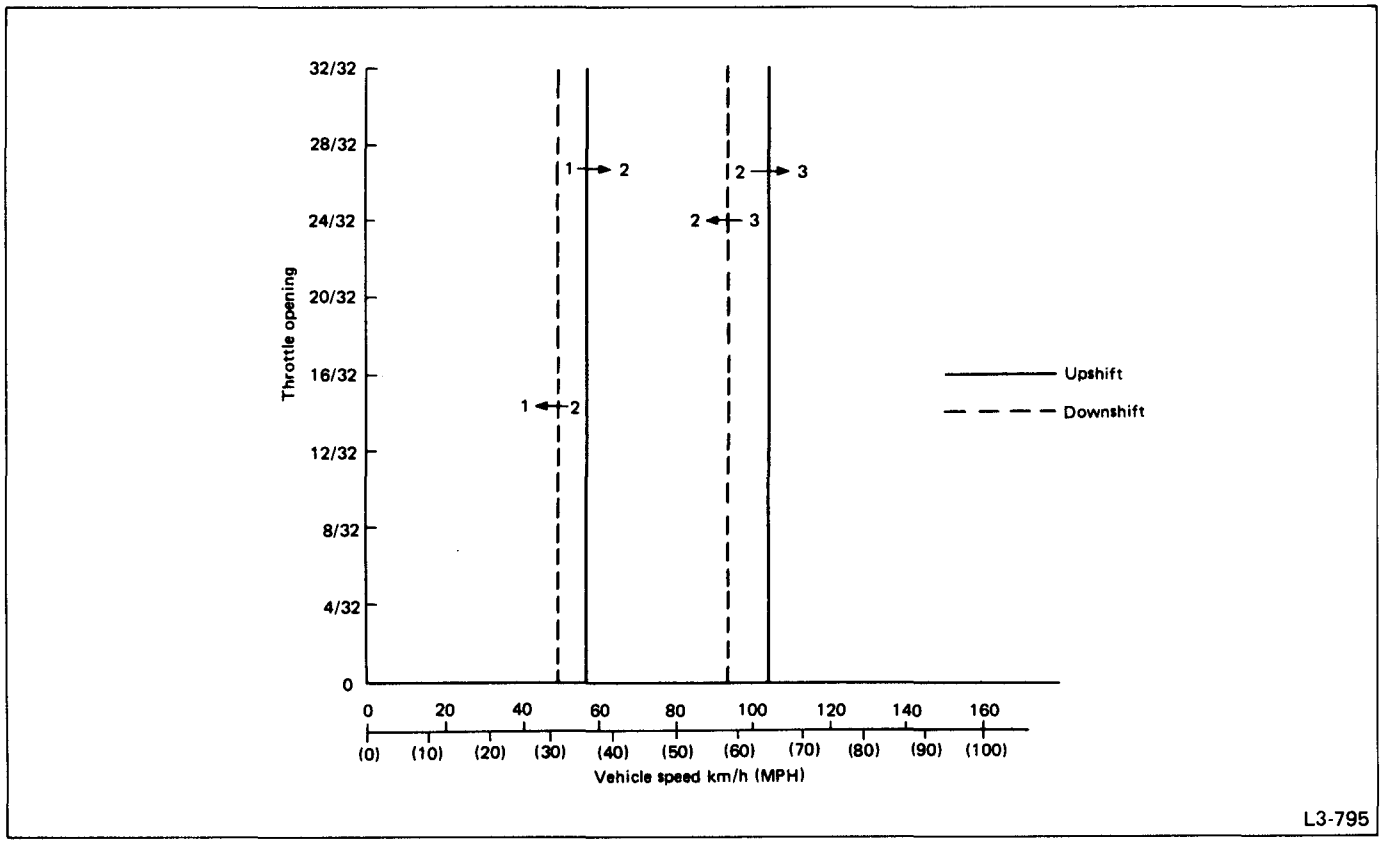

Fig. 329 "2" range (1st hold switch ON)

2700 cc

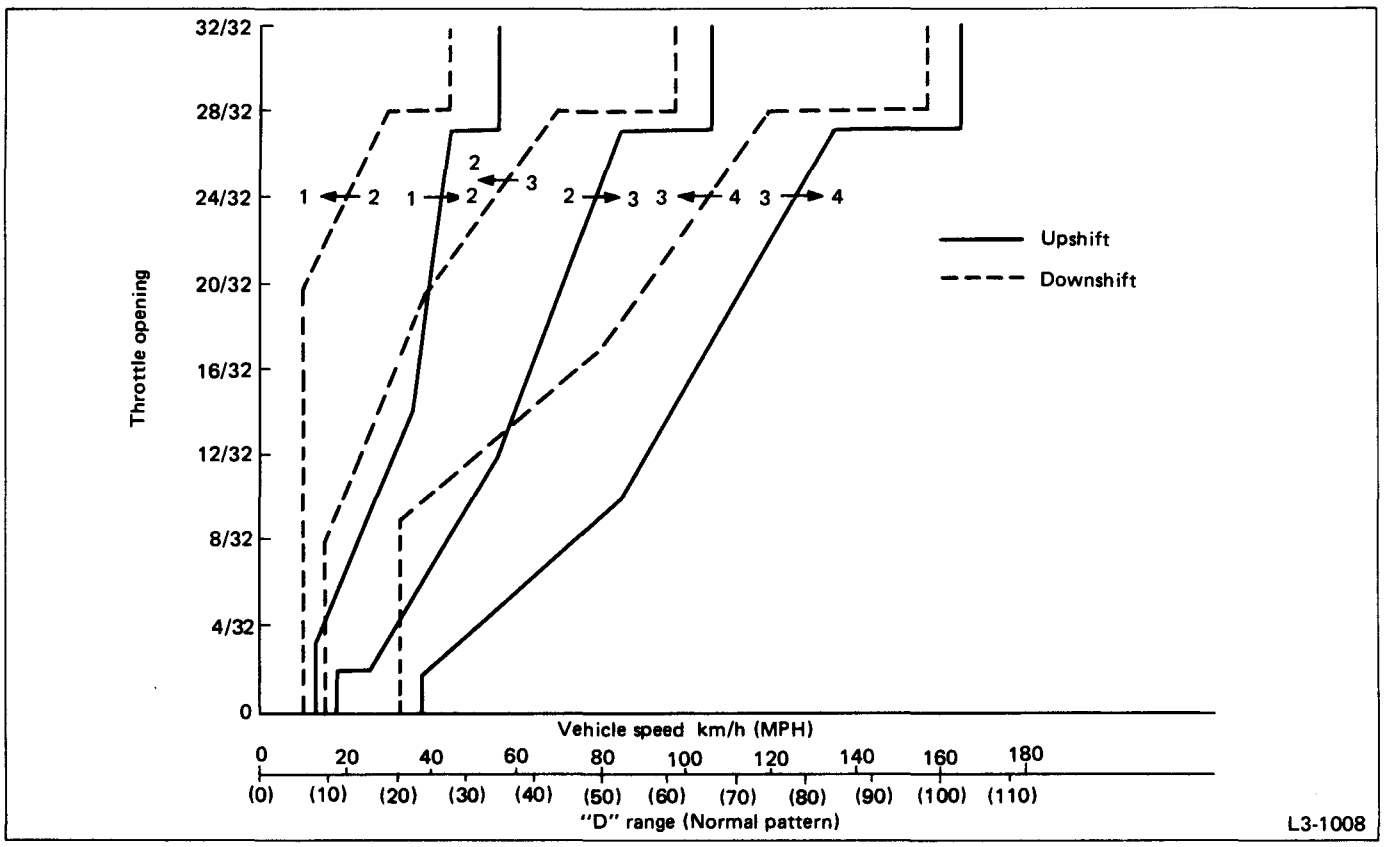

Fig. 330 "D" range (Normal pattern)

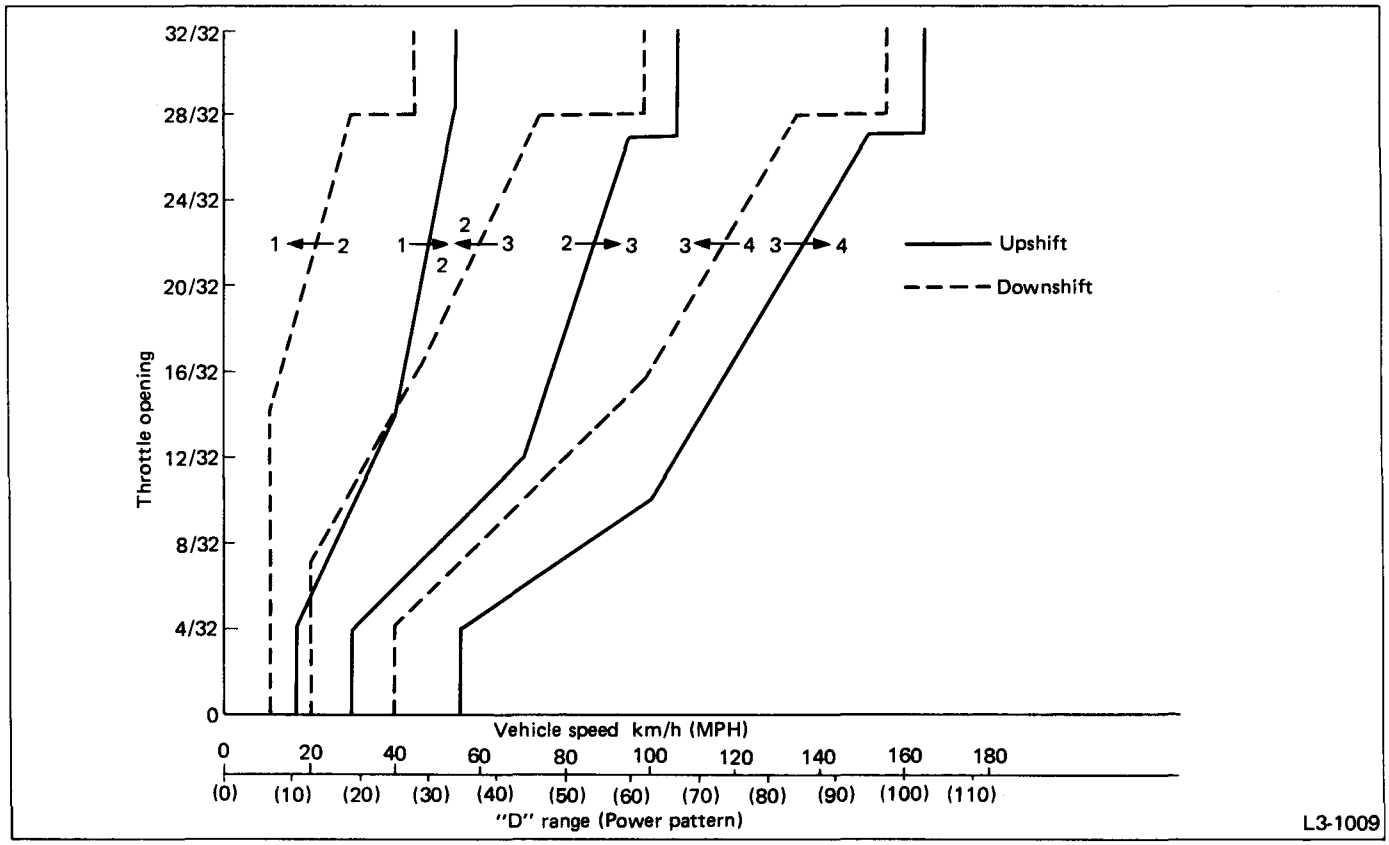

Fig. 331 "D" range (Power pattern)

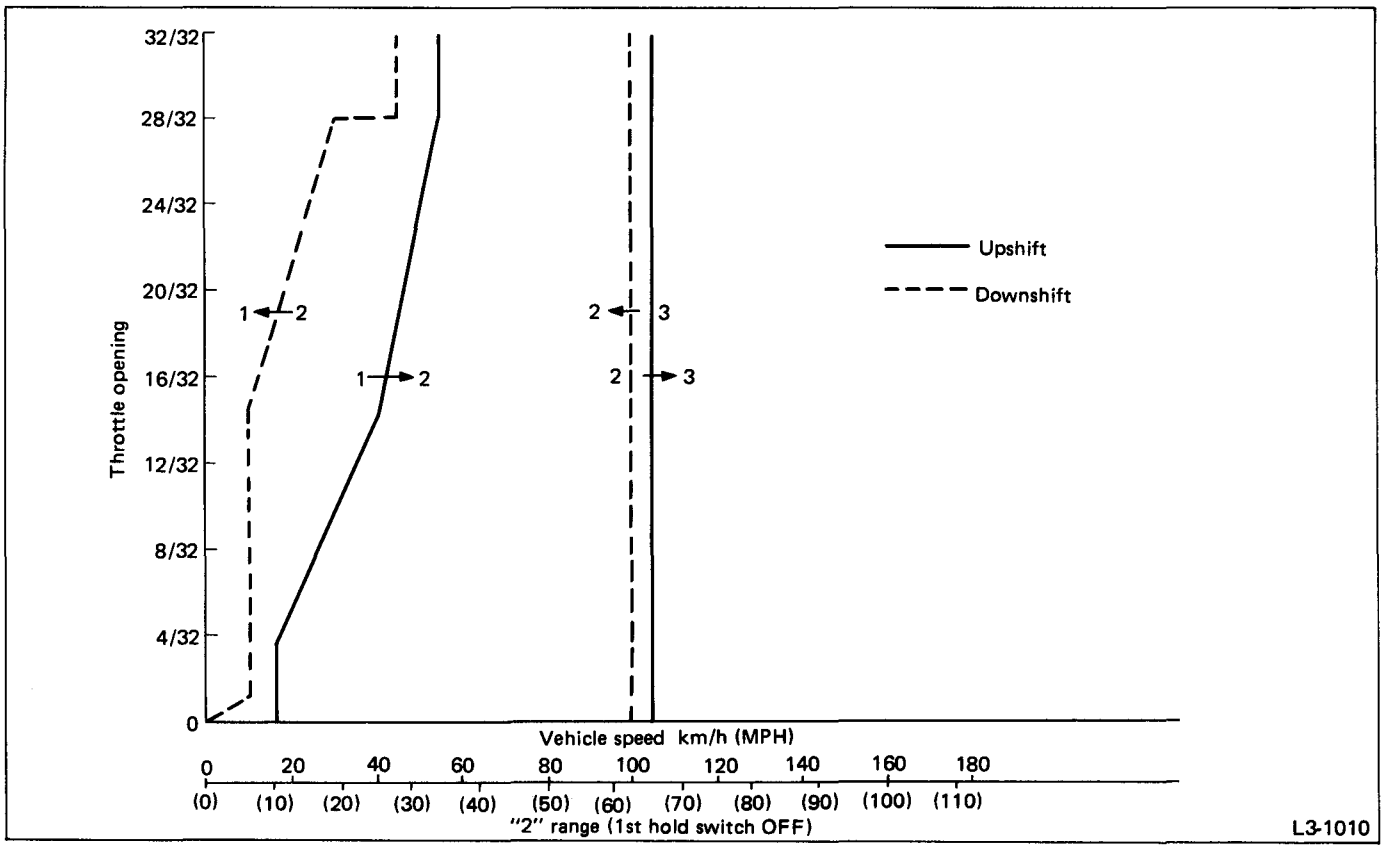

Fig. 332 "2" range (1st hold switch OFF)

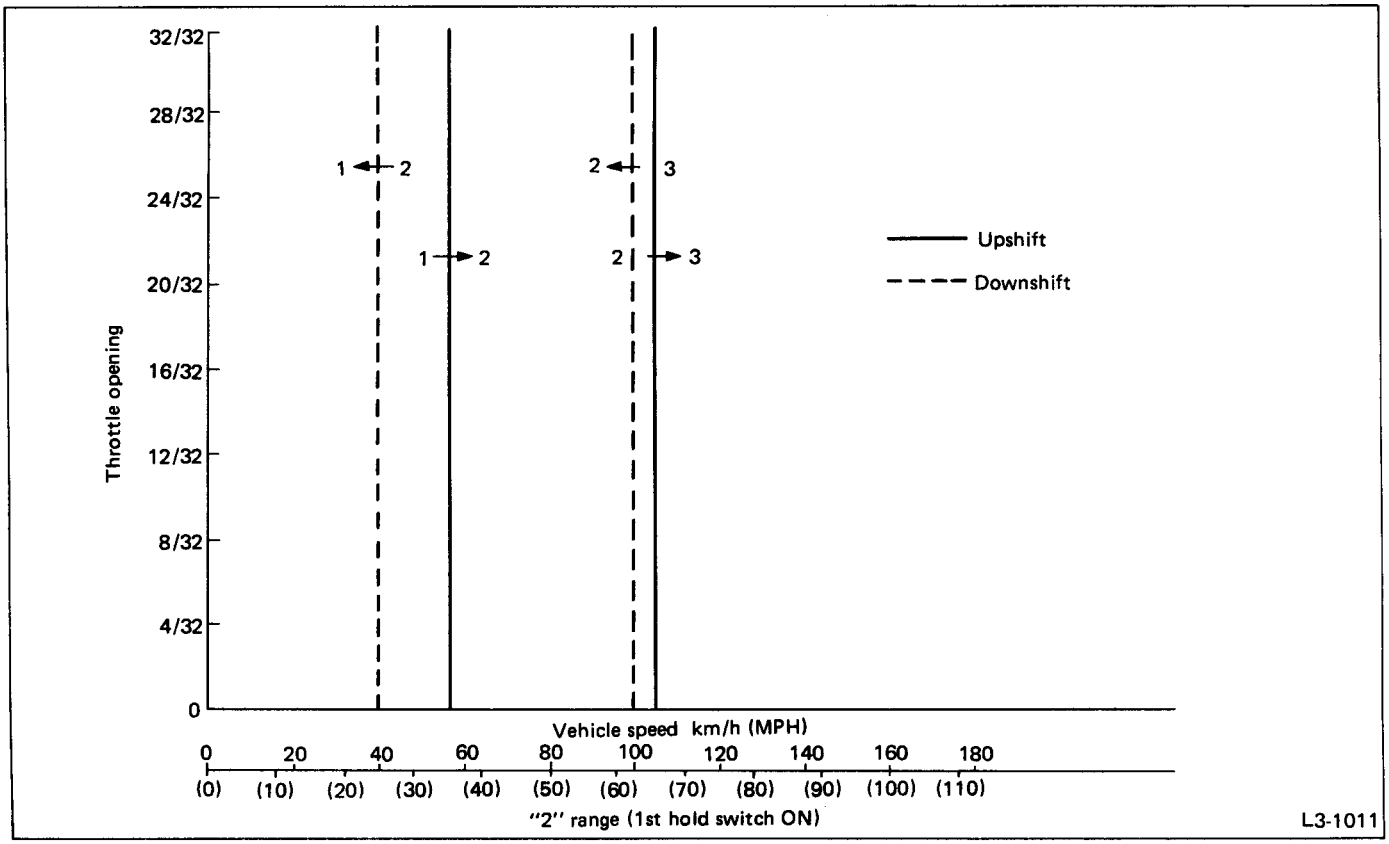

Fig. 333 "2" range (1st hold switch ON)

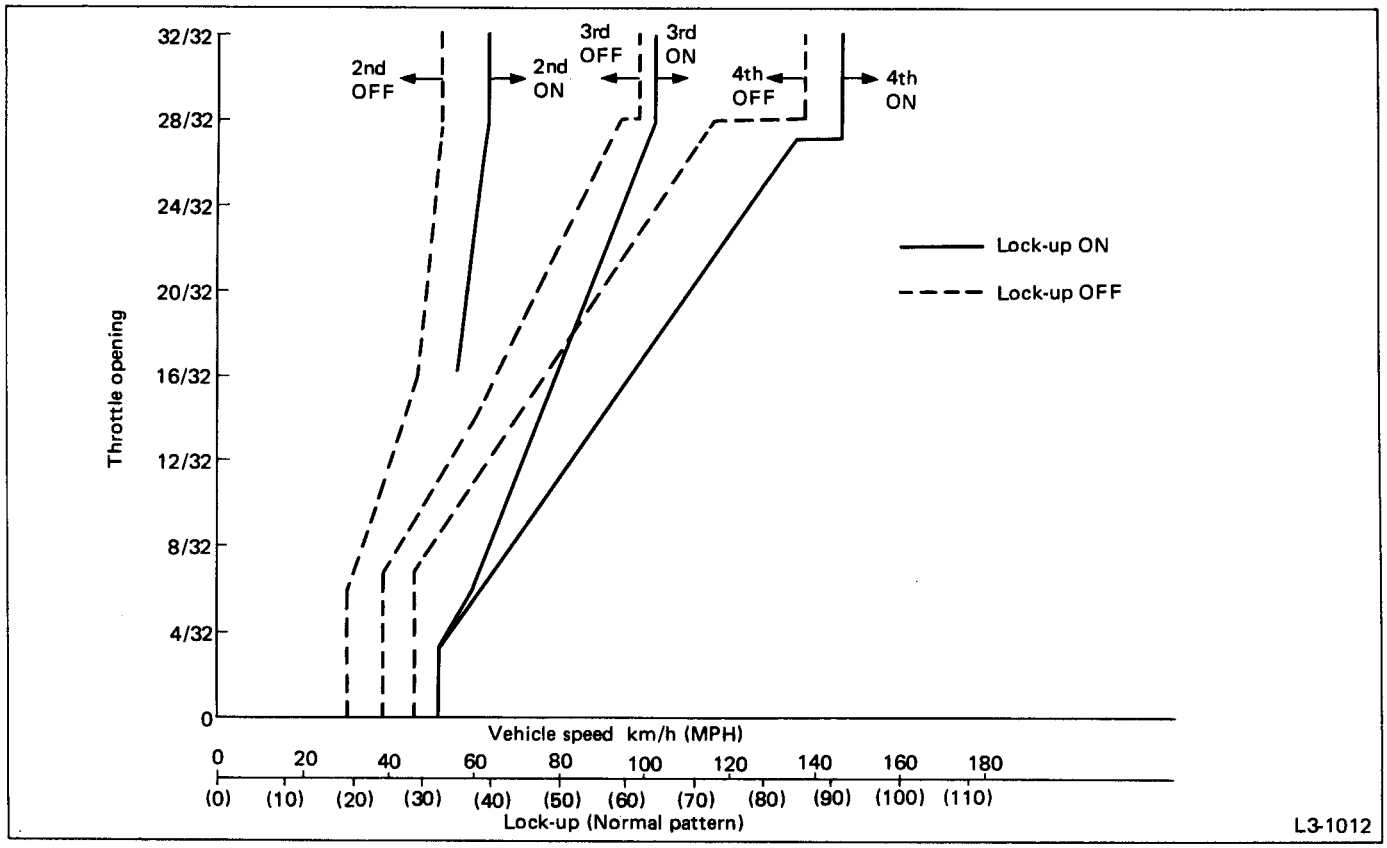

Fig. 334 Lock-up (Normal pattern)

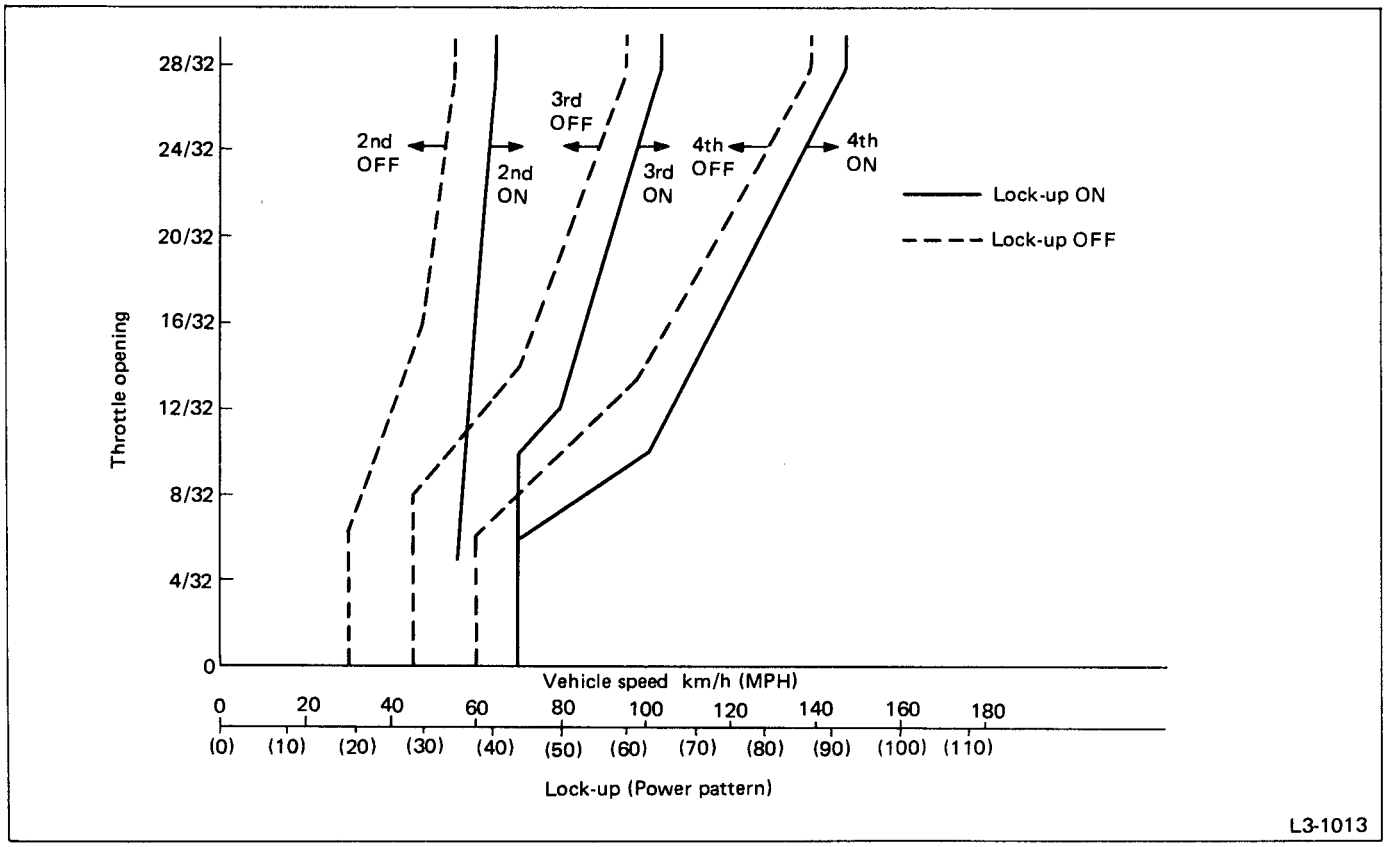

Fig. 335 Lock-up (Power pattern)

Check for the 4WD function

If "tight-corner braking" occurs when the steering wheel is fully turned at low speed:

1) Determine the applicable trouble code and check the corresponding duty solenoid C (transfer) for improper operation.

2) If the solenoid is operating properly, check transfer clutch pressure.

3) If oil pressure is normal but "tight-corner braking" occurs:

Check the transfer control valve for sticking, and the transfer clutch facing for wear.

(Refer to Disassembly and Inspection of the Transmission.)

TRANSMISSION CONTROL SYSTEM 3-3

SUBARU

1988

	Page
MECHANISM AND FUNCTION	2
4WD Shift Mechanism (Selective 4WD)	2
Konb and Switch (MT, Selective 4WD)	4
COMPONENT PARTS	5
Manual Transmission	5
Automatic Transmission	6
SERVICE PROCEDURE	7
Manual Transmission	7
Automatic Transmission	10

MECHANISM AND FUNCTION

4WD Shift Mechanism (Selective 4WD)

Shifting from front-wheel to 4-wheel drive or vice versa is accomplished by utilizing the intake manifold vacuum pressure.

In Front-Wheel Drive

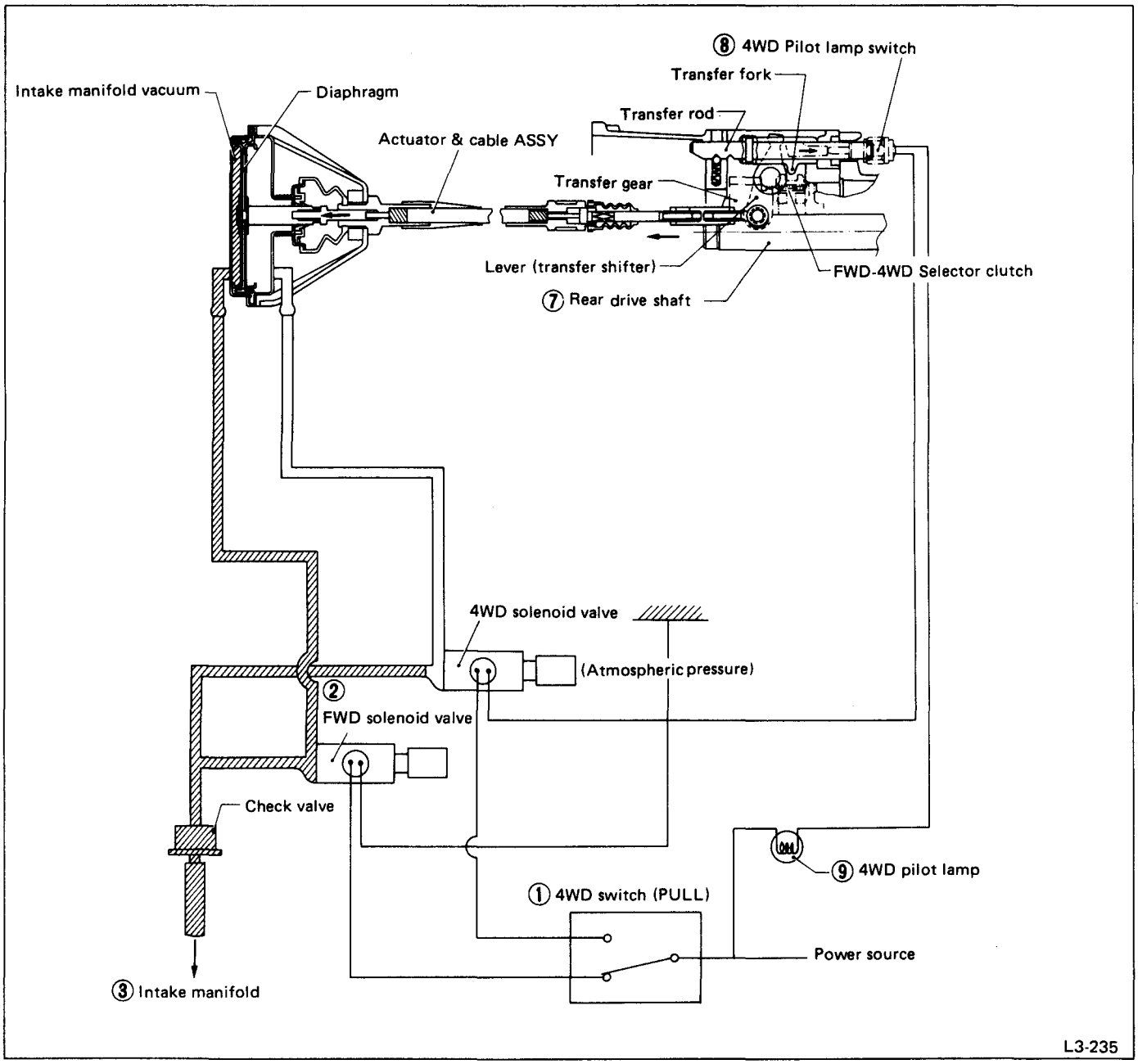

Fig. 1

When the 4WD switch button ① is pulled out with the engine on, the FWD solenoid valve ② is energized and the valve ② opens. This admits the intake manifold ③ vacuum pressure to the vacuum chamber so that the diaphragm is pulled in the direction of the arrow.

At this point, the power from the engine is not transferred to the rear drive shaft ⑦ and thus the vehicle is in front-wheel drive. The 4WD pilot lamp ⑨ in the combination meter remains off because the 4WD pilot lamp switch ⑧ is not turned on.

In 4-Wheel Drive

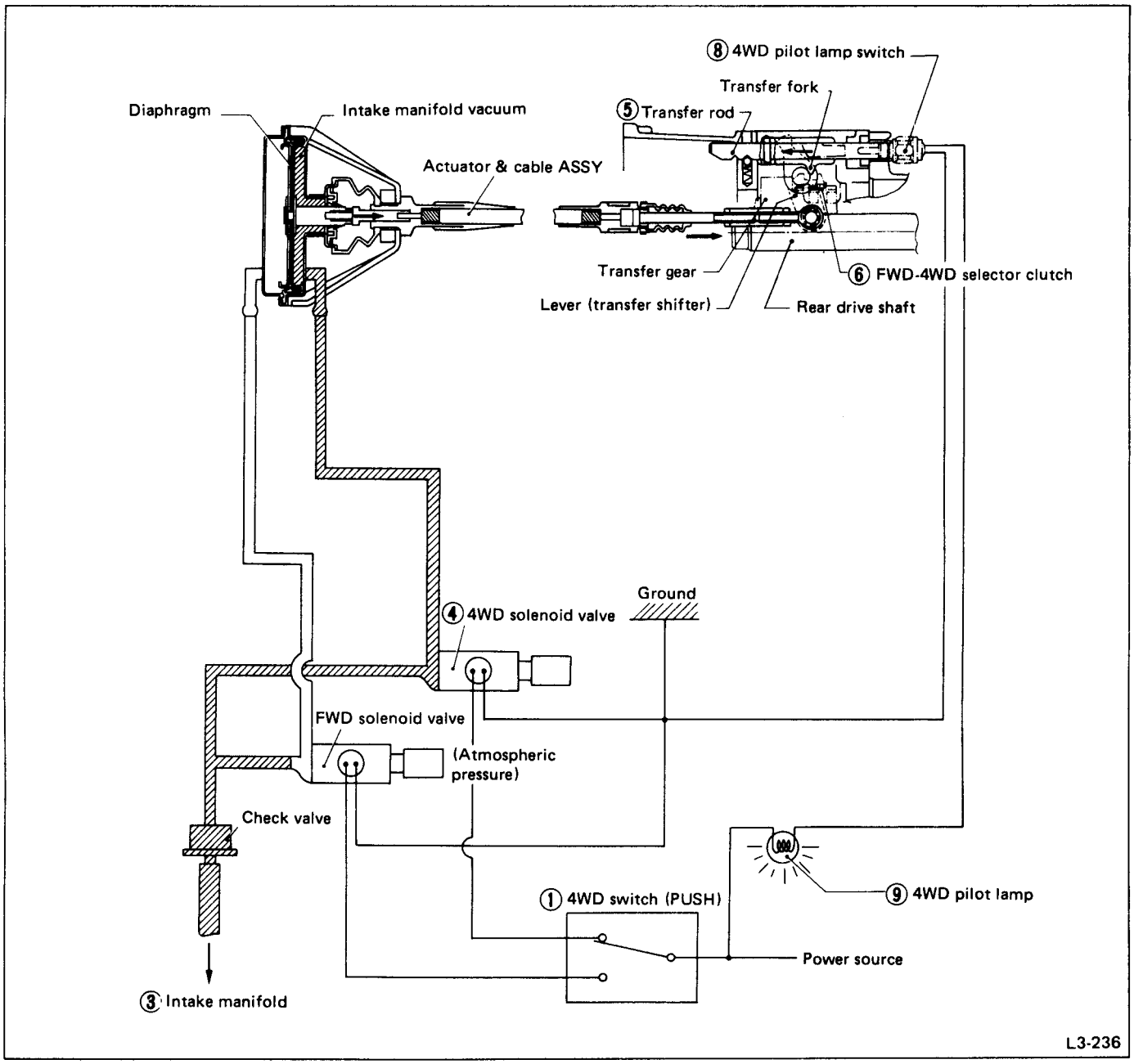

Fig. 2

When the 4WD switch button ① is pushed in with the engine on, the 4WD solenoid valve ④ is energized and the valve ④ opens. At this time, the vacuum pressure from the intake manifold ③ enters the valve so that the diaphragm inside the vacuum chamber is pulled in the direction of the arrow. The transfer rod ⑤ connected to the diaphragm also moves in that direction. This causes the FWD-4WD selector clutch ⑥ to engage the spline of the transfer gear so that the vehicle is set in 4-wheel drive. In 4-wheel drive, the 4WD pilot lamp switch ⑧ turns on the 4WD pilot lamp ⑨ in the combination meter. Changing from 4-wheel drive to front-wheel drive is accomplished by pushing the 4WD switch button ①.

Knob and Switch (MT, Selective 4WD)

1) Construction
The switch is soldered to the cord and is held to the knob with a screw. The cord is routed along the groove in the knob. The knob is secured to the lever with a spring pin.
2) Operation
When the switch is pressed to ON, the car is set to the 4WD mode; when it is pressed again, the car is set to the FWD mode.

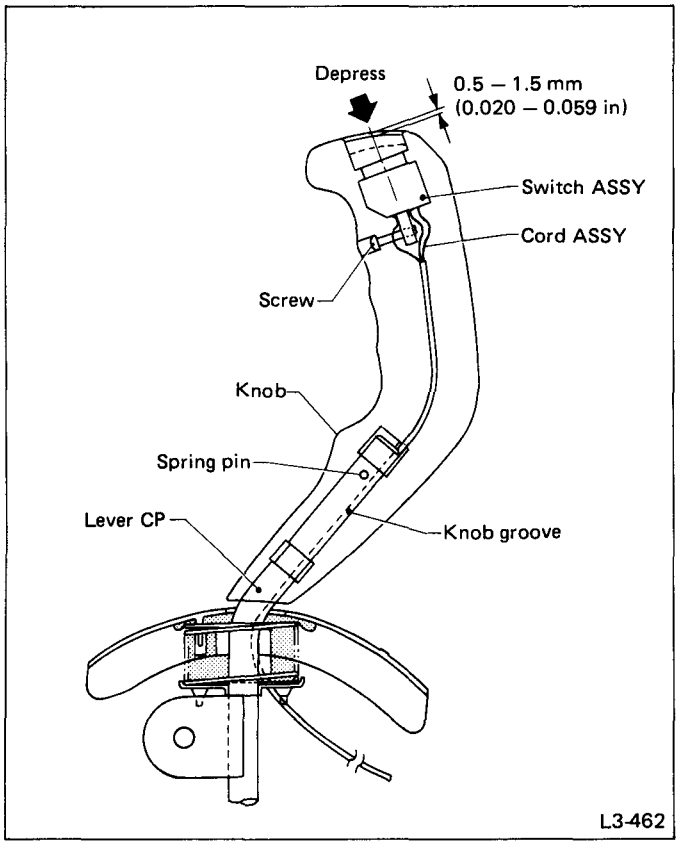

Fig. 3

COMPONENT PARTS

Manual Transmission

Tightening torque: N·m (kg-m, ft-lb)
T1: 9 – 15 (0.9 – 1.5, 6.5 – 10.8)
T2: 14 – 22 (1.4 – 2.2, 10 – 16)

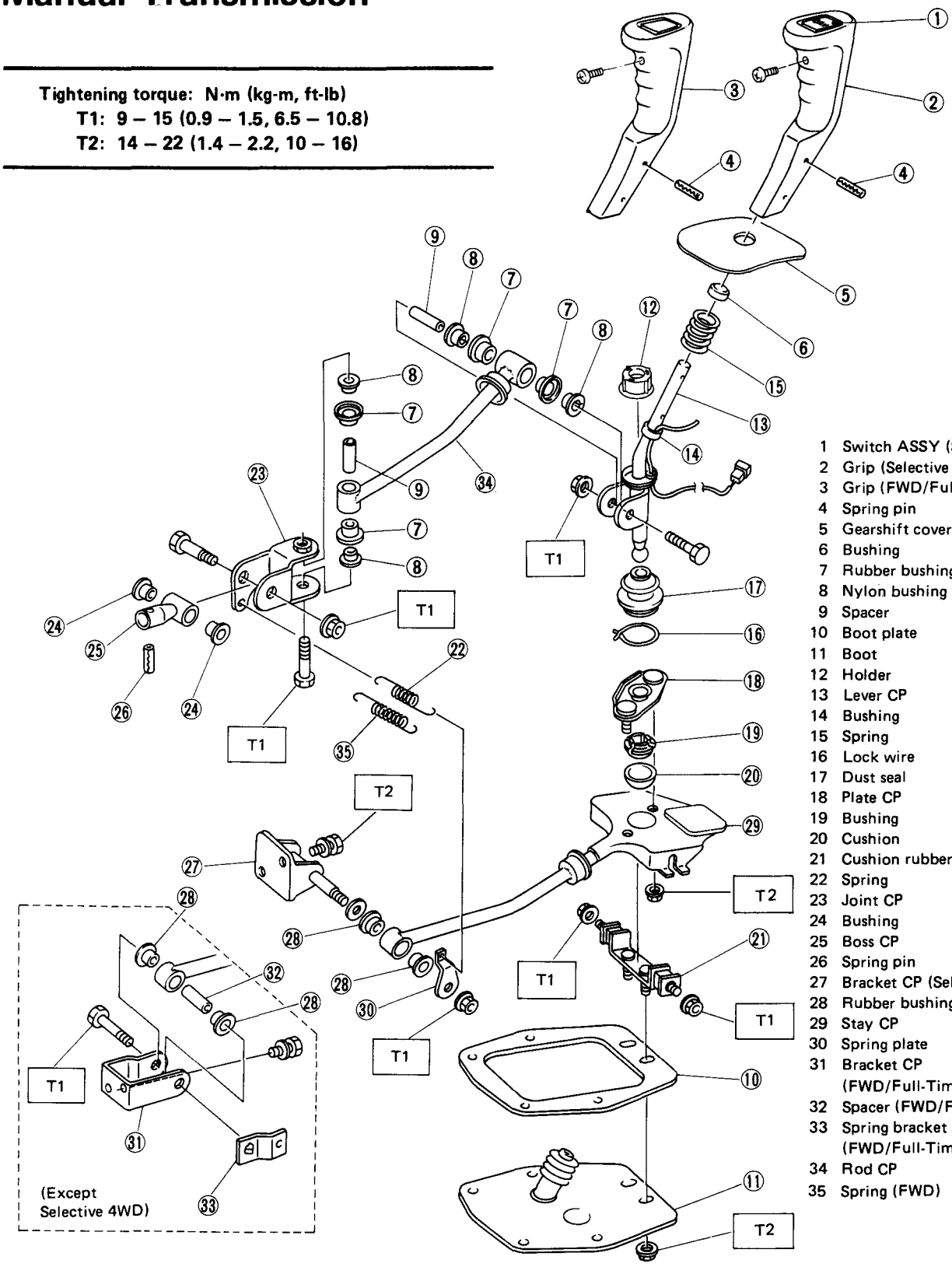

1 Switch ASSY (Selective 4WD)
2 Grip (Selective 4WD)
3 Grip (FWD/Full-Time 4WD)
4 Spring pin
5 Gearshift cover
6 Bushing
7 Rubber bushing
8 Nylon bushing
9 Spacer
10 Boot plate
11 Boot
12 Holder
13 Lever CP
14 Bushing
15 Spring
16 Lock wire
17 Dust seal
18 Plate CP
19 Bushing
20 Cushion
21 Cushion rubber
22 Spring
23 Joint CP
24 Bushing
25 Boss CP
26 Spring pin
27 Bracket CP (Selective 4WD)
28 Rubber bushing
29 Stay CP
30 Spring plate
31 Bracket CP (FWD/Full-Time 4WD)
32 Spacer (FWD/Full-Time 4WD)
33 Spring bracket CP (FWD/Full-Time 4WD)
34 Rod CP
35 Spring (FWD)

Fig. 4 L3-463

Automatic Transmission

Tightening torque: N·m (kg-m, ft-lb)
T1: 13 – 23 (1.3 – 2.3, 9 –17)
T2: 10 – 18 (1.0 –1.8, 7 – 13)
T3: 9 – 15 (0.9 – 1.5, 6.5 – 10.8)
T4: 1.3 – 2.6 (0.13 – 0.27, 0.9 – 2.0)
T5: 4.4 – 7.4 (0.45 – 0.75, 3.3 – 5.4)

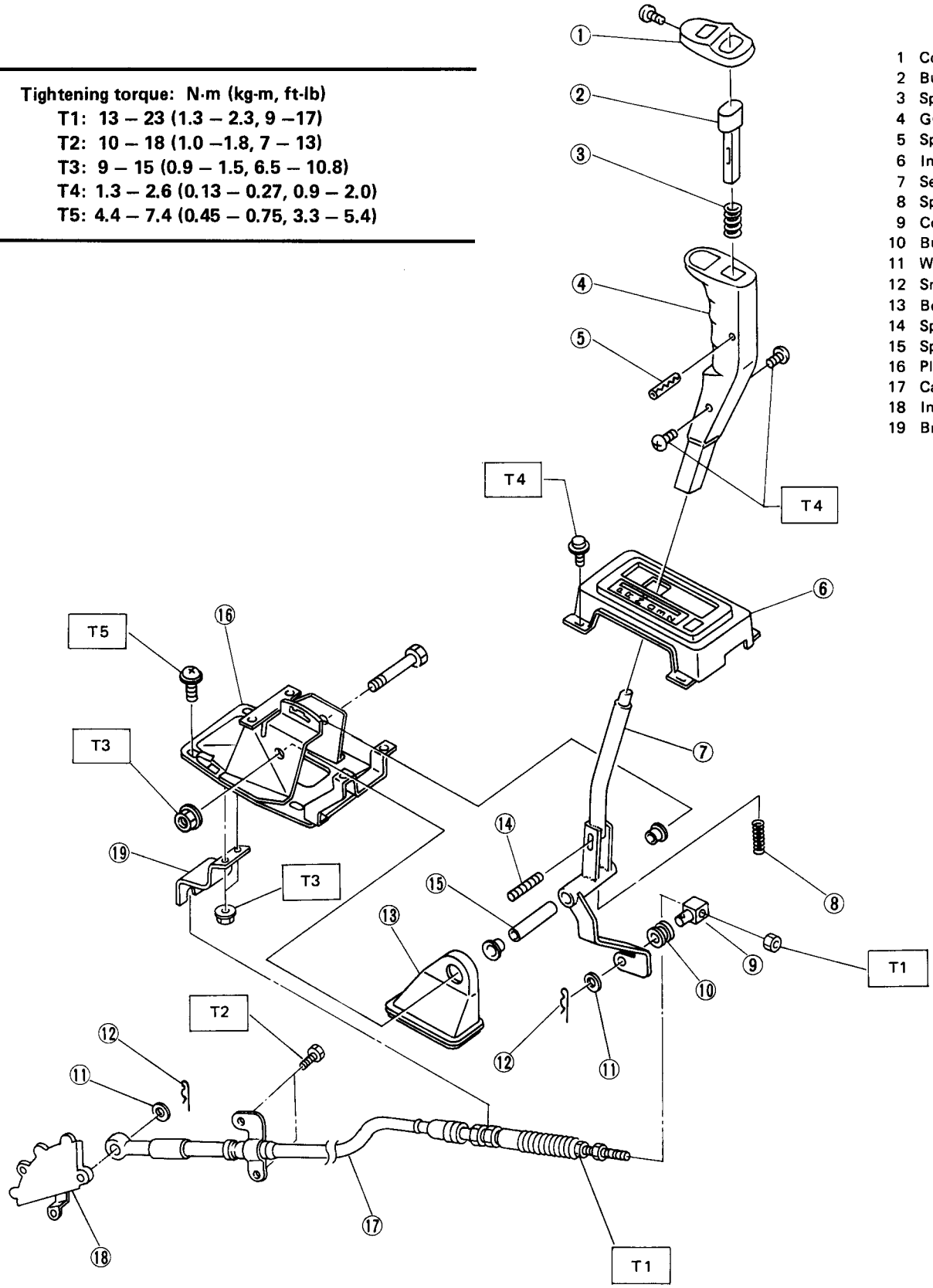

1 Cover
2 Button
3 Spring
4 Grip
5 Spring pin
6 Indicator ASSY
7 Selector lever
8 Spring
9 Connector
10 Bushing
11 Washer
12 Snap pin
13 Boot
14 Spring pin
15 Spacer
16 Plate CP
17 Cable
18 Inhibitor switch
19 Bracket

Fig. 5 L3-464

SERVICE PROCEDURE

Manual Transmission

ON-CAR SERVICE

Confirm the following: (Selective 4WD vehicle only)
1) The switch activation stroke of the lever CP is 5 mm (0.20 in). ON-operation force is not more than 14.7 N (1.5 kg, 3.3 lb). There is no binding.
2) A single push of the switch turns on 4WD mode and an additional push returns to FWD mode.

REMOVAL

1) Remove the console box. (Selective 4WD)
2) Disconnect the connector for 4WD switch. (Selective 4WD)
3) Remove the rear exhaust pipe.

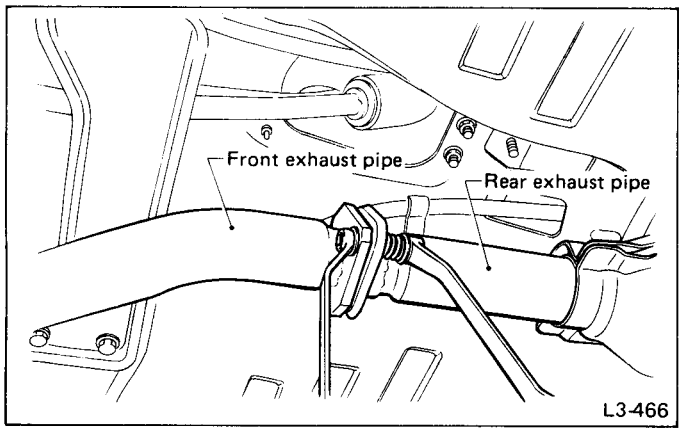

Fig. 6

4) Remove the spring between joint CP and bracket CP.

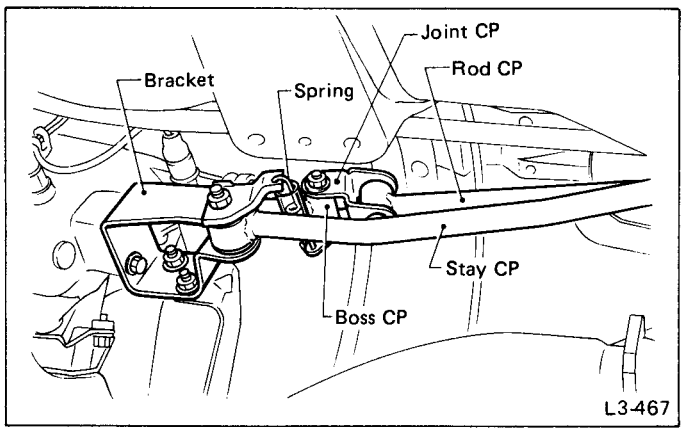

Fig. 8

5) Remove the bolt to take off the stay CP from the transmission.
6) Remove the bolt to disconnect the rod from the joint.
7) Remove the nut to take off the gearshift lever ASSY from the body.

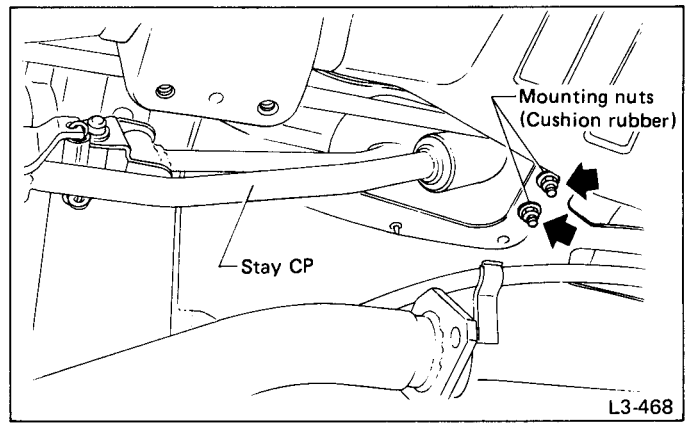

Fig. 9

DISASSEMBLY

1) Disconnect the rod from the gearshift lever ASSY.

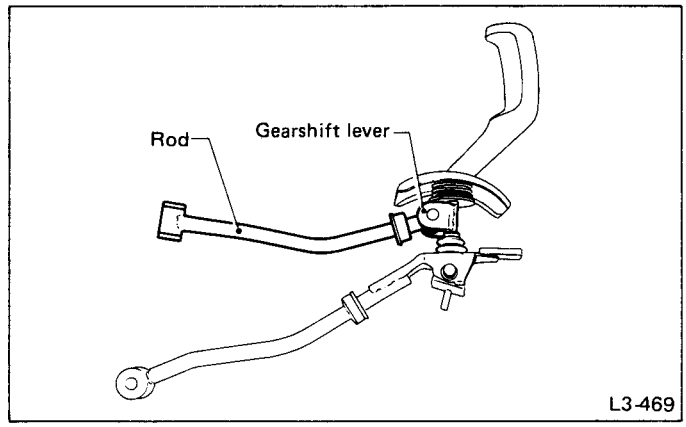

Fig. 10

2) Remove the following parts from the rod CP both sides.
   ① Spacer
   ② Bushing (Rubber)
   ③ Bushing (Nylon)

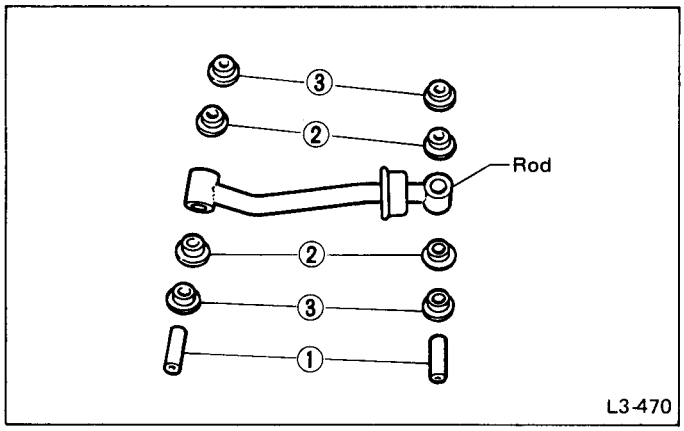

Fig. 11

3) Remove the cushion rubber.
4) Remove two nuts to disconnect the lever from the stay CP.

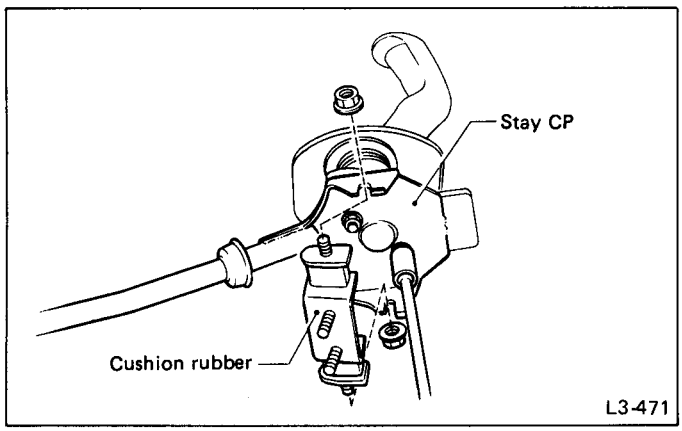

Fig. 12

5) Remove the following parts from the lever:
   ① Cushion
   ② Bushing
   ③ Plate CP
   ④ Dust seal
   ⑤ Locking wire

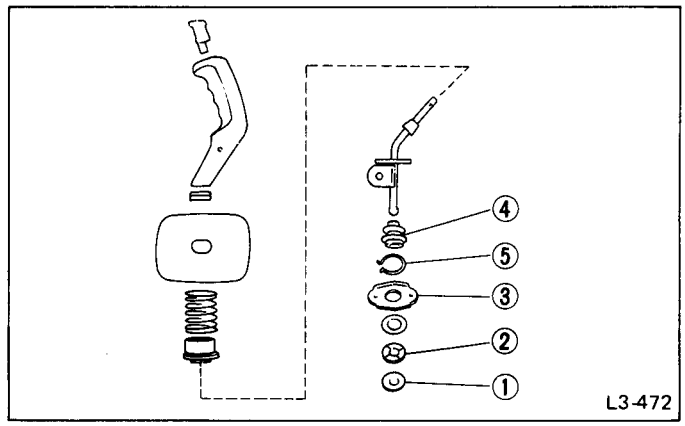

Fig. 13

6) Remove the following parts from the stay CP. (FWD/Full-Time 4WD)
   ① Bushing
   ② Spacer
   ③ Spring bracket CP
   ④ Bracket CP

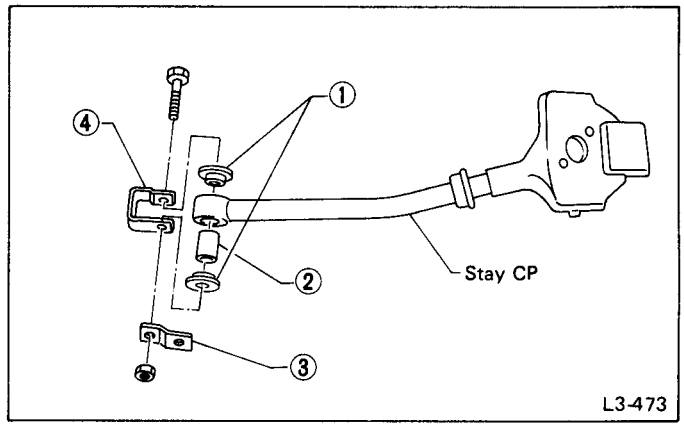

Fig. 14

(Selective 4WD)
① Bushing
② Washer
③ Spring plate
④ Bracket CP

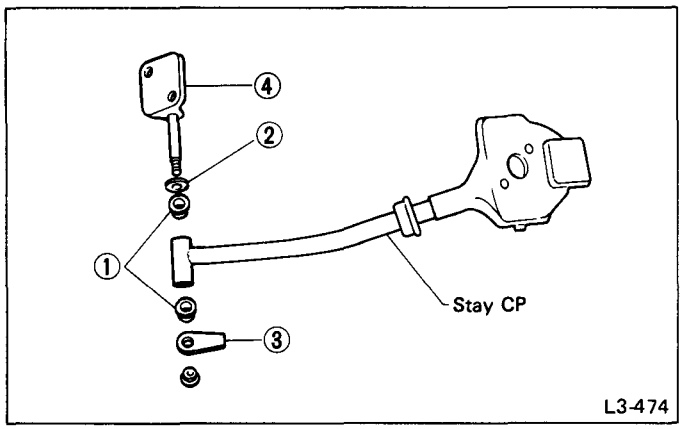

Fig. 15

CHECK

Check the following parts for deformation, damage, and wear. Repair or replace any defective parts. Determine defective parts by comparing with new parts.
① Bushing
② Cushion
③ Spacer
④ Dust seal
⑤ Link, rod, and lever
⑥ Joint CP
⑦ Spring
⑧ Wiring harness (Selective 4WD)

ASSEMBLY

1) Clean all parts before assembly.
2) Mount the following parts on the stay CP.
(FWD/Full-Time 4WD)
① Bushing
② Spacer
③ Spring bracket CP
④ Bracket CP
(Selective 4WD)
① Bushing
② Washer
③ Spring plate
④ Bracket CP

3) Assemble the plate CP and dust seal.
(1) Tighten with the locking wire [1 mm (0.04 in) dia.] to the extent that the dust seal will not come off.
(2) Direct the locking wire end toward the plate side so as not to damage the dust seal.

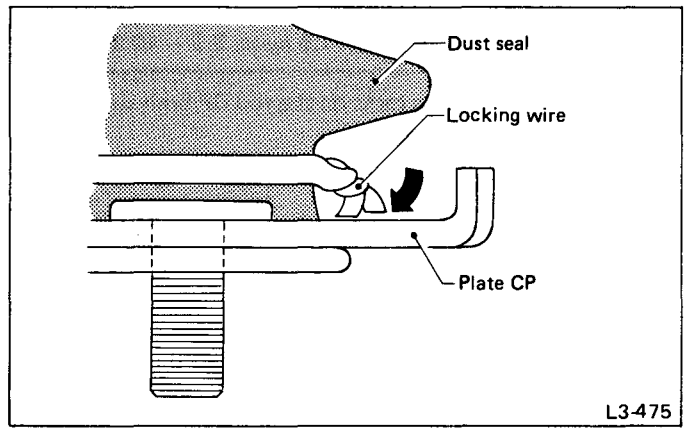

Fig. 16

4) Mount the following parts on the lever.
① Dust seal
② Bushing
• Apply grease [SUNLIGHT No. 2 (003602010) or equivalent] to the inner surface of the bushing.
③ Cushion
5) Mount the above-mentioned lever on the stay CP.
(1) Apply sealant on the stay CP surface mating with the plate, not at a place inside the bolt hole and where sealant will fall into the hollow.
Sealant: Butyl rubber tape [1.5 mm (0.059 in) dia.]
(2) Mount the plate CP on the stay CP.

Tightening torque:
14 – 22 N·m (1.4 – 2.2 kg-m, 10 – 16 ft-lb)

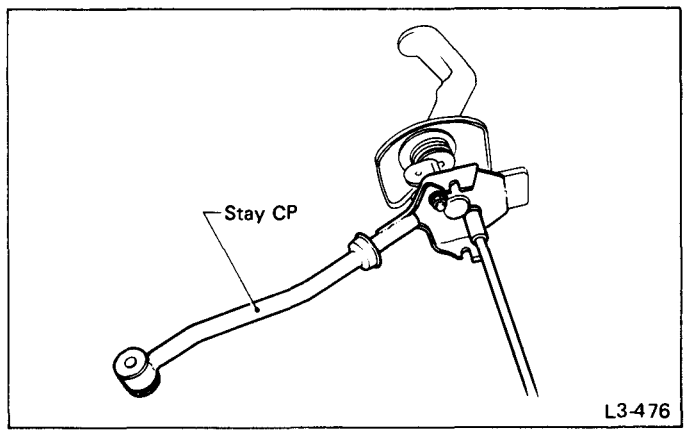

Fig. 17

(3) After assembling, check that the lever moves smoothly.
(4) Mount the cushion rubber on the stay CP.

Tightening torque:
Stay CP to cushion rubber
9 – 15 N·m (0.9 – 1.5 kg-m, 6.5 – 10.8 ft-lb)

6) Mount the following parts on the rod CP both sides.
① Bushing (Rubber)
② Bushing (Nylon)
③ Spacer
(1) Apply grease [SUNLIGHT No. 2 (003602010) or equivalent] to the inner and side surfaces of the bushings when installing the spacers.
(2) Mount the chrome-plated (silver) spacer at the lever end and the galvanized (yellow) spacer at the transmission end.
(3) The rod should be installed in the direction shown in the figure below.

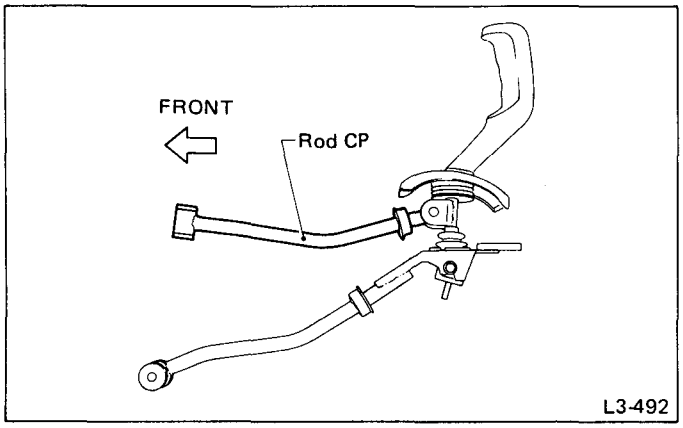

Fig. 18

7) Connect the rod CP to the lever.

Tightening torque:
9 – 15 N·m (0.9 – 1.5 kg-m, 6.5 – 10.8 ft-lb)
Rocking torque:
2.7 N·m (0.28 kg-m, 2.0 ft-lb) or lower

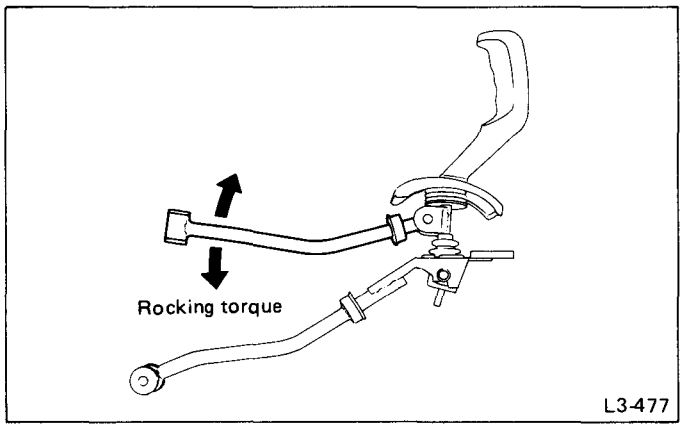

Fig. 19

8) Check that there is no excessive play and that the parts move smoothly.

INSTALLATION

1) Mount the rod CP at the joint on the transmission.
- Insert the bolt from the lower side.

Tightening torque:
9 – 15 N·m (0.9 – 1.5 kg-m, 6.5 – 10.8 ft-lb)

2) Mount the bracket CP on the transmission.

Tightening torque:
14 – 22 N·m (1.4 – 2.2 kg-m, 10 – 16 ft-lb)

3) Mount the gearshift lever ASSY on the body.

Tightening torque:
14 – 22 N·m (1.4 – 2.2 kg-m, 10 – 16 ft-lb)

4) Mount the spring between joint CP and bracket CP.

For FWD models, the hook shape of the spring differs at each end. The longer hook end should be attached at the joint CP.

5) Connect the connector for 4WD switch. (Selective 4WD)
6) Install the console box. (Selective 4WD)
7) Check that the lever moves smoothly.
8) Install the exhaust pipe (rear).

Automatic Transmission

REMOVAL

1) Remove the cable ASSY.
(1) Separate cable from transmission lever.
(2) Remove cable clamp from transmission case.

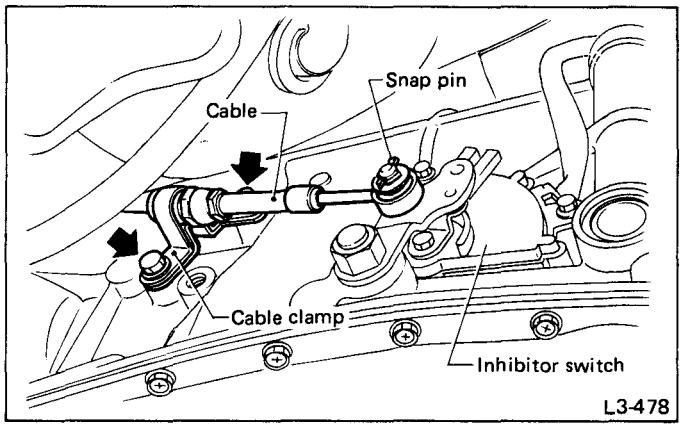

Fig. 20

(3) Disconnect cable from selector lever.

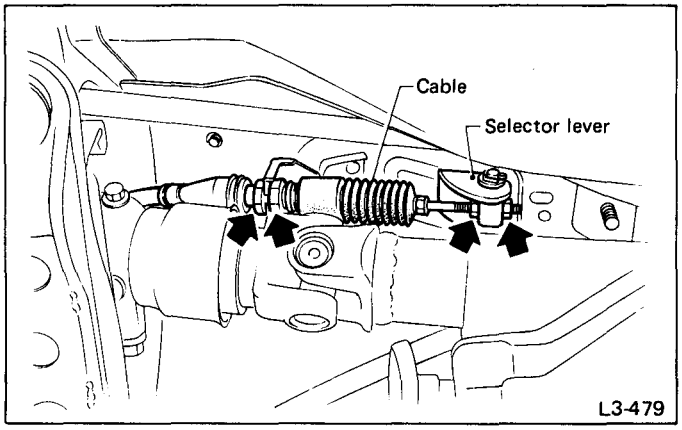

Fig. 21

(4) Remove the cable ASSY from bracket by removing mounting nuts.

2) Remove the hand brake cover.

3) Remove the console box. (Refer to 5-3 console box.)

4) Disconnect the illumination light connector and 1-HOLD switch connector.

5) Remove the selector lever ASSY.

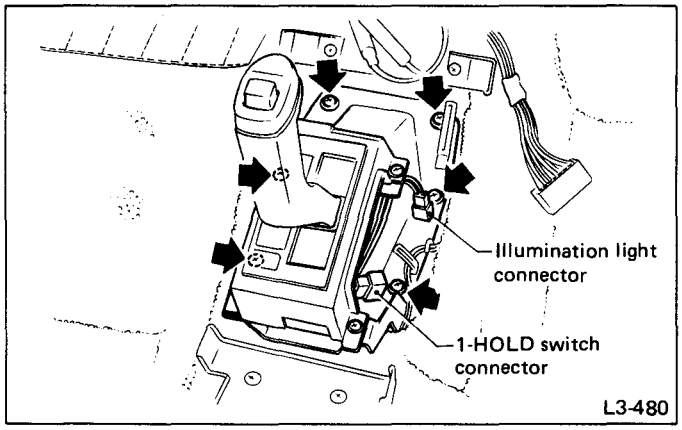

Fig. 22

Remove body and plate CP while removing butyl rubber seal.

DISASSEMBLY

1) Remove the following parts from the lever assembly.
- Grip
- Indicator ASSY

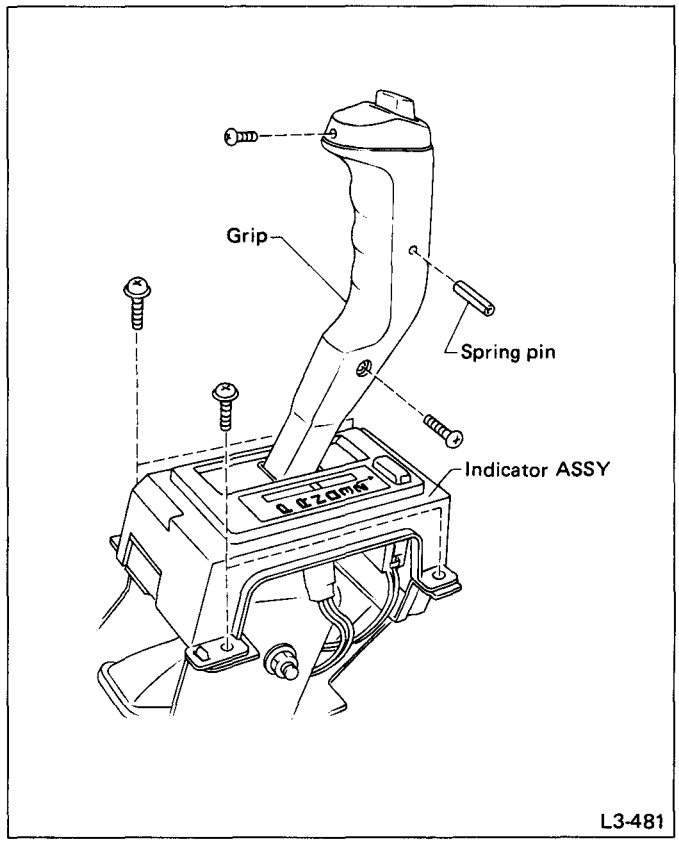

Fig. 23

2) Drive out the spring pin to the position where it is detached from the guide plate of plate CP as shown in figure.

Be careful not to damage the connected parts.

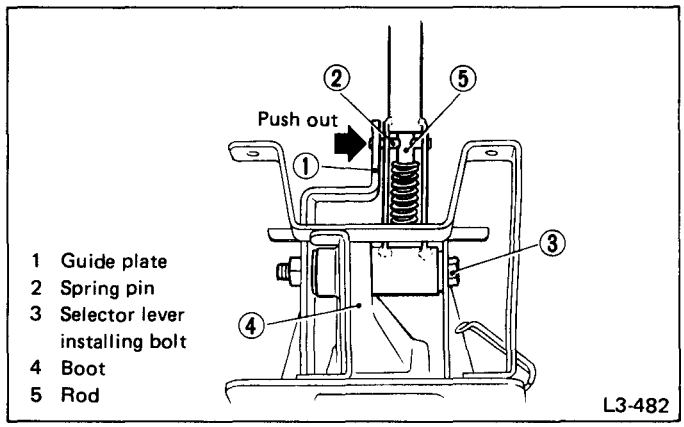

Fig. 24

3) Remove selector lever installing bolt and detach the boot by pushing it from underneath, then disconnect the selector lever from plate CP.

Do not remove the bushings from selector lever.

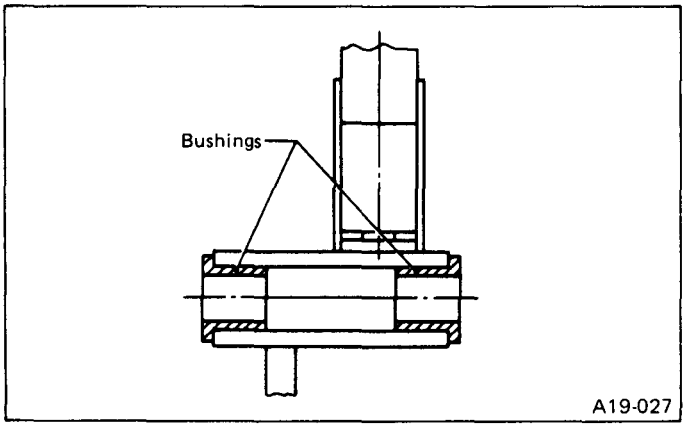

Fig. 25

4) Install the grip and button to the selector lever temporarily, and drive the spring pin out from rod, taking care not to make damage on connected parts.

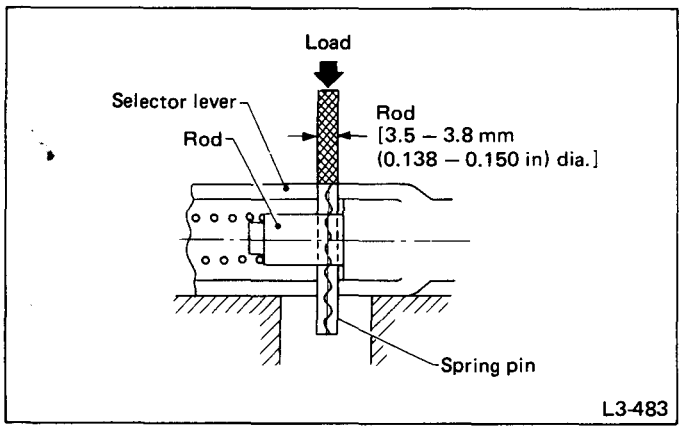

Fig. 26

INSPECTION

1) Inspect the removed parts by comparing with new ones for deformation, damage and wear. Correct or replace if defective.

① Rubber bushing
② Selector lever rod
③ Boot
④ Plate CP
⑤ Spring
⑥ Button
⑦ Grip
⑧ Indicator ASSY

2) Confirm the following parts for operating condition before assembly.

(1) Sliding condition of the button in the grip ... they should be moved smoothly.

(2) Insertion of the grip on the selector lever ... When pushing the grip on selector lever by hand, the screw holes should be aligned in line.

(3) Operation of the selector lever and rod ... they should be moved smoothly.

(4) Insertion of the spacer into the selector lever ... it should be inserted lightly by fingers.

ASSEMBLY

1) Clean all disassembled parts.
2) Assemble rod to selector lever.

(1) Apply grease on both sliding part ends of rod and spring, then insert them into selector lever.

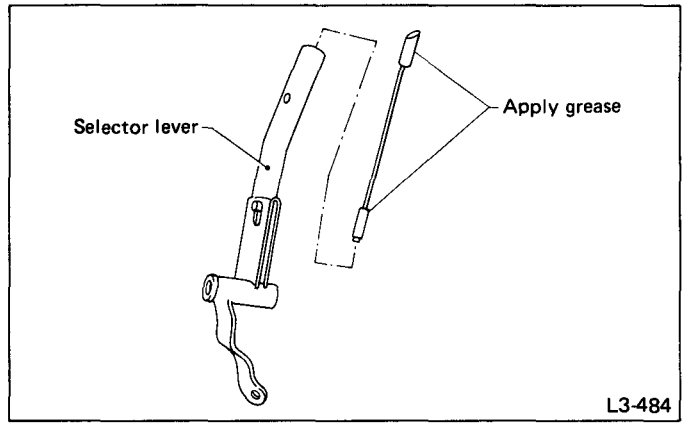

Fig. 27

(2) Match the oblong hole of selector lever and the spring pin hole of rod.

(3) Press the spring pin into the selector lever and rod from side opposite arm.

In order to prevent the spring pin from contacting with the guide plate of plate CP, stop the spring pin at the same level of selector lever outer surface as shown in figure.

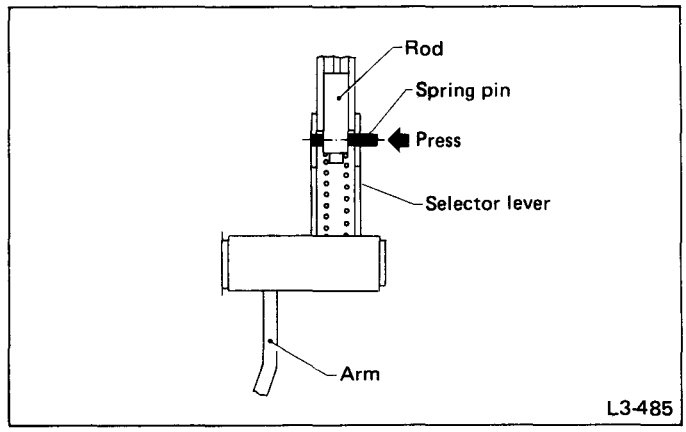

Fig. 28

3) Assemble the following parts to selector lever.
   ① Spring
   Apply grease to prevent noise.
   ② Rubber bushing
   ③ Boot
   Coat grease on sliding surface of the boot.
   ④ Spacer
   Coat grease on the surface of spacer.
   ⑤ Connector
   ⑥ Washer
   ⑦ Snap pin

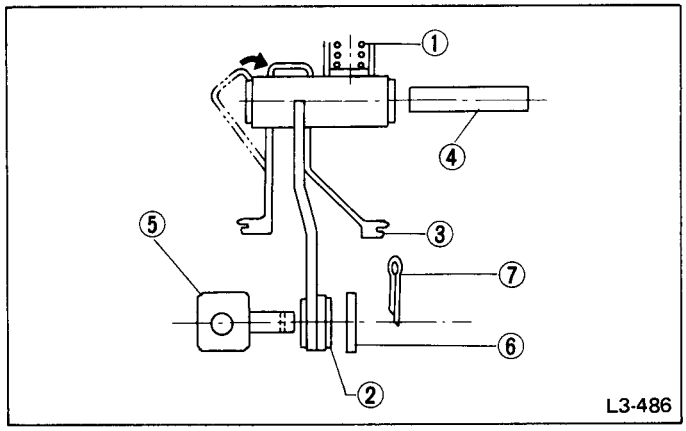

Fig. 29

4) Assemble selector lever to plate CP.
   (1) Install the selector lever to the plate CP, and insert the bolt. Tighten flange nut to the specified torque.

Tightening torque (Flange nut):
9 – 15 N·m (0.9 – 1.5 kg-m, 6.5 – 10.8 ft-lb)

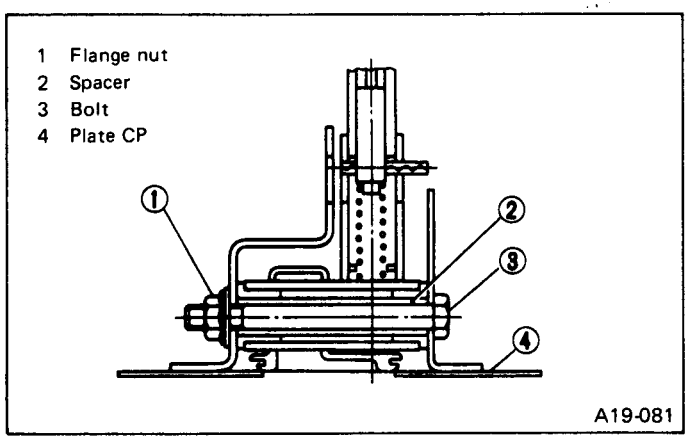

Fig. 30

(2) Insert the boot into the plate by pushing boot edge with fingers.

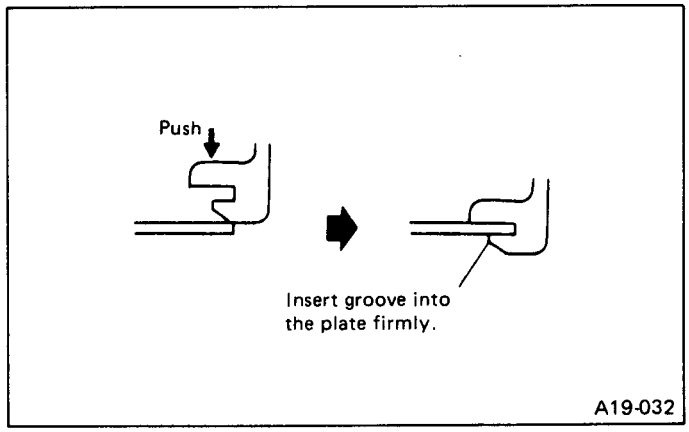

Fig. 31

(3) Drive in the spring pin to the same level as selector lever outer surface.

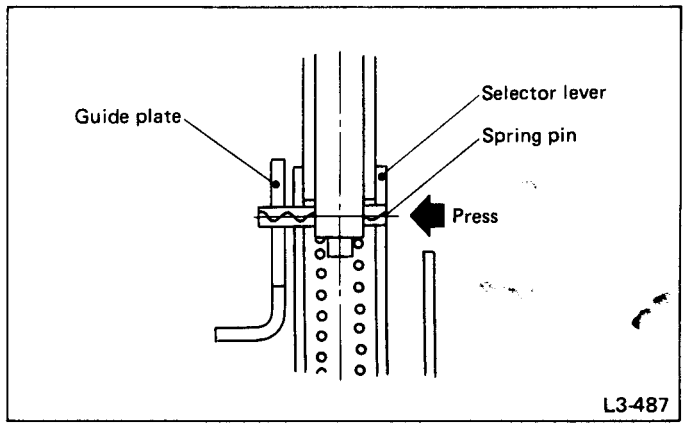

Fig. 32

5) Assemble indicator to plate CP.

Tightening torque (Flange screw):
1.3 – 2.6 N·m (0.13 – 0.27 kg-m, 0.9 – 2.0 ft-lb)

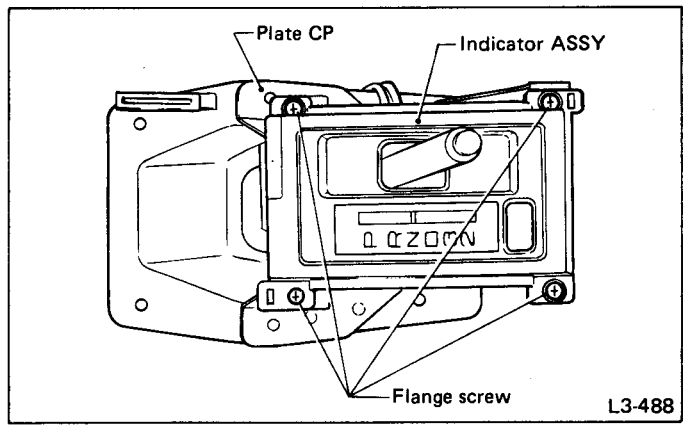

Fig. 33

6) Assemble the grip cover, spring, and button to selector lever.

(1) Apply grease on the sliding part of the grip and button, and spring.

(2) Insert the spring and button into the grip and then drive in the spring pin.

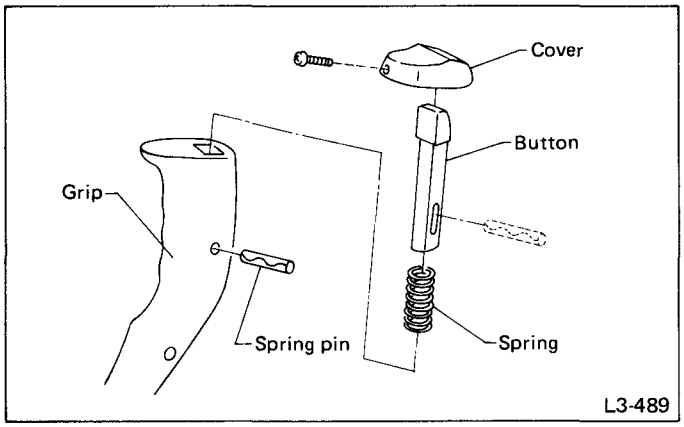

Fig. 34

(3) Attach the cover on the grip.

(4) Insert the grip on the select lever, then tighten screws to the specified torque with the torque driver.

Tightening torque:
1.3 – 2.6 N·m (0.13 – 0.27 kg-m, 0.9 – 2.0 ft-lb)

5 to 6 mm (0.20 to 0.24 in) length screw should be used.

7) After the completion of fitting, transfer the select lever to range "P" ~ "2", pressing the button of the grip; then check whether the indicator and select lever agree, whether the pointer and position mark agree and what the operating force is.

INSTALLATION

1) Mount the select lever ASSY onto the car body.

(1) Apply Butyl rubber (sealing agent) between the select lever through the hole in the car body and the threaded fitting hole, and use six bolts for fitting.

Tightening torque:
4.4 – 7.4 N·m (0.45 – 0.75 kg-m, 3.3 – 5.4 ft-lb)

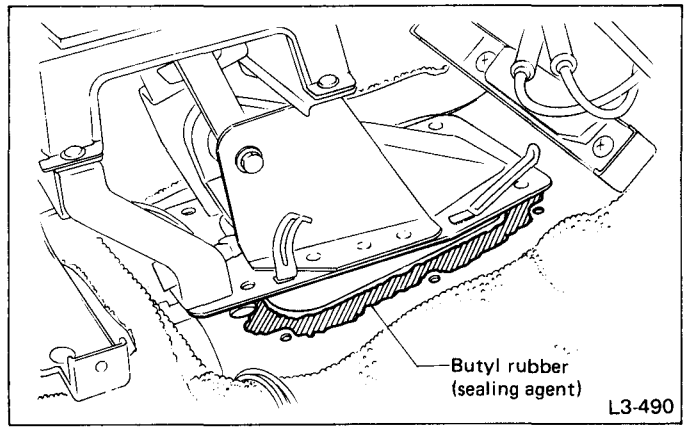

Fig. 35

(2) Set the location of the select lever at "N".

2) Connect the cable ASSY.

(1) Set the location of the selector arm of the transmission at "N".

(2) Pass the inner cable through the selector arm pin and then connect it using a washer and snap pin.

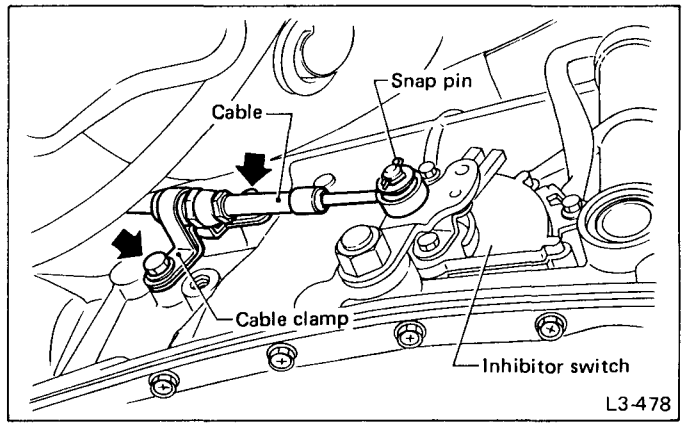

Fig. 36

(3) Attach the outer cable to transmission case with bolts.

(4) Insert the thread portion of the other inner cable end into the connector hole of the selector lever, and fix the other outer cable end to the bracket.

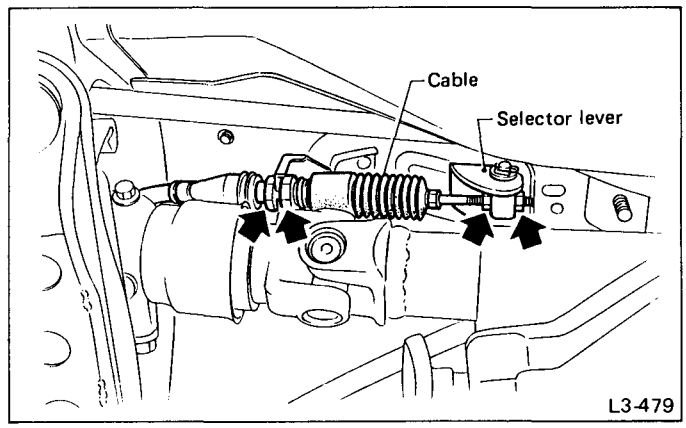

Fig. 37

3) Adjust the inner cable length.
(1) Push select lever arm in the "W" direction with a force of 2.0 – 6.9 N (0.2 – 0.7 kg, 0.4 – 1.5 lb) until nut ⓐ contacts the connector.

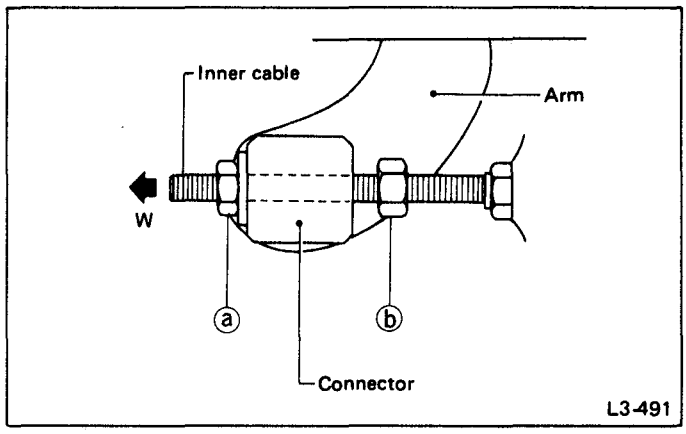

Fig. 38

(2) While firmly grasping nut ⓐ with a wrench, tighten nut ⓑ.

Tightening torque:
13 – 23 N·m (1.3 – 2.3 kg-m, 9 – 17 ft-lb)

4) After completion of the fitting, make sure that the lever operates smoothly all across the operating range.
5) Connect the harnesses and check the following items.
(1) The engine starts operating when it is in positions "P" and "N", but not in other positions.
(2) The back-up lamp is lit when it is in position "R", but not in other positions.
(3) The above starting and lighting are not performed at the same time.
(4) Check that select lever does not move from "N" to "R" without pushing the button.
(5) Check that select lever does not move from "R" to "P" without pushing the button.
(6) Check that select lever does not move from "P" to "R" without pushing the button.
(7) Check that select lever does not move from "3" to "2" without pushing the button.
6) Fit the console.

SUBARU

1988

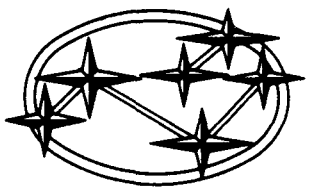

Page

MECHANISM AND FUNCTION 2
Propeller Shaft 2
Rear Differential 3
Limited Slip Differential (LSD) 4
SPECIFICATIONS AND SERVICE DATA 7
COMPONENT PARTS 11
Rear Differential Mounting System 11
Propeller Shaft and Drive Shaft 12
Rear Differential Assembly 13
SERVICE PROCEDURE 14
Propeller Shaft 14
On-Car Services 16
Rear Differential Assembly 20
TROUBLESHOOTING 31

MECHANISM AND FUNCTION

Propeller Shaft

The propeller shaft is of three-joint type to accommodate high-speed operations. The joint is provided with shell-cup bearings which do not require maintenance.

1 Center bearing ASSY
2 Front propeller shaft ASSY
3 Rear propeller shaft ASSY
4 Companion flange
5 Washer
6 Stake nut
7 Bolt
8 Spring washer
9 Nut

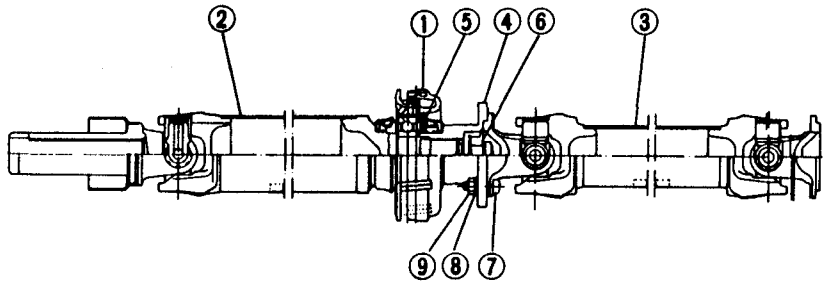

L3-182

Fig. 1

Rear Differential

A hypoid drive gear with a nominal diameter of 160 mm (6.30 in) is used and the drive pinion shaft is supported on three bearings, the bearing preload being adjusted by a selective spacer and washer. The drive pinion height is adjusted by selecting washers located at the drive pinion neck using Dummy Shaft and Gauge.

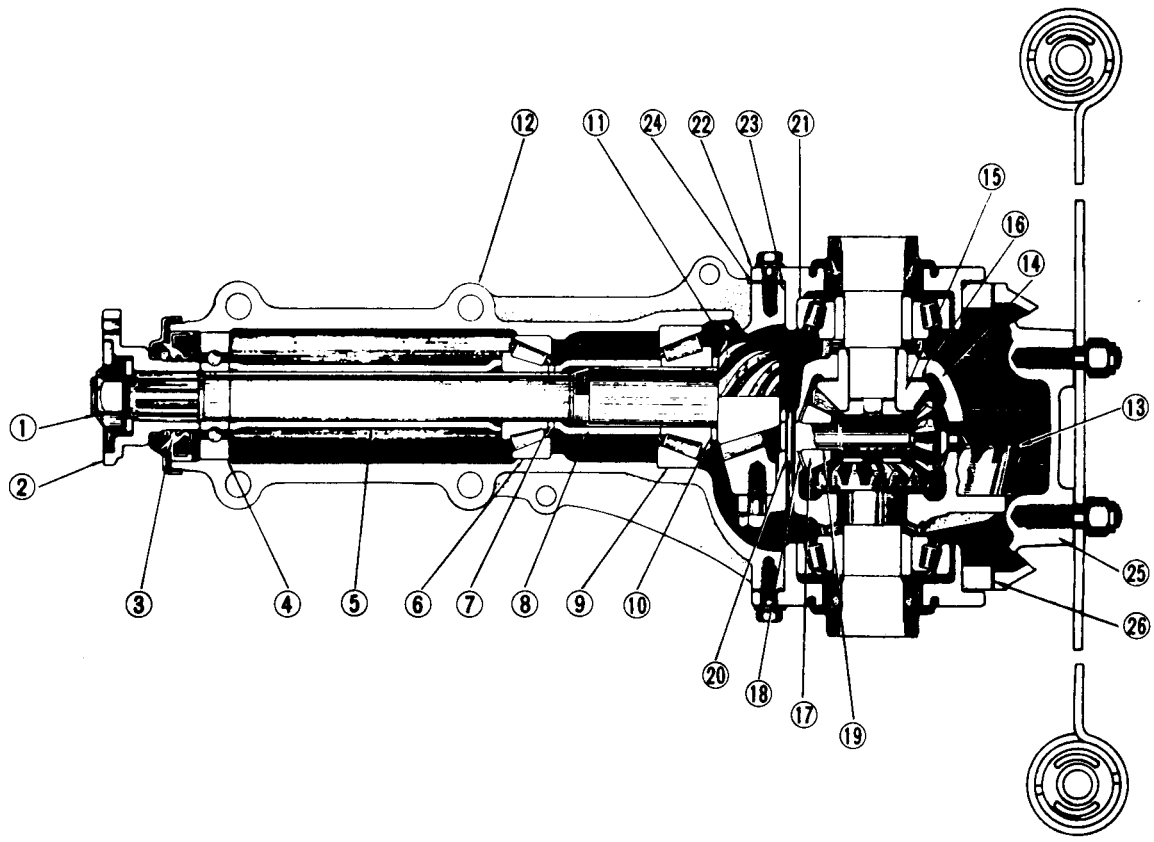

L3-049

1 Drive pinion nut
2 Companion flange
3 Front oil seal
4 Pilot bearing
5 Spacer
6 Front bearing
7 Bearing preload adjusting washer
8 Bearing preload adjusting spacer
9 Rear bearing
10 Pinion height adjusting washer
11 Drive pinion
12 Differential carrier
13 Drive gear
14 Differential case
15 Side gear
16 Side gear thrust washer
17 Pinion mate gear
18 Pinion mate gear washer
19 Pinion mate shaft
20 Pinion shaft lock pin
21 Side bearing
22 Side bearing retainer
23 Side bearing retainer O-ring
24 Side bearing retainer shim
25 Rear cover
26 Rear cover gasket

Fig. 2

Limited Slip Differential (LSD)

Outline

The LSD (Limited Slip Differential) is installed on the rear differential of four-wheel drive vehicles, improving running performance on rough roads. It permits the inner and outer wheels to rotate different amounts when turns are made, just as in general differentials. In addition, the LSD provides the following features:

1) When one front and one rear wheel, diagonal to each other, slip on snow-covered roads and driving force cannot be delivered, or when one rear wheel is caught in a ditch and runs idle, the LSD delivers strong torque to the other wheel so that the vehicle can run normally.

2) Even if the vehicle bumps with one rear wheel off the road such as when driving on rough terrain, gravel or snow-covered roads, the LSD assures easy straightforward drive-ability by its limited differential function.

The LSD uses two units of friction clutch to join the right and left rear axle shafts to the differential case, and is built into the differential case.

a. Even though a noise may be heard while steering, it is not faulty.

b. Never turn on the engine while the tire on one side is jacked up as the vehicle may start to move.

c. If the tire on one side is in the mud and the tire is spinning, the vehicle can get out of the mud by depressing the accelerator pedal. To keep the engine running at a high speed adversely affects the LSD and should be avoided.

d. If, in an emergency, a different sized tire (temporary tire, etc.) is used for the rear tire, it adversely affects the LSD. It is necessary to replace that tire with the same sized tire immediately.

Structure

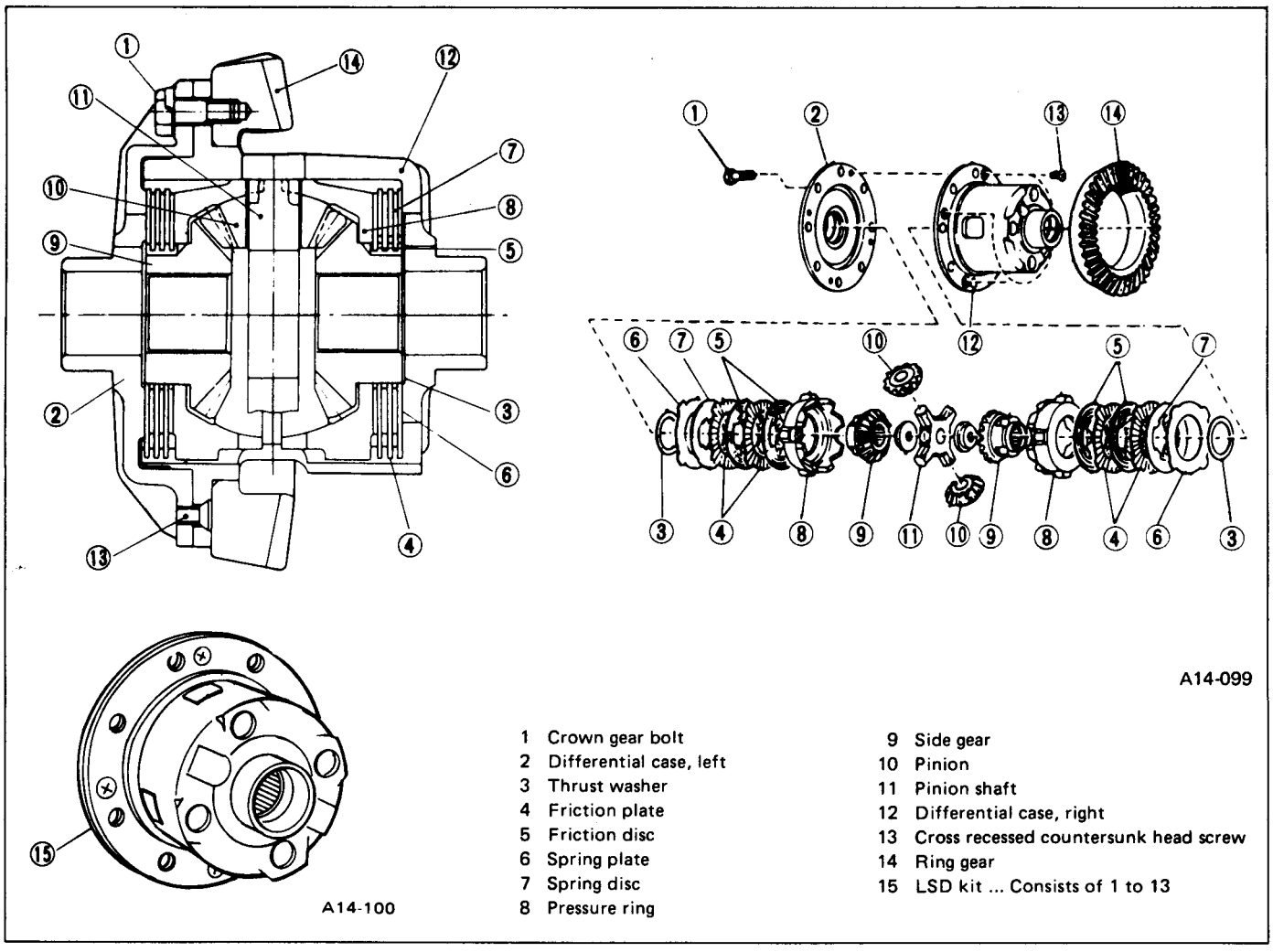

1 Crown gear bolt
2 Differential case, left
3 Thrust washer
4 Friction plate
5 Friction disc
6 Spring plate
7 Spring disc
8 Pressure ring
9 Side gear
10 Pinion
11 Pinion shaft
12 Differential case, right
13 Cross recessed countersunk head screw
14 Ring gear
15 LSD kit ... Consists of 1 to 13

Fig. 3

The LSD uses the type called "LOK-O-MATIC" and consists of V-shaped cams and a multiple disc clutch.
The cross pinion shaft ⑪ with V-shaped cams at the tips is supported by the V-shaped grooves provided in the pressure ring ⑧. The pressure ring ⑧ is fitted into the grooves in the differential case ⑫ by means of four peripheral lugs so that it can slide in the axial direction. Further, the pinions ⑩ and side gear ⑨ are meshed with one another inside the pressure ring.
The friction plates ④ and spring plate ⑥, each having four peripheral lugs to be fitted into the differential case ⑫, and the friction discs ⑤ and spring disc ⑦, each having four inner lugs to be fitted on the side gear ⑨ are placed alternately as shown in figure so that they can slide in the axial direction. All these parts are combined to form a clutch.
The spring plate ⑥ and spring disc ⑦ function as a coned disc spring and produce initial torque. To adjust the axial clearance, the thrust washers ③ are inserted between the side gears ⑨ and differential cases ② and ⑫. With this arrangement, thrust of the side gears is prevented from acting on the pressure ring.

Operation

1) PRINCIPLE OF OPERATION

The load required for the clutch to couple the differential case with the side gears is produced on the contact surfaces between the V-shaped cams of the pinion shaft and the pressure rings' V-shaped cuts. This load is proportional in size to the torque transmitted from the differential case.

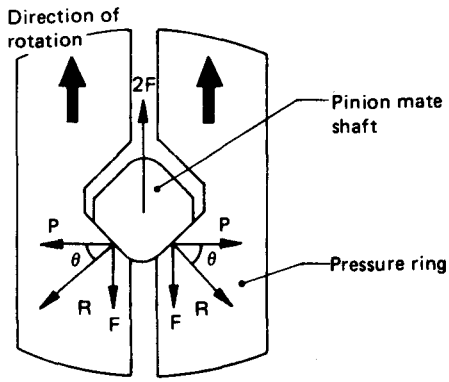

F: Reaction force produced when pressure ring rotates pinion shaft in direction of rotation.
P: Axial reaction force that pressure ring receives from pinion shaft; it acts as clutch load.

A14-101

Fig. 4

Torque of the differential case is delivered to the pressure ring linked to the differential case through four lugs and thus they turn together. When the pressure ring is going to rotate in the direction of the arrows in Fig. 4, torque is transmitted to the pinion shaft supported by the V-shaped cams, and the pressure ring receives its reaction force. This reaction force pushes the pressure ring open right and left and acts as the pressing load in the multiple disc clutch.

$$P = F \cot \theta$$

Since θ is constant, the clutching load P is proportional to F or the torque of the differential case.

2) OPERATIONS IN VARIOUS RUNNING CONDITIONS

1) When right and left wheels turn at equal speed
During normal straight-road driving where the right and left wheels run at an equal speed, the differential case and side gears rotate together, just as in conventional differentials. As a result, driving torque is transmitted equally to the right and left side gears.

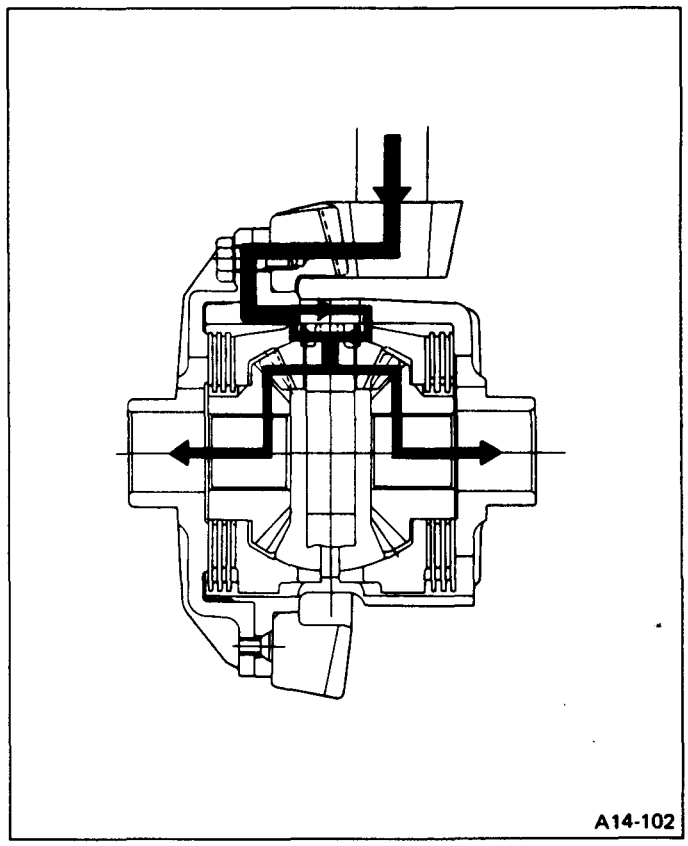

A14-102

Fig. 5

2) When right and left wheels turn at different speeds
In conventional differentials, if one wheel slips in the mud, it causes a considerable decrease in the friction between the wheel and road surface and therefore in the transfer torque.

The conventional differential always delivers the same amount of torque to each wheel. If one wheel slips, the other wheel loses driving torque.
On the other hand, in the limited slip differential, if the right wheel slips, as shown in Fig. 6, the right side gear tends to turn faster than the differential case. However, because the clutch holds the right side gear in a braked state, a portion of torque is transmitted from the right side gear to the differential case through the clutch, as shown by the broken line. In the other nonslipping wheel, while the left side gear rotates at low speed, the differential case turns at high speed. Thus, torque is delivered from the differential case to the left side gear through the clutch.

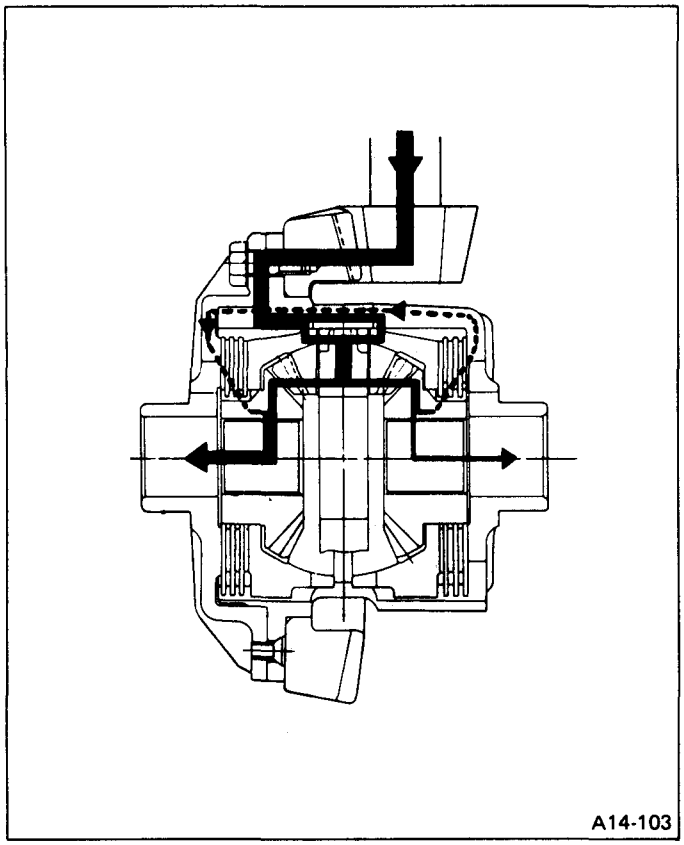

Fig. 6

As a result, in addition to the torque delivered to the left side gear from the pinions, an additional amount of torque is transmitted to the left side gear which flows from the right side gear via the clutch, differential case, left clutch and left side gear in the order named. Given that torque in the direction in which the differential case turns is plus and that in the reverse direction is minus, the amount of torque delivered to the low-speed wheel, T_L, is calculated by:

T_L = (+ Side gear torque) + (+ Clutch torque) = $T_D + T_C$

The amount of torque delivered to the high-speed wheel, T_S, is given by:

T_S = (+ Side gear torque) + (− Clutch torque) = $T_D - T_C$

Therefore, more torque is transmitted to the slower turning wheel than to the faster wheel.

Torque Ratio of Right to Left Wheels

If one wheel slips, it causes a difference between the slipping and non-slipping wheels in the amount of torque transmitted to them. However, the torque ratio between the two wheels in this case is constant and called a "transfer ratio". This transfer ratio is expressed by the following equation:

$$Rt = \frac{T_L}{T_S}$$

Rt : Transfer ratio
T_L : Low-speed wheel torque
T_S : High-speed wheel torque

Transfer ratio is indicated by a value based on the ratio of the low-speed wheel torque to the high-speed wheel torque.
Because the conventional differential delivers an equal amount of torque to each wheel, the transfer ratio Rt is 1.
In LSD, the transfer ratio, $1 < Rt < \infty$, can be obtained by selecting the clutch coefficient that determines the torque amount of the clutch.

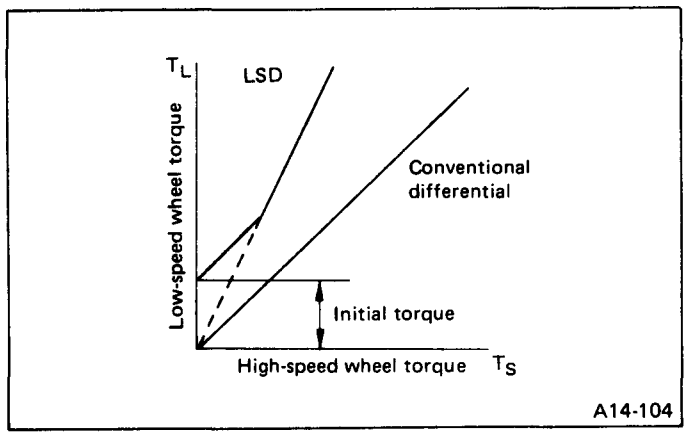

Fig. 7

Oil

Use only genuine SUBARU LSD oil to obtain the best performance from the LSD.

SUBARU LSD oil
(Showa Sekiyu LSD oil #90)
Part No. 003304300

Service Procedures for LSD

The component parts of LSD kit (See Fig. 3) are not available as piece parts.
Therefore, it is not recommended to disassemble LSD kit.

SPECIFICATIONS AND SERVICE DATA

SPECIFICATIONS

- **Rear final reduction gear ratio**

Engine model	1800	2700	
		AT	MT
Type of gear	Hypoid		
Gear ratio (Number of gear teeth)	3.700 (37/10)	3.700 (37/10)	3.900 (39/10)

- **Propeller shaft**

Engine model			1800	2700
Type			Standard 3-joint type	Vibration-proof, 3-joint type
Joint-to-joint length mm (in)		1st shaft, ℓ1	621 (24.45)	621 (24.45) . . . MT 501 (19.72) . . . AT
		2nd shaft, ℓ 2	744 (29.29)	
Outside dia. of tube x thickness mm (in)		1st shaft	63.5 x 1.6 (2.500 x 0.063)	
		2nd shaft	50.8 x 2.3 (2.000 x 0.091)	
Sleeve yoke	Type		Involute spline	
	O.D. x No. of teeth x module		25 mm (0.98 in) x 24 x 1.0	

Standard 3-joint type

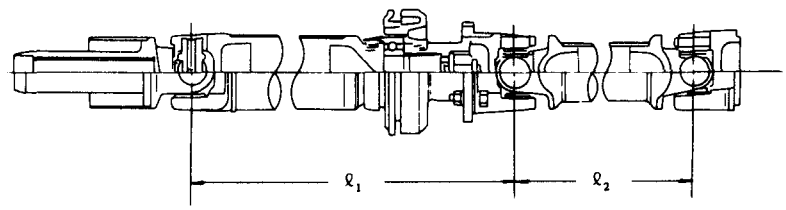

L3-075

Fig. 8

Vibration-proof, 3-joint type

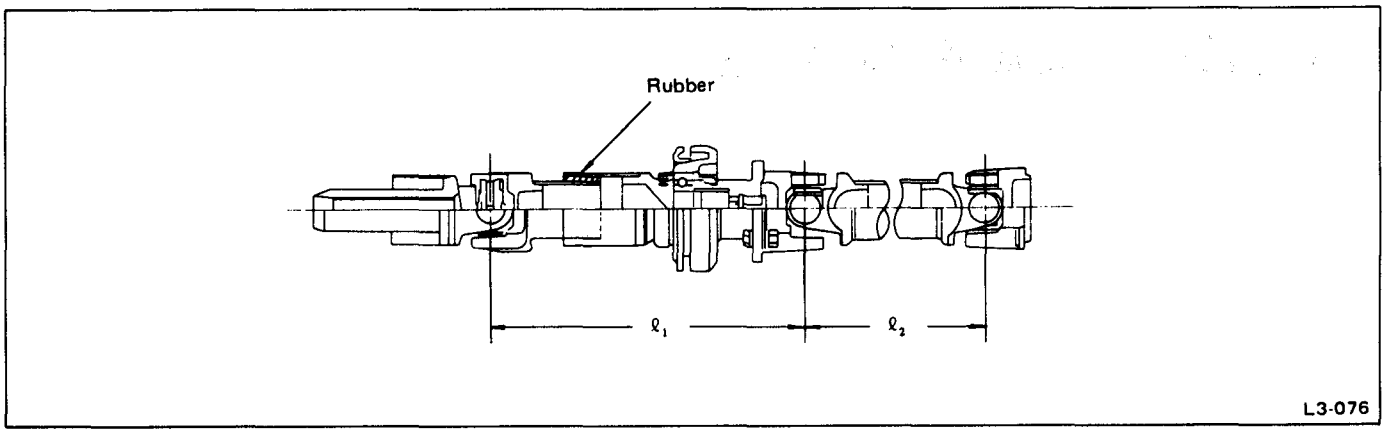

Fig. 9

- **Drive shaft**

Engine model	Joint size	Shaft dia. D	Distance between boots, L
1800	82AC	22 mm (0.87 in)	223.5 mm (8.80 in)
2700	87AC	22.2 mm (0.874 in)	223.2 mm (8.79 in)

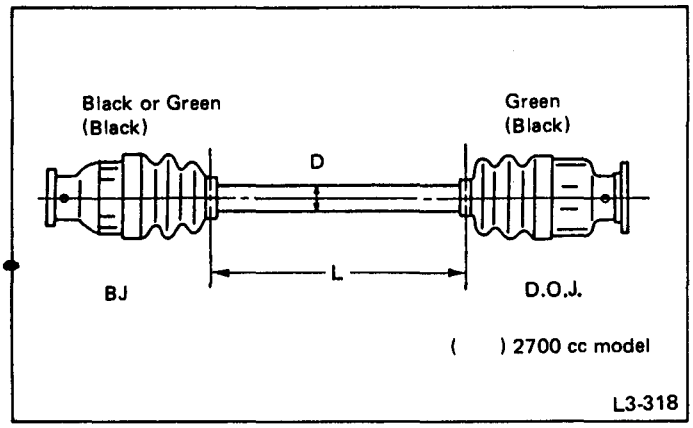

Fig. 10

SERVICE DATA

Rear differential	Front & rear bearing preload at companion flange bolt hole	New bearing	19.6 – 28.4 N (2.0 – 2.9 kg, 4.4 – 6.4 lb)
		Used bearing	8.34 – 16.67 N (0.85 – 1.7 kg, 1.87 – 3.75 lb)
	Preload adjusting washer length	Part No.	
		383705200	2.59 mm (0.1020 in)
		383715200	2.57 mm (0.1012 in)
		383725200	2.55 mm (0.1004 in)
		383735200	2.53 mm (0.0996 in)
		383745200	2.51 mm (0.0988 in)
		383755200	2.49 mm (0.0980 in)
		383765200	2.47 mm (0.0972 in)
		383775200	2.45 mm (0.0965 in)
		383785200	2.43 mm (0.0957 in)
		383795200	2.41 mm (0.0949 in)
		383805200	2.39 mm (0.0941 in)
		383815200	2.37 mm (0.0933 in)
		383825200	2.35 mm (0.0925 in)
		383835200	2.33 mm (0.0917 in)
		383845200	2.31 mm (0.0909 in)
	Preload adjusting spacer length	Part No.	
		383695201	56.2 mm (2.213 in)
		383695202	56.4 mm (2.220 in)
		383695203	56.6 mm (2.228 in)
		383695204	56.8 mm (2.236 in)
		383695205	57.0 mm (2.244 in)
		383695206	57.2 mm (2.252 in)
	Pinion height adjusting washer thickness	Part No.	
		383495200	3.09 mm (0.1217 in)
		383505200	3.12 mm (0.1228 in)
		383515200	3.15 mm (0.1240 in)
		383525200	3.18 mm (0.1252 in)
		383535200	3.21 mm (0.1264 in)
		383545200	3.24 mm (0.1276 in)
		383555200	3.27 mm (0.1287 in)
		383565200	3.30 mm (0.1299 in)
		383575200	3.33 mm (0.1311 in)
		383585200	3.36 mm (0.1323 in)
		383595200	3.39 mm (0.1335 in)
		383605200	3.42 mm (0.1346 in)
		383615200	3.45 mm (0.1358 in)
		383625200	3.48 mm (0.1370 in)

Rear differential (continued)		383635200	3.51 mm (0.1382 in)
		383645200	3.54 mm (0.1394 in)
		383655200	3.57 mm (0.1406 in)
		383665200	3.60 mm (0.1417 in)
		383675200	3.63 mm (0.1429 in)
		383685200	3.66 mm (0.1441 in)
	Side gear to thrust washer clearance		0.1 – 0.2 mm (0.004 – 0.008 in)
	Side gear thrust washer thickness	Part No.	
		383445201	0.75 – 0.80 mm (0.0295 – 0.0315 in)
		383445202	0.80 – 0.85 mm (0.0315 – 0.0335 in)
		383445203	0.85 – 0.90 mm (0.0335 – 0.0354 in)
	Side bearing standard width		20.00 mm (0.7874 in)
	Side bearing retainer shim thickness	Part No.	
		383475201	0.20 mm (0.0079 in)
		383475202	0.25 mm (0.0098 in)
		383475203	0.30 mm (0.0118 in)
		383475204	0.40 mm (0.0157 in)
		383475205	0.50 mm (0.0197 in)
	Drive gear to drive pinion backlash		0.10 – 0.20 mm (0.0039 – 0.0079 in)
	Drive gear runout on its back surface	Limit	0.05 mm (0.0020 in)
	Oil capacity		0.8ℓ (1.7 US pt, 1.4 Imp pt)

COMPONENT PARTS

Rear Differential Mounting System

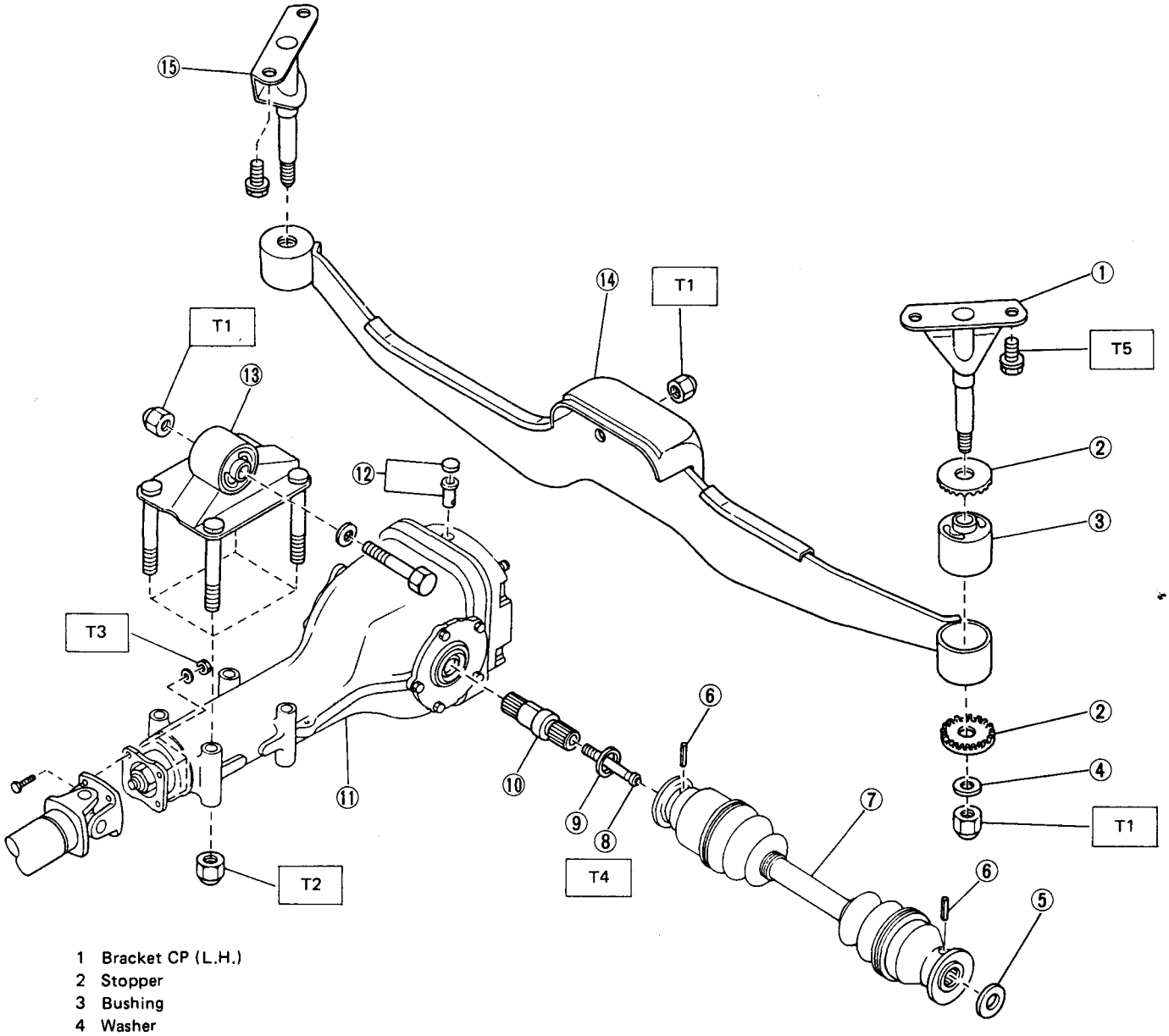

1 Bracket CP (L.H.)
2 Stopper
3 Bushing
4 Washer
5 Packing
6 Spring pin
7 Drive shaft ASSY
8 Bolt CP
9 Packing
10 Spindle
11 Differential ASSY
12 Breather cap
13 Bracket ASSY
14 Differential mount member ASSY
15 Bracket CP (R.H.)

Tightening torque: N·m (kg-m, ft-lb)

T1: 69 – 78 (7 – 8, 51 – 58)
T2: 44 – 54 (4.5 – 5.5, 33 – 40)
T3: 24 – 32 (2.4 – 3.3, 17 – 24)
T4: 31 – 36 (3.2 – 3.7, 23 – 27)
T5: 39 – 49 (4 – 5, 29 – 36)

Fig. 11 L3-455

Propeller Shaft and Drive Shaft

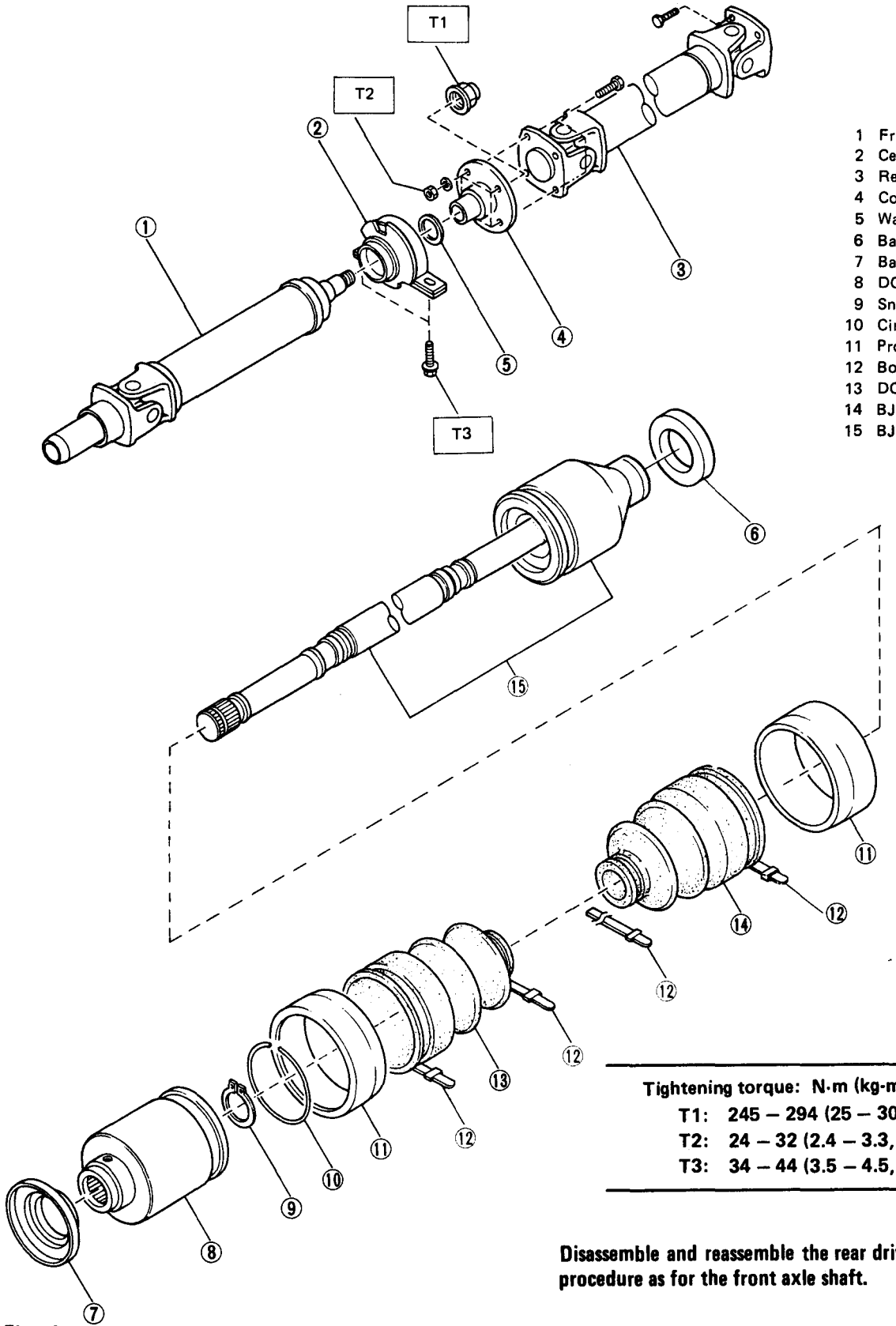

1 Front propeller shaft ASSY
2 Center bearing ASSY
3 Rear propeller shaft ASSY
4 Companion flange
5 Washer
6 Baffle plate (BJ side)
7 Baffle plate (DOJ side)
8 DOJ ASSY
9 Snap ring
10 Circlip
11 Protector
12 Boot band
13 DOJ boot
14 BJ boot
15 BJ & shaft unit

Tightening torque: N·m (kg-m, ft-lb)
T1: 245 – 294 (25 – 30, 181 – 217)
T2: 24 – 32 (2.4 – 3.3, 17 – 24)
T3: 34 – 44 (3.5 – 4.5, 25 – 33)

Disassemble and reassemble the rear drive shaft using the same procedure as for the front axle shaft.

Fig. 12

L3-456

Rear Differential Assembly

* Selective parts

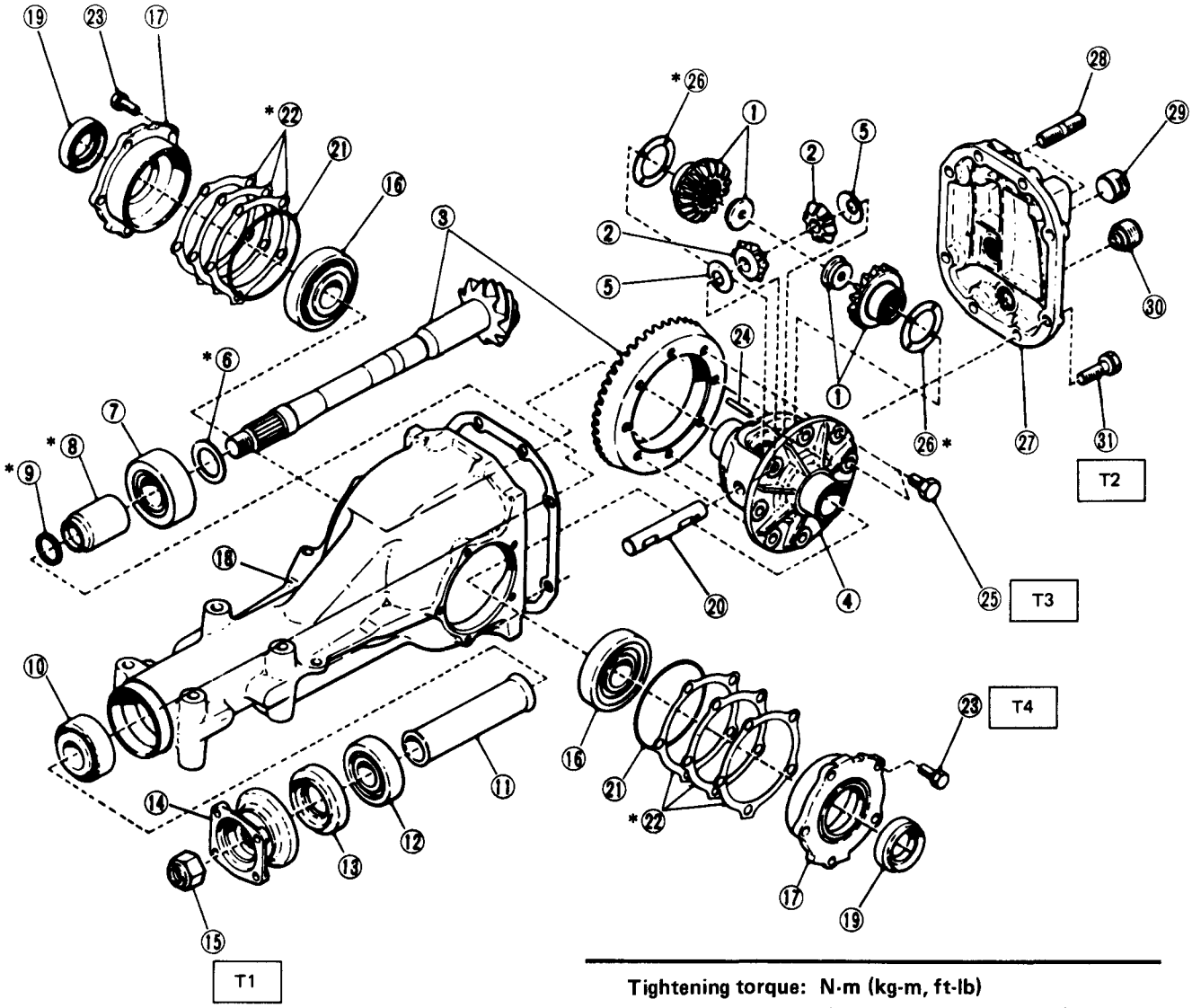

Tightening torque: N·m (kg-m, ft-lb)

T1: 167 – 196 (17.0 – 20.0, 123 – 145)
T2: 19 – 25 (1.9 – 2.6, 14 – 19)
T3: 93 – 113 (9.5 – 11.5, 69 – 83)
T4: 9 – 12 (0.9 – 1.2, 6.5 – 8.7)

1 Side gear
2 Pinion mate gear
3 Pinion crown gear set
4 Differential case
5 Pinion mate gear washer
*6 Pinion height adjusting washer
7 Rear bearing
*8 Bearing preload adjusting spacer
*9 Bearing preload adjusting washer
10 Front bearing
11 Spacer
12 Pilot bearing
13 Front oil seal
14 Companion flange
15 Self-locking nut
16 Side bearing
17 Side bearing retainer
18 Differential carrier
19 Side oil seal
20 Pinion mate shaft
21 Side bearing retainer O-ring
*22 Side bearing retainer shim
23 Bolt (8x20x14 mm)
24 Pinion shaft lock pin
25 Bolt (11x18x11 mm)
*26 Side gear thrust washer
27 Rear cover
28 Stud bolt
29 Plug
30 Plug CP
31 Bolt (10x30x18 mm)

Fig. 13

L3-848

SERVICE PROCEDURE

Propeller Shaft

Check the following points with propeller shaft installed in vehicle.

1) Joints and connections

Check for looseness.

2) Splines and bearing locations

(1) Turn propeller shaft by hand to see if abnormal free play exists at splines. Also move yokes to see if abnormal free play exists at spiders and bearings.

(2) Turn rear wheels by hand to check for "runout" of propeller shaft.

REMOVAL

1) Remove the four bolts which hold propeller shaft to rear differential.

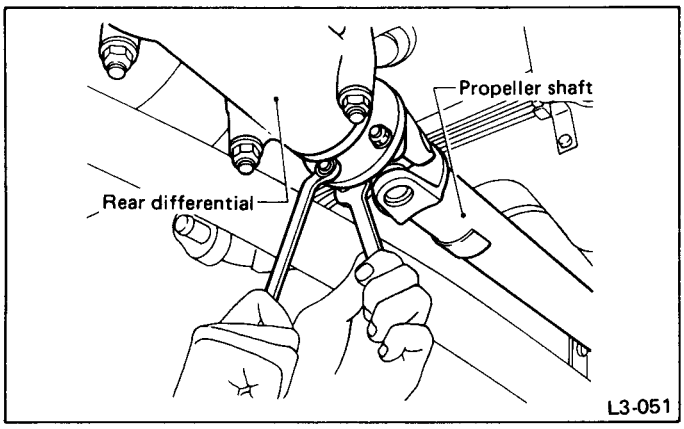

Fig. 14

2) Remove the two bolts which hold center bearing to car body.

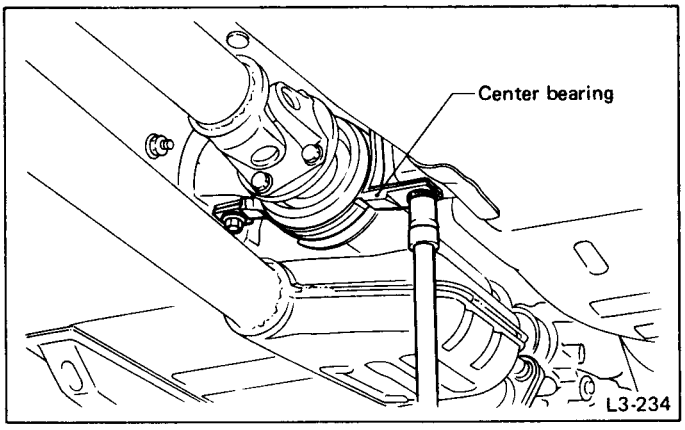

Fig. 15

3) Remove propeller shaft from transmission.

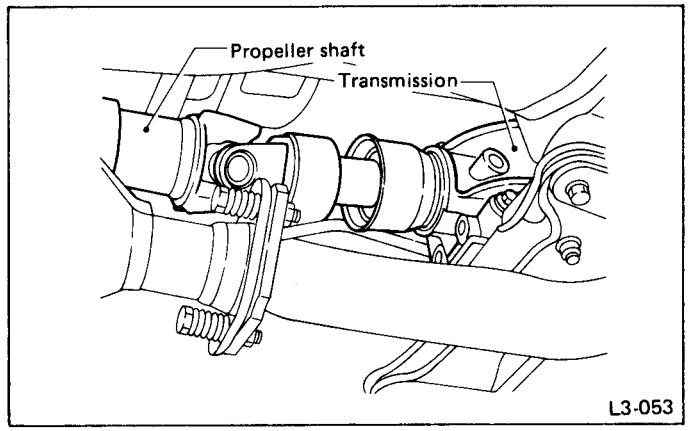

Fig. 16

a. Be sure to use an empty oil can to catch oil flowing out when removing propeller shaft.

b. Be sure not to damage oil seals and the frictional surface of sleeve yoke.

c. Be sure to plug the opening in transmission after removal of propeller shaft.

DISASSEMBLY

Before removing center bearing, check its condition. If it does not operate smoothly or if there is any free play or leakage, remove as follows:

1) Put aligning marks on affected parts.

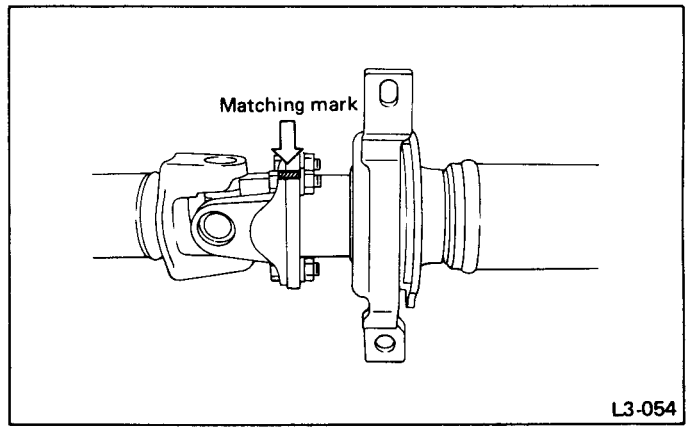

Fig. 17

2) Remove bolts which hold front propeller shaft to rear propeller shaft.

3) Place companion flange in a vise and remove stake nut.

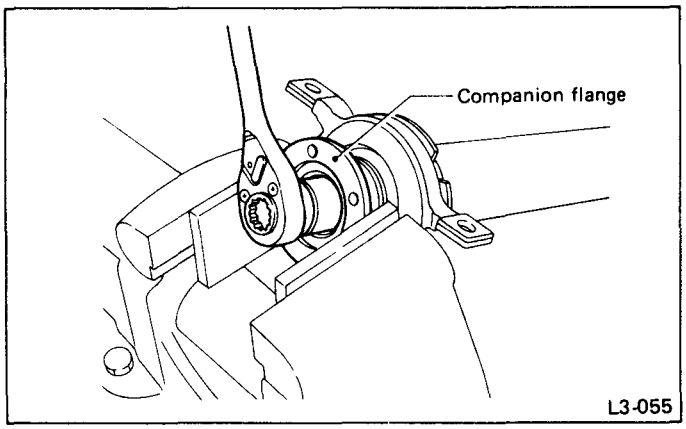

Fig. 18

Be sure not to hold propeller shaft pipe portion in the vise.

4) Drive out companion flange with a puller or press.

Before disassembling, put aligning mark on affected parts.

5) Lightly tap the head of front shaft with a copper hammer until center bearing is removed.

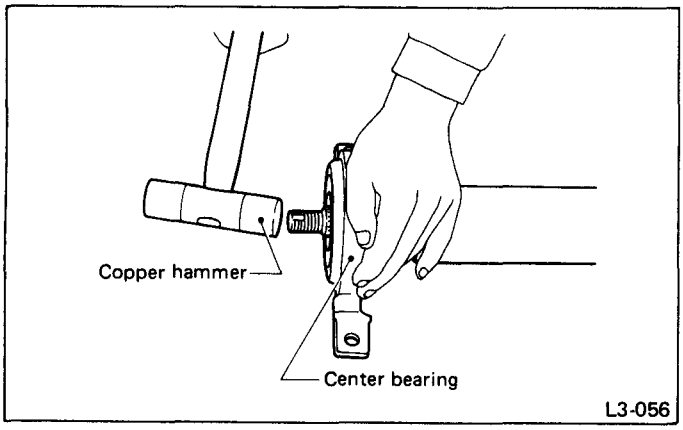

Fig. 19

Be careful not to damage the thread portion.

INSPECTION

Check the following and replace faulty parts if necessary.
- Tube surfaces for dents or cracks
- Splines for deformation or abnormal wear
- Tubes for runout exceeding 0.6 mm (0.024 in)

Measure runout with a dial gauge at the center of front and rear shaft tubes.

- Joints for unsmooth operation or abnormal noise
- Center bearing for free play, noise or unsmooth operation
- Oil seals for abnormal wear or damage

INSTALLATION

1) Install center bearing onto front propeller shaft.
2) Install washer to center bearing.

Apply a coat of grease to both surfaces of washer before installation.

Recommended grease:
Molybdenum disulfide grease

3) Align marks and install companion flange.
4) Tighten stake nut until center bearing is set in position.

Be sure to install new stake nut.

Tightening torque:
245 – 294 N·m (25 – 30 kg-m, 181 – 217 ft-lb)

Stake the nut after tightening.

5) Align marks and connect front and rear shafts.

Tightening torque:
24 – 32 N·m (2.4 – 3.3 kg-m, 17 – 24 ft-lb)

6) Insert sleeve yoke into transmission and attach center bearing to car body.

Tightening torque:
34 – 44 N·m (3.5 – 4.5 kg-m, 25 – 33 ft-lb)

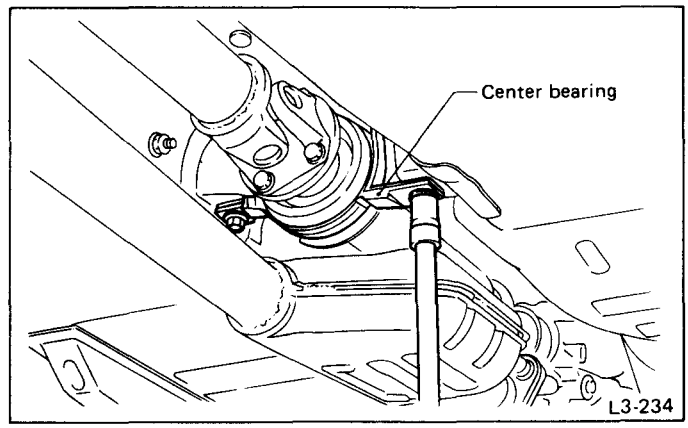

Fig. 20

7) Connect flange yoke and rear differential.

Tightening torque:
24 – 32 N·m (2.4 – 3.3 kg-m, 17 – 24 ft-lb)

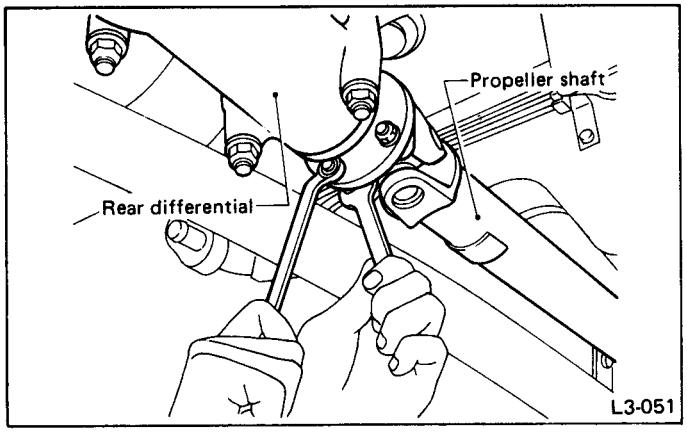

Fig. 21

On-Car Services

REPLACING FRONT OIL SEAL

1) Drain gear oil.
2) Jack up rear wheels and support the vehicle body with rigid racks.
3) Detach propeller shaft from companion flange.
4) Measure turning resistance of companion flange.

Measure turning resistance after making sure that the companion flange turns smoothly.

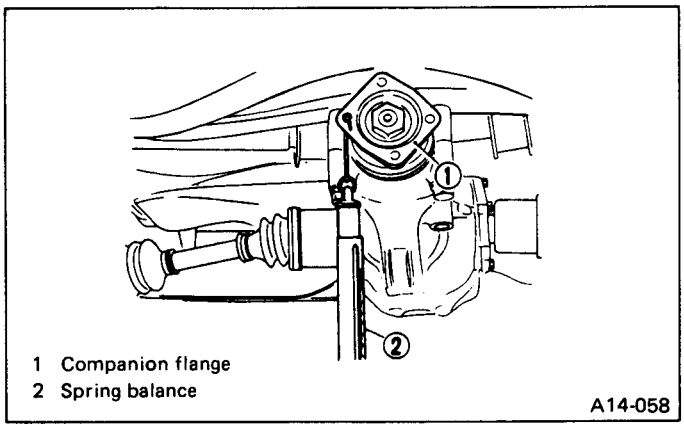

Fig. 22

5) Remove self-locking nut while holding companion flange with FLANGE WRENCH (398427700).

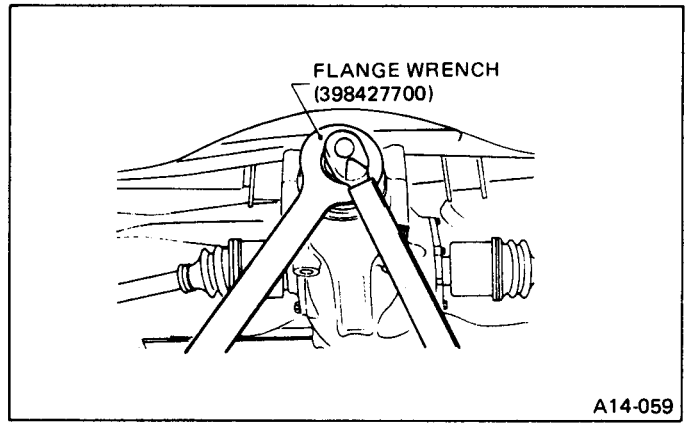

Fig. 23

6) Extract companion flange with a puller.

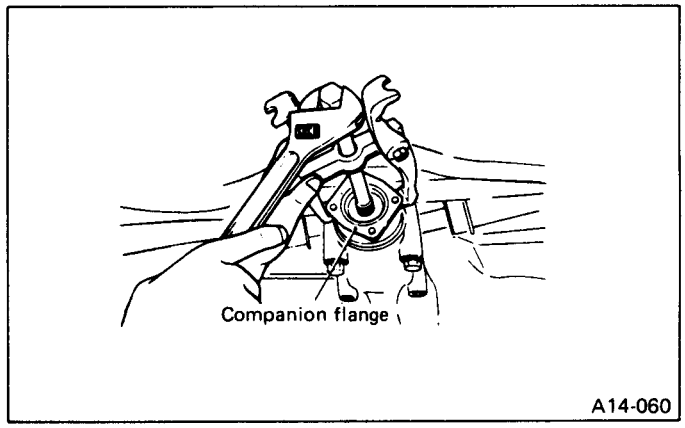

Fig. 24

7) Remove oil seal.

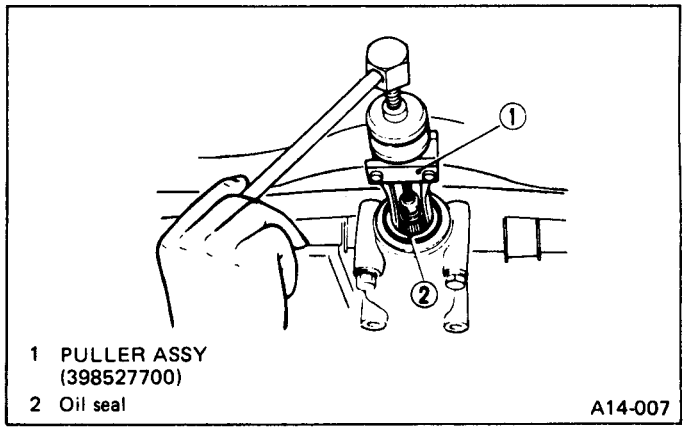

Fig. 25

8) Fit a new oil seal.

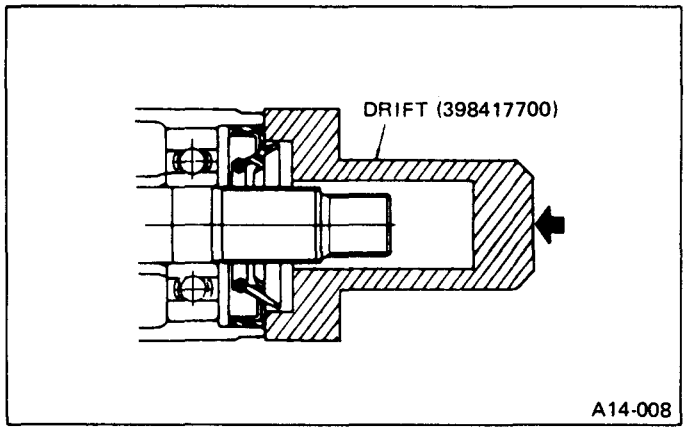

Fig. 26

9) Install companion flange.
10) Tighten self-locking nut within the specified torque range so that the turning resistance of companion flange becomes the same as that before replacing oil seal.

Torque (Drive pinion nut):
167 – 196 N·m (17.0 – 20.0 kg-m, 123 – 145 ft-lb)

11) Reassembling procedure hereafter is the reverse of the disassembling.

REPLACING SIDE OIL SEAL

1) Remove two bolts which fix the upper portion of shock absorber to the body in unladen condition.
2) Loosen both wheel nuts.
3) Jack up the vehicle and support it with rigid racks.
4) Remove wheels.
5) Drive out spring pins of BJ and DOJ by using 6 mm (0.24 in) diameter of steel rod.

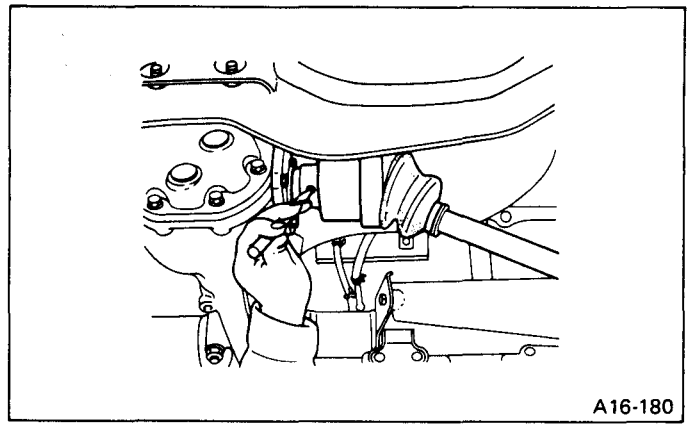

Fig. 27

6) Detach BJ from spindle of trailing arm with trailing arm lowered fully and detach DOJ from differential spindle and then remove drive shaft ASSY.
7) Loosen differential spindle set bolt by using WRENCH (925560000) and remove spindle with packing.
8) Remove oil seal.

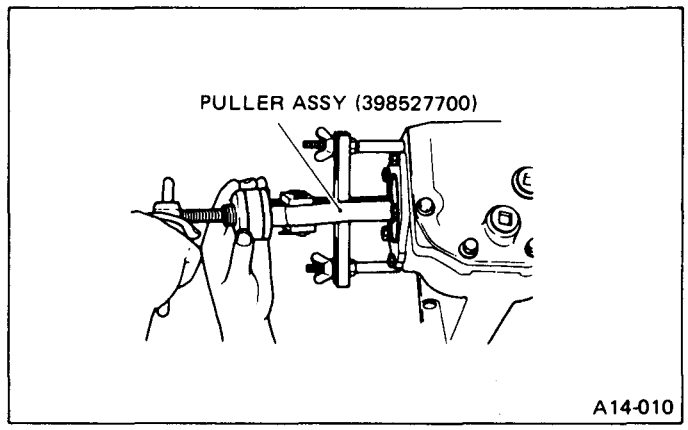

Fig. 28

9) Drive in a new oil seal with DRIFT (398437700)

Apply chassis grease between the oil seal lips.

10) Reassembling procedure hereafter is the reverse of the disassembly.

IDENTIFICATION OF REAR DIFFERENTIALS

Using the different rear differential ASSY causes the drive line and tires to "drag" or emit abnormal noise when 4WD is selected.

When replacing a rear differential ASSY, select the correct one according to the following table.

Gear ratio	Identification mark	Part number	Label stuck on rear differential
3.700	WL	722011012	PART NUMBER 722011012 GEAR RATIO 3.700 FUJI HEAVY INDUSTRIES LTD. WL
3.700 (With LSD)	WM	722011002	LSD GEAR RATIO 3.700 PART NO. 722011002 デフオイルは ATF LSDオイル を0.8ℓ注入して下さい。 [use SUBARU LSD OIL capacity 0.8ℓ (1.7 uspt 1.4 imppt)] FUJI HEAVY INDUSTRIES LTD. WM
* 3.900	WP	622006022	PART NUMBER 622006022 GEAR RATIO 3.900 FUJI HEAVY INDUSTRIES LTD. WP
* 3.900 (With LSD)	WR	22011GA022	LSD GEAR RATIO 3.900 PART NO. 22011GA022 デフオイルは ATF LSDオイル を0.8ℓ注入して下さい。 [use SUBARU LSD OIL capacity 0.8ℓ (1.7 uspt 1.4 imppt)] FUJI HEAVY INDUSTRIES LTD. WR

* 2700 cc model

L3-849

Fig. 29

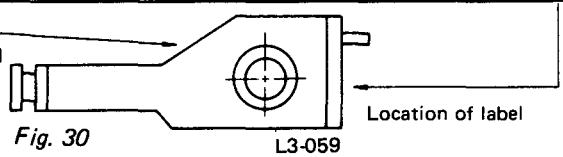

Fig. 30

L3-059

GEAR RATIOS OF REAR DIFFERENTIALS

Engine model	MT	AT	Rear differential
1800	3.700	3.700	WL or WM
2700	3.900	3.700	WL, WM, WP or WR

If the painted identification code cannot be read clearly or if the label is torn off, its type can be determined as follows:

CHECKING FOR LSD OR NON-LSD

1) Set the selective 4WD and full-time 4WD (AT) models in the FWD mode. Turn the diff. lock switch of the full-time 4WD (MT) model to OFF.

To set the full-time 4WD (AT) model in the FWD mode, install a spare fuse in the FWD fuse holder located in front of the strut on the left side of the engine compartment.

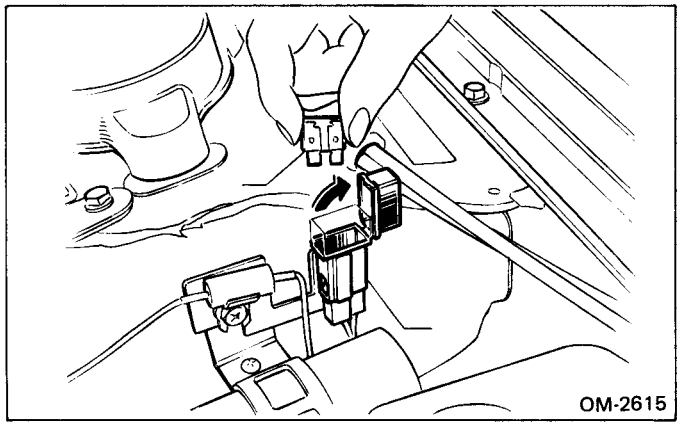

Fig. 31

2) Raise one or both rear wheels with a jack.
3) Manually turn tire to check for rotating condition of tire.
   - When one wheel is raised:
     Tire turns smoothly . . . . . Non-LSD
     Tire turns but requires considerable effort . . . . . LSD
   - When both wheels are raised:
     Both tires turn in opposite direction to each other . . . . . Non-LSD
     Both tires turn in the same direction . . . . . LSD

CHECKING FOR GEAR RATIOS

Work procedures differ between LSD and non-LSD, as follows:

1) LSD
   (1) Set the selective 4WD and full-time 4WD (AT) models in the FWD mode. Turn the diff. lock switch of the full-time 4WD (MT) model to OFF.

To set the full-time 4WD (AT) model in the FWD mode, install a spare fuse in the FWD fuse holder located in front of the strut on the left side of the engine compartment.

   (2) Raise both rear wheels, not one wheel.
   (3) Mark both tire and propeller shaft with a piece of chalk so that the number of tire rotations can be counted.
   (4) Slowly and exactly turn the tire ten complete rotations to see how many turns the propeller shaft makes.
   If propeller shaft makes 37 turns, gear ratio is 3.700.
   If it makes 39 turns, gear ratio is 3.900.
2) Non-LSD
   (1) Set the selective 4WD and full-time 4WD (AT) models in the FWD mode. Turn the diff. lock switch of the full-time 4WD (MT) model to OFF.

To set the full-time 4WD (AT) model in the FWD mode, install a spare fuse in the FWD fuse holder located in front of the strut on the left side of the engine compartment.

   (2) Raise only right rear wheel. (If both left and right wheels are raised, keep the left one stationary.)
   (3) Mark the tire's lowest position and the propeller shaft with a piece of chalk so that the number of tire rotations can be counted exactly.
   (4) Slowly turn the tire clockwise until propeller shaft rotates exactly 6 complete turns. At this point, check the location of the chalk mark on the tire.
   If the mark is at position "A" in the figure below, gear ratio is 3.700; if it is at "B", gear ratio is 3.900.

If the above procedures are followed, rear differential can also be identified as to its type and other related information.

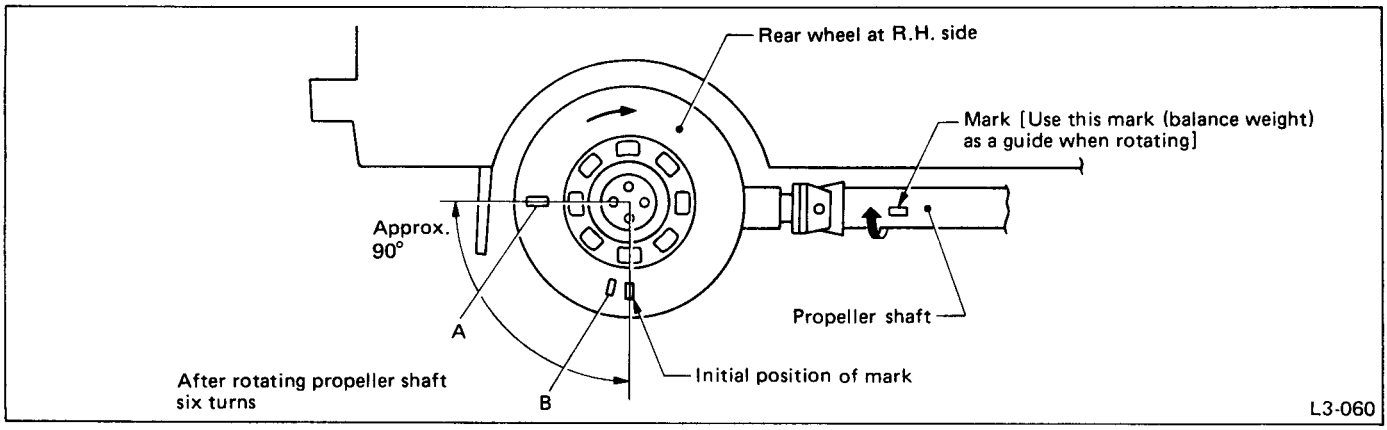

Fig. 32

Rear Differential Assembly

DISMOUNTING

1) Remove the two bolts which hold the upper end of shock absorber to car body. Car should be in an unloaded condition.
2) Loosen wheel nuts on left and right wheels.
3) Raise car with a jack and support it with a rigid rack.

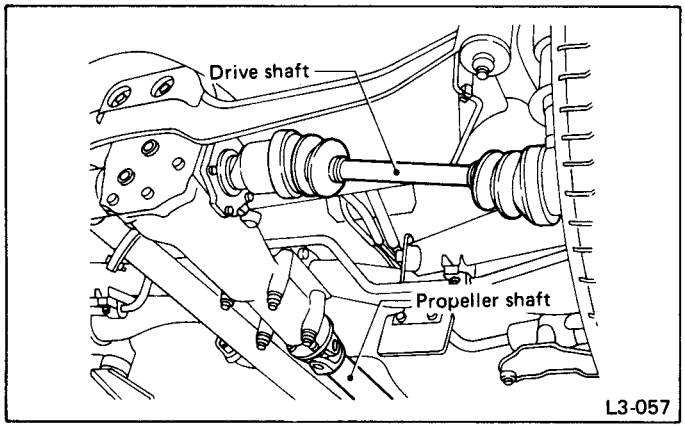

Fig. 33

4) Remove wheels.
5) Remove spring pins from DOJ and BJ with a 6 mm (0.24 in) diameter of steel rod. Next, lower trailing arm ASSY all the way; remove BJ from spindle on the trailing arm side first, then DOJ on the differential side. Remove drive shaft ASSY.
6) Remove propeller shaft ASSY.

a. Prepare an oil can and cap since the transmission oil flows out from the extension at removing propeller shaft ASSY.
b. When removing propeller shaft ASSY, pay attention not to damage the sliding surfaces of rear drive shaft (extension) spline, oil seal and sleeve yoke.
c. Insert the cap into the extension to prevent transmission oil from flowing out immediately after removing the propeller shaft ASSY.

7) Support differential assembly with jack and remove two self-locking nuts at the center of differential mount member ASSY.
8) Remove four self-locking nuts fixing differential ASSY to bracket ASSY (F).
9) Dismount differential ASSY by lowering jack.

DISASSEMBLY

1) Inspection before disassembling
To detect real cause of trouble, inspect the following items before disassembling.
(Refer to "ASSEMBLY" for inspection procedures.)
(1) Tooth contact of hypoid drive gear and pinion, and backlash.
(2) Runout of drive gear at its back surface.
(3) Turning resistance of drive pinion.
2) Disassembling
(1) Set ATTACHMENT (398217700) on vise and install the differential assembly to Attachment.

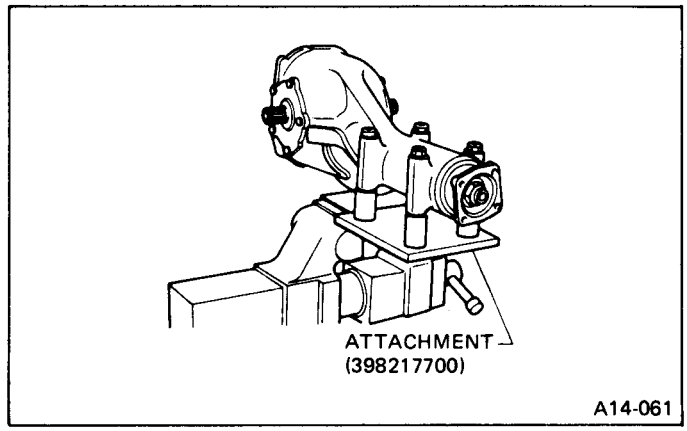

Fig. 34

(2) Drain gear oil by removing plug.
(3) Remove spindles by loosening bolts with WRENCH (925560000).
(4) Remove rear cover by loosening retaining bolts.

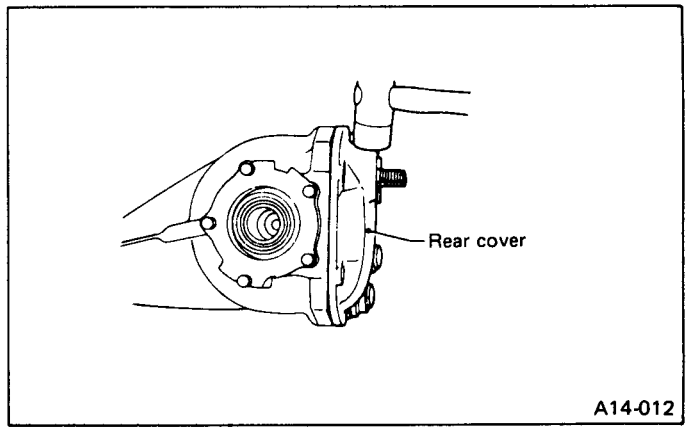

Fig. 35

(5) Mark right and left side bearing retainers in order to identify them at reassembly. Remove side bearing retainer attaching bolts, set ATTACHMENT (398457700) to differential case, and extract right and left side bearing retainers with a puller.

Each shim, which is installed to adjust the side bearing preload, should be kept together with its mating retainer.

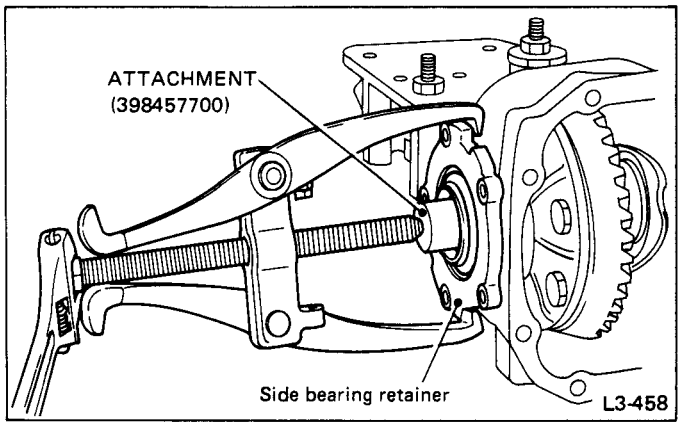

Fig. 36

(6) Pull out differential case.

Be careful not to permit the teeth to contact the case.

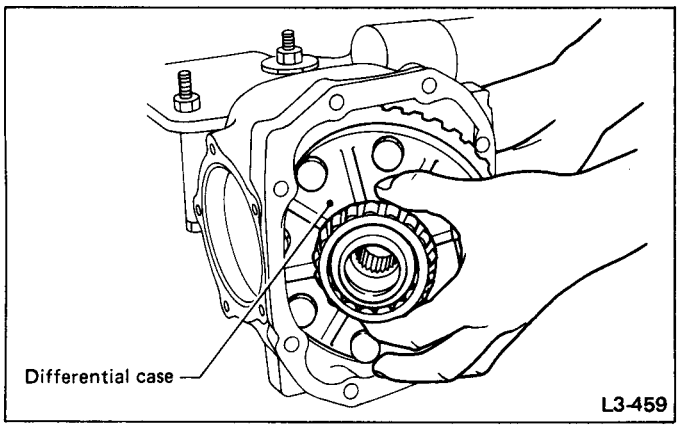

Fig. 37

(7) When replacing side bearing, pull bearing cup from side bearing retainer.

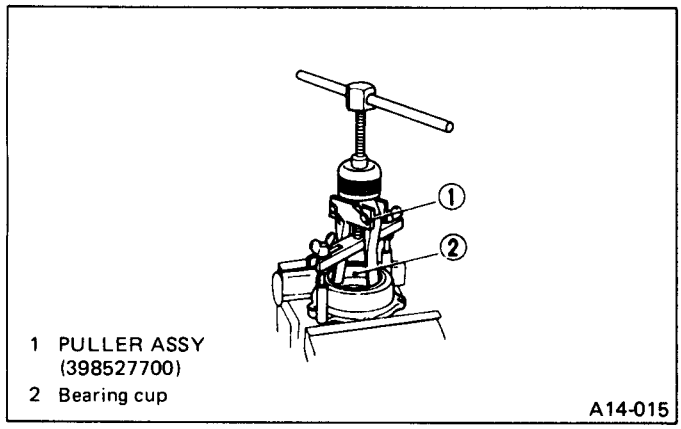

Fig. 38

(8) Extract bearing cone with PULLER SET (399527700).

a. Set Puller so that its claws catch the edge of the bearing cone.
b. Never mix up the right and left hand bearing cups and cones.
Do not attempt to disassemble the parts unless necessary.

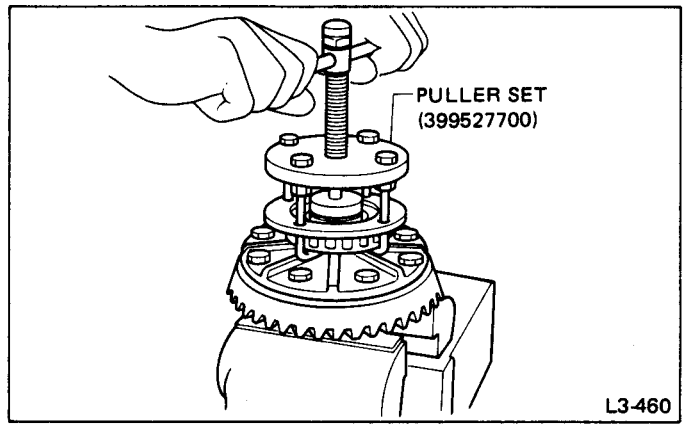

Fig. 39

(9) Remove drive gear by loosening drive gear bolts.

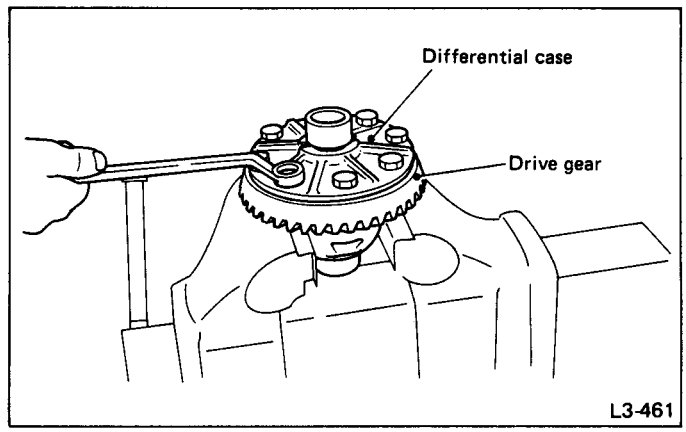

Fig. 40

(10) Drive out pinion shaft lock pin from drive gear side.

The lock pin is staked at the pin hole end on the differential case; do not drive it out forcibly before unstaking it.

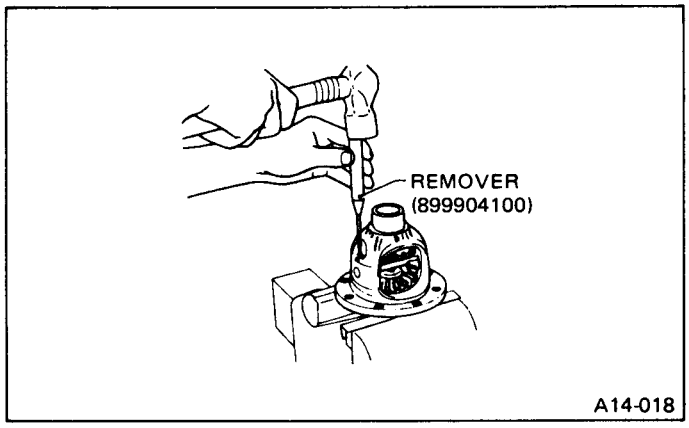

Fig. 41

(11) Draw out pinion mate shaft and remove pinion mate gears, side gears and thrust washers.

The gears as well as thrust washers should be marked or kept separated left and right, and front and rear.

(12) Hold companion flange with FLANGE WRENCH (398427700) and remove drive pinion nut.
(13) Extract the companion flange with a puller.
(14) Press the end of drive pinion shaft and extract it together with rear bearing cone, preload adjusting spacer and washer.

Hold the drive pinion so as not to drop it.

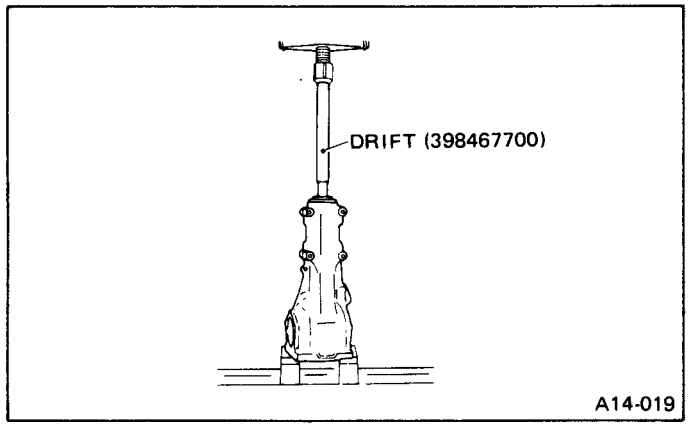

Fig. 42

(15) Remove rear bearing cone from drive pinion by supporting cone with REPLACER (398517700).

Place the replacer so that its center-recessed side faces the pinion gear.

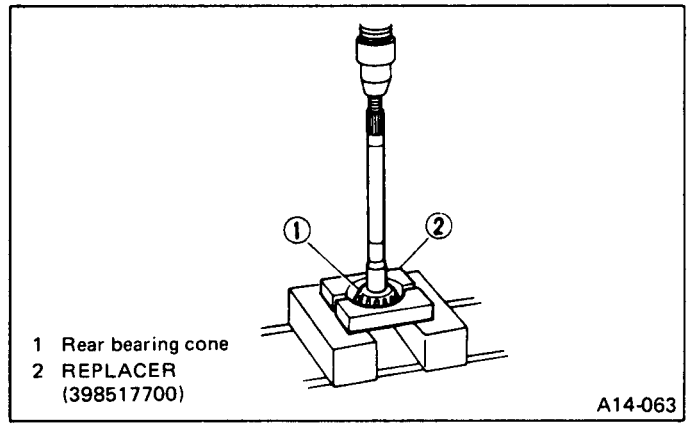

Fig. 43

(16) Remove front oil seal from differential carrier.
(17) Remove pilot bearing together with front bearing cone.

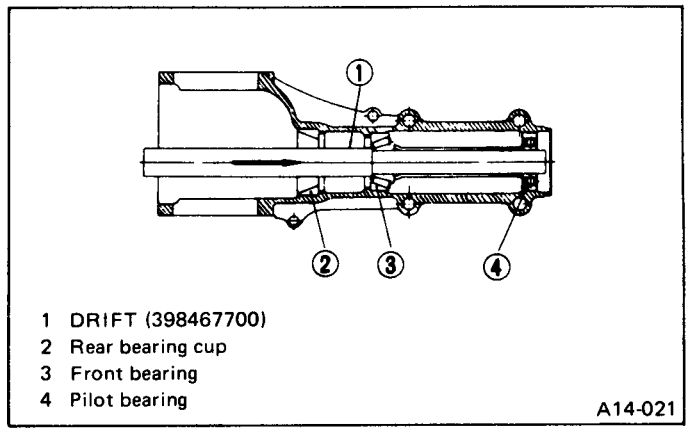

Fig. 44

(18) When replacing bearings, tap front bearing cup and rear bearing cup in this order out of case by using a brass bar.

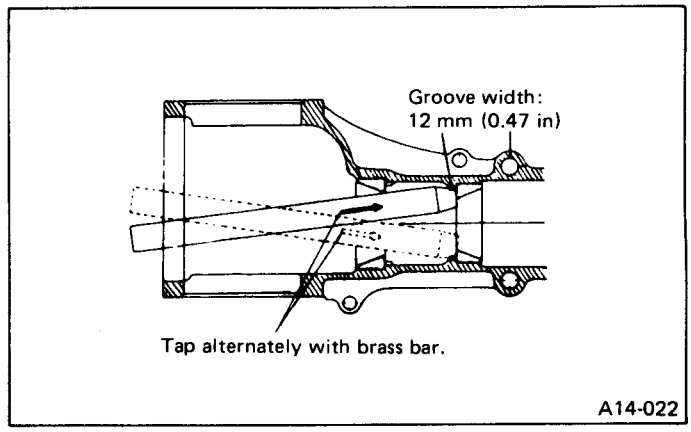

Fig. 45

INSPECTION

Wash all the disassembled parts clean, and examine them for wear, damage, or other defects. Repair or replace defective parts as necessary.

1) Drive gear and drive pinion
   (1) If abnormal tooth contact is evident, find out the cause and adjust to give correct tooth contact at assembly. Replace the gear if excessively worn or incapable of adjustment.
   (2) If crack, score, or seizure is evident, replace as a set. Slight damage of tooth can be corrected by oil stone or the like.
2) Side gear and pinion mate gear
   (1) Replace if crack, score, or other defects are evident on tooth surface.
   (2) Replace if thrust washer contacting surface is worn or seized. Slight damage of the surface can be corrected by oil stone or the like.
3) Bearing

Replace if seizure, peeling, wear, rust, dragging during rotation, abnormal noise or other defect is evident.

4) Thrust washers of side gear and pinion mate gear

Replace if seizure, flaw, abnormal wear or other defect is evident.

5) Oil seal

Replace if deformed or damaged, and at every disassembling.

6) Differential carrier

Replace if the bearing bores are worn or damaged.

7) Differential case

Replace if its sliding surfaces are worn or cracked.

8) Companion flange

Replace if the oil seal lip contacting surfaces have flaws.

ASSEMBLY

1) Precautions for assembling
   (1) Assemble in the reverse order of disassembling. Check and adjust each part during assembly.
   (2) Keep the shims and washers in order, so that they are not misinstalled.
   (3) Thoroughly clean the surfaces on which the shims, washers and bearings are to be installed.
   (4) Apply gear oil when installing the bearings and thrust washers.
   (5) Be careful not to mix up the right and left hand cups of the bearings.
   (6) Replace the oil seal with new one at every disassembly. Apply chassis grease between the lips (※) when installing the oil seal.

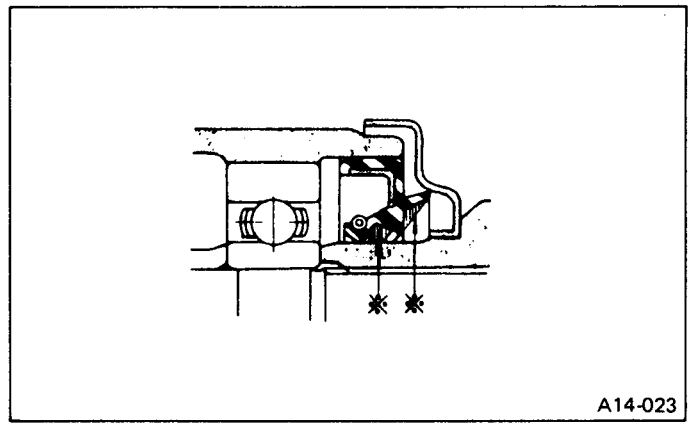

Fig. 46

2) Adjusting preload for front and rear bearings.

Adjust the bearing preload with spacer and washer between front and rear bearings. Pinion height adjusting washer has nothing to do with this adjustment. The adjustment must be carried out without oil seal.

(1) Press front and rear bearing cups into differential carrier.

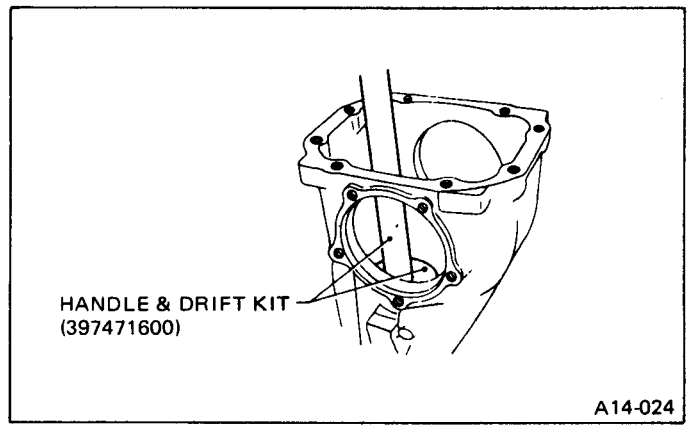

Fig. 47

(2) Insert DUMMY SHAFT (398507702) with pinion height adjusting washer and rear bearing cone fitted on it into carrier.

Reuse the used washer if they show normal tooth contact pattern when checked before disassembly.

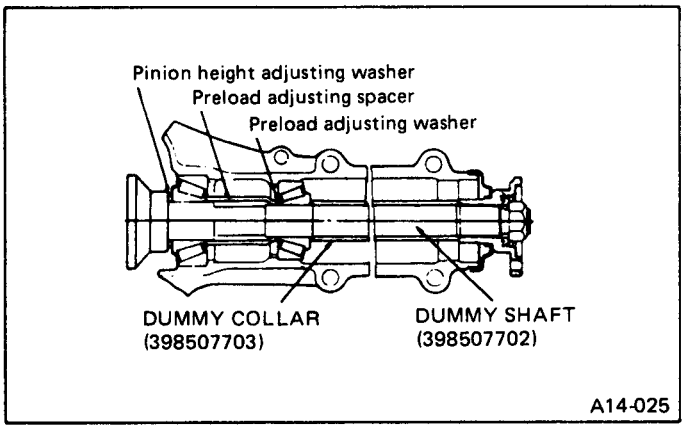

Fig. 48

(3) Then, install preload adjusting spacer and washer, front bearing cone, DUMMY COLLAR (398507703), companion flange, washer and drive pinion nut.
(4) Turn Dummy Shaft with hand to make it seated, and tighten drive pinion nut while measuring the preload with spring balance as shown in the figure. Select preload adjusting washer and spacer so that the specified preload is obtained when nut is tightened to the specified torque.

a. Be careful not to give excessive preload.
b. When tightening the drive pinion nut, lock Dummy Shaft with BLOCK (398507704) as illustrated here.

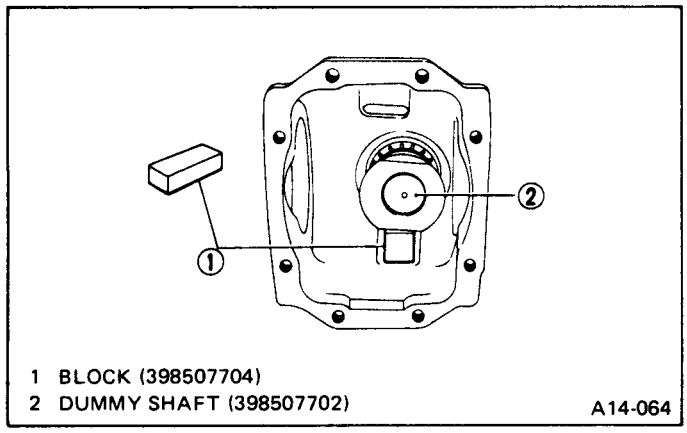

Fig. 49

Torque (Drive pinion nut):
167 – 196 N·m (17.0 – 20.0 kg-m, 123 – 145 ft-lb)

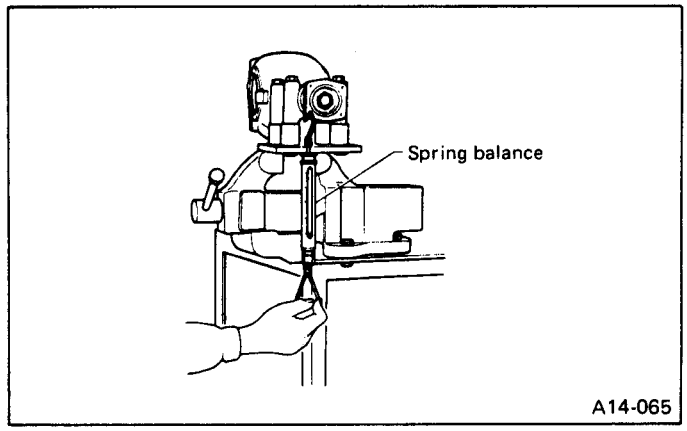

Fig. 50

Front & rear bearing preload
For new bearing: 19.6 – 28.4 N (2.0 – 2.9 kg, 4.4 – 6.4 lb) at companion flange bolt hole
For used bearing: 8.34 – 16.67 N (0.85 – 1.7 kg, 1.87 – 3.75 lb) at companion flange bolt hole

Preload adjusting washer

Part No.	Length mm (in)
383705200	2.59 (0.1020)
383715200	2.57 (0.1012)
383725200	2.55 (0.1004)
383735200	2.53 (0.0996)
383745200	2.51 (0.0988)
383755200	2.49 (0.0980)
383765200	2.47 (0.0972)
383775200	2.45 (0.0965)
383785200	2.43 (0.0957)
383795200	2.41 (0.0949)
383805200	**2.39 (0.0941)**
383815200	**2.37 (0.0933)**
383825200	2.35 (0.0925)
383835200	2.33 (0.0917)
383845200	2.31 (0.0909)

Preload adjusting spacer

Part No.	Length mm (in)
383695201	56.2 (2.213)
383695202	56.4 (2.220)
383695203	56.6 (2.228)
383695204	56.8 (2.236)
383695205	57.0 (2.244)
383695206	57.2 (2.252)

3) Adjusting drive pinion height

Adjust drive pinion height with washer installed between rear bearing cone and the back of pinion gear.

(1) Install Dummy Shaft, Collar and Gauge, as shown in the figure, and apply the specified preload on the bearings. (Refer to 2) Adjusting preload for front and rear bearings.)

At this time, install a pinion height adjusting washer which is temporarily selected or the same as that used before.

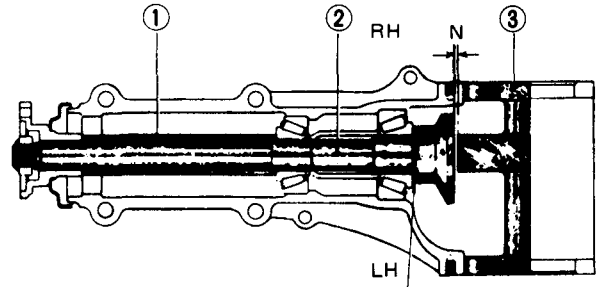

1 DUMMY COLLAR (398507703)
2 DUMMY SHAFT (398507702)
3 GAUGE (398507701)
Pinion height adjusting washer
A14-027

Fig. 51

(2) Measure the clearance N between the end of Gauge and the end surface of Dummy Shaft by using a thickness gauge.

Make sure there is no clearance between the case and Gauge.

(3) Obtain the thickness of pinion height adjusting washer to be inserted from the following formula, and replace the temporarily installed washer with this one.

$$T = To + N - (H \times 0.01) - 0.20 \text{ (mm)}$$

where

T = Thickness of pinion height adjusting washer (mm)
To = Thickness of washer temporarily inserted (mm)
N = Reading of thickness gauge (mm)
H = Figure marked on drive pinion head

(Example of calculation)

To = 2.20 + 1.20 = 3.40 mm

N = 0.23 mm H = +1,

T = 3.40 + 0.23 − 0.01 − 0.20 = 3.42

Result: Thickness = 3.42 mm

Therefore use the washer 383605200.

Pinion height adjusting washers

Part No.	Thickness mm (in)
383495200	3.09 (0.1217)
383505200	3.12 (0.1228)
383515200	3.15 (0.1240)
383525200	3.18 (0.1252)
383535200	3.21 (0.1264)
383545200	3.24 (0.1276)
383555200	3.27 (0.1287)
383565200	3.30 (0.1299)
383575200	3.33 (0.1311)
383585200	3.36 (0.1323)
383595200	3.39 (0.1335)
383605200	3.42 (0.1346)
383615200	3.45 (0.1358)
383625200	3.48 (0.1370)
383635200	3.51 (0.1382)
383645200	3.54 (0.1394)
383655200	3.57 (0.1406)
383665200	3.60 (0.1417)
383675200	3.63 (0.1429)
383685200	3.66 (0.1441)

4) Install the selected pinion height adjusting washer on drive pinion, and press the rear bearing cone into position with INSTALLER (398177700).

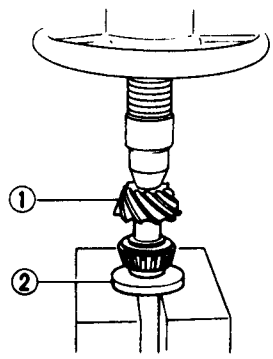

1 Drive pinion
2 INSTALLER (398177700)
A14-066

Fig. 52

5) Insert drive pinion into differential carrier, install the previously selected preload adjusting spacer and washer.

6) Press-fit front bearing cone into carrier.

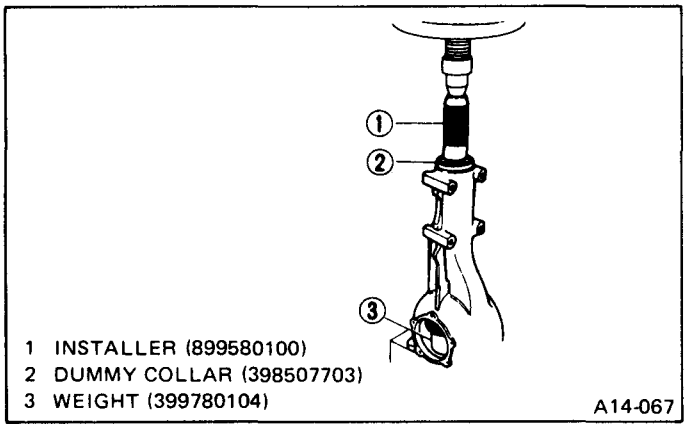

Fig. 53

7) Insert spacer, then press-fit pilot bearing with WEIGHT (399780104) and INSTALLER (899580100).

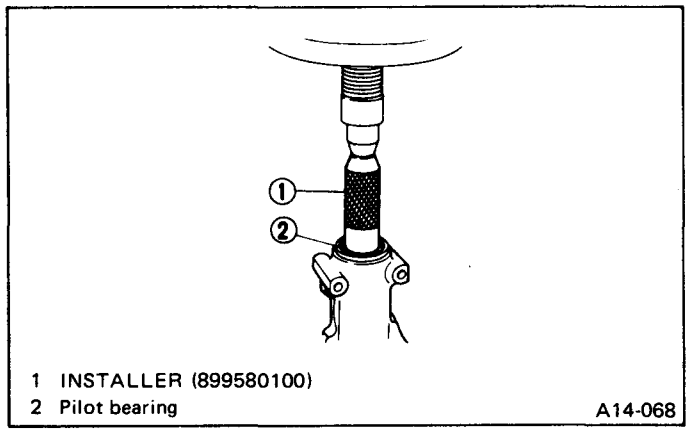

Fig. 54

8) Fit a new oil seal with DRIFT (398417700).

Apply grease between the oil seal lips. (Refer to 1) Precautions for assembling.)

9) Press-fit companion flange with INSTALLER (899874100) and WEIGHT (399780104).

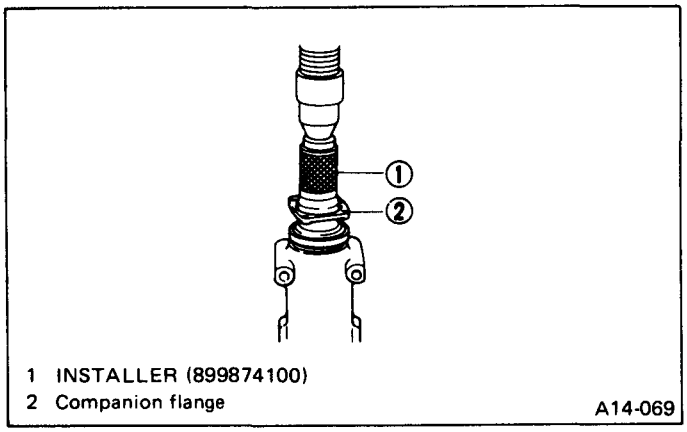

Fig. 55

10) Install self-locking nut.

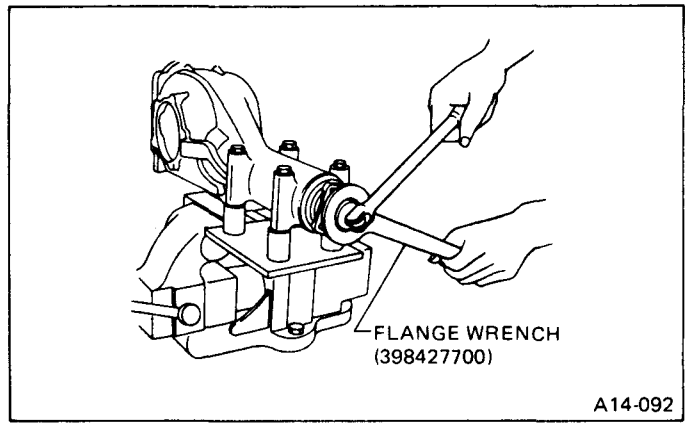

Fig. 56

Torque (Drive pinion nut):
167 – 196 N·m (17.0 – 20.0 kg-m, 123 – 145 ft-lb)

11) Assembling differential case
Install side gears and pinion mate gears, with their thrust washers and pinion mate shaft, into differential case.

Apply gear oil on both sides of the washer and on the side gear shaft before installing.
Insert the pinion mate shaft into the differential case by aligning the lock pin holes.

(1) Measure the clearance between differential case and the back of side gear.
(2) Adjust the clearance as specified by selecting side gear thrust washer.

Side gear back clearance:
0.1 – 0.2 mm (0.004 – 0.008 in)

Side gear thrust washer

Part No.	Thickness mm (in)
383445201	0.75 – 0.80 (0.0295 – 0.0315)
383445202	0.80 – 0.85 (0.0315 – 0.0335)
383445203	0.85 – 0.90 (0.0335 – 0.0354)

(3) Check the condition of rotation after applying oil to the gear tooth surfaces and thrust surfaces.
(4) After driving in pinion shaft lock pin, stake the both sides of the hole to prevent pin from falling off.
(5) Install drive gear on differential case.

Torque (Drive gear bolt):
93 – 113 N·m (9.5 – 11.5 kg-m, 69 – 83 ft-lb)

Tighten diagonally while tapping the bolt heads.

12) Before installing side bearing, measure the bearing width by using a dial gauge, WEIGHT (398227700) and GAUGE (398237700).

Standard bearing width:
20.00 mm (0.7874 in)

Set the dial gauge needle to zero, using a standard bearing or block of specified height in advance.

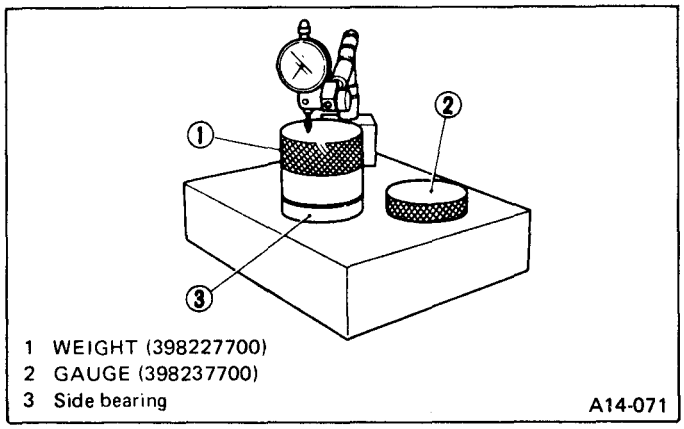

1 WEIGHT (398227700)
2 GAUGE (398237700)
3 Side bearing
A14-071

Fig. 57

13) Press side bearing cone onto differential case with DRIFT (398487700) and ADAPTER (398497701) included in PULLER SET (399527700).

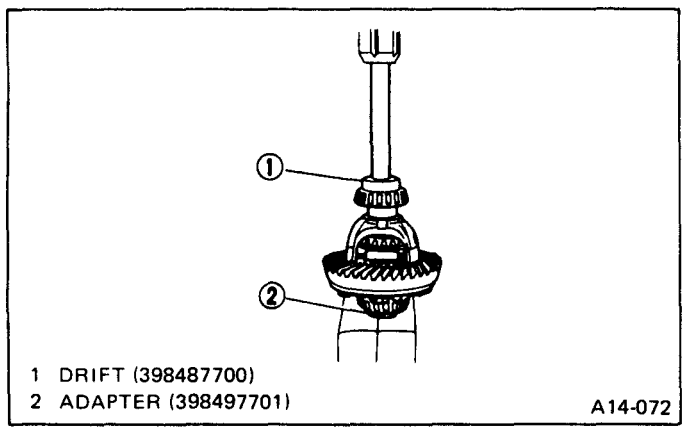

1 DRIFT (398487700)
2 ADAPTER (398497701)
A14-072

Fig. 58

14) Adjusting side bearing retainer shims
(1) The drive gear backlash and side bearing preload can be determined by the side bearing retainer shim thickness.

(2) When replacing differential case, differential carrier, side bearing, and side bearing retainer, obtain the right and left retainer shim thickness from the following formulas.

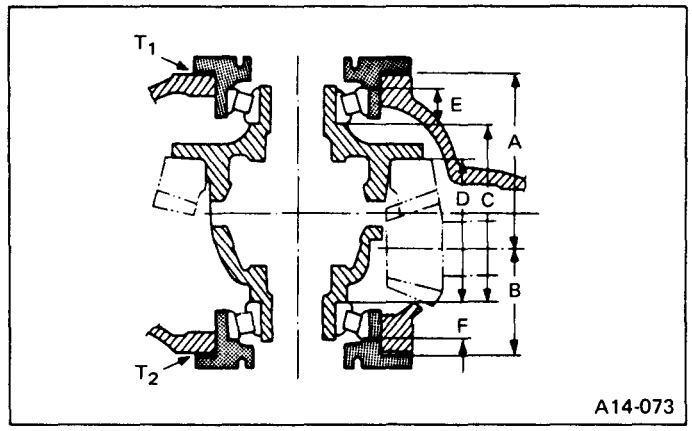

A14-073

Fig. 59

T_1 (Left) = $(A + C + G_1 - D) \times 0.01 + 0.76 - E$ (mm)
T_2 (Right) = $(B + D + G_2) \times 0.01 + 0.76 - F$ (mm)
T_1 & T_2 : Thickness of left and right side bearing retainer shim (mm)
A & B : Number marked on differential carrier.
C & D : Number marked on differential case.
E & F : Difference of width of left and right side bearing from standard width 20.0 mm, expressed in a unit of 0.01 mm.
For example, if the bearing measured width is 19.89 mm, value of E or F is as follows.
20.00 – 19.89 = 0.11 (E or F)
G_1 & G_2 : Number marked on side bearing retainer.

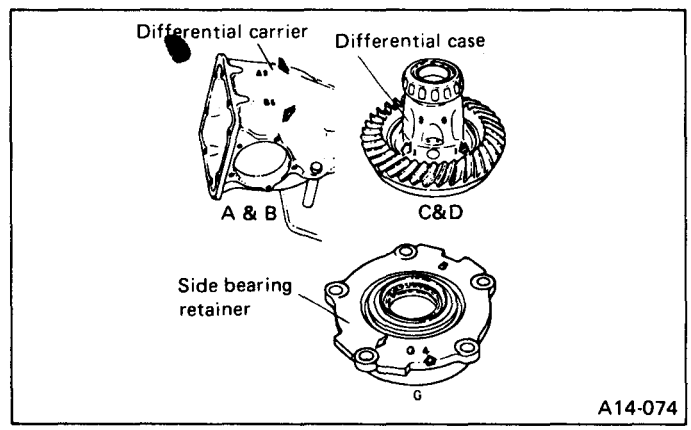

A14-074

Fig. 60

If a number is not marked, regard it as zero.

Use several shims to obtain the calculated thickness.

Side bearing retainer shims

Part No.	Thickness mm (in)
383475201	0.20 (0.0079)
383475202	0.25 (0.0098)
383475203	0.30 (0.0118)
383475204	0.40 (0.0157)
383475205	0.50 (0.0197)

Example of calculation

Ex. 1

A = 5, B = 5, C = 3, D = 3, G_1 = 4, G_2 = 1,
E = 0.10 mm, F 0.15 mm

Left side

$T_1 = (A + C + G_1 - D) \times 0.01 + 0.76 - E$
$= (5 + 3 + 4 - 3) \times 0.01 + 0.76 - 0.10$
$= 0.09 + 0.76 - 0.10$
$= 0.75$ mm

The correct shims are as follows

Thickness		Q'ty	
0.25	x	1	= 0.25
0.50	x	1	= 0.50
Total shim thickness			= 0.75 mm

Right side

$T_2 = (B + D + G_2) \times 0.01 + 0.76 - F$
$= (5 + 3 + 1) \times 0.01 + 0.76 - 0.15$
$= 0.09 + 0.76 - 0.15$
$= 0.70$ mm

The correct shims are as follows

Thickness		Q'ty	
0.20	x	1	= 0.20
0.50	x	1	= 0.50
Total shim thickness			= 0.70 mm

Ex. 2

A = 2, B = 3, C = 0, D = 3, G_1 =2, G_2 = 3,
E = 0.22 mm, F = 0.10 mm

Left side

$T_1 = (A + C + G_1 - D) \times 0.01 + 0.76 - E$
$= (2 + 0 + 2 - 3) \times 0.01 + 0.76 - 0.22$
$= 0.01 + 0.76 - 0.22$
$= 0.55$ mm

The correct shims are as follows

Thickness		Q'ty	
0.25	x	1	= 0.25
0.30	x	1	= 0.30
Total shim thickness			= 0.55 mm

Right side

$T_2 = (B + D + G_2) \times 0.01 + 0.76 - F$
$= (3 + 3 + 3) \times 0.01 + 0.76 - 0.10$
$= 0.09 + 0.76 - 0.10$
$= 0.75$ mm

The correct shims are as follows

Thickness		Q'ty	
0.25	x	1	= 0.25
0.50	x	1	= 0.50
Total shim thickness			= 0.75 mm

(3) Install the differential case ASSY into differential carrier in the reverse order of disassembling.
(4) Fit the selected shims and O-ring on side bearing retainer and install them on differential carrier with the arrow mark on the retainer directed as shown in Figure.

Be careful that side bearing cup is not damaged by bearing roller.

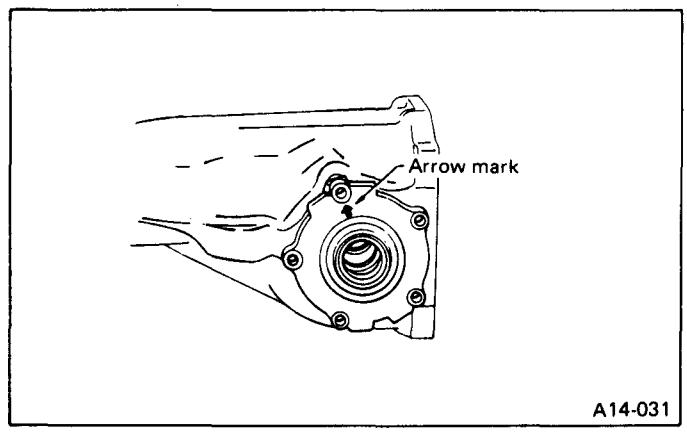

Fig. 61

(5) Tighten side bearing retainer bolts.

On vehicle with LSD, apply a coat of Three Bond 1215 (P/N 004403007) to threads.

Torque (Side bearing retainer):
9 – 12 N·m (0.9 – 1.2 kg-m, 6.5 – 8.7 ft-lb)

(6) Measure the drive gear-to-drive pinion backlash.
If the reading is not within the specified range, correct by decreasing the shim thickness on one side and increasing the shim thickness on the other side the same amount. Total shim thickness must be the same to maintain proper preload.

Backlash:
0.10 – 0.20 mm (0.0039 – 0.0079 in)

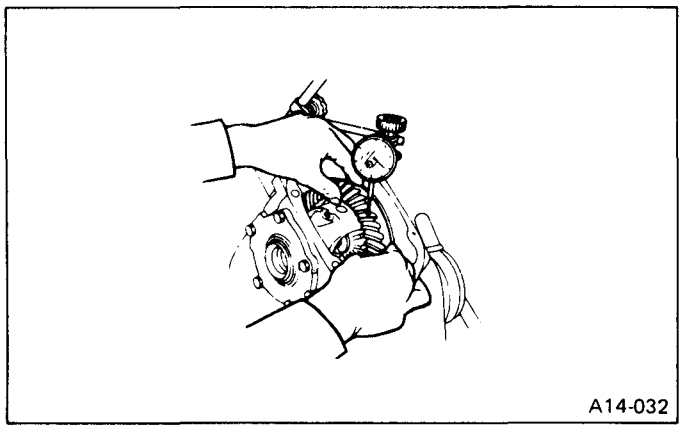
A14-032

Fig. 62

(7) At the same time, measure the turning resistance of drive pinion. Compared with the resistance when differential case is not installed, if the increase of the resistance is not within the specified range, readjust side bearing retainer shims.

Turning resistance increase:
0.1 – 0.6 N·m (1 – 6 kg-cm, 0.9 – 5.2 in-lb)

(8) Recheck drive gear-to-pinion backlash after readjusting shims.
(9) Check the drive gear runout on its back surface, and make sure pinion and drive gear rotate smoothly.

Limit of runout:
0.05 mm (0.0020 in)

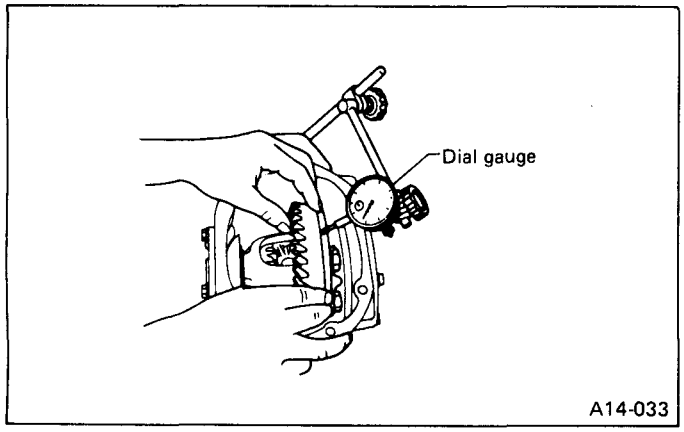

A14-033

Fig. 63

15) Checking and adjusting tooth contact of drive gear.
(1) Paint evenly both sides of three or four teeth on drive gear with red lead. Check the contact pattern after rotating drive gear several revolutions back and forth until definite contact pattern develops on drive gear.
(2) When the contact pattern is incorrect, readjust according to the instructions given in "Tooth contact pattern".
Be sure to wipe off red lead completely upon completion of adjustment.
(3) After completing the above adjustment, install oil seal in side bearing retainer.

a. Use DRIFT (398437700) to press the oil seal into position.
b. Apply chassis grease between the oil seal lips.

(4) Install rear cover.

Torque (Rear cover bolt):
19 – 25 N·m (1.9 – 2.6 kg-m, 14 – 19 ft-lb)

MOUNTING

1) Raise differential ASSY using a jack. Remount the differential assembly by temporarily tightening four self-locking nuts at the front and two self-locking nuts at the rear.
2) Install other parts in the reverse order of dismounting.
3) After installation fill differential carrier with gear oil to the upper plug level.

Oil capacity:
0.8ℓ (1.7 US pt, 1.4 Imp pt)

TOOTH CONTACT PATTERN

Condition	Contact pattern	Adjustment
Correct tooth contact Tooth contact pattern slightly shifted toward toe under no load rotation. (When loaded, contact pattern moves toward heel.)	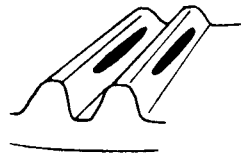	
Face contact Backlash is too large.	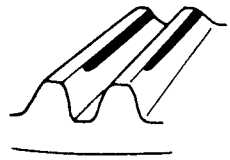 This may cause noise and chipping at tooth ends.	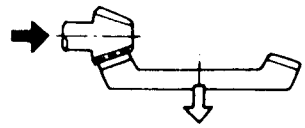 Increase thickness of drive pinion height adjusting washer in order to bring drive pinion closer to drive gear center.
Flank contact Backlash is too small.	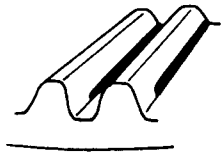 This may cause noise and stepped wear on surfaces.	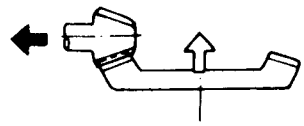 Reduce thickness of drive pinion height adjusting washer in order to move drive pinion away from drive gear.
Toe contact	 Contact area is small. This may cause chipping at toe ends.	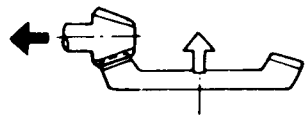 Adjust as for flank contact.
Heel contact	 Contact area is small. This may cause chipping at heel ends.	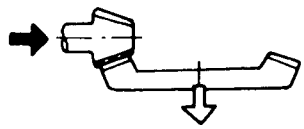 Adjust as for face contact.

Fig. 64

A13-164

TROUBLESHOOTING

Rear Differential

Symptom and possible cause	Remedy
Oil leakage	
• Worn, scratched, or incorrectly seated front or side oil seal. Scored, battered, or excessively worn sliding surface of companion flange.	Repair or replace.
• Clogged or damaged air breather.	Clean, repair or replace.
• Loose bolts on differential spindle or side retainer, or incorrectly fitted O-ring.	Tighten bolts to specified torque. Replace O-ring.
• Loose rear cover attaching bolts or damaged gasket.	Tighten bolts to specified torque. Replace gasket and apply liquid packing.
• Loose oil filler or drain plug.	Retighten and apply liquid packing.
• Wear, damage or incorrectly fitting for spindle, side retainer and oil seal.	Repair or replace.
Seizure Seized or damaged parts should be replaced, and also other parts should be thoroughly checked for any defect and should be repaired or replaced as required.	
• Insufficient backlash for hypoid gear.	Readjust or replace.
• Excessive preload for side, rear, or front bearing.	Readjust or replace.
• Insufficient or improper oil used.	Replace seized part and fill with specified oil to specified level.
Damage Damaged parts should be replaced, and also other parts should be thoroughly checked for any defect and should be repaired or replaced as required.	
• Improper backlash for hypoid gear.	Replace.
• Insufficient or excessive preload for side, rear, or front bearing.	Readjust or replace.
• Excessive backlash for differential gear.	Replace gear or thrust washer.
• Loose bolts and nuts such as drive gear bolt.	Retighten.
• Damage due to overloading.	Replace.
Noises when starting or shifting gears Noises may be caused by differential ASSY, universal joint, wheel bearing, etc. Find out what is actually making noise before disassembly.	
• Excessive backlash for hypoid gear.	Readjust.
• Excessive backlash for differential gear.	Replace gear or thrust washer.
• Insufficient preload for front or rear bearing.	Readjust.
• Loose self-locking nut.	Tighten to specified torque.
• Loose bolts and nuts such as side bearing retainer attaching bolt.	Tighten to specified torque.

Symptom and Possible cause	Remedy
Noises when cornering	
• Damaged differential gear.	Replace.
• Excessive wear or damage of thrust washer.	Replace.
• Broken pinion mate shaft.	Replace.
• Seized or damaged side bearing.	Replace.
Gear noises Since noises from engine, muffler, transmission, propeller shaft, wheel bearings, tires, and body are sometimes mistaken for noises from differential ASSY, be careful in checking them. Inspection methods to locate noises include coasting, accelerating, cruising, and jacking up all four wheels. Perform these inspections according to condition of trouble. When listening to noises, shift gears into four wheel drive and fourth speed position, trying to pick up only differential noise.	
• Improper tooth contact of hypoid gear.	Readjust or replace hypoid gear set.
• Improper backlash for hypoid gear.	Readjust.
• Scored or chipped teeth of hypoid gear.	Replace hypoid gear set.
• Seized hypoid gear.	Replace hypoid gear set.
• Improper preload for front or rear bearings.	Readjust.
• Seized, scored, or chipped front or rear bearing.	Replace.
• Seized, scored, or chipped side bearing.	Replace.
• Vibrating differential carrier.	Replace.

Propeller Shaft

Trouble and possible cause	Remedy
Vibration of propeller shaft Vibration is caused by propeller shaft during operation and is transferred to vehicle body. Generally vibration increases in proportion to vehicle speed.	
• Worn or damaged universal joint needle bearing.	Replace.
• Unbalanced propeller shaft due to bend or dent.	Replace.
• Loose installation of propeller shaft.	Retighten.
• Worn or damaged center bearing and damaged center mounting rubber.	Replace.
Tapping when starting and noise while cruising, caused by propeller shaft.	
• Worn or damaged universal joint.	Replace.
• Worn spline of sleeve yoke.	Replace.
• Loose installation of propeller shaft.	Retighten.
• Loose installation of joint.	Adjust snap ring.
• Worn or damaged center bearing and damaged center mounting rubber.	Replace.

Vibration while cruising may be caused by an unbalanced tire, improper tire inflation pressure, improper wheel alignment, etc.

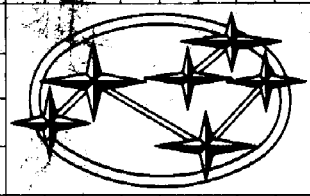

Publication No. G140BE ②
Issued: July 1987 A
Printed in Japan M-4.2

SUBARU®

XT

1988 SERVICE MANUAL

SECTION 4 and 5

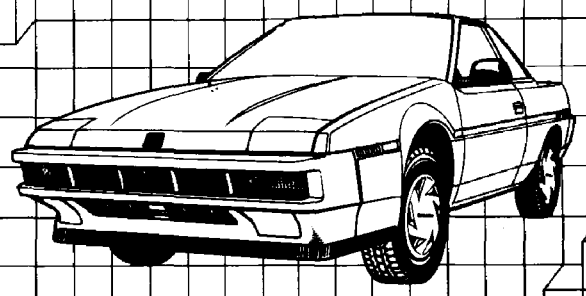

FUJI HEAVY INDUSTRIES LTD.

FOREWORD

This service manual has been prepared to provide SUBARU service personnel with the necessary information and data for the correct maintenance and repair of SUBARU XT.

The manual includes the procedures for maintenance, disassembling, reassembling, inspection and adjustment of components and trouble-shooting for guidance of both the fully qualified and the less-experiencedmechanics.

Please peruse and utilize this manual fully to ensure complete repair work for satisfying our customers by keeping their vehicles in optimum condition. When replacement of parts during repair work is needed, be sure to use SUBARU genuine parts.

All information, illustrations and specifications contained in this manual are based on the latest product information available at the time of publication approval.

We reserve the right to make changes at any time without prior notice.

FUJI HEAVY INDUSTRIES LTD.

How to use this manual

This service manual is divided into four volumes. Each volume consists of Section 1, Section 2, 3, Section 4, 5 and Section 6 respectively.

Each chapter, beginning with the Engine section, is basically made up of the following five areas.

1. Mechanism and function
2. Specifications and service data
3. Component parts
4. Service procedure
5. Trouble-shooting

"ABBREVIATION LIST" is provided at the back page of quick reference index in each volume.

"ALPHABETICAL INDEX" is also provided at the last page in each volume.

This service manual applies to SUBARU XT, and explains all equipments including factory options. Therefore, you may find some explanations for equipments not installed on the vehicle.

SUBARU and @ are registered trademarks of FUJI HEAVY INDUSTRIES LTD.
© Copyright 1987 FUJI HEAVY INDUSTRIES LTD. All rights reserved.

Not to be reproduced in whole or in part without the prior written permission
of FUJI HEAVY INDUSTRIES LTD., TOKYO JAPAN.

TABLE OF CONTENTS

1 GENERAL SECTION	1–1 Specifications 1–2 ★ ★ ★ ★ ★ ★ ★ ★ ★ ★ ★ ★ ★ 1–3 General Information 1–4 Pre-Delivery Inspection 1–5 Periodic Maintenance Services 1–6 Special Tools
2 ENGINE SECTION	2–1 Emission Control System and Vacuum Fitting 2–2 On-Car Services 2–3 Engine 2–4 Engine Lubrication System 2–5 Engine Cooling System 2–6 ★ ★ ★ ★ ★ ★ ★ ★ ★ ★ ★ ★ ★ 2–7 Fuel Injection System 2–8 Fuel System 2–9 Exhaust System 2–10 Clutch 2–11 Engine and Transmission Mounting System
3 TRANSMISSION AND DIFFERENTIAL SECTION	3–1 Manual Transmission and Differential 3–2 Automatic Transmission and Differential 3–3 Transmission Control System 3–4 4WD System
4 MECHANICAL COMPONENTS SECTION	4–1 Suspension 4–2 Wheels and Axles 4–3 Steering System 4–4 Brakes 4–5 Pedal System and Control Cables 4–6 Heater and Ventilator 4–7 Air Conditioning System
BODY SECTION	5–1 Body and Exterior 5–2 Doors and Windows 5–3 Seats, Seat Belts, and Interior 5–4 Instrument Panel
ELECTRICAL SECTION	6–1 Engine Electrical System 6–2 Body Electrical System 6-3 Wiring Diagram and Trouble-shooting

SUBARU

1988

SERVICE MANUAL

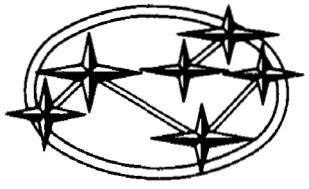

4 MECHANICAL COMPONENTS SECTION

SUSPENSION 4-1
WHEELS AND AXLES 4-2
STEERING SYSTEM 4-3
BRAKES 4-4
PEDAL SYSTEM AND CONTROL CABLES 4-5
HEATER AND VENTILATOR 4-6
AIR CONDITIONING SYSTEM 4-7

5 BODY SECTION

BODY AND EXTERIOR 5-1
DOORS AND WINDOWS 5-2
SEATS, SEAT BELTS, AND INTERIOR 5-3
INSTRUMENT PANEL 5-4

ABBREVIATION LIST

A/C	Air Conditioner
ALR	Automatic Locking Retractor
approx	approximately
ASSY	Assembly
AT	Automatic Transmission
BI-LEV	Bi-level
BJ	Bell Joint
BP	British Petroleum
B power	Battery power
Carb	Carburetor
CGR	Constant Gear Ratio
CIRC	Circulation
CP	Complete
CTR F LH	Center Front Left-hand
CTR R	Center Rear
CVJ	Constant Velocity Joint
DEF	Defroster
dia	Diameter
DOJ	Double Offset Joint
E/A	Energy Absorbing
E/G	Engine
EGI	Electronic Controlled Gasoline Injection
ELR	Emergency Locking Retractor
ERB	Emergency Release Buckle
Ex	Example
F/C	Fresh/Circulation
FFV	Fast Fill Valve
FICD	Fast Idle Control Device
FL	Front left
F LH	Front Left-hand
FMVSS	Federal Motor Vehicle Safety Standard
FR	Front right
F RH	Front Right-hand
F sus	Front suspension
GND	Ground
hex	hexagon
ID	Inside Diameter
IG	Ignition
IMACA	International Mobile Air Conditioning Association Inc.
ISC	Idle Speed Control
K/D	Kickdown
LH	Left-hand
LWR	Lower
MPFI	Multi Point Fuel Injection
MT	Manual Transmission
PCD	Pitch Circle Diameter
Pd	Discharge pressure
PHV	Pressure Hold Valve
P/N	Parts Number
Ps	Suction pressure
R-12	Refrigerant-12
R DPV	Rear Dual Proportioning Valve
RH	Right-hand
RL	Rear left
R LH	Rear Left-hand
RQ	Rear Quarter
RR	Rear right
SD	Side
S/R	Single Range
SV plate	Suction Valve plate
TDC	Top Dead Center
UPR	Upper
VGR	Variable Gear Ratio
4WD D/R	4-Wheel Drive Dual Range
4WD S/R	4-Wheel Drive Single Range

INDEX

Air Bleeding 4-4-45
Air (Pneumatic) Suspension 4-1- 4
Air Tank Assembly 4-1-43
Auto-Door Lock Actuator 5-2-14
Auto-Door Lock Switch 5-2-14
Automatic Shoulder Belt 5-3-24
Blower Assembly 4-6-10
Brake Booster 4-4- 5
Brake Booster 4-4-17
Brake Booster 4-4-37
Brake Fluid Level Indicator 4-4-45
Brake Hose 4-4-40
Checker 5-2- 8
Compressor 4-7-23
Compressor Clutch 4-7-23
Compressor & Drier Assembly 4-1-42
Condenser 4-7-35
Console Box 5-3-18
Control Valve (Power Steering Gearbox) 4-3-52
Cover and Molding 5-1-37
Disc Brake 4-4- 2
Door and Hinge 5-2- 7
Door Glass 5-2-12
Door Latch 5-2- 9
Door Sash 5-2-13
Door Striker 5-2-14
Door Weatherstrip 5-2-10
Electronic-controlled Motor Drive Power Steering 4-3- 5
Entire Brake System 4-4-48
Evaporator 4-7-37
Exhaust Cover 5-1-36
Flexible Hose 4-7-38
Fluid Line (Power Steering System) 4-3-70
Front Air Suspension Assembly 4-1-39
Front Axle 4-2- 2
Front Axle 4-2- 9
Front Axle 4-2-13
Front Ball Joint 4-1-33
Front Bumper 5-1-25
Front Crossmember 4-1-32
Front Disc Brake 4-4-12
Front Disc Brake 4-4-20
Front Fender 5-1-35
Front Seat 5-3- 2
Front Seat 5-3-12
Front Stabilizer 4-1-31
Front Strut Assembly 4-1-27
Front Suspension 4-1- 2
Front Suspension Assembly 4-1-25
Glass Stopper 5-2-13
Ground Clearance Measuring (4WD Models Only) 4-1-24
Gusset 5-2-13
Heater Control (Control Wing, Temperature Control Lever and Fan Switch Lever) 4-6-11
Heater Unit 4-6-10
Hill-Holder 4-4- 7
Hill-Holder 4-4-18
Hill-Holder 4-4-42
Hill-Holder 4-4-50
Hood Lock 5-1-23
Hood Lock Release Cable 5-1-24
Inner Remote Assembly 5-2- 9
Inner Trim 5-3- 8
Inner Trim 5-3-19
Instrument Panel 5-4- 4
Key Lock 5-2- 9
(Manual Steering System) 4-3-31
Master Cylinder 4-4- 2
Master Cylinder 4-4-36
Master Cylinder (Except XT6) 4-4-15
Master Cylinder for XT6 4-4-16
Microswitch 4-7-40
Motor Pump & Power Controller 4-3-75
Mud Guard 5-1-36
Mud Guard R 5-1-36
Oil Pump (Power Steering System) 4-3-60
Outer Handle 5-2-10
Outer Weatherstrip 5-2-10
Pad Wear Indicator 4-4- 2
Parking (Hand) Brake 4-4-19
Parking (Hand) Brake 4-4-44
Pedal 4-5- 6
Pocket 5-4- 5
Power Steering System (Except for XT6) 4-3-15
Power Steering System for XT6 4-3-17
Pressure Switch 4-7-40
Proportioning Valve 4-4- 5
Proportioning Valve 4-4-41
Pulser Amplifier 4-7-41
Rear Air Suspension Assembly 4-1-41
Rear Axle 4-2- 4
Rear Axle 4-2-11
Rear Axle (FWD) 4-2-24
Rear Axle (4WD) 4-2-26
Rear Bumper 5-1-27
Rear Coil Spring 4-1-36
Rear Disc Brake 4-4-13
Rear Disc Brake 4-4-30
Rear Drum Brake 4-4-33
Rear Drum Brake (FWD) 4-4-14
Rear Quarter Glass 5-2-23
Rear Seat 5-3- 4
Rear Seat 5-3-12
Rear Suspension 4-1- 3
Rear Suspension Assembly 4-1-34
Rearview Mirror 5-1-36
Rear Window Glass 5-2-23
Receiver Drier 4-7-36
Relay and Fuse 4-7-39
Replacement of Brake Fluid 4-4-46

Roof Weatherstrip 5-2-11
Sealing Cover 5-2- 8
Seat Belts 5-3- 5
Seat Belts 5-3-14
Stabilizer 5-2-11
Steering Column 4-3- 3
Steering Column 4-3-13
Steering Column 4-3-18
Steering Gearbox
(Manual Steering System) 4-3-31
Steering Gearbox
(Power Steering System) 4-3-41
Torsion Bar 5-1-24
Trim Cushion and Trim Back
(1800 cc DL model) 5-3-13
Trim Panel 5-2- 7
Trunk Lid 5-1-24
Trunk Lid Lock Assembly and Key Cylinder 5-1-25
VGR (Variable Gear Ratio) Gear Box 4-3- 2
Wheel and Tire 4-2-29
Window Regulator 5-2-12
Windshield 5-2-20

FOREWORD

This service manual has been prepared to provide SUBARU service personnel with the necessary information and data for the correct maintenance and repair of SUBARU XT.

The manual includes the procedures for maintenance, disassembling, reassembling, inspection and adjustment of components and trouble-shooting for guidance of both the fully qualified and the less-experiencedmechanics.

Please peruse and utilize this manual fully to ensure complete repair work for satisfying our customers by keeping their vehicles in optimum condition. When replacement of parts during repair work is needed, be sure to use SUBARU genuine parts.

All information, illustrations and specifications contained in this manual are based on the latest product information available at the time of publication approval.

We reserve the right to make changes at any time without prior notice.

FUJI HEAVY INDUSTRIES LTD.

How to use this manual

This service manual is divided into four volumes. Each volume consists of Section 1, Section 2, 3, Section 4, 5 and Section 6 respectively.

Each chapter, beginning with the Engine section, is basically made up of the following five areas.

1. Mechanism and function
2. Specifications and service data
3. Component parts
4. Service procedure
5. Trouble-shooting

"ABBREVIATION LIST" is provided at the back page of quick reference index in each volume.

"ALPHABETICAL INDEX" is also provided at the last page in each volume.

This service manual applies to SUBARU XT, and explains all equipments including factory options. Therefore, you may find some explanations for equipments not installed on the vehicle.

SUBARU and @ are registered trademarks of FUJI HEAVY INDUSTRIES LTD.
© Copyright 1987 FUJI HEAVY INDUSTRIES LTD. All rights reserved.

Not to be reproduced in whole or in part without the prior written permission
of FUJI HEAVY INDUSTRIES LTD., TOKYO JAPAN.

TABLE OF CONTENTS

1 GENERAL SECTION	1–1 Specifications 1–2 ★ ★ ★ ★ ★ ★ ★ ★ ★ ★ ★ ★ ★ 1–3 General Information 1–4 Pre-Delivery Inspection 1–5 Periodic Maintenance Services 1–6 Special Tools
2 ENGINE SECTION	2–1 Emission Control System and Vacuum Fitting 2–2 On-Car Services 2–3 Engine 2–4 Engine Lubrication System 2–5 Engine Cooling System 2–6 ★ ★ ★ ★ ★ ★ ★ ★ ★ ★ ★ ★ ★ 2–7 Fuel Injection System 2–8 Fuel System 2–9 Exhaust System 2–10 Clutch 2–11 Engine and Transmission Mounting System
3 TRANSMISSION AND DIFFERENTIAL SECTION	3–1 Manual Transmission and Differential 3–2 Automatic Transmission and Differential 3–3 Transmission Control System 3–4 4WD System
4 MECHANICAL COMPONENTS SECTION	4–1 Suspension 4–2 Wheels and Axles 4–3 Steering System 4–4 Brakes 4–5 Pedal System and Control Cables 4–6 Heater and Ventilator 4–7 Air Conditioning System
BODY SECTION	5–1 Body and Exterior 5–2 Doors and Windows 5–3 Seats, Seat Belts, and Interior 5–4 Instrument Panel
ELECTRICAL SECTION	6–1 Engine Electrical System 6–2 Body Electrical System 6-3 Wiring Diagram and Trouble-shooting

SUBARU

1988

SERVICE MANUAL

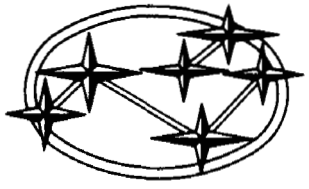

4 MECHANICAL COMPONENTS SECTION

SUSPENSION 4-1
WHEELS AND AXLES 4-2
STEERING SYSTEM 4-3
BRAKES 4-4
PEDAL SYSTEM AND CONTROL CABLES 4-5
HEATER AND VENTILATOR 4-6
AIR CONDITIONING SYSTEM 4-7

5 BODY SECTION

BODY AND EXTERIOR 5-1
DOORS AND WINDOWS 5-2
SEATS, SEAT BELTS, AND INTERIOR 5-3
INSTRUMENT PANEL 5-4

ABBREVIATION LIST

A/C	Air Conditioner
ALR	Automatic Locking Retractor
approx	approximately
ASSY	Assembly
AT	Automatic Transmission
BI-LEV	Bi-level
BJ	Bell Joint
BP	British Petroleum
B power	Battery power
Carb	Carburetor
CGR	Constant Gear Ratio
CIRC	Circulation
CP	Complete
CTR F LH	Center Front Left-hand
CTR R	Center Rear
CVJ	Constant Velocity Joint
DEF	Defroster
dia	Diameter
DOJ	Double Offset Joint
E/A	Energy Absorbing
E/G	Engine
EGI	Electronic Controlled Gasoline Injection
ELR	Emergency Locking Retractor
ERB	Emergency Release Buckle
Ex	Example
F/C	Fresh/Circulation
FFV	Fast Fill Valve
FICD	Fast Idle Control Device
FL	Front left
F LH	Front Left-hand
FMVSS	Federal Motor Vehicle Safety Standard
FR	Front right
F RH	Front Right-hand
F sus	Front suspension
GND	Ground
hex	hexagon
ID	Inside Diameter
IG	Ignition
IMACA	International Mobile Air Conditioning Association Inc.
ISC	Idle Speed Control
K/D	Kickdown
LH	Left-hand
LWR	Lower
MPFI	Multi Point Fuel Injection
MT	Manual Transmission
PCD	Pitch Circle Diameter
Pd	Discharge pressure
PHV	Pressure Hold Valve
P/N	Parts Number
Ps	Suction pressure
R-12	Refrigerant-12
R DPV	Rear Dual Proportioning Valve
RH	Right-hand
RL	Rear left
R LH	Rear Left-hand
RQ	Rear Quarter
RR	Rear right
SD	Side
S/R	Single Range
SV plate	Suction Valve plate
TDC	Top Dead Center
UPR	Upper
VGR	Variable Gear Ratio
4WD D/R	4-Wheel Drive Dual Range
4WD S/R	4-Wheel Drive Single Range

SUBARU

1988

Page

*1MECHANISM AND FUNCTION 2
SPECIFICATIONS AND SERVICE DATA 13
COMPONENT PARTS 16
SERVICE PROCEDURE FOR CONVENTIONAL SUSPENSION 20
Inspection and Adjustment 20
Ground Clearance Measuring (4WD Models Only) 24
Front Suspension Assembly 25
Front Strut Assembly 27
Front Stabilizer 31
Front Crossmember 32
Front Ball Joint 33
Rear Suspension Assembly 34
Rear Coil Spring 36
Troubleshooting 38
*1*2SERVICE PROCEDURE FOR AIR (PNEUMATIC) SUSPENSION ... 39
General Precautions 39
Front Air Suspension Assembly 39
Rear Air Suspension Assembly 41
Compressor & Drier Assembly 42
Air Tank Assembly 43
*1TROUBLESHOOTING 44

*1 Canada models are equipped with a height control function. Also refer to the 87MY manual.

*2 In this topic are described the different points of the air (pneumatic) suspension from the explanations described in the above topic. Accordingly, use this topic together with the above topic.

MECHANISM AND FUNCTION

Front Suspension

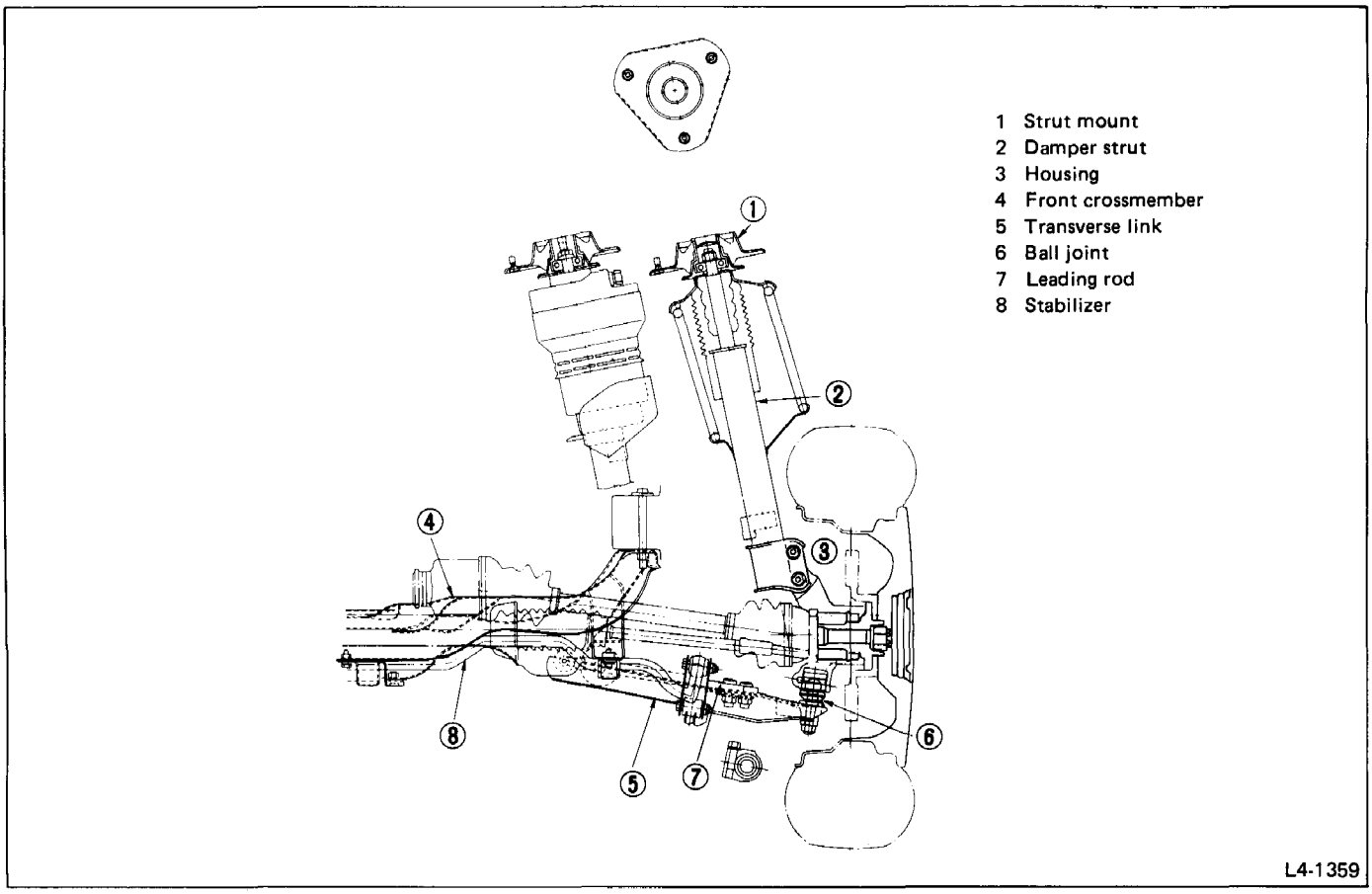

Fig. 1

The front suspension is a strut-type independent suspension, with cylindrical double-action oil damper and coil spring [or air spring for air (pneumatic) suspension].

The top of oil damper is mounted to the body through the cushion rubber, which has resulted in elimination of any vibration and improved passenger comfort cooperating with other rubbers.

This type also maintains a wide distance between the upper and lower supporting points and makes adjustment of the camber or caster unnecessary.

The transverse link has a maintenance free ball joint installed by nut at the outer end, and inner end is fitted to the front crossmember through the cushion rubber.

The leading rod is bolted at the outer end to the transverse link and the inner end of leading rod is connected to the leading rod bracket through the cushion rubber. Both front crossmember and leading rod bracket are bolted to the vehicle body.

The stabilizer is attached to the front crossmember through the cushion rubbers and its ends are connected to the transverse links through the rubber bushings.

Rear Suspension

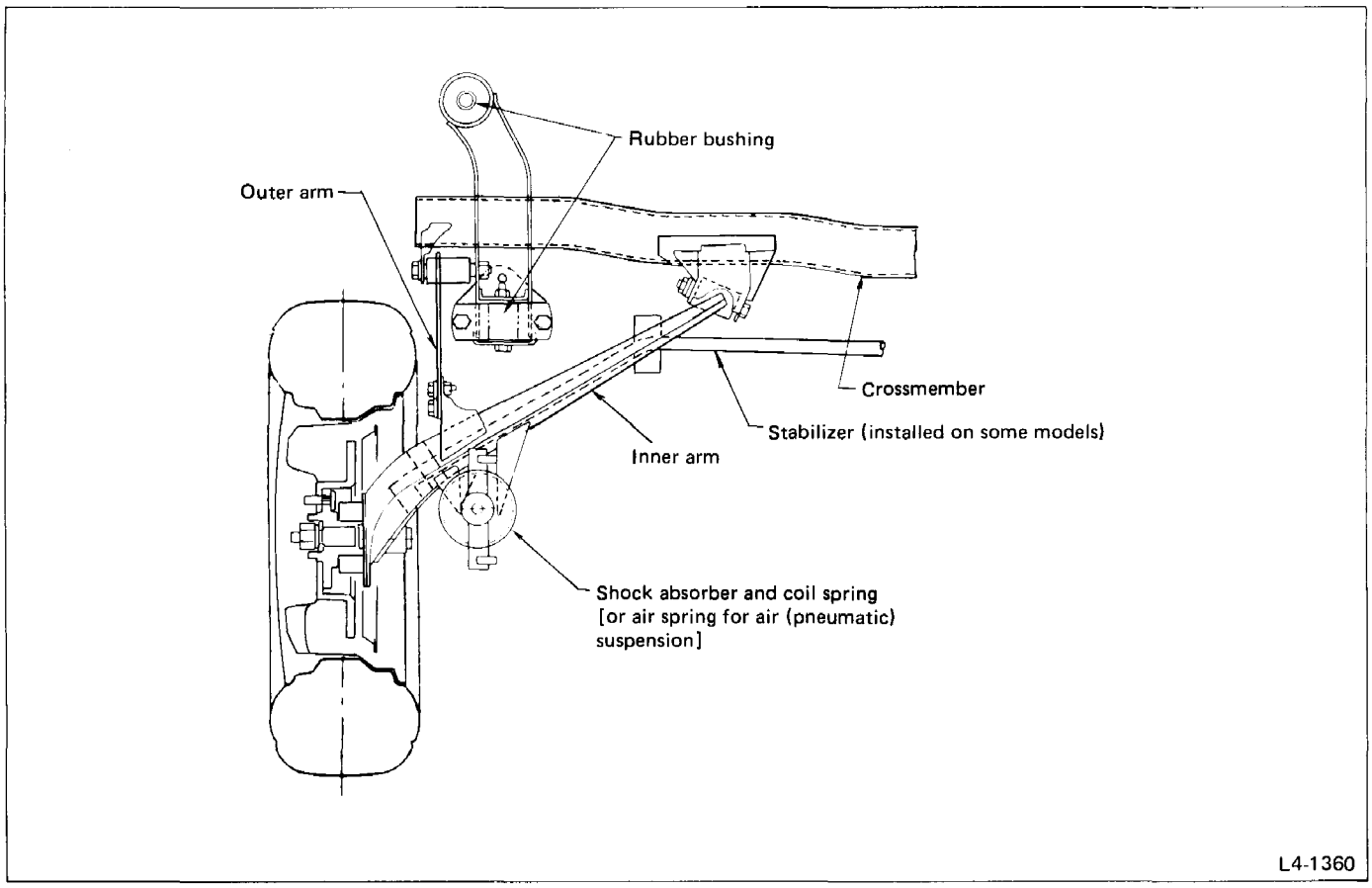

Fig. 2

The rear suspension is of semi-trailing arm type independent suspension, with cylindrical double-action oil damper and coil spring [or air spring for air (pneumatic) suspension].
Crossmember is installed to body frame with brackets at both ends via bushings.

One end of inner arm is bolted to crossmember through bushing, and another end bolted with outer arm is mounted to body through shock absorber ASSY.
The certain models have a stabilizer installed to inner arm via bushings.

Air (Pneumatic) Suspension

This system maintains constant ground clearance regardless of vehicle load. For this purpose air volume in each air spring is adjusted according to a signal from a vehicle height sensor which is installed in each air spring.

Features

The air spring (ground clearance maintaining) adopted on the 4WD vehicle provides good riding comfort and stabilized driving even on rough roads.

1) The air spring is adopted in place of the conventional metal spring to improve riding comfort.
2) A constant wheel stroke is available irrespective of the load, and this results in reduced bumping shock on irregular surfaces of the road.
3) The variable damping force mechanism built into the air spring keeps the damping force low to assure good riding comfort while the wheel stroke is small. When the wheel stroke increases, the damping force is made larger to improve driveability on rough surfaces. This increase in damping force also improves stability during high speeds.
4) The vehicle posture can always be maintained constant, so that the light axis of the headlight will be maintained constant.

Operation

Ground clearance "constant"

When the ground clearance becomes smaller than the preset level due to an increase in load, the vehicle height sensor built into each rolling diaphragm type air spring issues a "low" signal. If this condition lasts for a certain period of time, the control unit judges that the ground clearance is low, and opens the solenoid valve to send compressed air to the air spring from the air tank (←—— arrow mark). As the ground clearance increases, the "low" signal from the sensor disappears, and the control unit closes the solenoid valve. The ground clearance is thus always held at a constant level.

If the pressure in the air tank drops, the tank pressure switch operates the compressor until the pressure returns to the specified level.

If the ground clearance becomes larger than the preset level due to a load reduction, the sensor issues a "high" signal, and opens the solenoid valve of the respective air spring to allow air to be released from the air spring (←---arrow mark). As the ground clearance lowers, the "high" signal from the sensor disappears, and the control unit closes the solenoid valve.

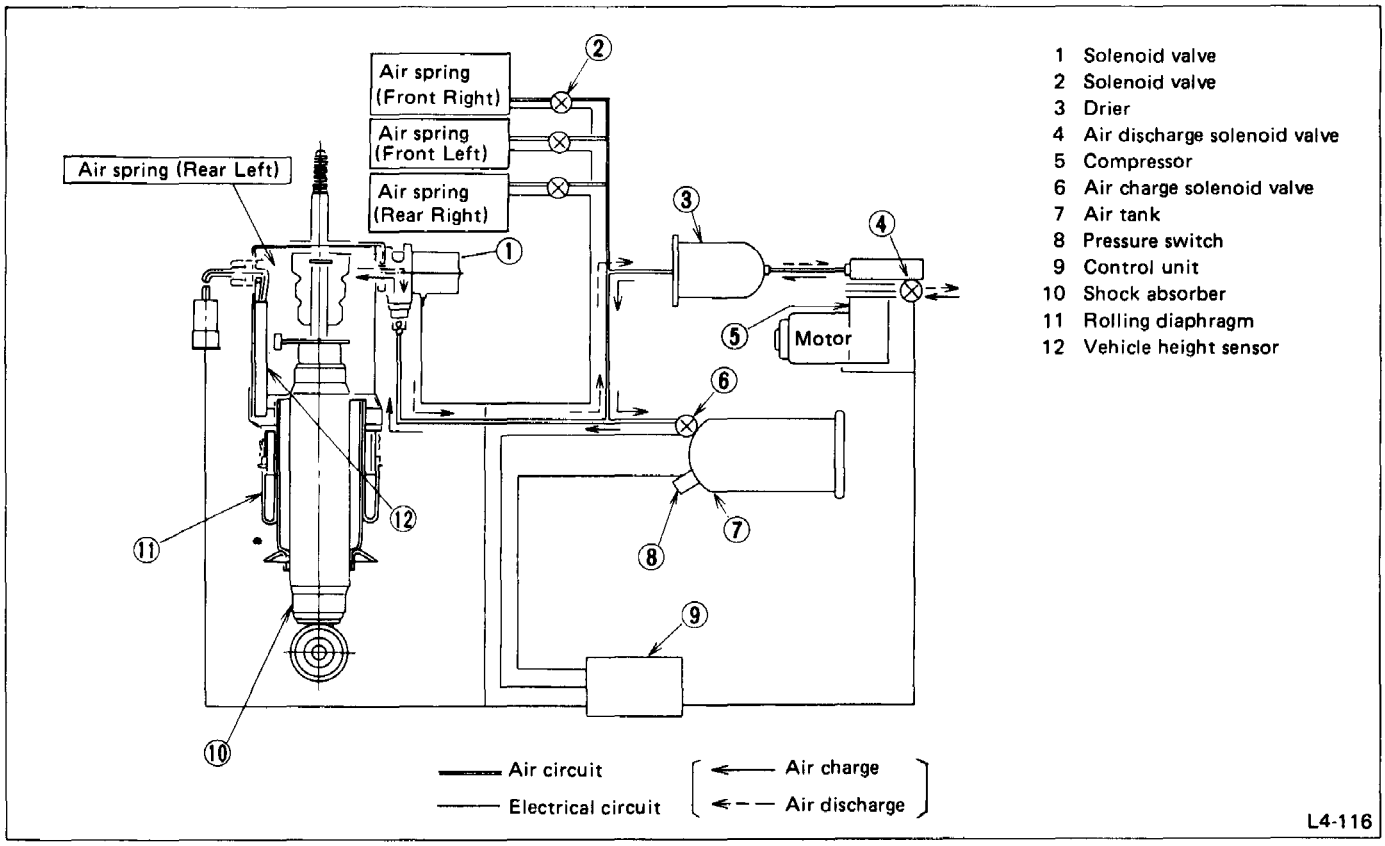

1 Solenoid valve
2 Solenoid valve
3 Drier
4 Air discharge solenoid valve
5 Compressor
6 Air charge solenoid valve
7 Air tank
8 Pressure switch
9 Control unit
10 Shock absorber
11 Rolling diaphragm
12 Vehicle height sensor

Fig. 3

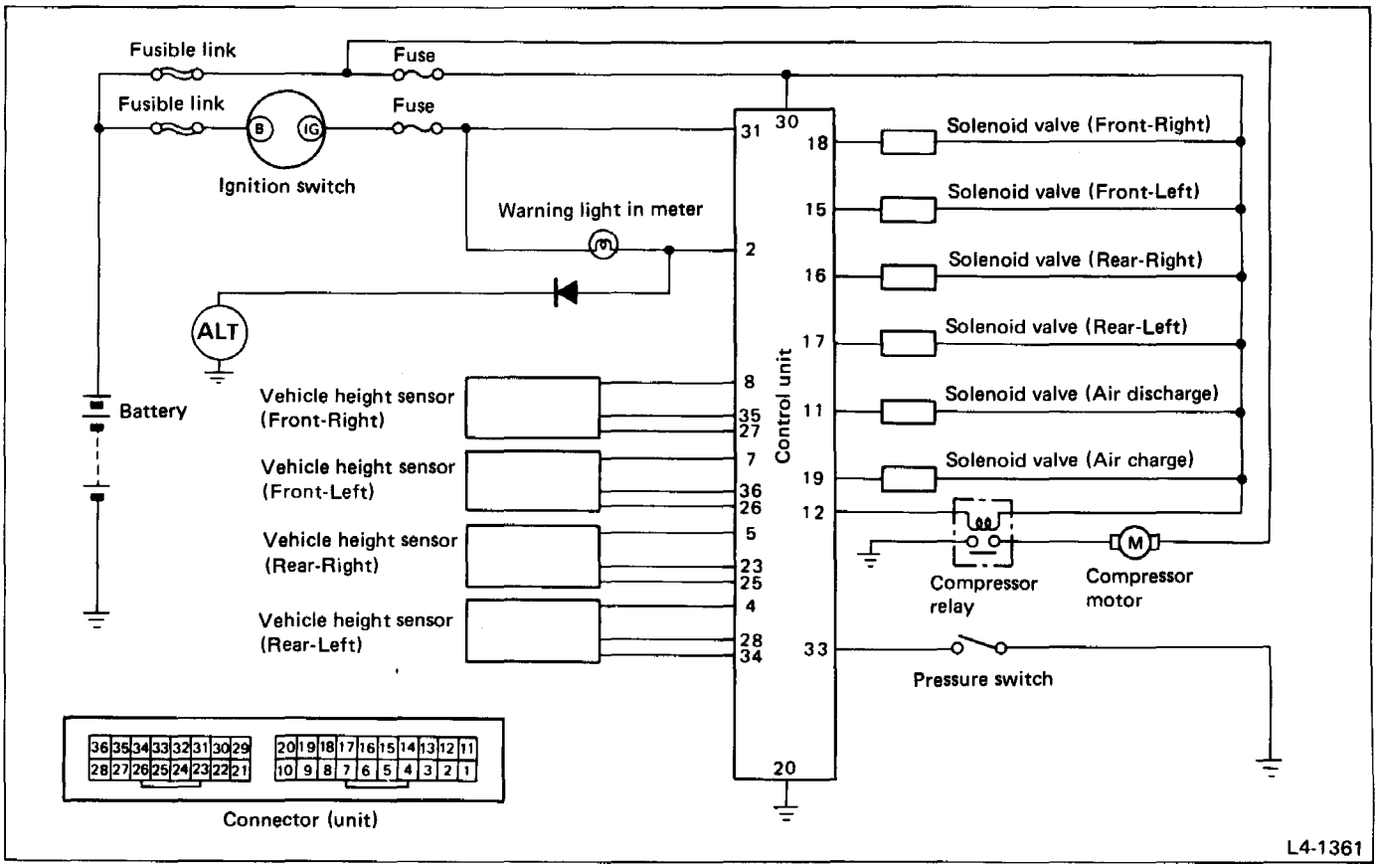

Fig. 4 Electrical circuit

Construction

The air suspension system consists of the following.

- A warning light which illuminates in case of trouble.
- Four vehicle height sensors (each built into its respective air spring) which detect proper vehicle height for each wheel.
- Six solenoid valves.
- A control unit which opens and closes the solenoid valves in proper order and procedure by judging the signals from the vehicle height sensors.
- An air tank and an electric compressor which is operated by the pressure switch.
- A drier and air piping.

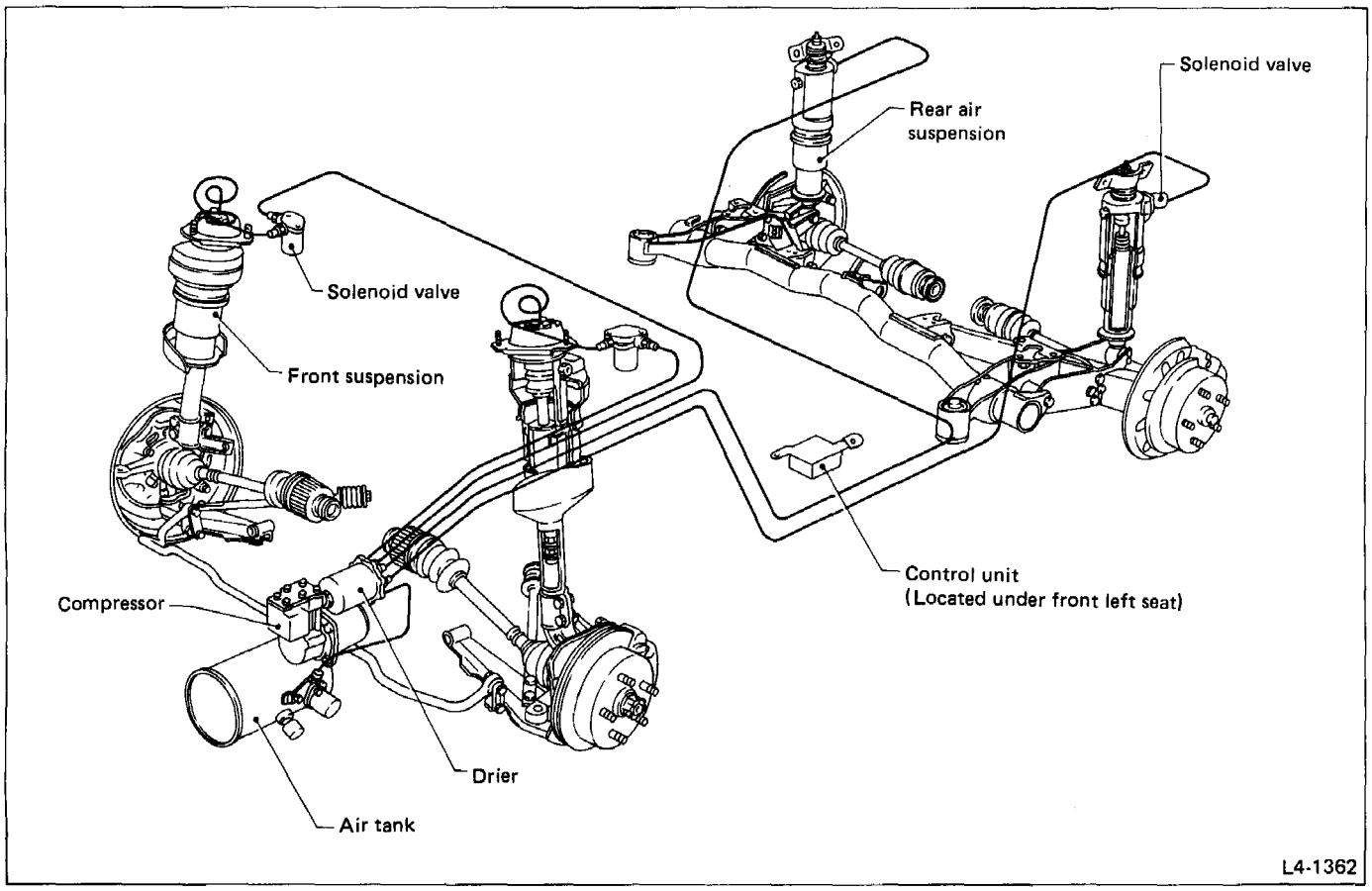

Fig. 5 Air suspension layout

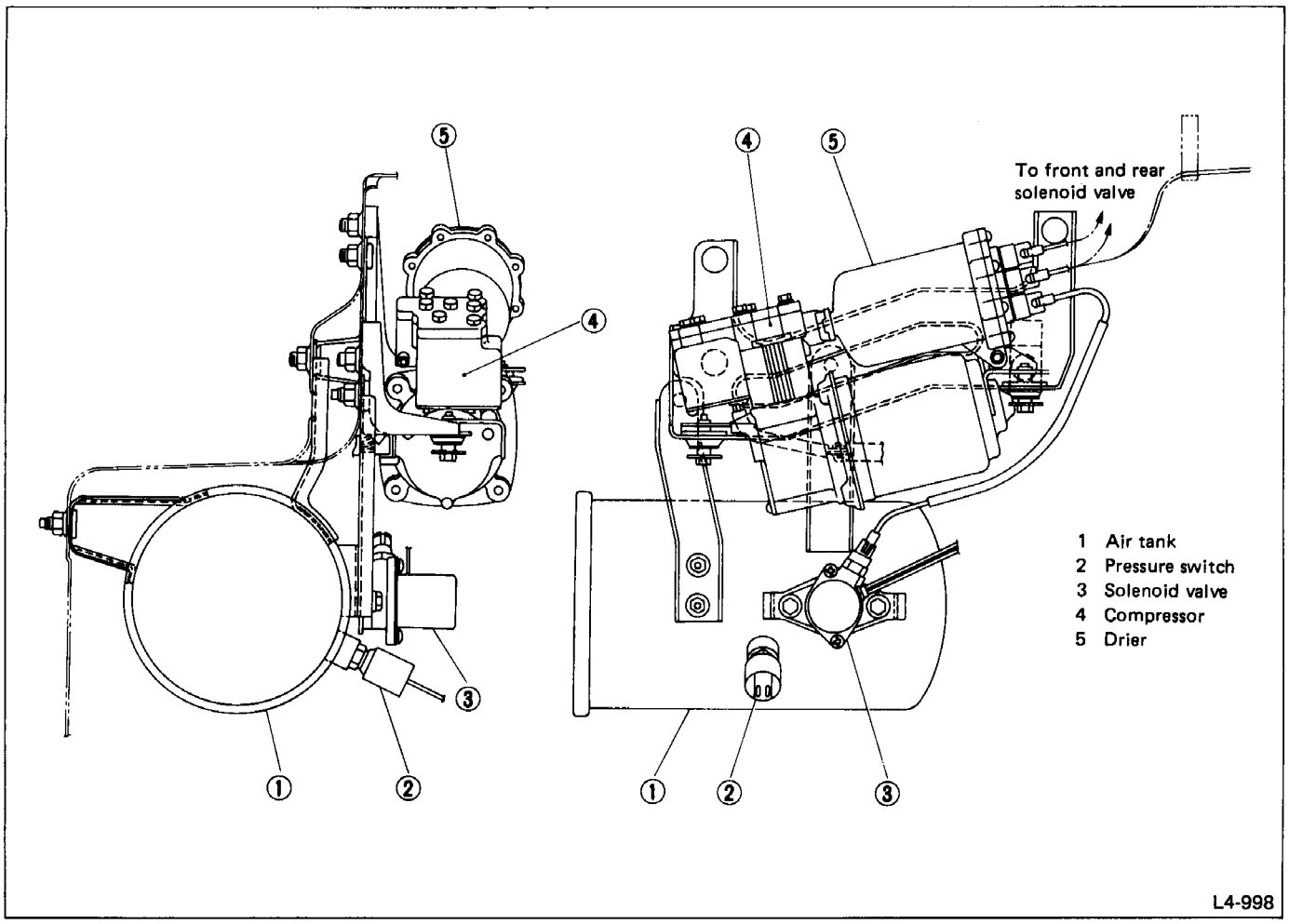

Fig. 6 Air tank, compressor and drier

WARNING Light

The control unit registers a system malfunction when either of the following conditions occurs. The warning light will blink and subsequent control operations will stop.

a) When both HIGH and LOW signals are simultaneously transmitted by one height-control sensor.
b) When control unit continuously sends a signal to the same solenoid valve and compressor relay for 10 minutes due to air leakage or other problem.

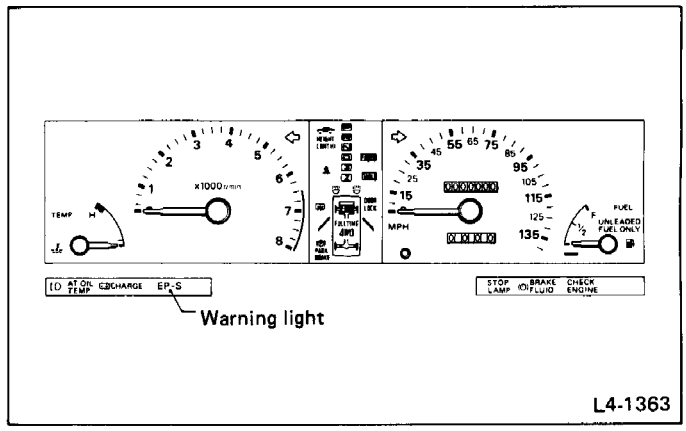

Fig. 7 Indicator

Vehicle height sensor

Vehicle height sensor consists of reed switch and magnet. The reed switch is fixed on a body side part of air suspension ASSY and magnet is fixed on a wheel side part of it. Height signal is generated according to the relation between the positions of reed switch and magnet.

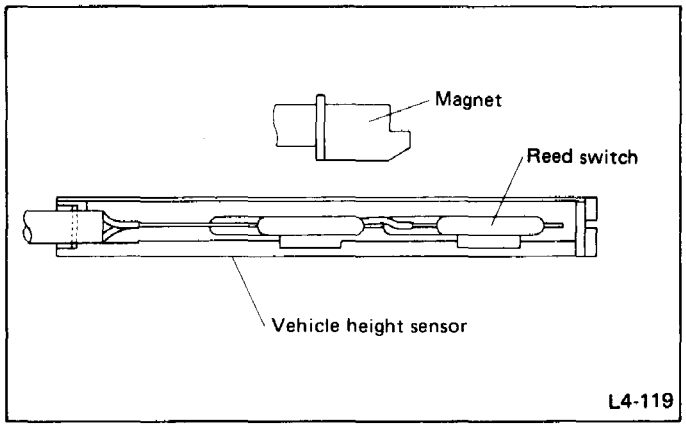

Fig. 8

Control unit

The control unit receives signals from the vehicle height sensors and others, and controls the solenoid valve of each air suspension as well as the compressor. The microcomputer adopted in this control unit permits each wheel to be controlled independently so as to obtain the optimum performance according to the loaded condition of the vehicle.

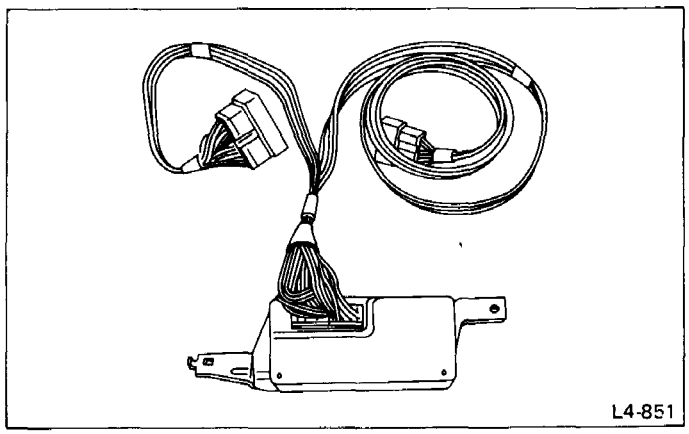

Fig. 9

Solenoid valve (control valve)

This valve is operated according to a signal from control unit when air is charged or discharged for air suspension.

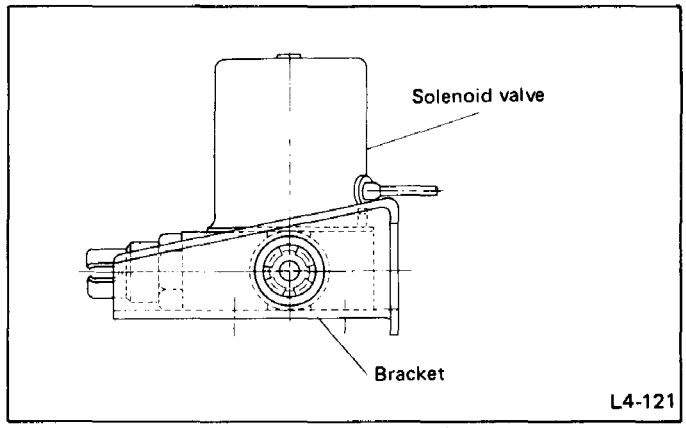

Fig. 10

The shape of bracket differs according to the installing position.

Drier

Drier dries air which flows through the drier to air tank or each air spring with silica gel in order to prevent freeze of water in air pipe. Silica gel is refreshed by dry air when discharging.

A residual pressure valve is provided so that the diaphragm can always be held in the expanded state, hence a residual pressure of 98 kPa (1 kg/cm^2, 14 psi) remains in the air chamber even after air discharge operation is completed.

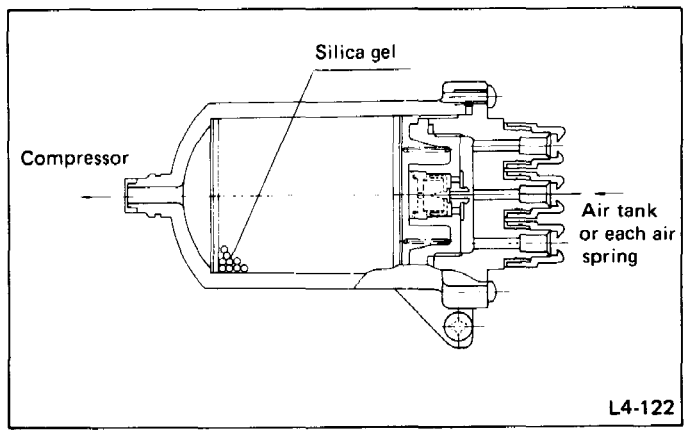

Fig. 11

Air tank

Pressure switch and solenoid valve for air charge are incorporated in air tank. The air tank is filled with compressed air of 755 to 941 kPa (7.7 to 9.6 kg/cm^2, 109 to 137 psi).

Pressure switch

If the pressure in the air tank rises, the pressure sensitive disc pushes the guide pin up to open the moving contact, and the switch is opened. When the pressure drops, the switch is closed.

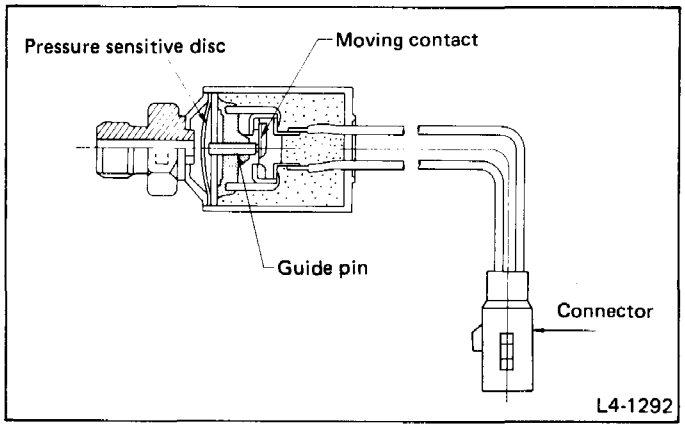

Fig. 12

Front and rear air suspension assemblies

Both air suspension ASSYs adopt air springs in place of the conventional metal springs. A housing is provided on the outside of the shock absorber, which can be stroked through the function of the rolling diaphragm.

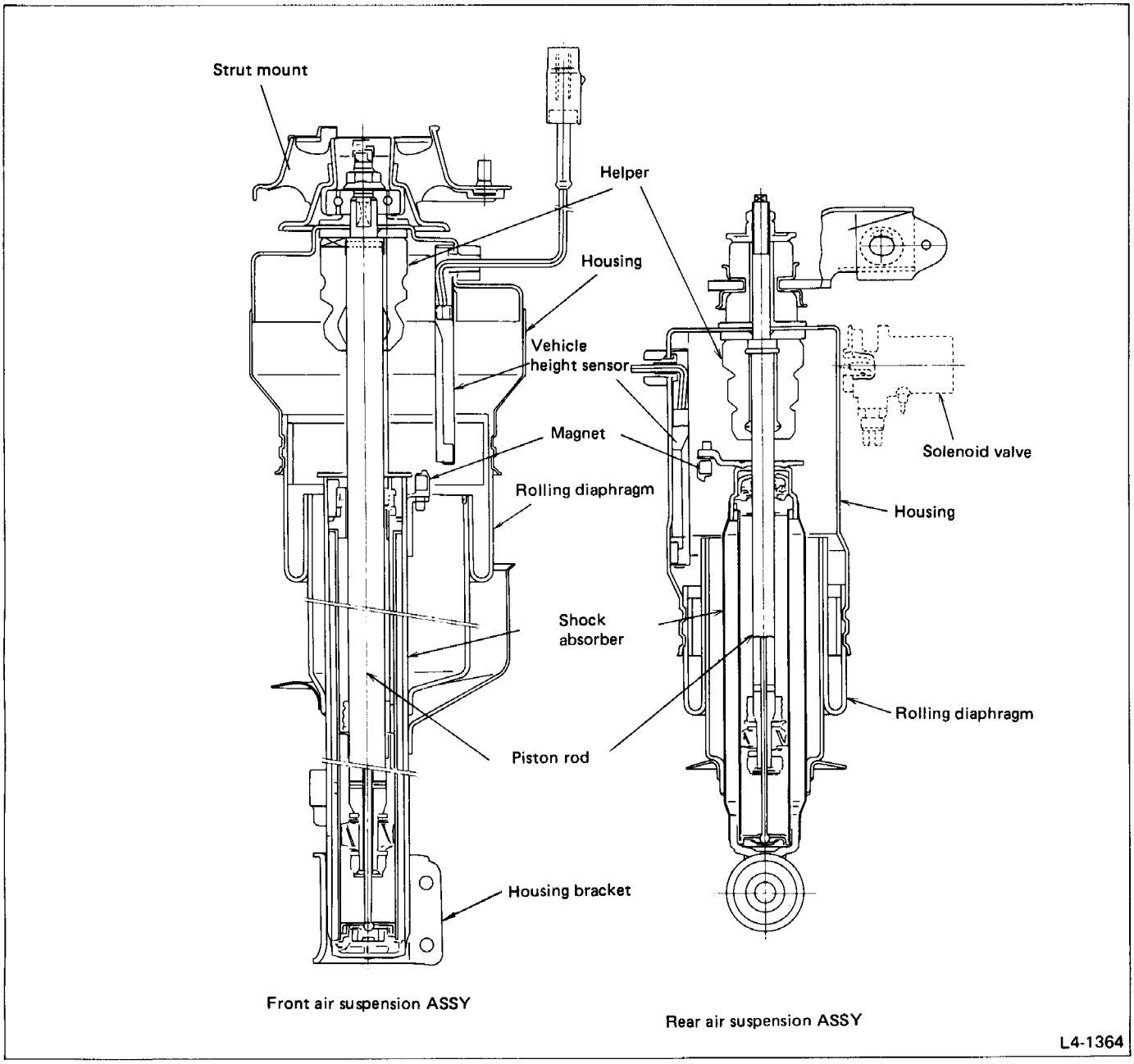

Fig. 13

Air Pipe

The air pipe is made of nylon, and the joint at the front strut is composed of a cap, air bushing, and O-ring. The air pipe is secured by tightening the cap to the specified torque to crush the end of the air bushing.

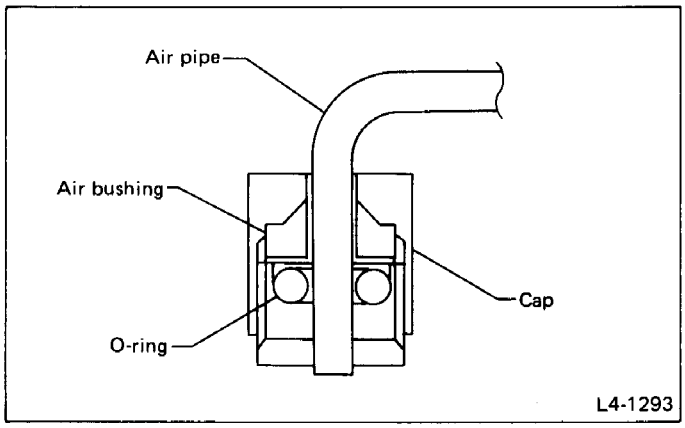

Fig. 14

All other joints adopt a quick joint whose construction is shown below.

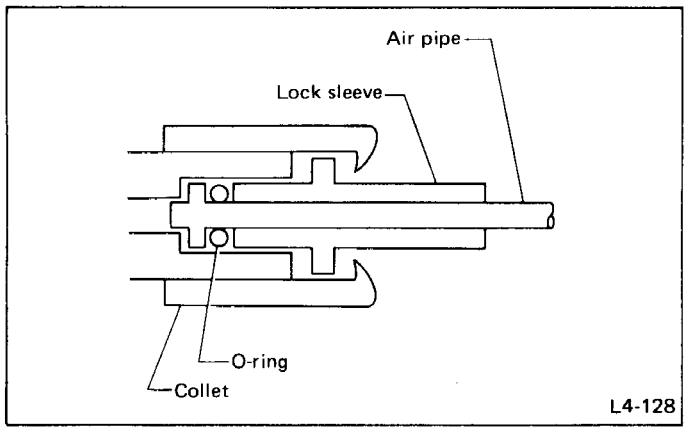

Fig. 15

VARIABLE DAMPING FORCE MECHANISM

This mechanism senses the wheel stroke position and generates an optimum damping force in accordance with the road and driving conditions.

Features

- Excellent riding comfort is assured when driving on general paved surface, since the damping force is kept low when the wheel stroke change is small.
- Both higher maneuverability on rough surfaces and increased stability at high speeds are assured, since the damping force increases as the wheel stroke becomes large.

Construction and operation

A metering pin is set up at the bottom center in the damper, which slides in a bore drilled in the axis of the piston rod.
A in the Figure indicates the condition where a hard damping force is being generated. Based on the same principle as the conventional gas-charged damper, the damping force is generated by the orifice in the piston and the disc valves provided over and under the piston.
B in the Figure shows the condition where a soft damping force is being generated. During this condition, the clearance produced between the thin diameter portion of the metering pin and the rod also serves as an oil passage (flow route marked with *), hence damping force is smaller than that generated in condition A.

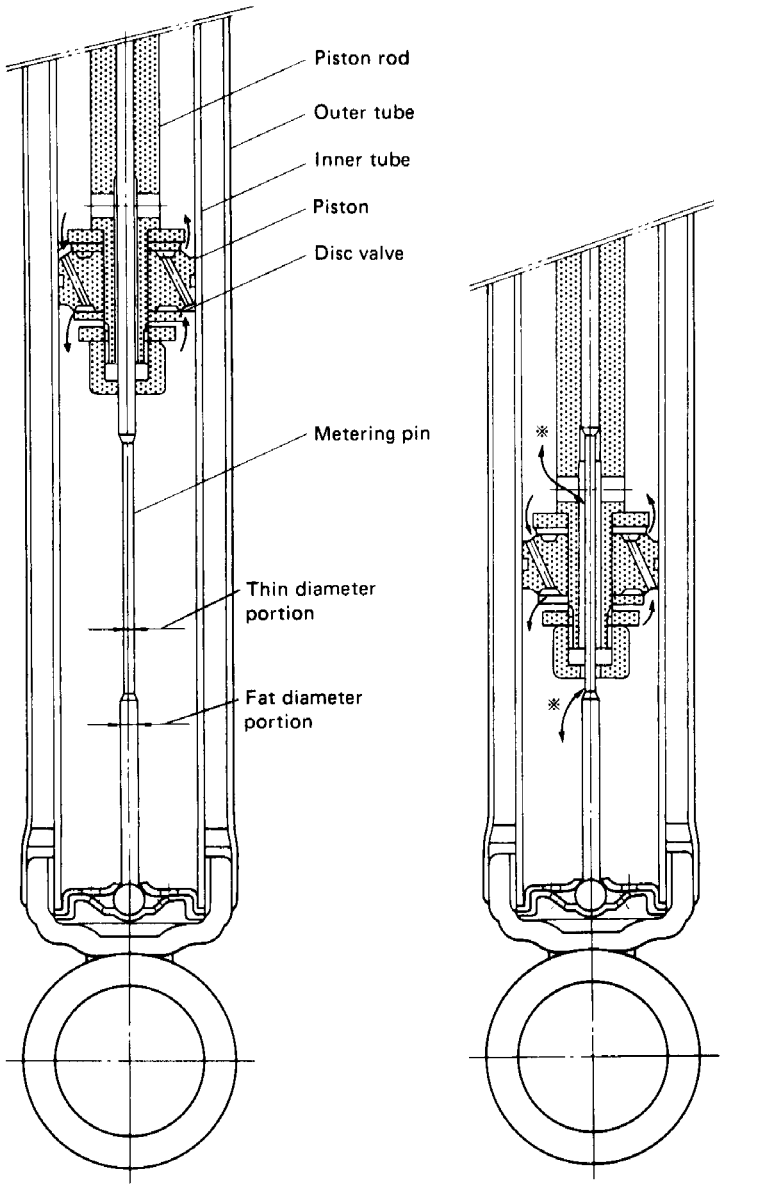

A. Oil flow for hard damping force

B. Oil flow for soft damping force

L4-126

Fig. 16

SPECIFICATIONS AND SERVICE DATA

SPECIFICATIONS

CONVENTIONAL SUSPENSION

				1800 cc FWD	2700 cc FWD
Front suspension	Stabilizer	Bar diameter mm (in)		19 (0.75)	20 (0.79)
	Coil spring	Coil diameter mm (in)		130 (5.12)	
		Coefficient of spring N/mm (kg/mm, lb/in)		25.5 (2.6, 146)	30.4 (3.1, 174)
	Damper strut	Outer cylinder length mm (in)		322.5 (12.70)	319 (12.56)
		Piston rod diameter mm (in)		20 (0.79)	22 (0.87)
		Damping force [at the piston speed] N (kg, lb)	Expansion	981 (100, 221)	
			Compression	490 (50, 110)	
Rear suspension	Stabilizer	Bar diameter mm (in)		16 (0.63)	
	Coil spring	Coil diameter mm (in)		78 (3.07)	
		Coefficient of spring N/mm (kg/mm, lb/in)		31.4 (3.2, 179)	
	Shock absorber	Outer cylinder length mm (in)		279 (10.98)	
		Piston rod diameter mm (in)		12.5 (0.492)	
		Damping force [at the piston speed 0.3 m (1.0 ft)/sec] N (kg, lb)	Expansion	981 (100, 221)	
			Compression	490 (50, 110)	

AIR (PNEUMATIC) SUSPENSION

				Front		Rear	
				1800 cc	2700 cc	1800 cc	2700 cc
Stabilizer	Bar diameter mm (in)			19 (0.75)	20 (0.79)	20 (0.79)	
Air suspension CP	Piston rod diameter mm (in)			20 (0.79)	22 (0.87)	12.5 (0.492)	
	Damping force [at the piston speed 0.3 m (1.0 ft)/sec] N (kg, lb)	Hard	Expansion	1,177 (120, 265)		1,372 (140, 309)	1,177 (120, 265)
			Compression	588 (60, 132)		588 (60, 132)	
		Soft	Expansion	686 (70, 154)	981 (100, 221)	981 (100, 221)	
			Compression	490 (50, 110)		490 (50, 110)	

WHEEL ALIGNMENT

				FWD			4WD		
				1800	2700		1800	2700	
Front	Camber (common difference: ±0°45')			0°			0°40'	0°50'	
	Caster (common difference: ±0°45')			4°05'			3°25'	3°30'	
	Toe			Normal	Minimum	Maximum	Normal	Minimum	Maximum
		Service limit	mm (in)	0 (0)	3 (0.12) IN	3 (0.12) OUT	5 (0.20) OUT	8 (0.31) OUT	2 (0.08) OUT
			Degrees: per wheel	0°	0°09' IN	0°09' OUT	0°15' OUT	0°24' OUT	0°06' OUT
		Service standard *3	mm (in)	0 (0)	1 (0.04) IN	1 (0.04) OUT	5 (0.20) OUT	6 (0.24) OUT	4 (0.16) OUT
			Degrees: per wheel	0°	0°03' IN	0°03' OUT	0°15' OUT	0°18' OUT	0°12' OUT
	Side slip with one occupant	Service limit	m/km (ft/mile)	IN 5 – OUT 5 (IN 26 – OUT 26)					
		Service standard *3	m/km (ft/mile)	IN 3 – OUT 3 (IN 16 – OUT 16)					
	Ground clearance *1		mm (in)	226^{+12}_{-22} ($8.90^{+0.47}_{-0.87}$)		216^{+12}_{-22} ($8.50^{+0.47}_{-0.87}$)	248^{+12}_{-22} ($9.76^{+0.47}_{-0.87}$)		253^{+12}_{-22} ($9.96^{+0.47}_{-0.87}$)
Rear	Camber (common difference: ±0°45')			0°			–0°10'		
	Toe			Normal		Minimum	Maximum		
		Service limit	mm (in)	0 (0)		3 (0.12) IN	3 (0.12) OUT		
			Degrees: per wheel	0°		0°09' IN	0°09' OUT		
		Service standard *3	mm (in)	0 (0)		2 (0.08) IN	2 (0.08) OUT		
			Degrees: per wheel	0°		0°06' IN	0°06' OUT		
	Side slip with one occupant		m/km (ft/mile)	IN 5 – OUT 5 (IN 26 – OUT 26)					
	Ground clearance *2		mm (in)	203^{+10}_{-20} ($7.99^{+0.39}_{-0.79}$)		200^{+10}_{-20} ($7.87^{+0.39}_{-0.79}$)	250^{+10}_{-20} ($9.84^{+0.39}_{-0.79}$)		248^{+10}_{-20} ($9.76^{+0.39}_{-0.79}$)

***1 Measure the ground clearance at center of front end face of the transverse link attaching bolt.**
***2 Measure the ground clearance at lower face of the crossmember.**
***3 If the inspection data is out of "SERVICE LIMIT", readjust within "SERVICE STANDARD".**

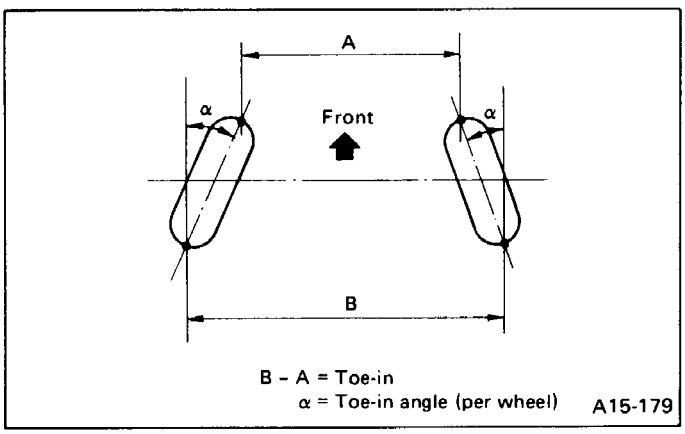

Fig. 17 Toe-in

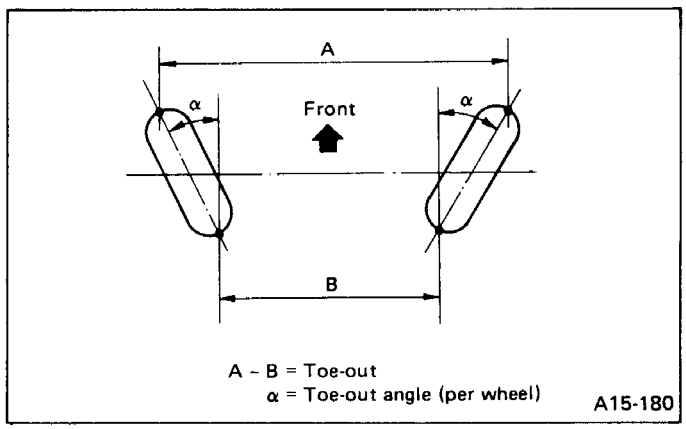

Fig. 18 Toe-out

SERVICE DATA

CONVENTIONAL SUSPENSION

Front strut	Piston rod deflection	Limit	0.8 mm (0.031 in)/20 N (2 kg, 4 lb)

AIR (PNEUMATIC) SUSPENSION

Recommended grease	NOK SEALUB S-4
Recommended O-ring	NOK material; A980

COMPONENT PARTS

Conventional Suspension

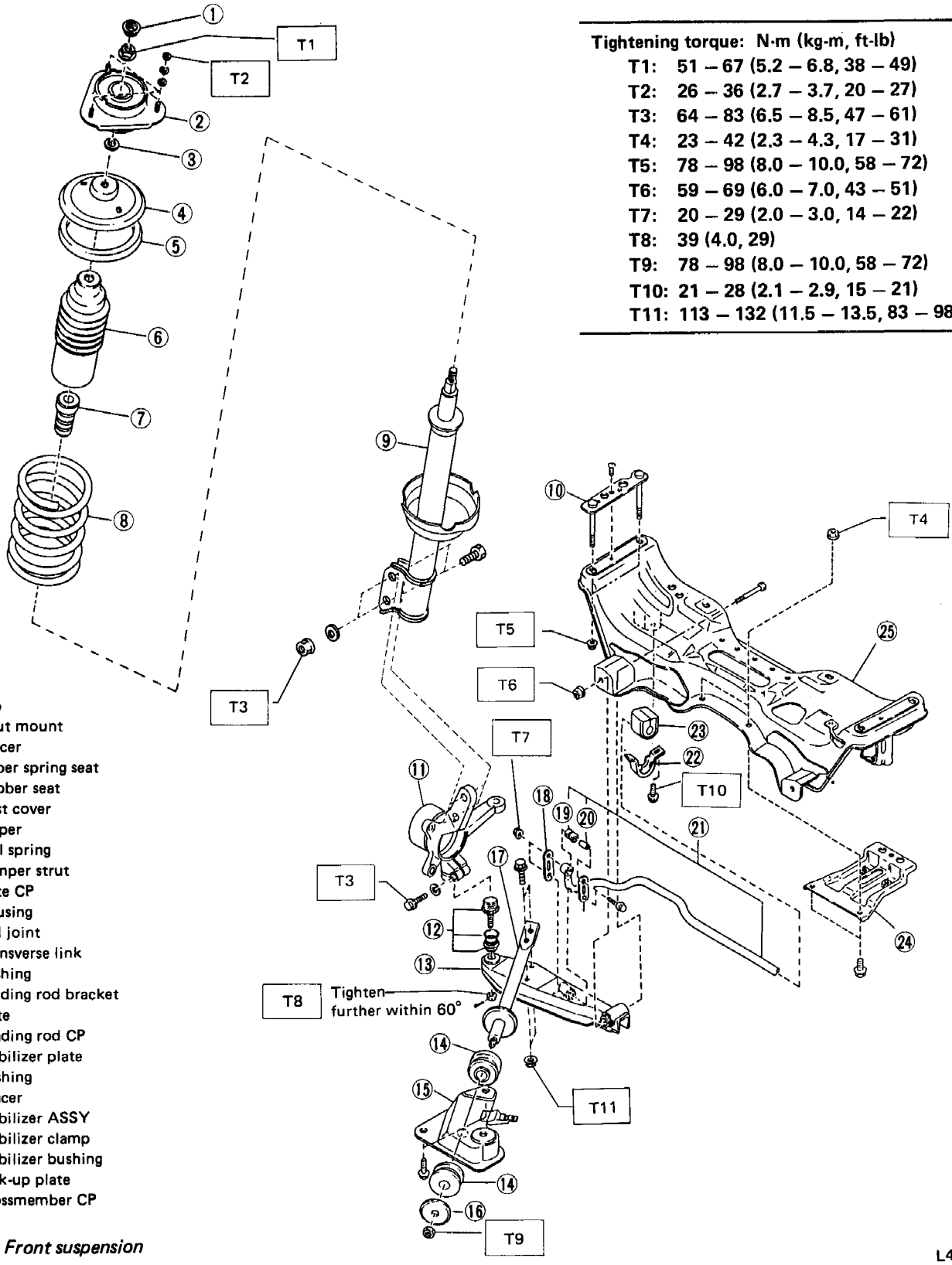

Tightening torque: N·m (kg-m, ft-lb)

T1:	51 – 67 (5.2 – 6.8, 38 – 49)
T2:	26 – 36 (2.7 – 3.7, 20 – 27)
T3:	64 – 83 (6.5 – 8.5, 47 – 61)
T4:	23 – 42 (2.3 – 4.3, 17 – 31)
T5:	78 – 98 (8.0 – 10.0, 58 – 72)
T6:	59 – 69 (6.0 – 7.0, 43 – 51)
T7:	20 – 29 (2.0 – 3.0, 14 – 22)
T8:	39 (4.0, 29)
T9:	78 – 98 (8.0 – 10.0, 58 – 72)
T10:	21 – 28 (2.1 – 2.9, 15 – 21)
T11:	113 – 132 (11.5 – 13.5, 83 – 98)

1 Cap
2 Strut mount
3 Spacer
4 Upper spring seat
5 Rubber seat
6 Dust cover
7 Helper
8 Coil spring
9 Damper strut
10 Plate CP
11 Housing
12 Ball joint
13 Transverse link
14 Bushing
15 Leading rod bracket
16 Plate
17 Leading rod CP
18 Stabilizer plate
19 Bushing
20 Spacer
21 Stabilizer ASSY
22 Stabilizer clamp
23 Stabilizer bushing
24 Jack-up plate
25 Crossmember CP

Fig. 19 Front suspension

L4-1365

Tightening torque: N-m (kg-m, ft-lb)

- **T1: 18 – 25 (1.8 – 2.6, 13 – 19)**
- **T2: 10 – 20 (1.0 – 2.0, 7.2 – 14.5)**
- **T3: 88 – 127 (9.0 – 13.0, 65 – 94)**
- **T4: 88 – 118 (9.0 – 12.0, 65 – 87)**
- **T5: 18 – 22 (1.8 – 2.2, 13 – 16)**
- **T6: 69 – 118 (7.0 – 12.0, 51 – 87)**
- **T7: 88 – 103 (9.0 – 10.5, 65 – 76)**
- **T8: 69 – 88 (7.0 – 9.0, 51 – 65)**
- **T9: 118 – 147 (12.0 – 15.0, 87 – 108)**
- **T10: 127 – 147 (13.0 – 15.0, 94 – 108)**
- **T11: 74 – 88 (7.5 – 9.0, 54 – 65)**

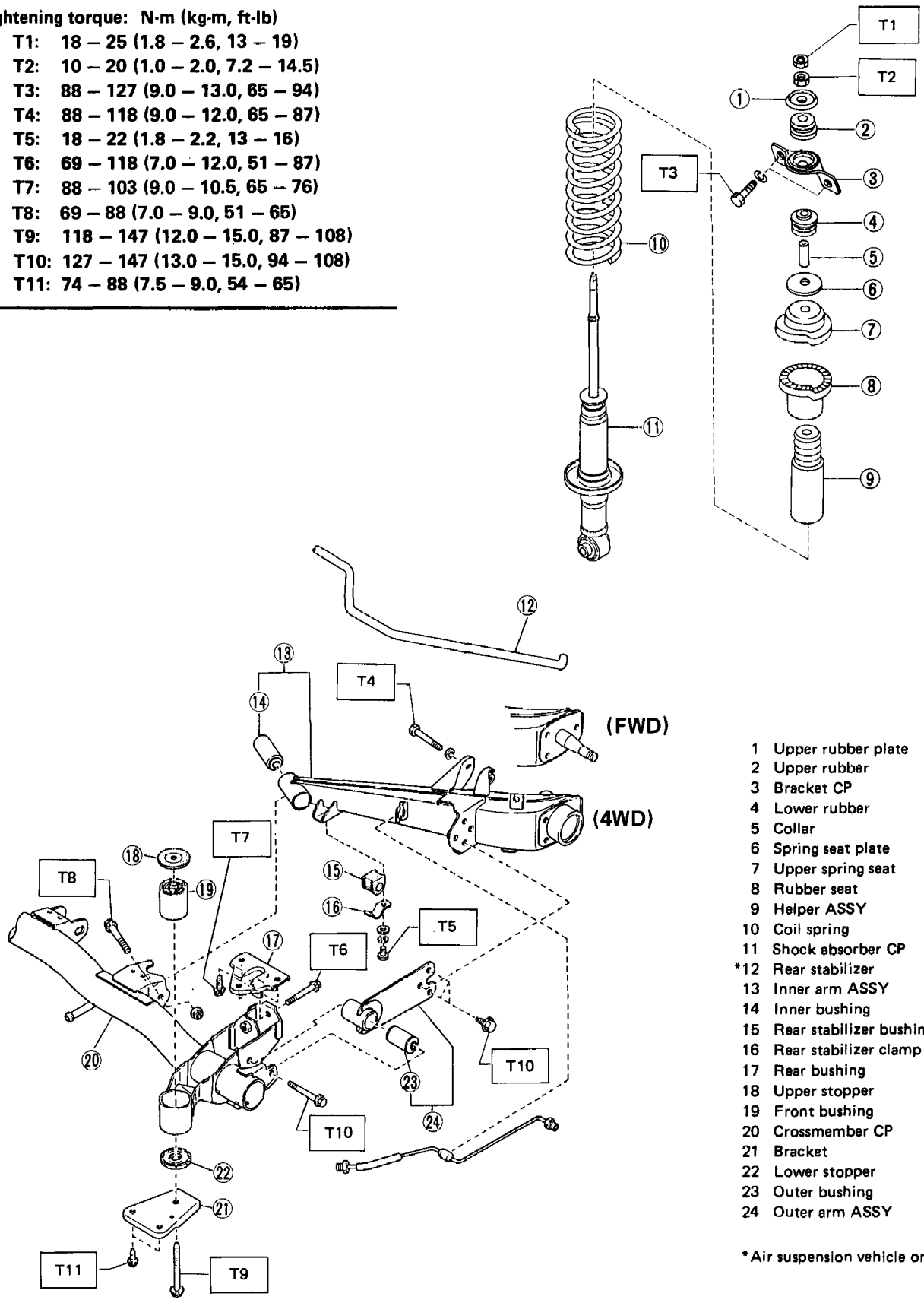

1 Upper rubber plate
2 Upper rubber
3 Bracket CP
4 Lower rubber
5 Collar
6 Spring seat plate
7 Upper spring seat
8 Rubber seat
9 Helper ASSY
10 Coil spring
11 Shock absorber CP
*12 Rear stabilizer
13 Inner arm ASSY
14 Inner bushing
15 Rear stabilizer bushing
16 Rear stabilizer clamp
17 Rear bushing
18 Upper stopper
19 Front bushing
20 Crossmember CP
21 Bracket
22 Lower stopper
23 Outer bushing
24 Outer arm ASSY

*Air suspension vehicle only

Fig. 20 Rear suspension

L4-1294

Air (Pneumatic) Suspension

Tightening torque: N·m (kg-m, ft-lb)
T1: 5 – 15 (0.5 – 1.5, 3.6 – 11)
T2: 51 – 67 (5.2 – 6.8, 38 – 49)
T3: 26 – 36 (2.7 – 3.7, 20 – 27)
T4: 18 – 25 (1.8 – 2.6, 13 – 19)
T5: 10 – 20 (1.0 – 2.0, 7 – 14)
T6: 5.4 – 9.3 (0.55 – 0.95, 4.0 – 6.9)

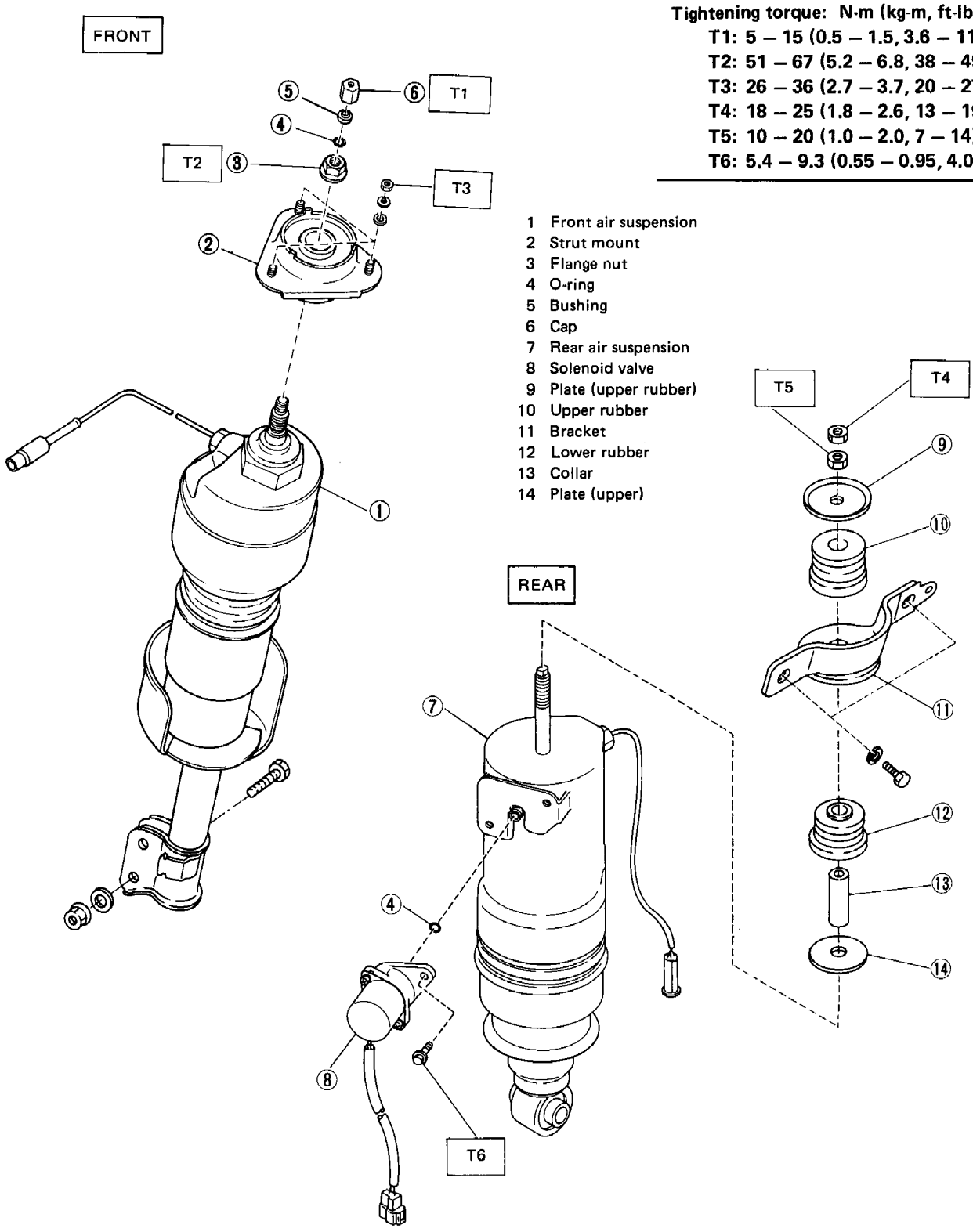

Fig. 21 Front and rear air suspension

L4-1366

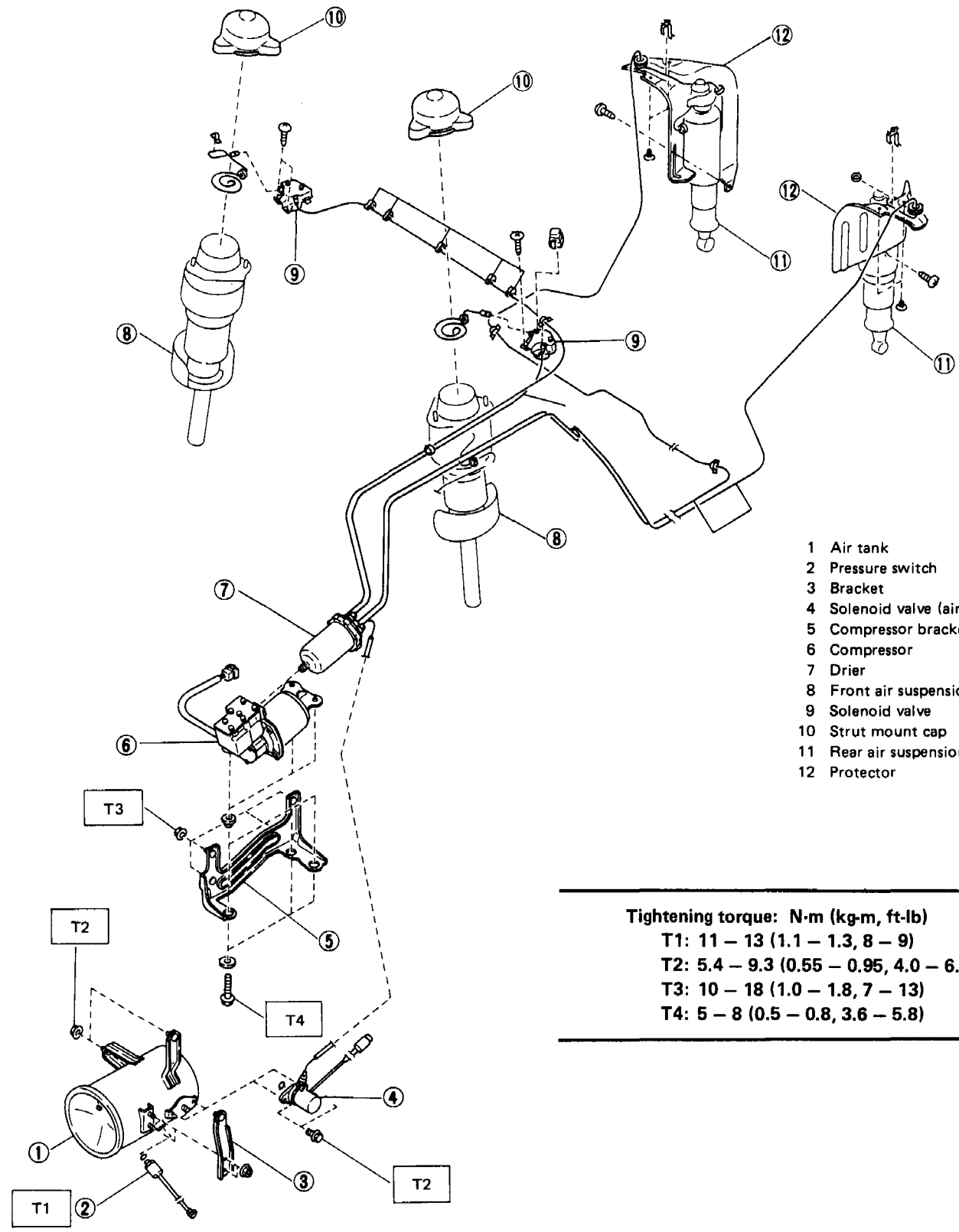

1 Air tank
2 Pressure switch
3 Bracket
4 Solenoid valve (air charge)
5 Compressor bracket
6 Compressor
7 Drier
8 Front air suspension
9 Solenoid valve
10 Strut mount cap
11 Rear air suspension
12 Protector

Tightening torque: N·m (kg-m, ft-lb)
T1: 11 – 13 (1.1 – 1.3, 8 – 9)
T2: 5.4 – 9.3 (0.55 – 0.95, 4.0 – 6.9)
T3: 10 – 18 (1.0 – 1.8, 7 – 13)
T4: 5 – 8 (0.5 – 0.8, 3.6 – 5.8)

Fig. 22

L4-1010

SERVICE PROCEDURE FOR CONVENTIONAL SUSPENSION

Inspection and Adjustment

The following chart outlines the basic inspection and adjustment procedures for the entire front suspension system. Regarding specific procedures for individual parts, refer to the applicable instructions set forth in this manual.

● Front Suspension

Item to be checked	Description	Remarks
Coil spring	Vehicle posture Park the vehicle on a level, solid surface, and check for lateral inclination of the vehicle. **a. Make sure that all tires are inflated to the specified pressure.** **b. If any noticeable lateral vehicle inclination is detected visually, determine whether it is due to permanent deformation of coil spring(s), improper body alignment, or other factors.** **c. If vehicle inclination (to either side) is due to permanent deformation of coil spring, remove the coil spring and replace it.** **d. Replace the coil spring if it is cracked, broken or damaged.**	Visual inspection
Damper strut	Damping Force/Noise Rock the left side of the vehicle up and down, and then rock the right side, to check for noise or variances in vehicle posture. **If the up-and-down movement (when hands have been released) continues longer than usual or if any abnormal noise is detected, check the condition of the strut itself.** **Refer to instructions for inspection procedures.** Oil leakage Check for oil leaks at or around the lower portion of the strut and oil seal ASSY. **It is normal for a trace of oil to be oozing at the oil seal ASSY.** Cracks, Damage or Deformation Check the outer shell for any cracks, damage or deformation. Replace the dust cover if it is damaged.	Visual and tactile inspection

Item to be checked	Description	Remarks
Wheel alignment	Preliminary Inspection Before checking/adjusting front wheel alignment, be sure to make a prior inspection of the following points and repair/replace the damaged portions/parts as necessary. • Tire pressure • Wear or damage of tires • Wheel balance • Looseness on suspension • Looseness and smooth operation on axle linkage and connection • Looseness and smooth operation on steering linkage and connection • Shock absorber operation and oil leakage • Damage, deformation etc. on body attaching portion of suspension, axle and steering linkage and connection • Vehicle height [It is recommended that the difference of vehicle height between the front and rear ends, or the left and right sides is less than 10 mm (0.39 in) in the unloaded condition.] • Stain, rust, grease leakage etc. on front end parts Toe Adjustment Inflate all tires to the specified pressure, and park the vehicle (unloaded) on a level, solid surface. Loosen both the left and right lock nuts ①. If the toe is not within the specified value when measured with a toe gauge, turn the left and right tie rods ② equal amounts until the toe is within the specified range. 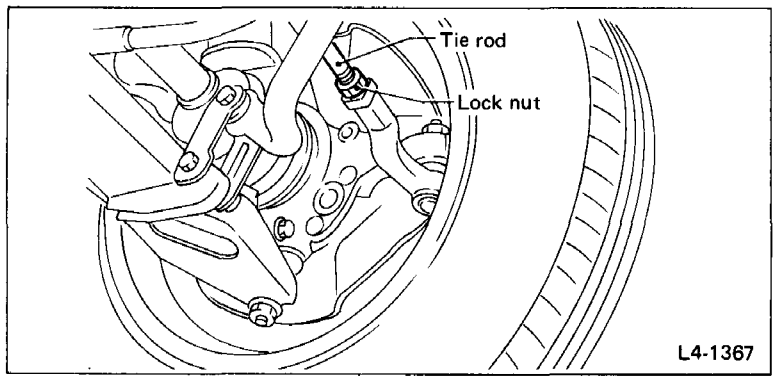 *Fig. 23* **Torque (lock nut):** **78 – 88 N·m (8 – 9 kg-m, 58 – 65 ft-lb)** **a. If the tie-rod and the tie-rod end have been disassembled, assemble these parts in advance so that the toe is near the specified range.** **b. Both the left and right tie-rods are right-hand threaded. To increase toe-in, turn both tie-rods counterclockwise equal amounts (as viewed from the outside of the vehicle).** **c. Always adjust the toe after steering angle adjustment.** **d. Refer to the "Specifications" for the specified toe.**	Toe gauge

Item to be checked	Description	Remarks
Wheel alignment (continued)	Camber and Caster Neither camber nor caster can be adjusted. To measure camber and caster, place the wheel to be measured on the turning radius gauge ①, and make sure the vehicle is level. Set ADAPTER ③ (926500000) into the center of the wheel, and then install the alignment gauge ②. 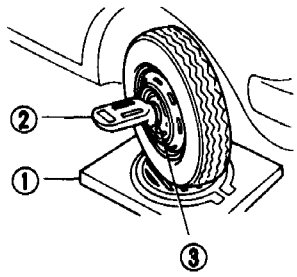 A15-147 *Fig. 24* **a. Refer to the "Specifications" for the camber and caster values.** **b. If the camber or caster measurement is not within the specified range, check for body alignment, deformed transverse link or faulty parts. Repair or replace the parts, if necessary.**	Turning radius gauge Alignment gauge ADAPTER (926500000)
Entire front suspension	Looseness Check each mounting portion of the following for looseness and inspect the castle nuts for missing cotter pins. (1) Strut mount to vehicle body (2) Damper strut piston rod to strut mount (3) Damper strut to housing (4) Housing to ball joint (5) Ball joint to transverse link (6) Transverse link to leading rod (7) Leading rod to leading rod bracket (8) Transverse link to front crossmember (9) Crossmember to body (10) Stabilizer to front crossmember (11) Stabilizer to transverse link (12) Leading rod bracket to body Cracks, Damage or Deformation Check the following parts for cracks, damage or deformation. (1) Crossmember (front) (2) Damper strut (3) Housing (4) Ball joint (5) Transverse link (6) Leading rod (7) Stabilizer (8) Leading rod bracket Rubber Parts Check the following parts for deterioration, cracks or damage. (1) Strut mount (2) Damper strut dust cover (3) Ball joint boot (4) Transverse link bushing (5) Leading rod bushing (6) Stabilizer bushing	Visual inspection Visual inspection

● Rear Suspension

Item to be checked	Description	Remarks
Coil spring	Vehicle posture Park the vehicle on a level, solid surface, and check for lateral inclination of the vehicle. **a. Make sure that all tires are inflated to the specified pressure.** **b. If any noticeable lateral vehicle inclination is detected visually, determine whether it is due to permanent deformation of coil spring(s), improper body alignment, or other factors.** **c. If vehicle inclination (to either side) is due to permanent deformation of coil spring, remove the coil spring and replace it.** **d. Replace the coil spring if it is cracked, broken or damaged.**	Visual inspection
Shock absorber	Damping Force/Noise Rock the left side of the vehicle up and down, and then rock the right side, to check for noise or variances in vehicle posture. **If the up-and-down movement (when hands have been released) continues longer than usual or if any abnormal noise is detected, check the condition of shock absorber itself.** **Refer to instructions for inspection procedures.** Oil leakage Check for oil leaks at or around the lower portion of shock absorber and oil seal. **It is normal for a trace of oil to be oozing at the oil seal.** Cracks, Damage or Deformation Check the outer shell for any cracks, damage or deformation. Replace dust cover or bushings if damaged.	Visual and tactile inspection

ADJUSTING PROCEDURE OF REAR SUSPENSION ALIGNMENT

Toe

1) Jack up rear of vehicle as shown in "Pre-Delivery Inspection", and remove rear wheels.
2) Loosen outer arm mounting bolts.

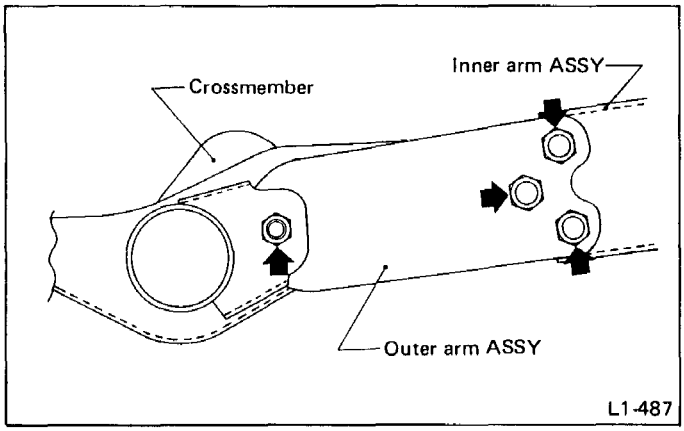

Fig. 25

3) When toe-in is excessive, tighten outer arm mounting bolts shown in Fig. 25 while pushing end of spindle towards rear of vehicle (in direction of arrow in Fig. 26). When toe-out is excessive, tighten outer arm mounting bolts while pulling end of spindle toward front of vehicle (in opposite direction of arrow in Fig. 26).

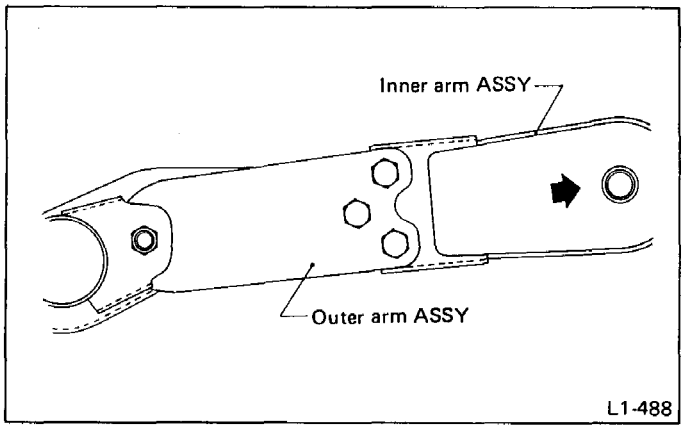

Fig. 26

4) Adjust toe within service standard by repeating steps in 2) and 3) above for both right and left wheels.

Camber

1) Jack up rear of vehicle as shown in "Pre-Delivery Inspection", and remove wheel whose camber angle is out of standard.
2) Remove bolt linking lower end of shock absorber to inner arm.
3) Then, loosen outer arm mounting bolts shown in Fig. 25.
4) If camber angle is excessive in ⊕ direction, use a piece of wood as a lever and change relative angle between inner arm and outer arm so that angle θ formed by inner arm and outer arm centerlines (Fig. 27) increases. Then, tighten outer arm mounting bolts.

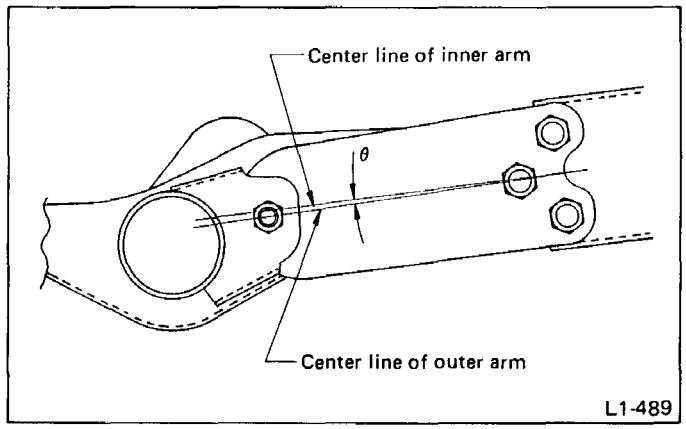

Fig. 27

5) If camber angle is excessive in ⊖ direction, use a piece of wood as a lever and change relative angle between inner and outer arms so that angle θ formed by inner arm and outer arm centerlines decreases. Then, tighten outer arm mounting bolts.
6) Adjust camber angle to conform to service standard by repeating steps 4) and 5) above.

a. Adjusting toe results in a change in camber angle, while adjusting camber angle causes a change of toe. Therefore, when either is adjusted, always check that the other remains within service standard.
b. After both toe and camber angle have been adjusted within service standard, be sure to tighten bolts to the specified torque.

Ground Clearance Measuring (4WD Models Only)

Ground clearances of front and rear suspensions of 4WD vehicles can be measured according to the following procedure.

a. Before measuring the ground clearance, check air pressure of the all tires and adjust to the specified pressure if necessary.
b. Place the vehicle under unloaded condition on the flat ground.

Front Ground Clearance

Vehicle	Specified ground clearance
1800 4WD	255^{+12}_{-22} mm ($10.04^{+0.47}_{-0.87}$ in)
2700 4WD	253^{+12}_{-22} mm ($9.96^{+0.47}_{-0.87}$ in)

Check the ground clearance by measuring between front end of transverse link attaching bolt and ground.

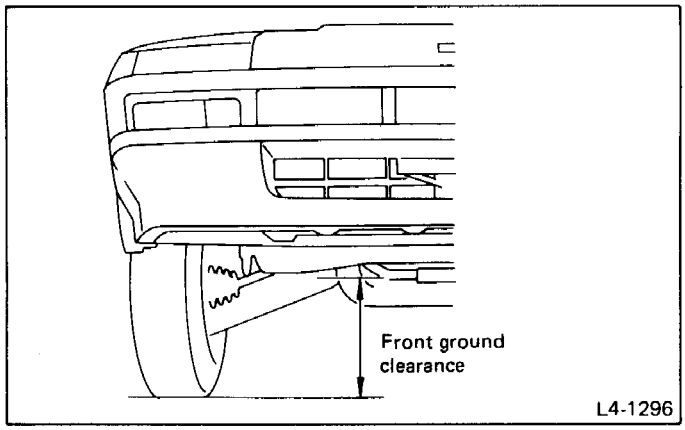

Fig. 28

If ground clearance is out of the specified range in the above table, replace the coil spring.

Rear Ground Clearance

Vehicle	Specified ground clearance
1800 4WD	250^{+10}_{-20} mm ($9.84^{+0.39}_{-0.79}$ in)
2700 4WD	248^{+10}_{-20} mm ($9.76^{+0.39}_{-0.79}$ in)

Measure the ground clearance (from lowest point of cross-member pipe to the ground).

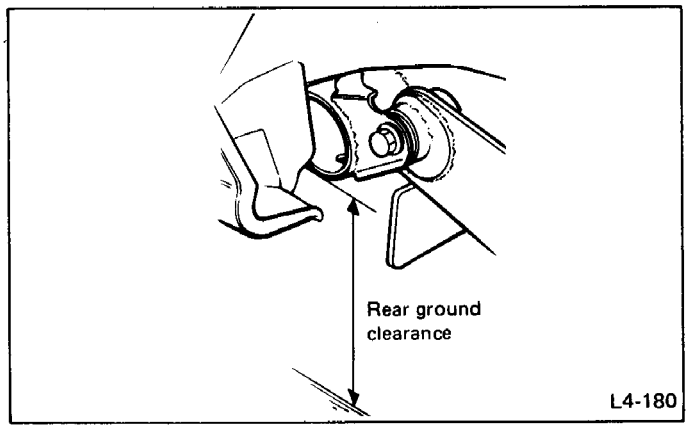

Fig. 29

Front Suspension Assembly

REMOVAL

1) Disconnect ground cable from battery.
2) Apply parking brake.
3) Loosen front wheel nuts.
4) Jack up vehicle, support it with safety stands (rigid racks) and remove front wheels.
5) Release parking brake.
6) Remove parking brake cable bracket from transverse link.

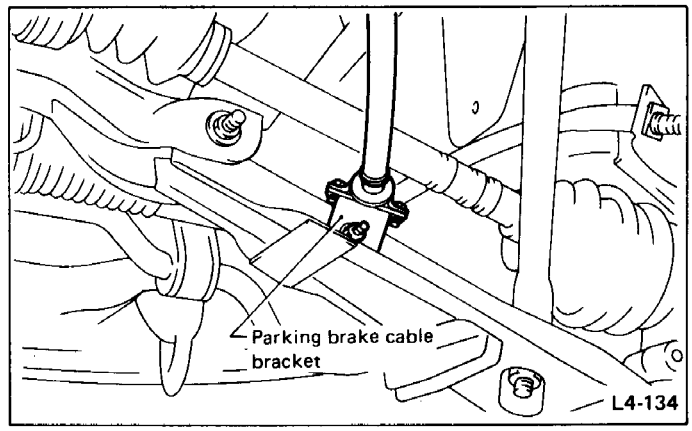

Fig. 30

7) Disconnect parking brake cable end.
   (1) Remove outer cable clip.
   (2) Disconnect the cable end from the caliper lever.

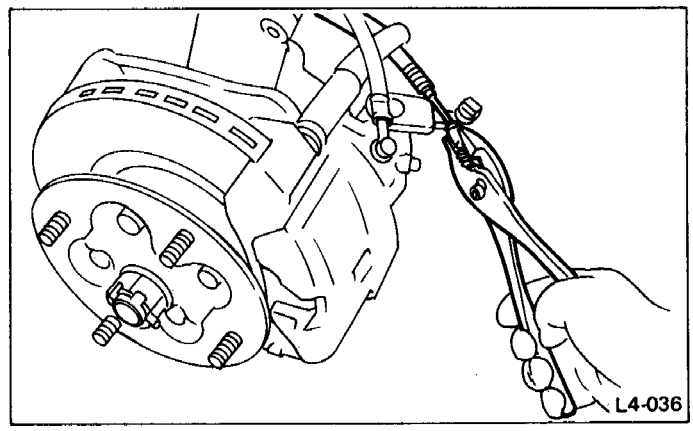

Fig. 31

8) Disconnect brake hose from brake pipe at apron bracket.

a. Fit air bleeder cap onto brake pipe to prevent brake fluid from pouring.
b. When removing or installing flare nut, use flare nut wrench without fail.

9) Drive out spring pin of D.O.J. at inner end by using a steel rod of 6 mm (0.24 in) diameter.

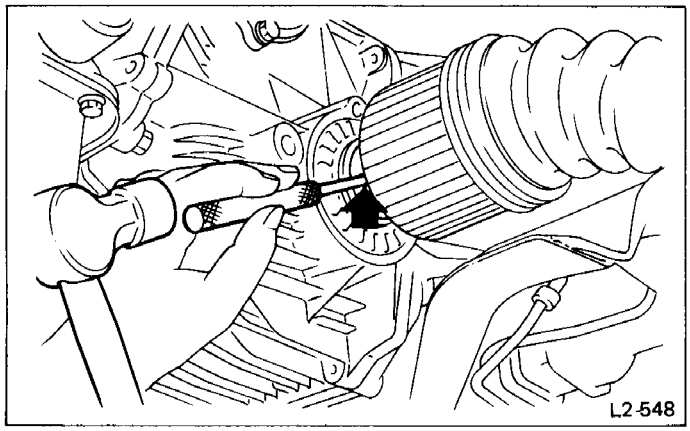

Fig. 32

10) Disconnect the end of stabilizer from transverse link.

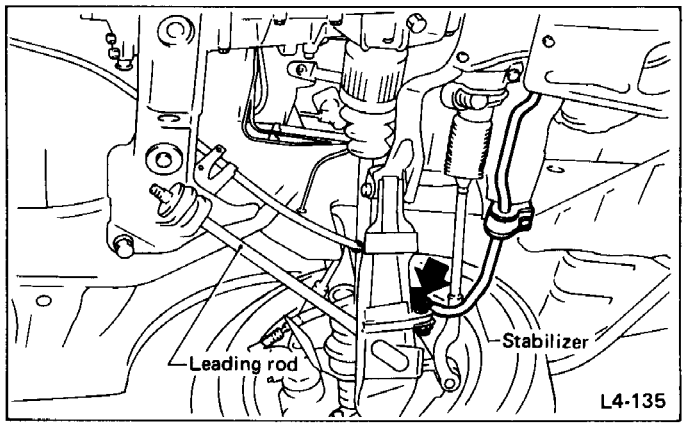

Fig. 33

11) Remove leading rod from leading rod bracket.
12) Disconnect transverse link bush from front crossmember.

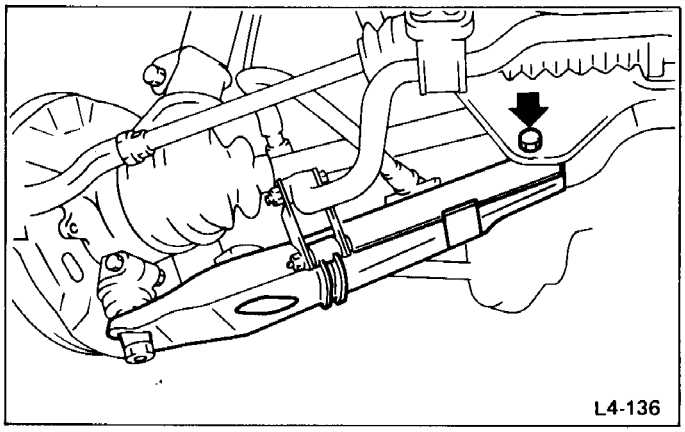

Fig. 34

13) Take out transverse link along with leading rod.

14) Pull out cotter pin and remove castle nut. Then disconnect the ball stud of tie-rod end ball joint from housing.

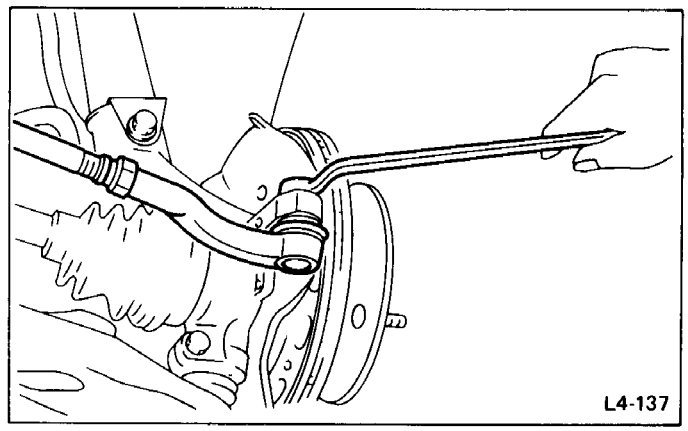

Fig. 35 Installing tie-rod end

15) Loosen nuts connecting strut mount to body, then pull D.O.J. out of differential spindle, and remove front suspension ASSY from body.

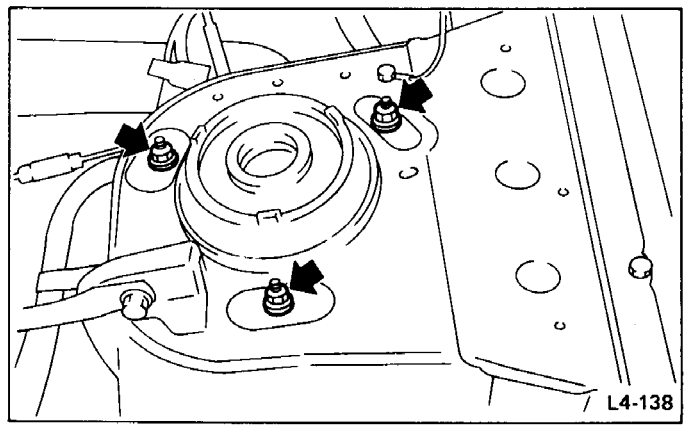

Fig. 36

INSPECTION

Check the removed parts for any wear, damage and cracks, and correct or replace if defective.

INSTALLATION

a. Carry out the specified adjustments for control system.
b. Be sure to measure wheel alignment after installing suspension.
c. Replace cotter pins and axle shaft spring pins with new ones when installing.

1) Install strut mount to body.

Torque:
26 – 36 N·m (2.7 – 3.7 kg-m, 20 – 27 ft-lb)

2) Align the spring pin holes of D.O.J. and differential spindle, and insert D.O.J. to differential spindle.

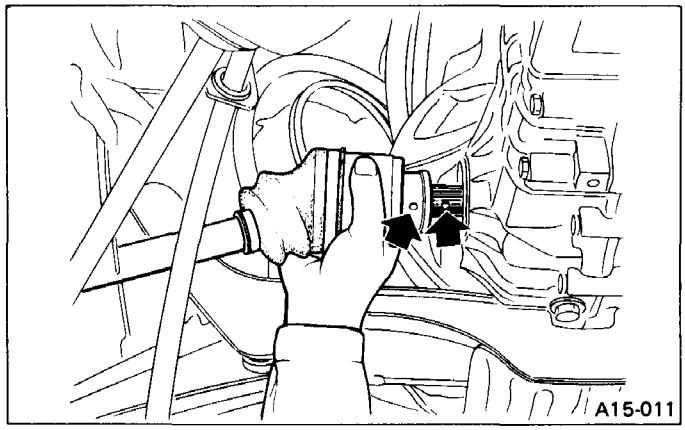

Fig. 37

3) Install leading rod to leading rod bracket according to the following procedure.
(1) Install a bush to leading rod.
(2) Install leading rod to leading rod bracket, besides install a bush, a plate and a self-lock nut.
(3) Tighten self-lock nut.

Torque:
78 – 98 N·m (8.0 – 10.0 kg-m, 58 – 72 ft-lb)

Self-lock nut should be replaced with new one whenever it is removed.

4) Connect D.O.J. and differential spindle by driving spring pin in.

a. Make sure that the holes are aligned before driving the spring pin in.
b. When driving the spring pin in, always use new one.

5) Install transverse link temporarily to crossmember by using bolt and self-lock nut.
6) Install tie-rod end ball joint to the housing knuckle arm.

Torque (Castle nut):
25 – 29 N·m (2.5 – 3.0 kg-m, 18 – 22 ft-lb)

After tightening the nut to the specified torque, adjust groove on the nut and hole on the ball joint by retightening the nut from 0 to 60 degrees.

7) Then install new cotter pin into the hole, and bend it firmly.

8) Connect stabilizer end bracket to transverse link.

Torque:
20 – 29 N·m (2.0 – 3.0 kg-m, 14 – 22 ft-lb)

9) Attach brake hose to apron bracket by using clip, and then connect brake hose to brake pipe.

Torque:
13 – 18 N·m (1.3 – 1.8 kg-m, 9 – 13 ft-lb)

10) Install parking brake cable bracket to transverse link.

Torque (Bolt):
10 – 16 N·m (1.0 – 1.6 kg-m, 7 – 12 ft-lb)

11) Install parking brake outer cable by attaching outer cable clip to brake caliper.
Install the parking brake cable end to the caliper lever.
12) Bleed air from brake system.
13) Install wheels.

Torque (wheel nut):
78 – 98 N·m (8 – 10 kg-m, 58 – 72 ft-lb)

14) Lower vehicle and tighten self-lock nut which installs transverse link to crossmember.

Torque (self-lock nut):
59 – 69 N·m (6.0 – 7.0 kg-m, 43 – 51 ft-lb)

Front Strut Assembly

REMOVAL

1) Disconnect ground cable from battery.
2) Apply parking brake.
3) Loosen front wheel nuts.
4) Jack up vehicle, support it with safety stands (rigid racks) and remove front wheels.
5) Release parking brake.
6) Disconnect brake hose from caliper body.

Use brake hose cap to prevent brake fluid from pouring.

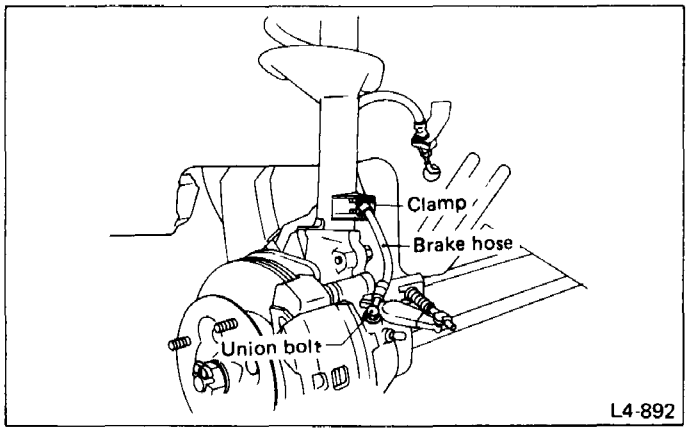

Fig. 38

7) Pull out brake hose securing clip and detach brake hose from damper strut bracket.
8) Remove bolt which connects damper strut to housing.
9) Remove bolt which connects damper strut bracket to housing.
10) Pull strut out of housing gradually and carefully with housing ASSY placed downward.

If strut is rusted, apply sufficient "CRC" on housing and strut before pulling strut out.

11) Remove nuts clamping strut mount to body.
12) Remove strut ASSY from body.

DISASSEMBLY

1) Mount COIL SPRING COMPRESSOR (926110000) to a vice.

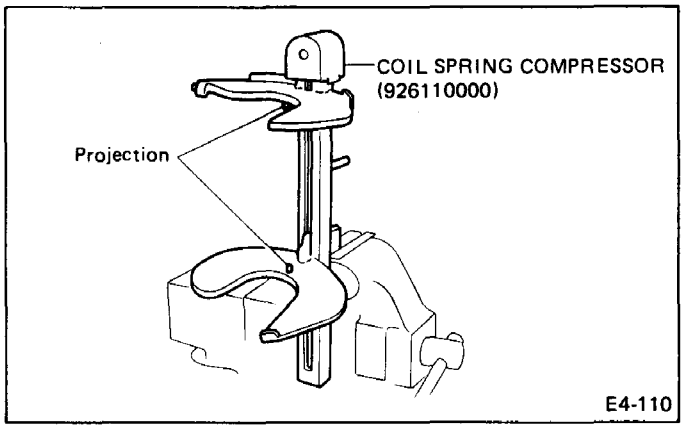

Fig. 39

2) Set the strut ASSY to COIL SPRING COMPRESSOR.

a. Be sure to use the special tool in order to avoid an accident.
b. Set the projections of COIL SPRING COMPRESSOR to the inner diameter side of coil spring.

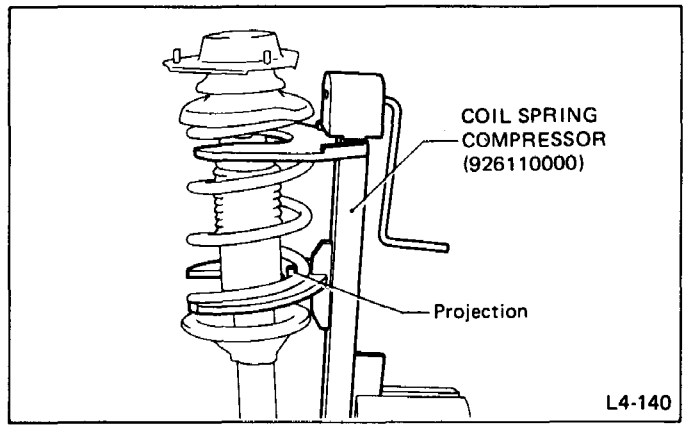

Fig. 40

3) Compress the coil spring by carefully turning the coil spring compressor handle.
(Compress the spring until it comes off the strut upper seat surface.)
4) Loosen the nut that connects the strut mount and the rod.

Fit SPANNER (926510000) into the holes of spring seat, and loosen the nut using a 17 mm box wrench.

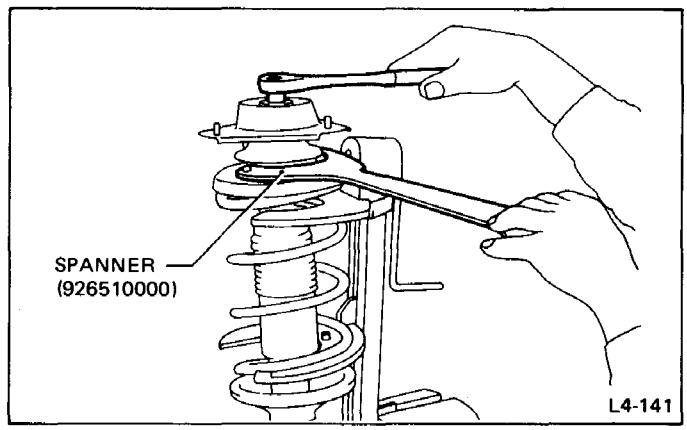

Fig. 41

5) Remove the strut mount and other minor parts.

Use care not to drop spacer.

6) Return carefully the coil spring compressor handle to the original position, and take out the coil spring and strut after making sure that the spring has been stretched fully.

Take out the coil spring, using care not to cause the spring to contact the strut rod.

INSPECTION

Check the disassembled parts for cracks, damage and wear, and replace with new parts if defective.

Damper strut

1) Check for oil leakage.
2) Move the piston rod up and down to check its smooth operation without any binding.
3) Deflection of piston rod

Measure the deflection as follows:
Fix the outer shell and fully extend the rod. Set a dial gauge at the end of the rod, and apply a weight of ±20 N (±2 kg, ±4 lb) to the threaded portion. Read the dial gauge indication. The amplitude of the gauge needle pointer is the deflection of the rod.

Limit of deflection:
Less than 0.8 mm (0.031 in)

If the deflection is greater, replace the strut.

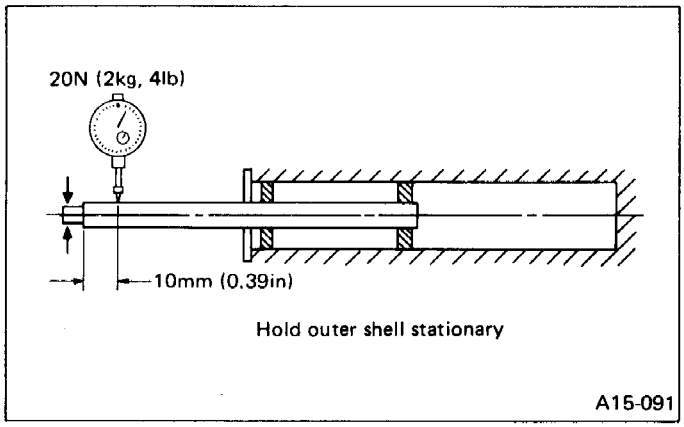

Fig. 42

Strut mount

1) Check rubber part for creep, cracks and deterioration, and replace it with new one if defective.
2) If distortion is found on its connecting surface to body, replace it with a new one.

Dust cover

If any cracks or damage are found, replace it with a new one.

Coil spring

One having permanent strain should be replaced with a new one. When vehicle posture is uneven, although there are no considerable reasons like tire puncture, uneven loading, etc., check coil spring for its free length, cracks, etc., referring to specifications, and replace it with a new one if defective.

Helper

Replace it with new one if cracked or damaged.

ASSEMBLY

1) Compress the coil spring with COIL SPRING COMPRESSOR (926110000).

Make sure that the vertical installing direction of coil spring is as shown below.

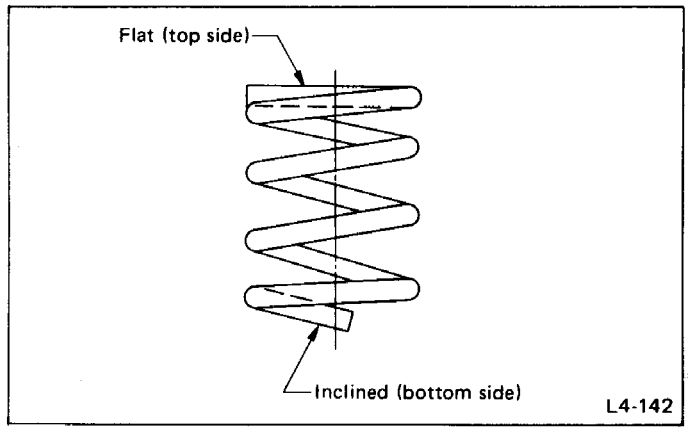

Fig. 43

2) Set the coil spring correctly so that its end face fits well into the spring seat as shown.

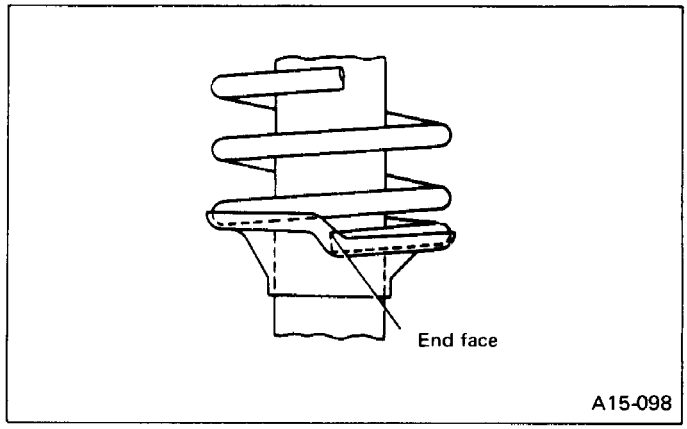

Fig. 44

3) Install helper and dust cover to the piston rod.
4) Pull the piston rod fully upward, and install rubber seat and spring seat.
5) Install sleeve to the piston rod.
6) Install strut mount to the piston rod, and tighten the self-lock nut temporarily.

Be sure to use a new self-lock nut.

7) Loosen COIL SPRING COMPRESSOR carefully.
8) While fixing the spring seat with SPANNER (926510000) tighten the self-lock nut with a box wrench.

Tightening torque:
51 – 67 N·m (5.2 – 6.8 kg-m, 38 – 49 ft-lb)

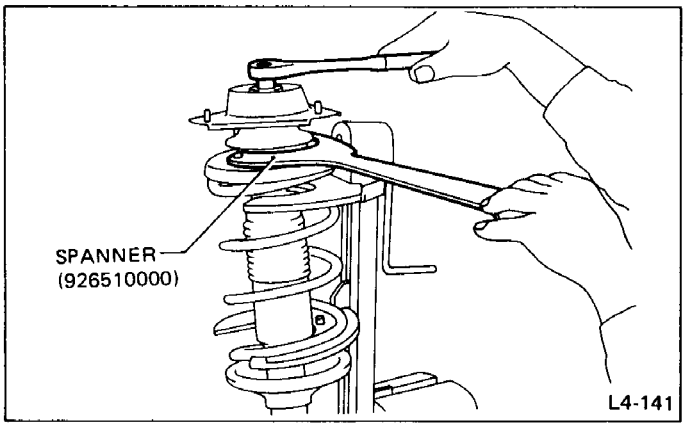

Fig. 45

INSTALLATION

Install the strut ASSY in the reverse sequence of the removal procedure.

Be sure to bleed air from brake system.

Tightening torque:
Nut (Strut mount to body)
26 – 36 N·m (2.7 – 3.7 kg-m, 20 – 27 ft-lb)
Bolt (Damper strut bracket to housing)
and
Bolt (Damper strut to housing)
38 – 50 N·m (3.9 – 5.1 kg-m, 28 – 37 ft-lb)
Disc brake union bolt
15 – 21 N·m (1.5 – 2.1 kg-m, 11 – 15 ft-lb)
Wheel nut:
78 – 98 N·m (8.0 – 10.0 kg-m, 58 – 72 ft-lb)

Front Stabilizer

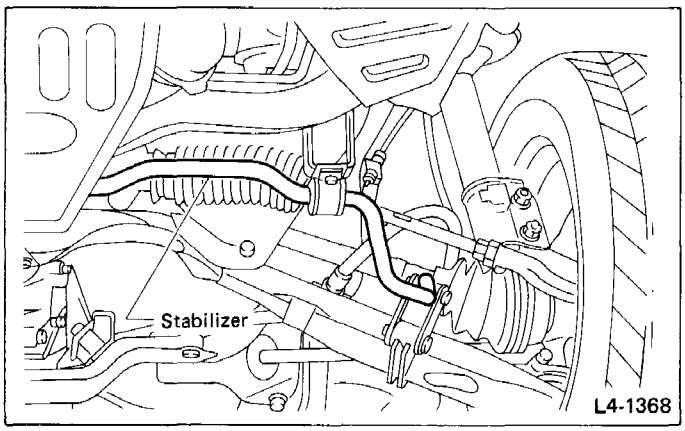

Fig. 46

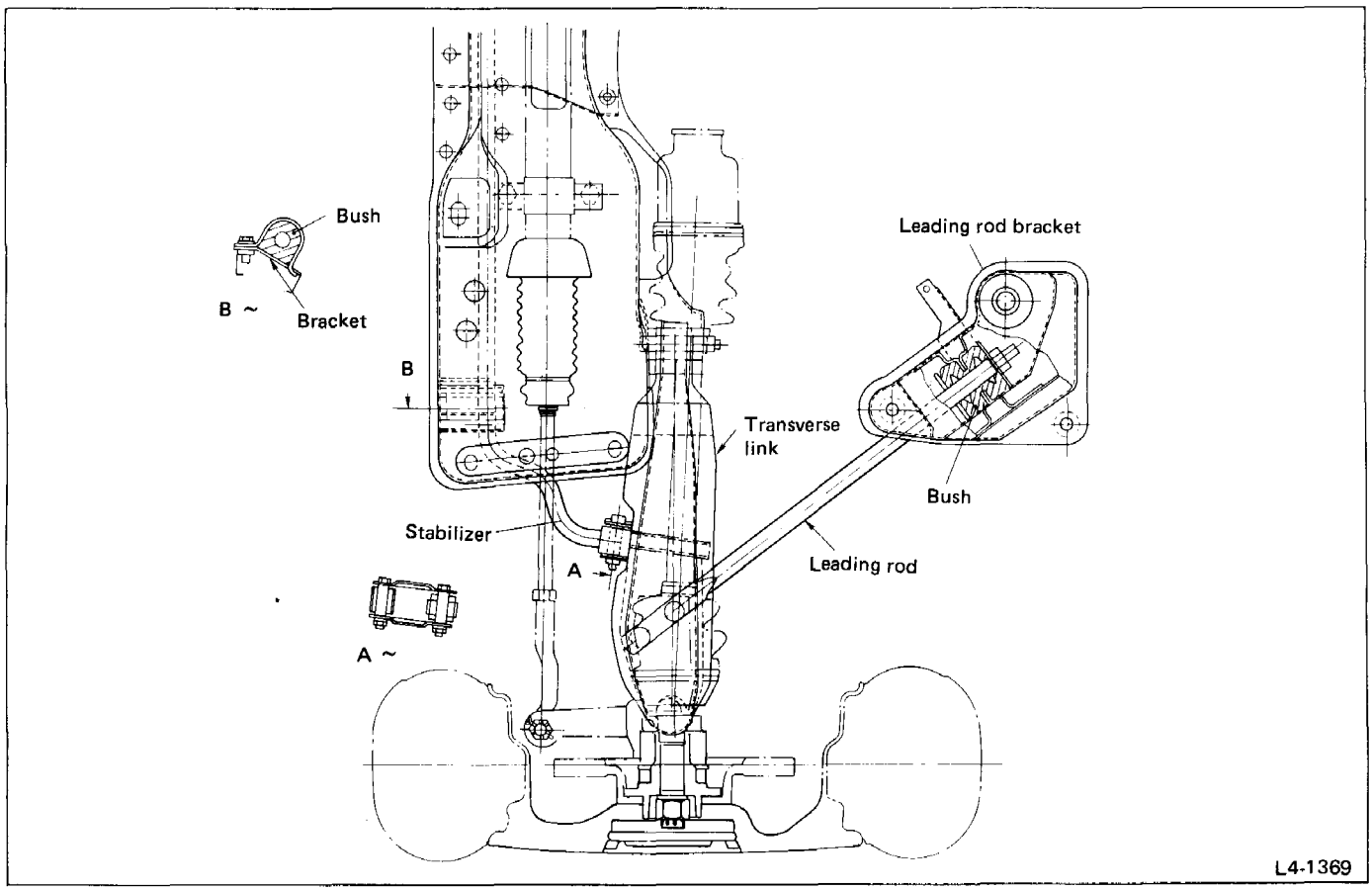

Fig. 47

REMOVAL

1) Jack up the front part of the vehicle.
2) Remove the plate bolt securing the stabilizer to the transverse link at the end of the stabilizer.
3) Remove the plate from the transverse link.
4) Remove the bolt securing the clamp (stabilizer bush) to the crossmember (front).
5) Remove the clamp and bush from the stabilizer.
6) Remove jack-up plate of crossmember (front), and remove the stabilizer.

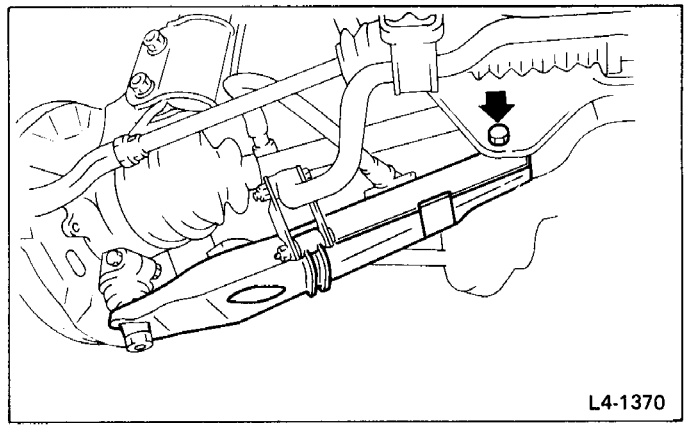

Fig. 48

INSTALLATION

To install, reverse the removal procedure.

a. Be sure the crossmember (front) side bush is brought up fully to the bent portion of the stabilizer.
b. Fit each bush securely, and tighten bolts with the tires placed on the ground when the vehicle is not loaded.
c. Tightening torque

Stabilizer to transverse link:
20 – 29 N·m (2.0 – 3.0 kg-m, 14 – 22 ft-lb)
Stabilizer clamp to crossmember (front):
21 – 28 N·m (2.1 – 2.9 kg-m, 15 – 21 ft-lb)

Front Crossmember

REMOVAL

1) Disconnect ground cable from battery.
2) Apply parking brake, and remove spare tire and wheel.
3) Loosen front wheel nuts.
4) Jack up vehicle, support it with safety stands (rigid racks), and remove front tires and wheels.
5) Release parking brake.
6) Remove air cleaner ASSY and pitching stopper rod.

Fit a cap onto carburetor to prevent inside of bore from becoming dusty.

7) Remove parking brake cable bracket from transverse link.
8) Remove cotter pin and castle nut on tie-rod end, and detach the ball stud from knuckle arm.
9) Remove front exhaust pipe.
10) Remove transverse link from front crossmember.
11) Remove nuts attaching engine mount cushion rubber to crossmember.
12) Remove self-lock nuts connecting steering torque rod and pinion shaft.
13) Lift engine ASSY by approx. 10 mm by using chain block.
14) Remove crossmember installing nuts with crossmember supported by jack, and remove crossmember downward gradually along with steering gearbox.

INSTALLATION

Installation is in the reverse order of removal procedures.

a. The clamping nuts for crossmember and transverse link bushing should be tightened with tires on the ground.
b. When removing crossmember downward, be careful that steering torque rod does not interfere with DOJ boot.
c. Tightening torque

Transverse link bushing to crossmember:
59 – 69 N·m (6.0 – 7.0 kg-m, 43 – 51 ft-lb)
Stabilizer to bush:
21 – 28 N·m (2.1 – 2.9 kg-m, 15 – 21 ft-lb)
Tie-rod end to housing:
25 – 29 N·m (2.5 – 3.0 kg-m, 18 – 22 ft-lb)
Front cushion rubber to crossmember:
20 – 32 N·m (2.0 – 3.3 kg-m, 14 – 24 ft-lb)
Torque rod ASSY to pinion shaft:
21 – 26 N·m (2.1 – 2.7 kg-m, 15 – 20 ft-lb)
Crossmember to body:
78 – 98 N·m (8.0 – 10.0 kg-m, 58 – 72 ft-lb)

Front Ball Joint

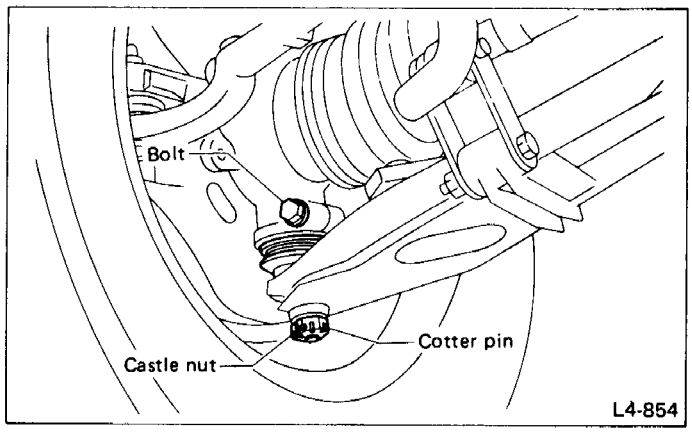

Fig. 49

REMOVAL

1) Jack up the front part of the vehicle, and remove the wheels.
2) Pull out the cotter pin from the ball stud, remove the castle nut, and remove the ball stud from the transverse link.
3) Remove the bolt securing the ball joint to the housing.
4) Remove the ball joint from the housing.

INSPECTION

1) Measure play δ of ball joint by the following procedures. Replace with a new one when the play exceeds the specified value.
   (1) With 686 N (70 kg, 154 lb) loaded in the direction shown in the figure, measure dimension ℓ_1.

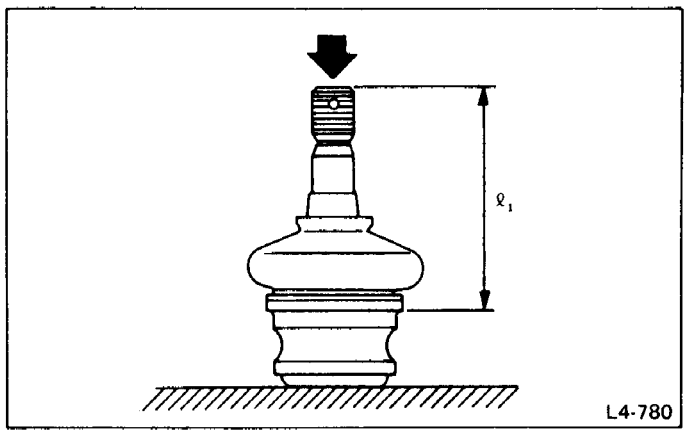

Fig. 50

   (2) With 686 N (70 kg, 154 lb) loaded in the direction shown in the figure, measure dimension ℓ_2.

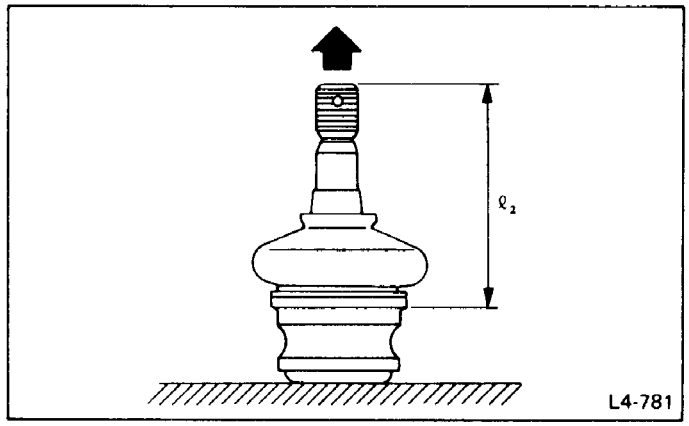

Fig. 51

   (3) Calculate play δ from the following formula.

$$\delta = \ell_2 - \ell_1$$

   (4) When play δ is larger than the following figure, replace with a new one.

FRONT BALL JOINT
Specified play for replacement: δ
More than 0.3 mm (0.012 in)

2) When play δ is smaller than the specified value, visually inspect the dust seal.
3) If the dust seal is damaged, remove it and wipe off any deteriorated grease with a clean cloth.
4) Next, replace with an appropriate quantity of specified grease (SUNLIGHT 2; P/N 003602010), about 3 g (0.11 oz), then mount a new dust seal.

INSTALLATION

1) Install ball joint onto housing.

Torque (Bolt):
38 – 50 N·m (3.9 – 5.1 kg-m, 28 – 37 ft-lb)

a. The ball joint and boot that have been removed must be checked for wear, damage or cracks, and any defective part must be replaced.
b. Do not apply grease to tapered portion of ball stud.

2) Connect ball joint to transverse link.

Torque (Castle nut):
39 N·m (4.0 kg-m, 29 ft-lb)

3) Retighten castle nut further within 60° until a slot in castle nut is aligned with the hole in ball stud end, then insert new cotter pin and bend it around castle nut.
4) Install front wheels, and lower vehicle.

Rear Suspension Assembly

REMOVAL

1) Remove the two bolts attaching shock absorber upper end to body.

At this time, vehicle should be in the unloaded condition.

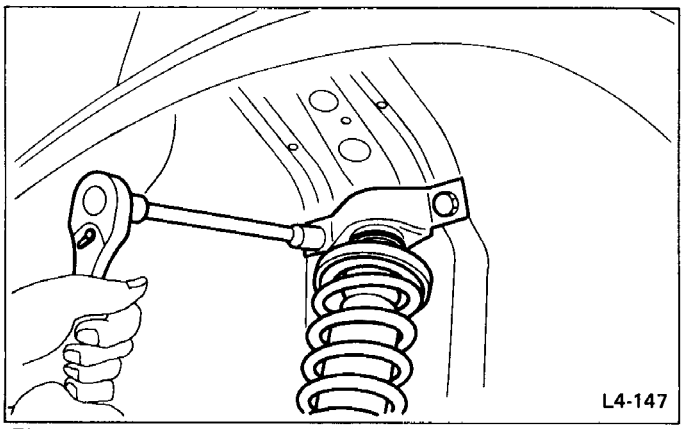

Fig. 52

2) Apply parking brake.
3) Loosen rear wheel nuts.
4) Jack up vehicle, support it with safety stands (rigid racks) and remove rear wheels.
5) (4WD only) Remove following parts and detach rear drive system.
   (1) Spring pins at both ends of drive shaft.

Using a steel bar of 6 mm (0.24 in) diameter, gradually drive out spring pins.

   (2) Rear axle shafts on both sides — Remove outer D.O.J. of drive shaft from spindle (inner arm side) by pushing inner D.O.J. of drive shaft fully toward rear differential and pushing inner arm downward. Then remove inner D.O.J. from differential spindle.
   (3) Proper shaft
   (Refer to chapter 3-4, "4WD System").
   (4) Support rear differential with jack.
   (5) Self-lock nuts connecting rear differential mounting member to body.
   (6) Rear differential — Remove 4 nuts installing rear differential at its front end to rear crossmember, and carefully dismount rear differential.
6) Remove a part of exhaust system parts so as not to interrupt the dismounting of the rear suspension ASSY. (Refer to chapter 2-9 "Exhaust System".)
7) Remove brake hose from brake pipe at inner arm side bracket (on both sides).

a. Insert air bleeder cap to brake hose end to prevent brake fluid from pouring.
b. Whenever removing or installing flare nut, use suitable flare nut wrench only.

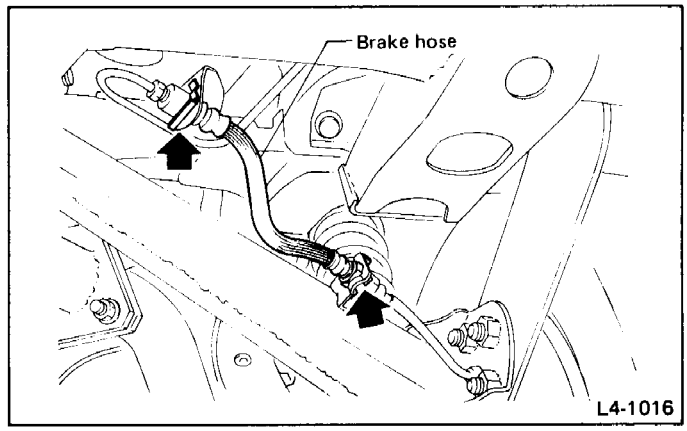

Fig. 53

8) Support rear crossmember at its center with a jack.

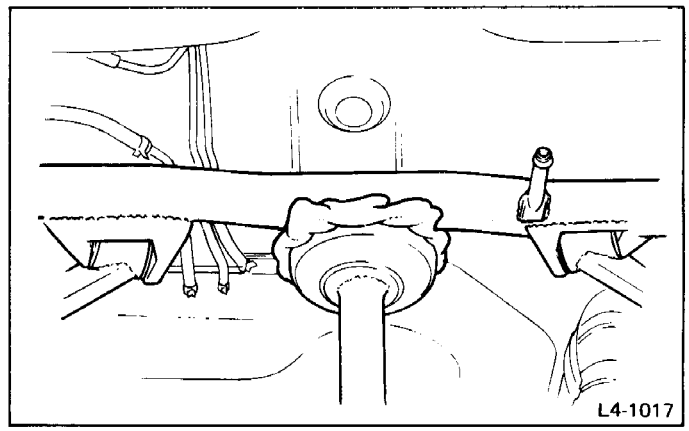

Fig. 54

9) Remove bolts holding rear crossmember at both ends.

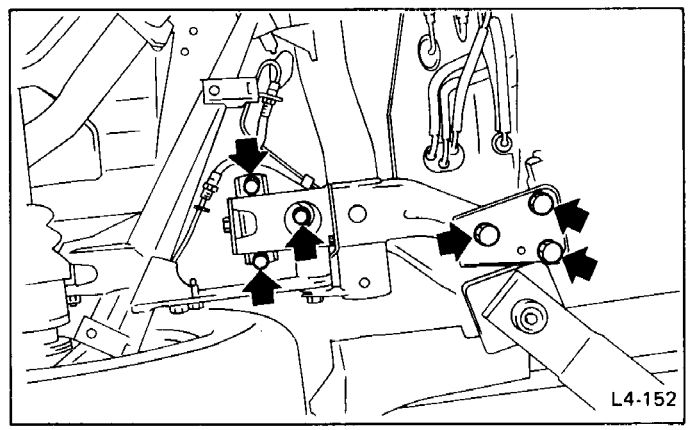

Fig. 55

10) Lower jack gradually and draw out from beneath vehicle body with rear suspension ASSY on it.

Put dismounted rear suspension ASSY on soft material (rag, corrugated paper, tire, etc.) to prevent brake backplate and/or brake drum from being damaged.

DISASSEMBLY

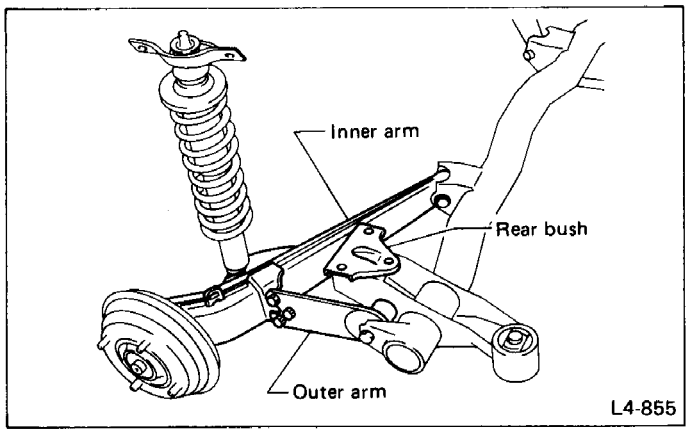

Fig. 56 FWD as example

1) Remove rear floating bush at both ends of rear crossmember.
2) Remove shock absorber from inner arm at lower end of shock absorber.
3) Stabilizer equipped vehicle only:
Remove stabilizer clamp bolts.
Remove stabilizer from inner arm.

Bushes on the removed stabilizer should be left as they are, in order to readily mate them with clamps in re-fitting the stabilizer.

4) Remove bolt connecting outer arm to crossmember, and also bolts connecting outer arm to inner arm.
5) Remove inner arm from crossmember.
   (1) Remove nut.
   (2) Pull out bolt from the crossmember bracket.

INSPECTION

Check the removed parts as follows, and if a fault is detected on any part, replace with a new one.
1) Check for wear, damage, deformation, or cracks.
2) Check the threads of bolts, nuts, and mating parts for deformation or damage.
3) Check the bottom part or oil seal portion of the shock absorber for oil leakage.
4) Be sure to replace the spring pin for the drive shaft with a new one when reassembling.

- How to check for damage and cracks
  If damage or cracks cannot be confirmed visually, check the following areas using the dye check method.
  (1) The areas where paint has been peeled off.
  (2) The areas where rust has formed.

ASSEMBLY

1) Install temporarily outer arm to crossmember.
2) Fit inner arm to crossmember and insert the connecting bolt, then tighten new nut temporarily.
3) Tighten bolts connecting the inner and outer arms temporarily.
4) Stabilizer equipped vehicle only:
Fit stabilizer to inner arm, and tighten stabilizer brackets with bolts.

Torque:
18 – 22 N·m (1.8 – 2.2 kg-m, 13 – 16 ft-lb)

5) Install shock absorber to inner arm at lower end of shock absorber temporarily.

INSTALLATION

To install, reverse the removal procedure.

a. Bolts for bush portions should be tightened with arms held in unloaded vehicle condition.
b. After installation, check and adjust the following:
(1) Air bleeding of brake system
(2) Rear wheel alignment
c. Tighten bolts and nuts to the specified torque.

Inner arm to outer arm:
127 – 147 N·m (13.0 – 15.0 kg-m, 94 – 108 ft-lb)
Inner arm to crossmember:
69 – 88 N·m (7.0 – 9.0 kg-m, 51 – 65 ft-lb)
Shock absorber to inner arm:
88 – 118 N·m (9.0 – 12.0 kg-m, 65 – 87 ft-lb)

Flare nut (Brake hose to brake pipe):
13 – 18 N·m (1.3 – 1.8 kg-m, 9 – 13 ft-lb)
Wheel nut:
78 – 98 N·m (8.0 – 10.0 kg-m, 58 – 72 ft-lb)
See "COMPONENT PARTS" for the tightening torque of the suspension parts.
Other parts except the above must be tightened with the torque value described in the associated chapter.

Rear Coil Spring

REMOVAL

1) Remove coil spring as a part of shock absorber ASSY coupled with shock absorber.
2) Mount COIL SPRING COMPRESSOR (926110000) to a vice.

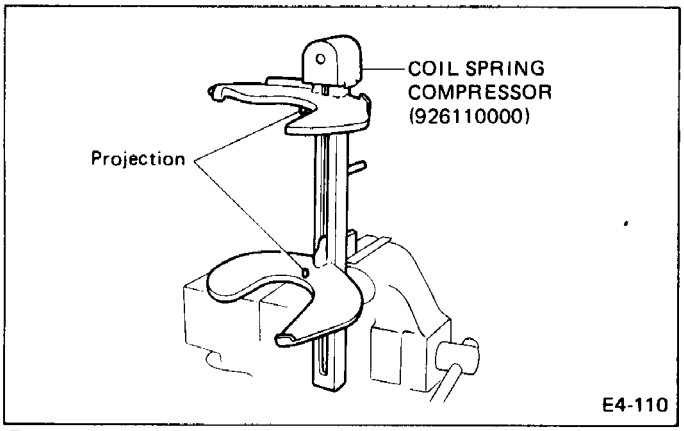

Fig. 57

3) Set shock absorber ASSY to COIL SPRING COMPRESSOR.

a. Be sure to use the special tool in order to avoid an accident.
b. Set the projections of COIL SPRING COMPRESSOR to the inner diameter side of coil spring.

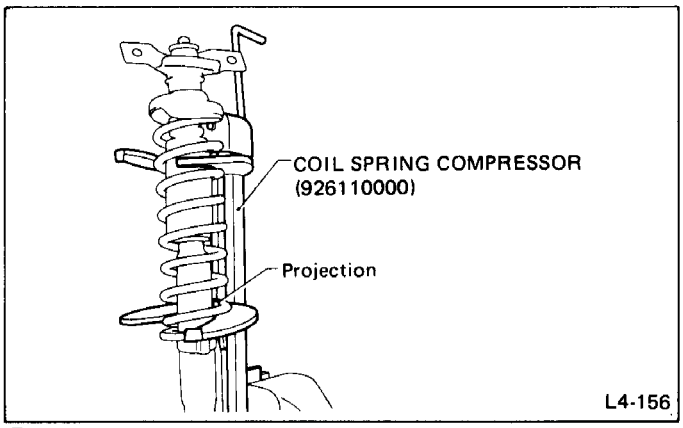

Fig. 58

4) Compress the coil spring by carefully turning the coil spring compressor handle.
(Compress the spring until it comes off the spring seat surface.)
5) Remove the rod connecting nuts (double nuts).
6) Extract the body fitting bracket, plate and upper spring seat as a whole from rod.
7) Return carefully the coil spring compressor handle to the original position, and take out the coil spring and shock absorber after making sure that the spring has been stretched fully.

Take out the coil spring, using care not to cause the spring to contact the shock absorber rod.

8) Extract helper ASSY from shock absorber CP.

INSPECTION

Shock absorber complete

1) Check for oil leakage from bottom of damper and oil seal. If oil leaks from damper bottom, replace. If oil leakage from oil seal reaches spring seat, replace. Oil stains around oil seal are permissible, therefore replacement is unnecessary.
2) Ascertain recovery of the shock absorber rod by pushing it into the base. If the recovery is unusually slow or has hitches, replace with a new one.
3) Check the lower bush for deformation or loss and replace if defective.
4) Check the shock absorber itself, spring seat portion and rod end bolt portion for damage or deformation.

Coil spring

Check for breakage or unusual rust.

Helper assembly

Check dust cover and helper for deformation or abnormal wear (holes).

Parts fitted to the upper portion

Check for deformation or damage.

INSTALLATION

To install, reverse the removal procedure.

a. Make sure that the coil spring is mounted with the flat end downward.

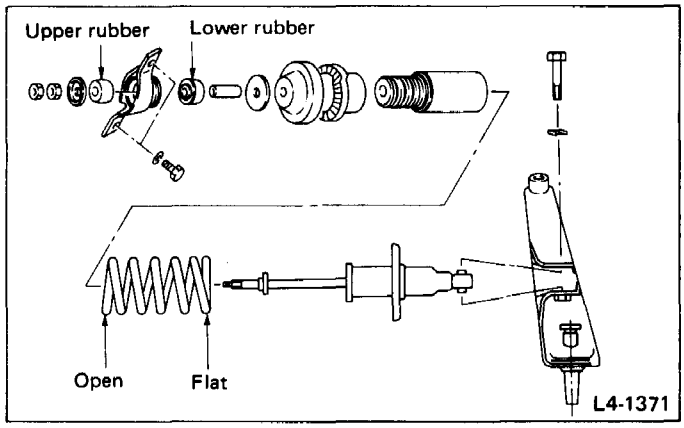

Fig. 59

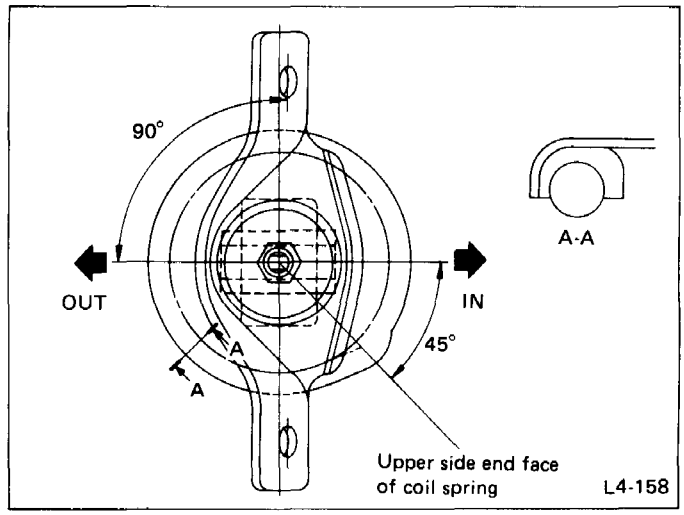

Fig. 60

b. Take care of the vertical installing direction of upper and lower rubbers.

c. Take care of the installing direction of bracket CP.

d. Be careful that rubber seat does not extrude from spring seat (above figure).

e. Set coil spring correctly so that its end face fits well into upper spring seat as shown in above figure.

Troubleshooting

1) Improper vehicle posture or improper ground clearance

Possible causes	Countermeasures
(1) Permanent distortion or breakage of coil spring	Replace.
(2) Unsmooth operation of shock absorber	Replace.
(3) Installation of wrong inner arm	Replace with proper parts.
(4) Deformation of inner arm	Replace.

2) Poor ride comfort

1) Large rebound shock.
2) Rocking of vehicle continues too long after running over bump and/or hump.
3) Large shock in bumping.

Possible causes	Countermeasures
(1) Breakage of coil spring	Replace.
(2) Overinflation pressure of tire	Adjust.
(3) Improper ground clearance	Adjust or replace coil springs with new ones.
(4) Fault in operation of shock absorber	Replace.
(5) Damage or deformation of shock absorber lower end bushing	Replace.
(6) Unsuitability of maximum and/or minimum length of shock absorber	Replace with proper parts.
(7) Deformation or loss of bushing	Replace.
(8) Deformation or damage of helper ASSY	Replace.

3) Noise

Possible causes	Countermeasures
(1) Wear or damage of shock absorber component parts	Replace.
(2) Damage or deformation of shock absorber lower end bushing	Replace.
(3) Loosening of outer arm installing bolt	Retighten to the specified torque.
(4) Deformation or loss of bushing	Replace.
(5) Loosening of inner arm installing bolt to crossmember bracket	Retighten to the specified torque.
(6) Unsuitability of maximum and/or minimum length of shock absorber	Replace with proper parts.
(7) Breakage of coil spring	Replace.
(8) Loosening of each bolt and/or nut	Retighten to the specified torque.

SERVICE PROCEDURE FOR AIR (PNEUMATIC) SUSPENSION

In this section are described the different points of the air (pneumatic) suspension from the explanations described in the section of conventional suspension. Accordingly, use this section together with the section of conventional suspension.

General Precautions

1) Be sure to support the vehicle with a jack before getting under it for servicing. To check any system, other than electrical, under the vehicle, disconnect cables from battery in advance. This prevents the auto leveler from being activated to take up increase or decrease in wheel reaction while the ignition switch is ON.
2) When reassembling, do not reuse O-rings. Also be sure not to damage O-ring and O-ring contact surfaces such as O-ring groove. Apply grease to O-rings when reassembling.

Recommended grease and O-ring:
Grease NOK SEALUB S-4
O-ring NOK Material A980

3) Do not apply an undercoating for local rust prevention to the air bags (rolling diaphragm surface and cylinder surface with which the diaphragm is in rolling contact) and the air compressor.
This is because, when the damper oil temperature increases due to running on rough roads, the generated heat melts the undercoating, which makes it easier to trap dust, dirt, and sand on the surface, resulting in damaged diaphragm. The undercoating on the air inlet of the compressor can also block the vent.
4) When welding vehicle body, be sure to cover air pipe and air spring diaphragm so that welding sputter will not attach to these parts.
5) When replenishing battery electrolyte, be careful not to have electrolyte come in contact with air pipe.
6) At transportation, retighten the ratchet another 2-3 notches with tie-down wire tightened up. (Retightening of one notch is recommended for the all models of conventional coil springs.)
The tighter tension is recommended because of its lower spring constant as compared with that of the coil spring.

Front Air Suspension Assembly

REMOVAL

Tightening torque: N·m (kg-m, ft-lb)
T: 5 – 15 (0.5 – 1.5, 3.6 – 10.8)

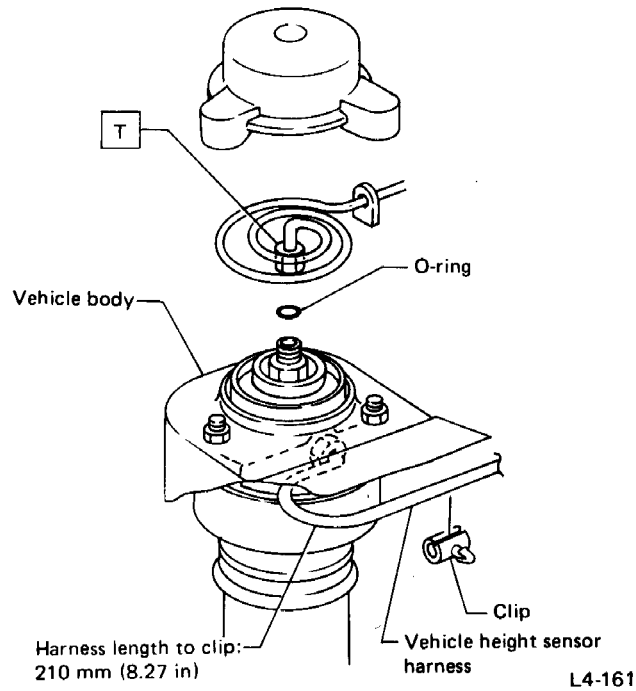

Fig. 61

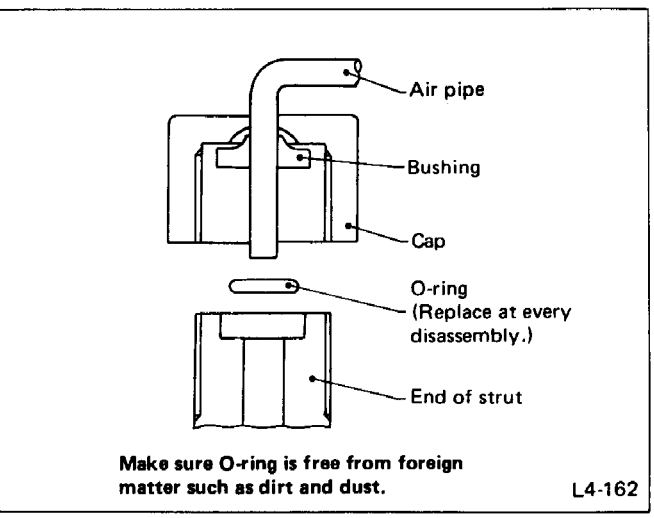

Fig. 62

1) Disconnect air pipe.
2) Remove mud guard.
3) Remove vehicle height sensor harness from clip.
4) Disconnect harness coupler.

Other procedures are the same as those used for removal of standard type strut ASSY.

DISASSEMBLY

Strut mount can be removed from air suspension CP, using SPANNER (926510000).

Disassembling air suspension CP is not allowed.

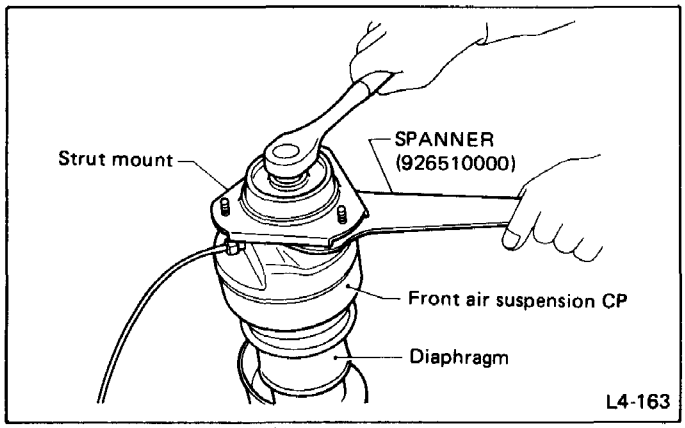

Fig. 63

a. Before removing strut mount, make sure that air has been discharged from air spring.
b. Be careful not to damage diaphragm.

ASSEMBLY AND INSTALLATION

1) Using SPANNER (926510000), install strut mount to front air suspension CP.

Tightening torque:
51 – 67 N·m (5.2 – 6.8 kg-m, 38 – 49 ft-lb)

2) Install front air suspension ASSY to vehicle body. Refer to reassembly procedure of a standard type strut ASSY.
3) Secure vehicle height sensor harness with clip.

Clip sensor harness 210 mm (8.27 in) from front air suspension ASSY to avoid twisting.

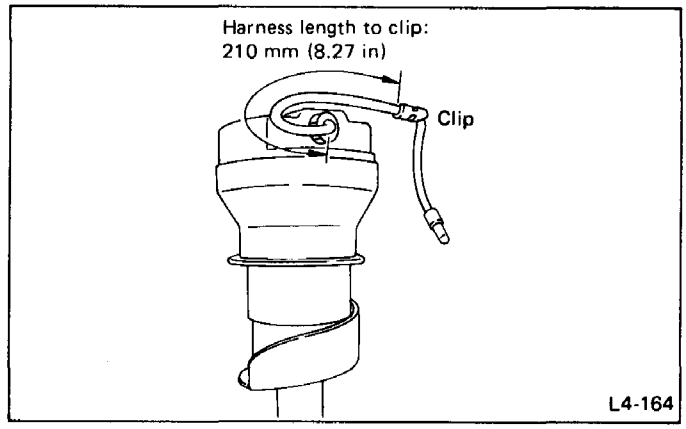

Fig. 64

4) Fit O-ring to the end of strut rod, then insert air pipe into O-ring for connection.

a. Insertion length of air pipe (L): 13 mm (0.51 in) or more.

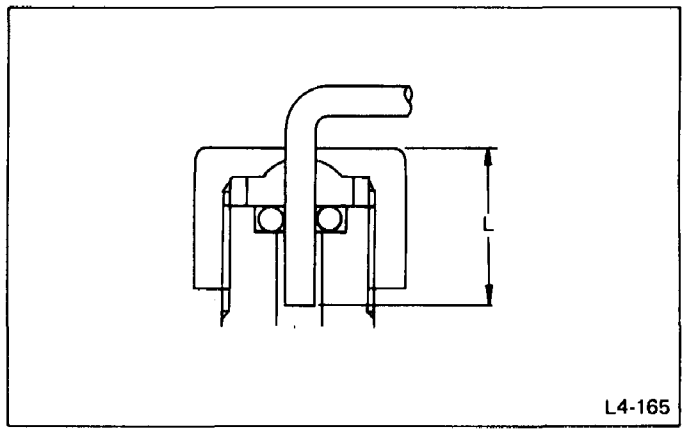

Fig. 65

b. Before inserting air pipe, make sure O-ring is free from any foreign matter such as dirt and dust, and apply a thin coat of grease to O-ring.
(Discard old O-ring when disassembling.)
c. Install air pipe in correct direction.
(Correct position in straight ahead position of vehicle is shown below.)

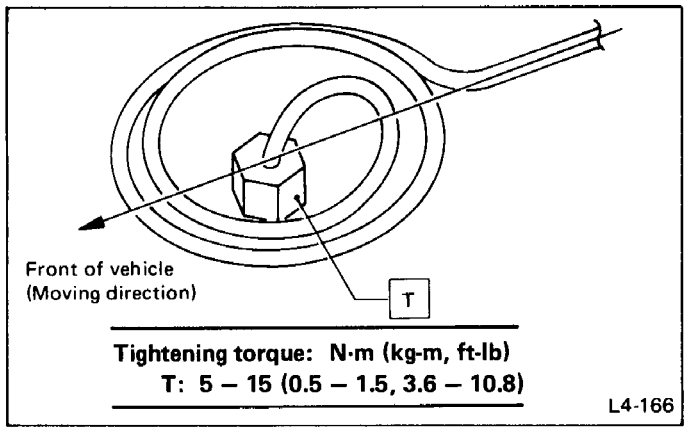

Fig. 66

To disconnect, pull off air pipe while opening claw of collet by using AIR PIPE REMOVER (926520000).

4) Pull out vehicle height sensor harness from access hole of body, and disconnect harness coupler.

Other procedures are the same as those used for removal of a standard type damper.

Be extremely careful not to damage diaphragm.

DISASSEMBLY

a. Before disassembling rear air suspension ASSY, be sure to discharge air from air spring.

b. Disassembling air suspension CP is not allowed.

Rear Air Suspension Assembly

REMOVAL

1) Remove rear apron protector.

2) Remove rear solenoid valve from rear air suspension ASSY.

3) When replacing solenoid valve, disconnect air pipe from solenoid valve.

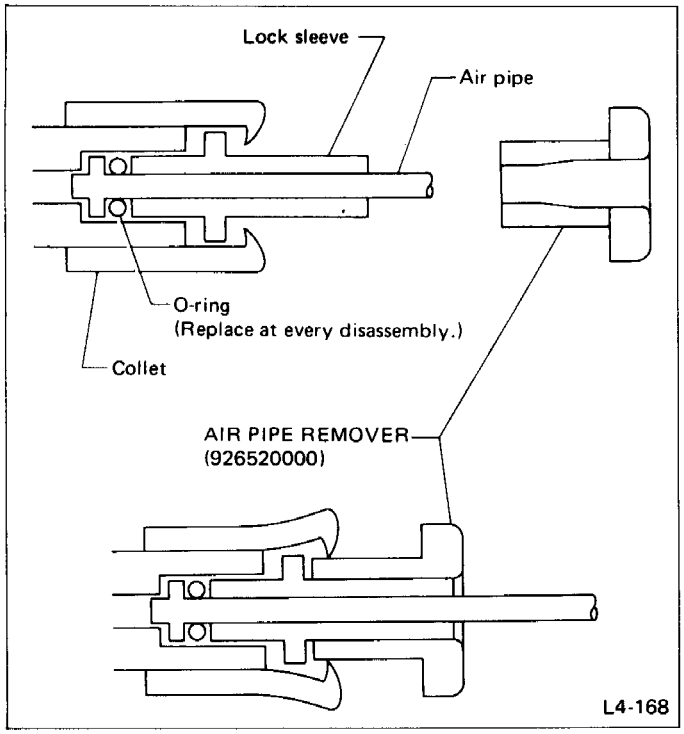

Fig. 67

ASSEMBLY AND INSTALLATION

Reverse the removing and disassembling procedures. Observe the following:

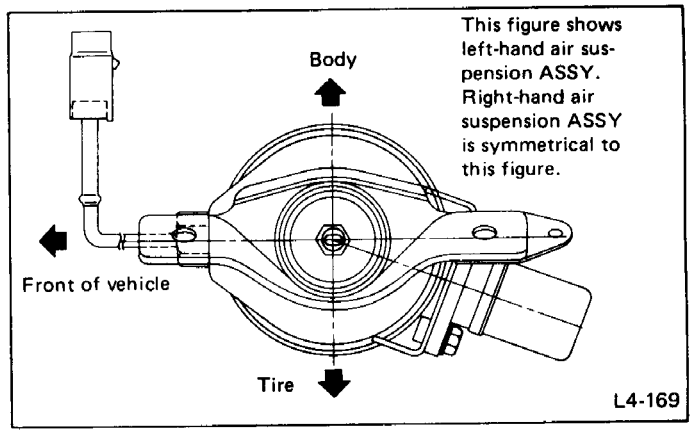

Fig. 68

a. Be sure to install upper rubber and lower rubber to their proper directions.

b. Be sure to install bracket CP in correct direction.

c. Be careful not to damage or scratch O-ring and O-ring contacting surface. Make sure O-ring is free from any foreign matter, and coat with grease when assembling.
(Discard old O-rings when disassembling.)

d. Arrange vehicle height sensor harness, solenoid valve lead wire, and air pipe as shown in the Figure.

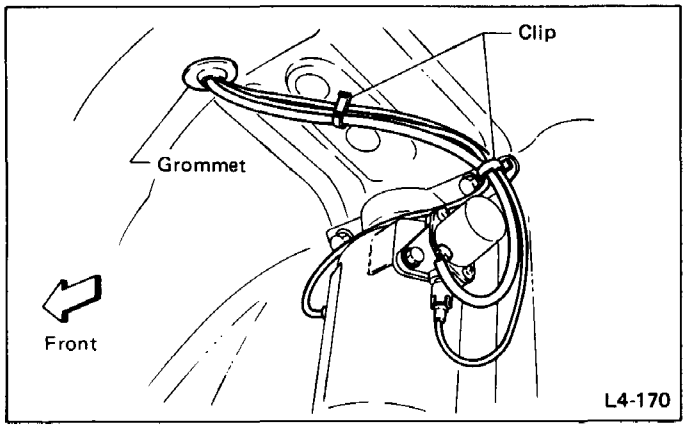

Fig. 69

Compressor & Drier Assembly

REMOVAL

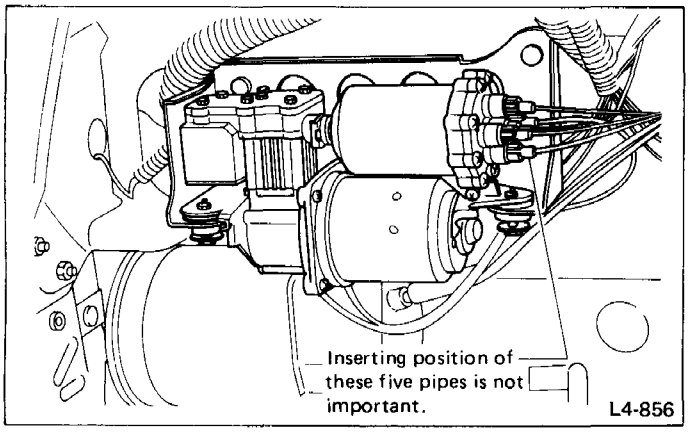

Fig. 70

1) Remove front left wheel.
2) Remove front half portion of mud guard.
3) Using AIR PIPE REMOVER (926520000), disconnect five air pipes from drier.
4) Remove coupler.
5) Remove compressor & drier ASSY from engine compartment by loosening four nuts.

DISASSEMBLY

Disassemble compressor & drier ASSY to compressor, drier, and bracket by removing bolts, etc.

a. Disassembly of both compressor and drier is not allowed. If trouble should occur, replace faulty unit as an ASSY.
b. Make sure that O-rings are free from foreign matter such as dirt and dust, and coat with grease before reassembling.

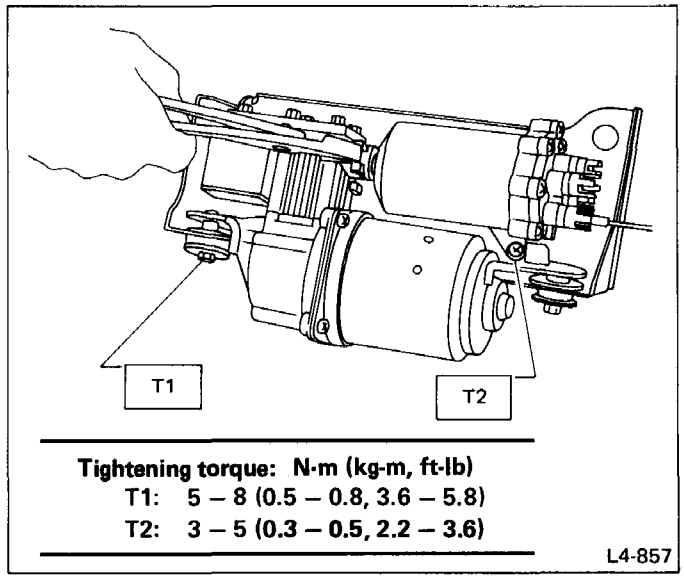

Fig. 71

ASSEMBLY AND INSTALLATION

Reverse the sequence of removal and disassembly procedures. Observe the following:

Make sure that O-rings are free from foreign matter such as dirt and dust, and coat with grease before reassembling.

Air Tank Assembly

REMOVAL

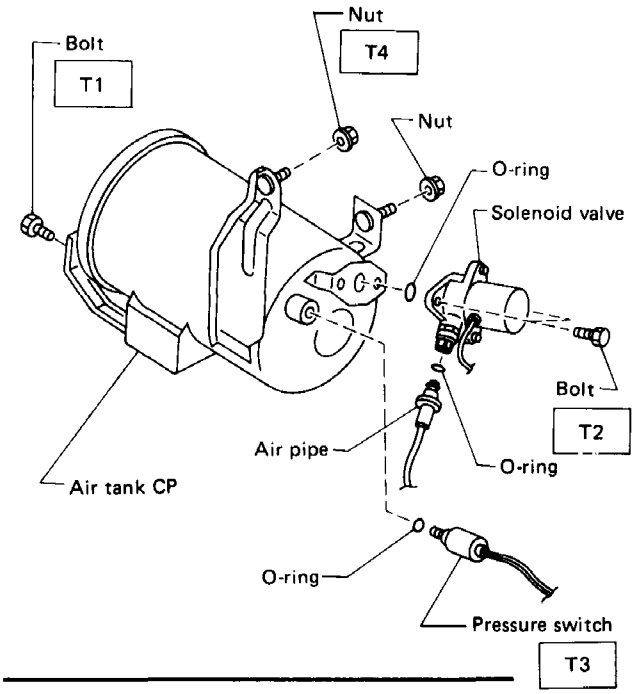

Tightening torque: N·m (kg-m, ft-lb)
T1: 13 – 23 (1.3 – 2.3, 9 – 17)
T2: 5.4 – 9.3 (0.55 – 0.95, 4.0 – 6.9)
T3: 11 – 13 (1.1 – 1.3, 8 – 9)
T4: 10 – 18 (1.0 – 1.8, 7 – 13)

L4-173

Fig. 72

1) Using AIR PIPE REMOVER (926520000), remove air pipe from solenoid valve, then remove solenoid valve coupler.
2) Remove left-hand turn signal light from front bumper.
3) Remove air tank ASSY by loosening one bolt and two nuts.

DISASSEMBLY

a. When removing pressure switch or solenoid valve from air tank, discharge air from the tank gradually. Be extremely careful because air tank contains highly pressurized air.
b. When replacing pressure switch or solenoid valve, removal of air tank from vehicle body is unnecessary.

ASSEMBLY AND INSTALLATION

Reverse the sequence of removal and disassembly procedures. Observe the following:

a. When installing O-ring, make sure it is free from any foreign matter such as dirt and dust, and then coat with grease. Be careful not to damage O-ring.
b. When installing pressure switch, be sure to apply grease to its thread portion and tighten it to the specified tightening torque.

TROUBLESHOOTING

Symptom		Trouble		Cause		Ref.
Car height increases.	Ignition switch OFF	Front or rear of car rises if car is left as it is.		Improper sealing of affected air suspension solenoid valve or tank solenoid valve		A7
	Ignition switch ON	Front or rear of car rises abnormally.		Faulty vehicle height sensor		B1
				Faulty control unit		
				Broken solenoid valve coil/air discharge solenoid valve coil of affected air suspension		
				Faulty electrical circuit		
				Sticking solenoid valve/air discharge solenoid valve of affected air suspension		A10, A14
				Clogged air line		A9
Car height decreases.	Ignition switch OFF	Front of car height decreases when car is left as it is.		Air leakage from air pipe or joint on top of strut mount		A1
				Air leakage from front solenoid valve		A7
				Air leakage from front air suspension ASSY		A4
		Rear of car height decreases when car is left as it is.		Air leakage from rear solenoid valve or faulty seal		A7
				Air leakage from rear air suspension ASSY		A4
	Ignition switch ON	Front or rear of car is abnormally low.	Compressor does not operate.			B3
			Compressor operates.	Car returns to the NORMAL position when left unattended with ignition switch ON for 5 minutes.	Air leakage from tank ASSY	A5
					Air leakage from air line	A2
				Car returns to the NORMAL position when left unattended with ignition switch ON for 5 minutes.	Faulty vehicle height sensor	B1
					Faulty control unit	
					Broken solenoid valve coil	
					Faulty electrical circuit	
					Sticking solenoid valve	A10
					Clogged air line	A9
					Air leakage from air line	A2

Symptom	Trouble	Cause		Ref.
Compressor malfunctions.	Compressor keeps on running. (When engine is in operation, compressor keeps running over 8 minutes if left alone without getting in and out of vehicle.)	Vehicle height lowers if left alone with ignition switch off for over 15 minutes.		See "Car height decreases."
		Vehicle height does not lower even if left alone with ignition switch off for over 15 minutes.	Faulty pressure switch	B2
			Faulty control unit	
			Defective compressor relay	
			Defective electric circuit	
			Faulty compressor	
			Tank solenoid valve broken or sticking	A10
			Air leaks from tank ASSY	A5
			Air line leaks air or clogs	A2, A9
	Compressor operates frequently. (When engine is in operation, compressor operates frequently if left alone without getting in and out of vehicle for over 5 minutes.)	When ignition switch is off, vehicle height lowers if left alone for over 15 minutes.		See "Car height decreases."
		When ignition switch is off, vehicle height does not lower even if left alone for over 15 minutes.	Faulty pressure switch	B2
			Faulty control unit	
			Defective electric circuit	
			Air leakage from tank ASSY	A5
	Compressor will not operate. (If compressor operates frequently and its temperature rises, circuit breaker will operate to stop compressor; if left as it is for some time and its temperature drops, it will restart.)	Compressor malfunctioning		B3
		Faulty pressure switch		
		Faulty control unit		
		Defective electric circuit		

Symptom	Trouble	Cause	Ref.
WARNING light blinks. (Warning of system failure.)	WARNING light blinks when ignition switch is turned on.	Vehicle height sensor malfunctioning	B4
		Faulty control unit	
		Defective vehicle height sensor	
	WARNING light blinks after more than 10 minutes passed with ignition switch turned on.	Compressor malfunctioning	B5
		Faulty solenoid valve	
		Faulty control unit	
		Air leaks from tank ASSY	A5
		Air line leaks air or clogs	A2, A9

B1)

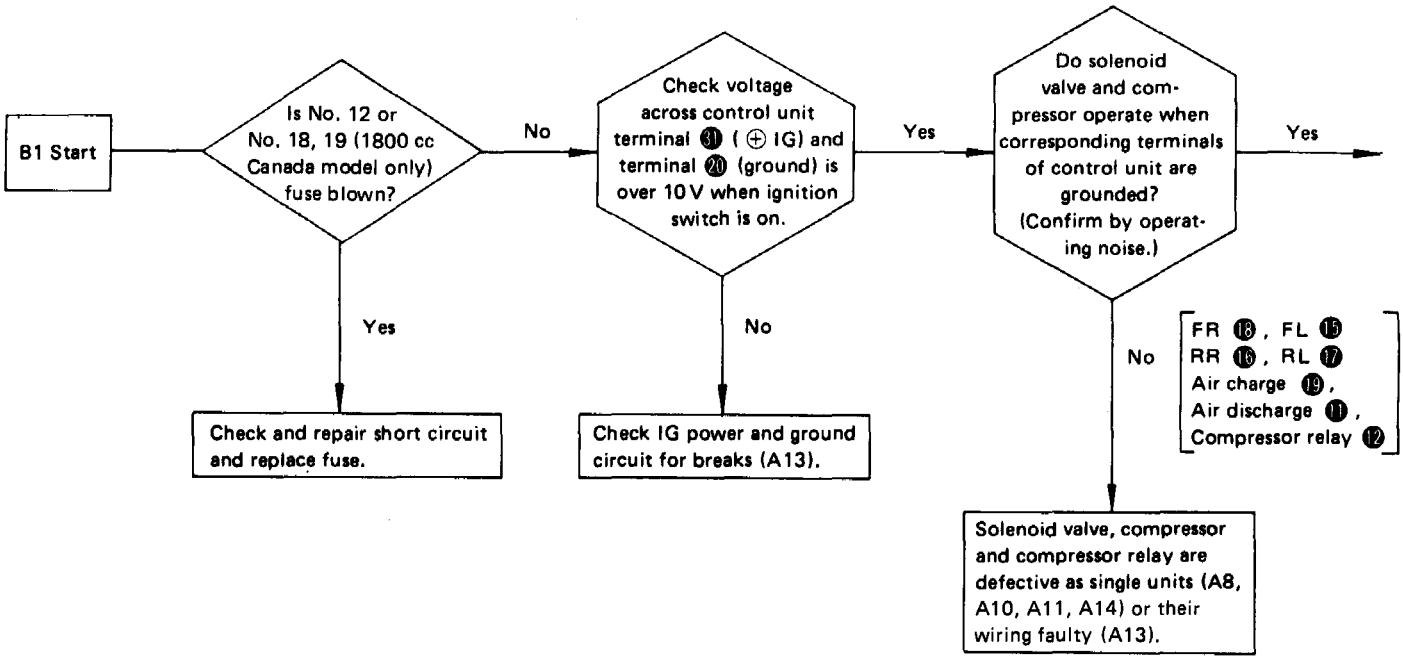
B1 Start
Is No. 12 or No. 18, 19 (1800 cc Canada model only) fuse blown?
No
Check voltage across control unit terminal ㉑ (⊕ IG) and terminal ⑳ (ground) is over 10 V when ignition switch is on.
Yes
Do solenoid valve and compressor operate when corresponding terminals of control unit are grounded? (Confirm by operating noise.)
Yes
Yes
Check and repair short circuit and replace fuse.
No
Check IG power and ground circuit for breaks (A13).
No
FR ⑱, FL ⑮
RR ⑯, RL ⑰
Air charge ⑲,
Air discharge ⑪,
Compressor relay ⑫
Solenoid valve, compressor and compressor relay are defective as single units (A8, A10, A11, A14) or their wiring faulty (A13).

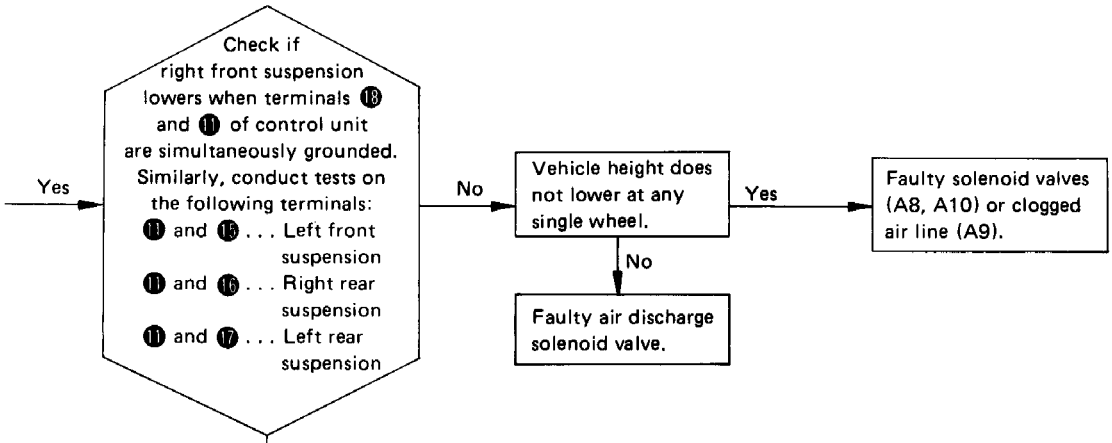

Yes

Remove No. 18, 19 (1800 cc Canada model only) fuse and turn ignition switch ON.

Measure voltage across control unit terminals (in combination) corresponding to the suspension to be tested while raising the car with a jack.

- Measurement method (for the right front suspension)
  (1) Check that voltage across terminals ㉗ and ⑳ –GND is approximately 5 volts.
  (2) Check that voltage across terminals ㉟ and ⑳ is approximately 0 volts.
  (3) Slowly raise the car with a jack until voltage across terminals ㉟ and ⑳ changes from 0 to 5 volts.
  (4) Check that voltage across terminals ㉗ and ⑳ is approximately 5 volts.
  (5) Slowly raise the car with a jack until voltage across terminals ㉗ and ⑳ changes from 5 to 0 volts.
  (6) Check that voltage across terminals ㉟ and ⑳ is approximately 5 volts.
  Each strut must also be checked in a similar manner.

(Unit: Approx. volts)

Terminal combination	Right front suspension		Left front suspension		Right rear suspension		Left rear suspension	
	㉟↔⑳	㉗↔⑳	㉞↔⑳	㉖↔⑳	㉓↔⑳	㉕↔⑳	㉘↔⑳	㉛↔⑳
L (LOW)	0	5	0	5	0	5	0	5
Set height	5	5	5	5	5	5	5	5
H (HIGH)	5	0	5	0	5	0	5	0

Check that all test results are satisfactory as indicated in Table at right.

No

Check vehicle height sensor.

No

Replace affected strut.

Stroke the appropriate front or rear air suspension ASSY and check continuity between terminals of coupler at end of height control sensor harness protruding from the air suspension ASSY. If test results are as shown below, there are no problems.

O.K.

Replace control unit.

Yes
(Electrical system is O.K.)

Check air lines (A2, A10), pressure switch (A3) and air tank ASSY (A5).

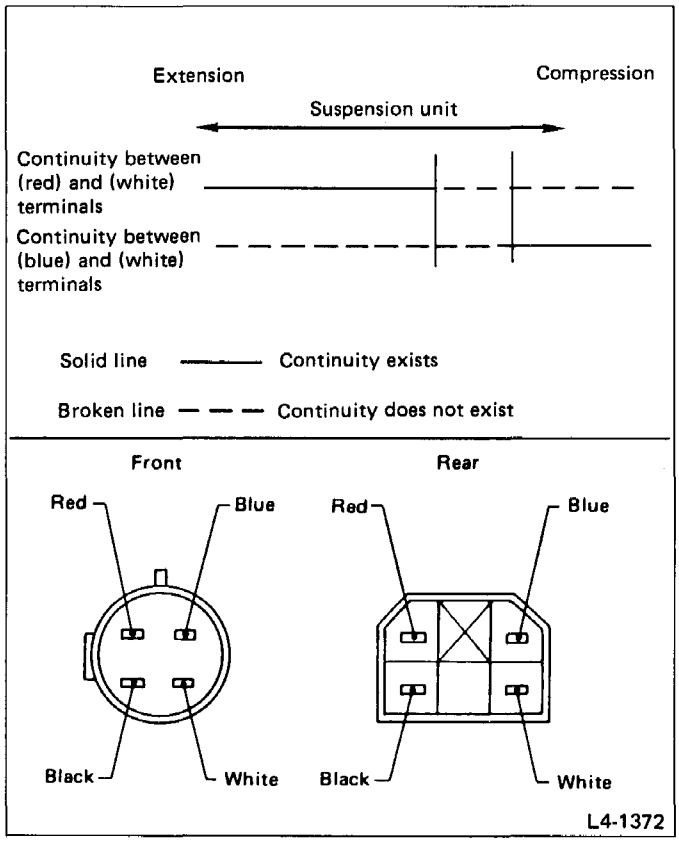
Extension
Compression
Suspension unit
Continuity between (red) and (white) terminals
Continuity between (blue) and (white) terminals
Solid line ——— Continuity exists
Broken line — — — Continuity does not exist
Front
Rear
Red
Blue
Black
White
Red
Blue
Black
White
L4-1372

Fig. 73

B2)

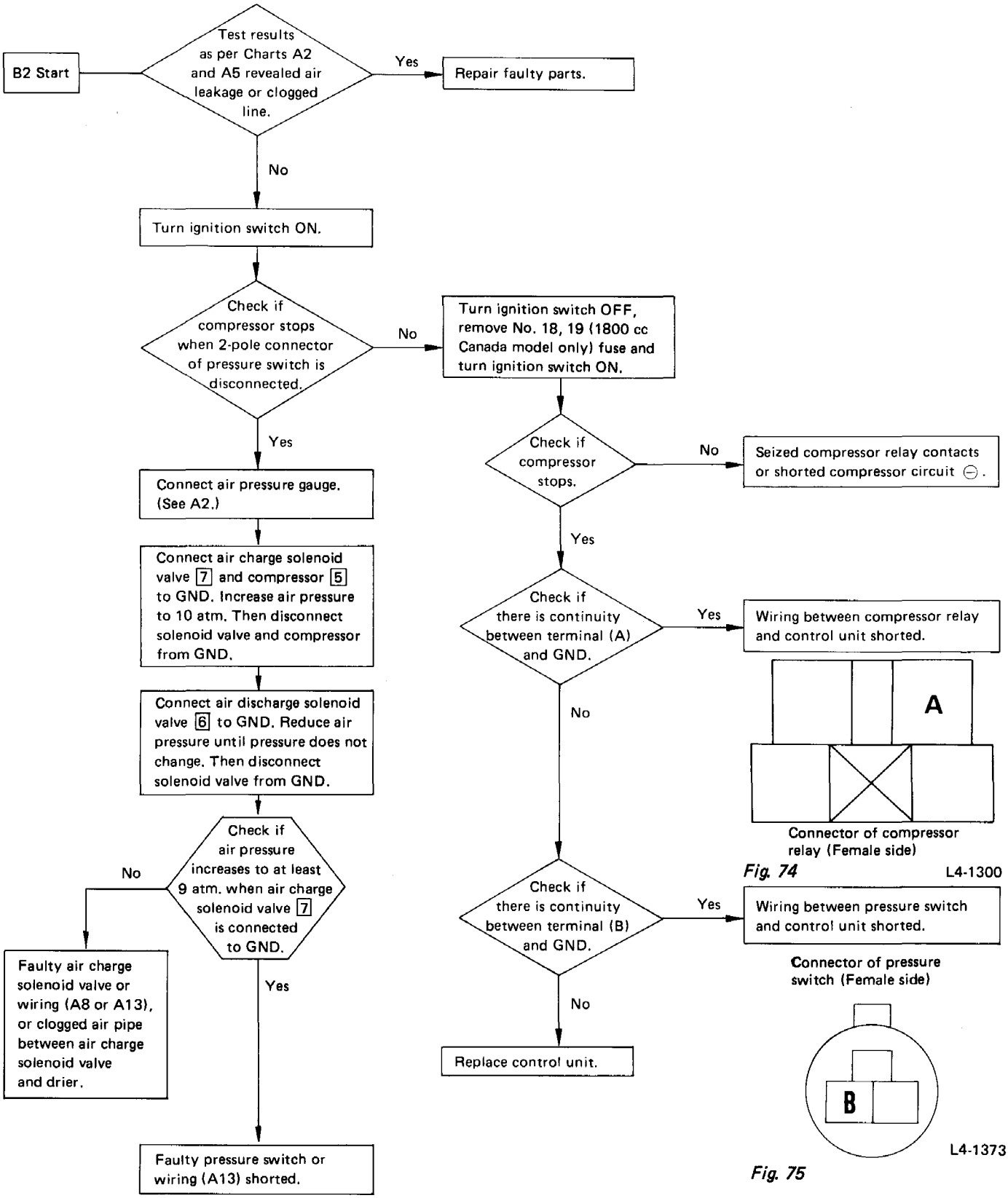

Connector of compressor relay (Female side)

Fig. 74 L4-1300

Connector of pressure switch (Female side)

L4-1373

Fig. 75

B3)

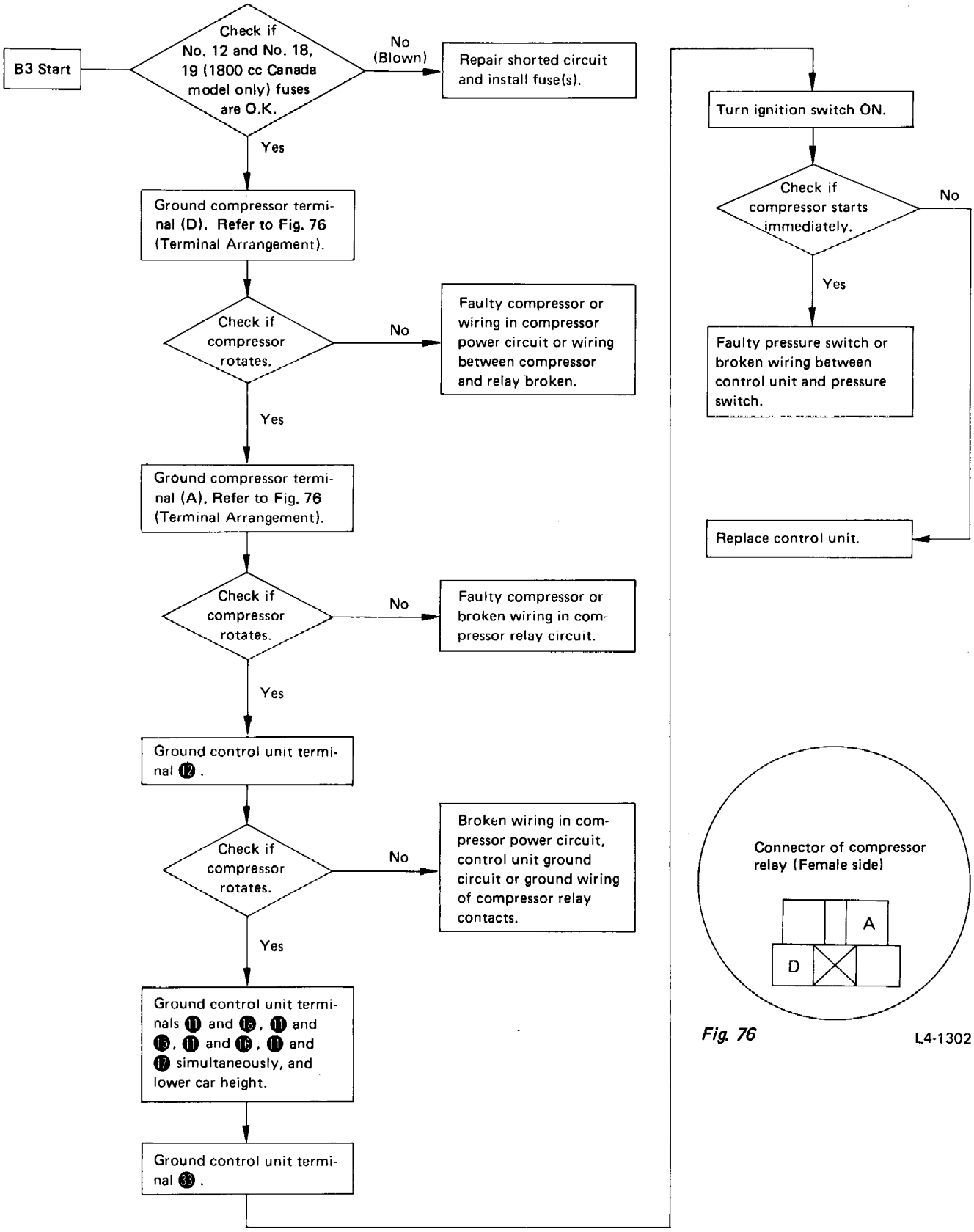

Fig. 76 L4-1302

B4)

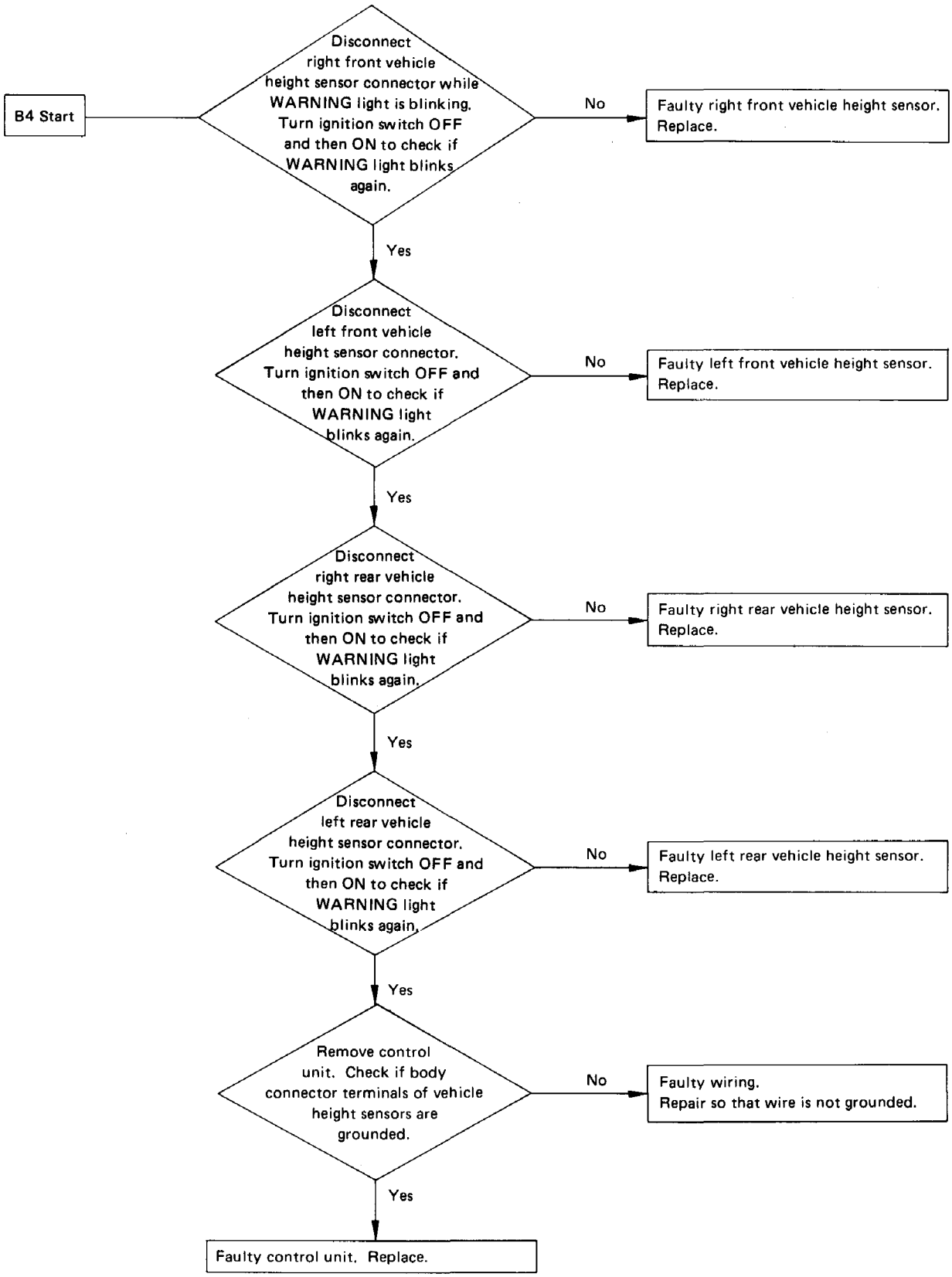
B4 Start
Disconnect right front vehicle height sensor connector while WARNING light is blinking. Turn ignition switch OFF and then ON to check if WARNING light blinks again.
No
Faulty right front vehicle height sensor. Replace.
Yes
Disconnect left front vehicle height sensor connector. Turn ignition switch OFF and then ON to check if WARNING light blinks again.
No
Faulty left front vehicle height sensor. Replace.
Yes
Disconnect right rear vehicle height sensor connector. Turn ignition switch OFF and then ON to check if WARNING light blinks again.
No
Faulty right rear vehicle height sensor. Replace.
Yes
Disconnect left rear vehicle height sensor connector. Turn ignition switch OFF and then ON to check if WARNING light blinks again.
No
Faulty left rear vehicle height sensor. Replace.
Yes
Remove control unit. Check if body connector terminals of vehicle height sensors are grounded.
No
Faulty wiring. Repair so that wire is not grounded.
Yes
Faulty control unit. Replace.

B5)

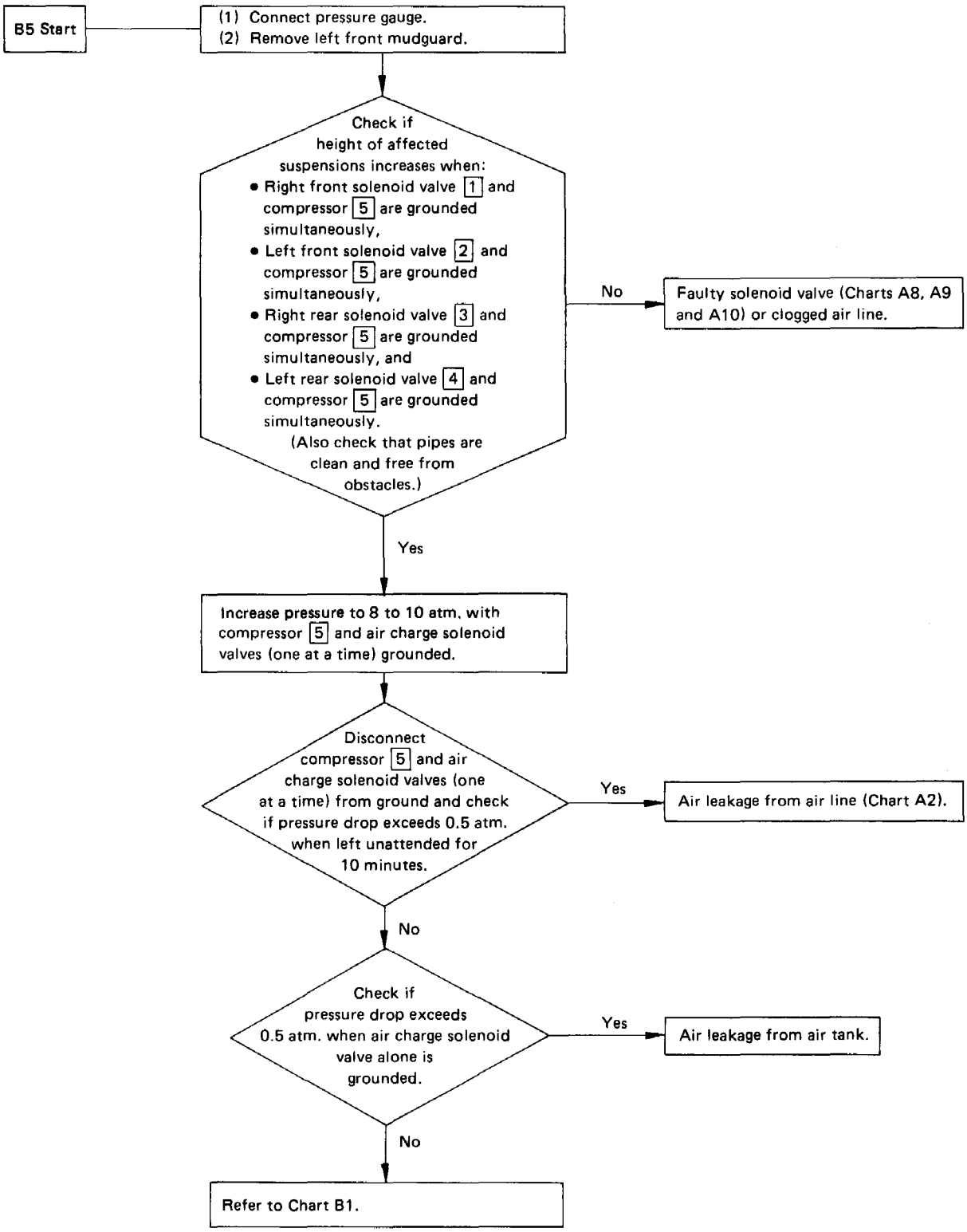
B5 Start
(1) Connect pressure gauge.
(2) Remove left front mudguard.
Check if height of affected suspensions increases when:
• Right front solenoid valve [1] and compressor [5] are grounded simultaneously,
• Left front solenoid valve [2] and compressor [5] are grounded simultaneously,
• Right rear solenoid valve [3] and compressor [5] are grounded simultaneously, and
• Left rear solenoid valve [4] and compressor [5] are grounded simultaneously.
(Also check that pipes are clean and free from obstacles.)
No
Faulty solenoid valve (Charts A8, A9 and A10) or clogged air line.
Yes
Increase pressure to 8 to 10 atm. with compressor [5] and air charge solenoid valves (one at a time) grounded.
Disconnect compressor [5] and air charge solenoid valves (one at a time) from ground and check if pressure drop exceeds 0.5 atm. when left unattended for 10 minutes.
Yes
Air leakage from air line (Chart A2).
No
Check if pressure drop exceeds 0.5 atm. when air charge solenoid valve alone is grounded.
Yes
Air leakage from air tank.
No
Refer to Chart B1.

INSPECTION

A1) Air leaks from air pipe above strut mount

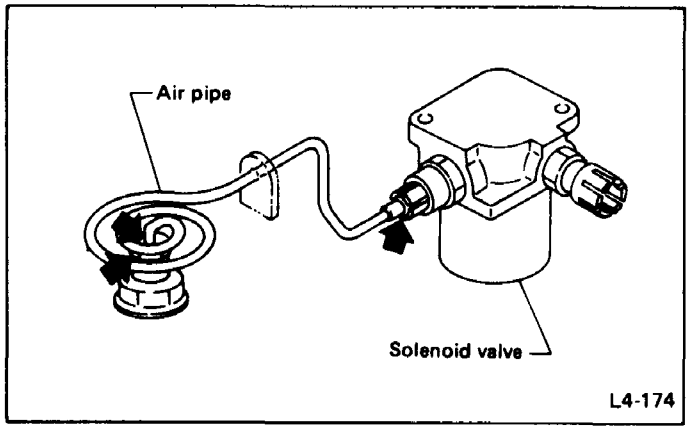

Fig. 77

Check air pipe and joints (shown by arrow) for air leaks. Soap water or SUBARU CRC (004301003) may be used, but no soap water must be applied to ball bearing inside the strut mount.

A2) Air leakage from air line

The following special service tools are available:

- 3-WAY JOINT ASSY (926940000) consists of:
  (1) 3-WAY JOINT 1
  (2) AIR PIPE . . . . . 2 (3 sets)

Use a commercial gauge manifold.

1) Connect a pressure gauge to the right front solenoid valve (for example). See Fig. 79.
2) Remove the left front mudguard.
3) Ground the air charge solenoid valve and increase solenoid valve pressure to 5 to 6 atm.
4) Leave the solenoid valve unattended for 10 minutes. Then check for a pressure drop. If the pressure drop does not exceed 0.5 atm., the solenoid valve is functioning properly.
5) Method of connecting pressure gauge (ex. 1)

- Using the REMOVER, disconnect the air pipe leading to the compressor at the right front solenoid valve.
- Connect the gauge manifold and the 3-WAY JOINT as a unit between the solenoid valve and the disconnected end of the air pipe.

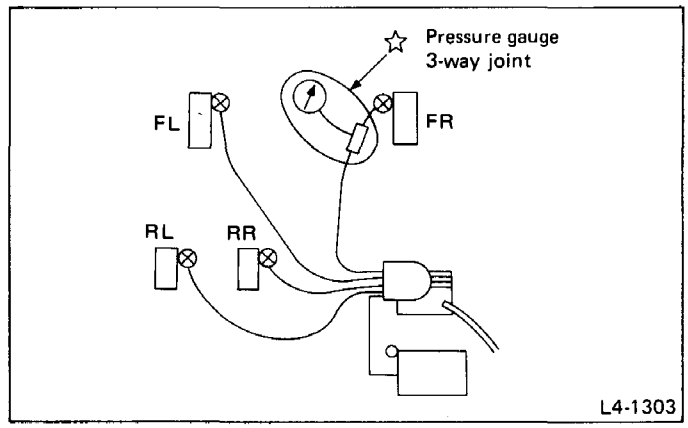

Fig. 78

6) If the pressure drop exceeded 0.5 atm. [in step 4) above], go to step 7) below.
7) Disconnect one of the air lines connected to the struts at the drier. In its place, connect a pressure gauge as shown in figure below.
8) Method of connecting pressure gauge (ex. 2)

- Using the REMOVER, disconnect the air line leading to the air suspension ASSY at the drier outlet.
- Connect the gauge manifold and the 3-WAY JOINT as a unit between the drier outlet and the disconnected end of the air pipe.

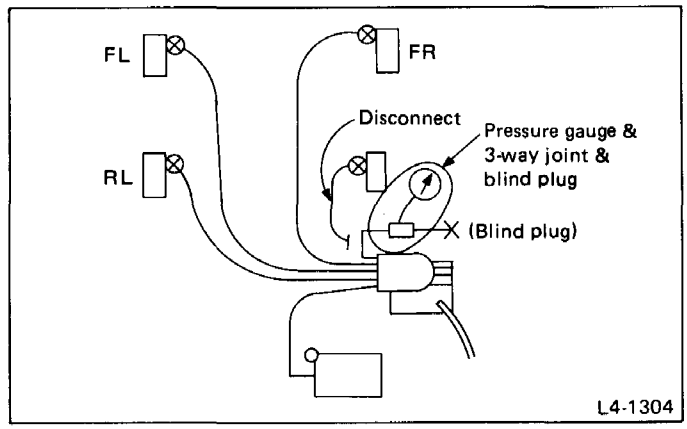

Fig. 79

9) Repeat steps 3) and 4) above.
10) If check results are O.K, repeat steps 7) and 8).
11) Repeat steps 7) through 10) to check the remaining struts. If any particular strut does not show a pressure drop, the affected air line is leaking.

A3) Pressure switch

1) Connect a pressure gauge.
2) Ground the air charge solenoid valve and compressor [5].
3) Apply a pressure of 9 to 10 atm, to the solenoid valve to check that the pressure switch turns OFF. If it does not turn OFF, the pressure switch is faulty or its circuit is broken.
4) Ground the air charge solenoid valve and the discharge solenoid valve.
5) Check that the pressure switch turns ON when less than 8.5 atm. pressure is applied to the solenoid valve. (If the pressure switch does not turn ON, it is faulty or its circuit is broken.

A4) Air leaks from air suspension assembly

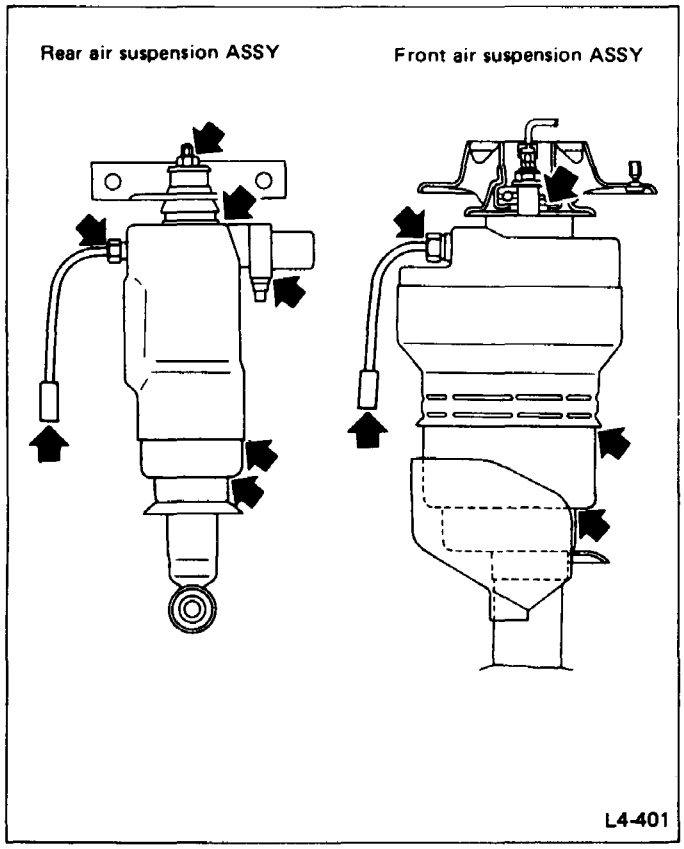

Fig. 80

Remove front or rear air suspension ASSY, and apply air into it. Put air suspension ASSY in water, and check for air leaks at places indicated by arrow.

a. Do not apply water to strut mount ball bearing. Apply SUBARU CRC (004301003) etc. to check for air leaks.
b. After checking, thoroughly remove water from each portion of air suspension ASSY by applying compressed air.

A5) Air leakage from air tank assembly

1) Connect a pressure gauge.
2) Ground the air charge solenoid valve. Read the pressure gauge 5 seconds after grounding the solenoid valve.
3) Wait about 10 minutes.
4) Repeat step 2) and check that the pressure drop is less than 0.5 atm.

A6) Vehicle height sensor

Compress and extend front or rear air suspension ASSY, and check with a tester if continuity exists between connector terminals of vehicle height sensor harness coming out of air suspension ASSY. Air suspension ASSY is in good condition if continuity exists as follows.

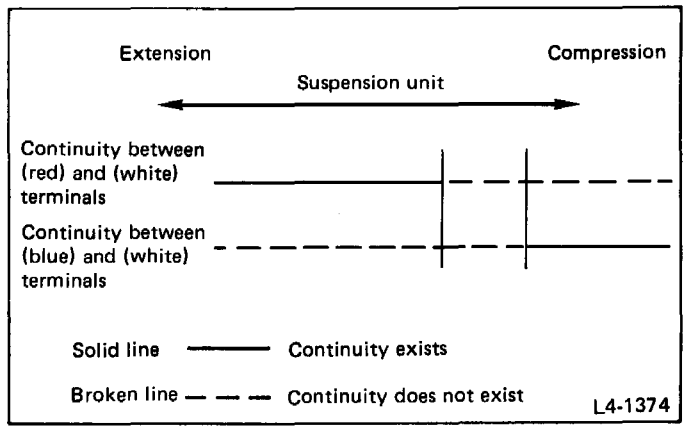

Fig. 81

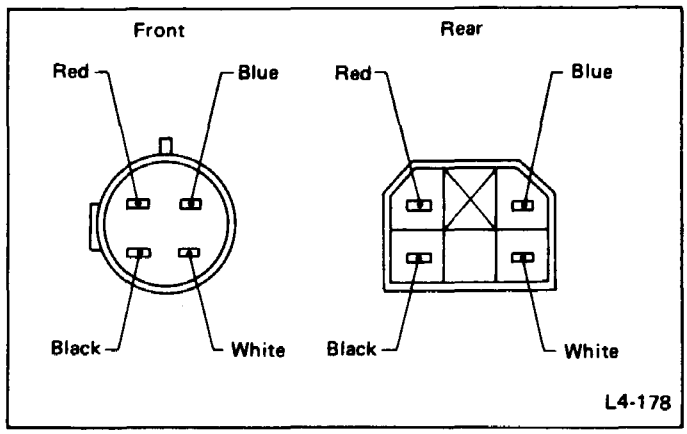

Fig. 82 Arrangement of connector terminals

When checking vehicle height sensor at body harness side connector to control unit, disconnect connector from control unit and check for continuity between terminals. The correspondence between terminals is as shown below.

Signal / Location	"NORMAL" position (White)	Low (Blue)	High (Red)
Front-Right	⑧	⑮	㉗
Front-Left	⑦	⑭	㉖
Rear-Right	⑤	㉓	㉕
Rear-Left	④	㉘	㉛

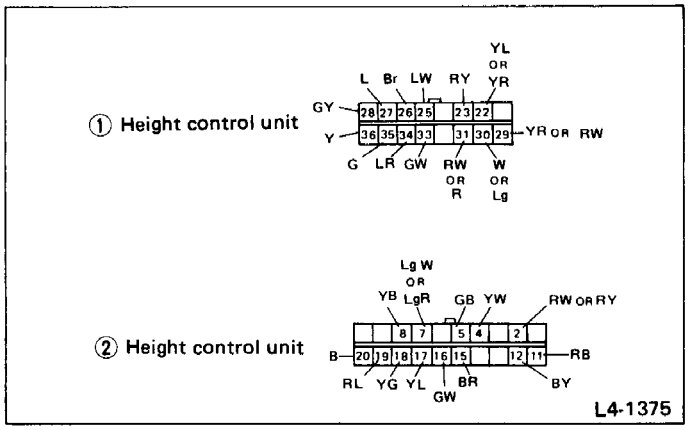

Fig. 83 Control unit connector and terminal

Vehicle height sensor consists of four self-holding reed switches, whose connections are made as shown in following figure.

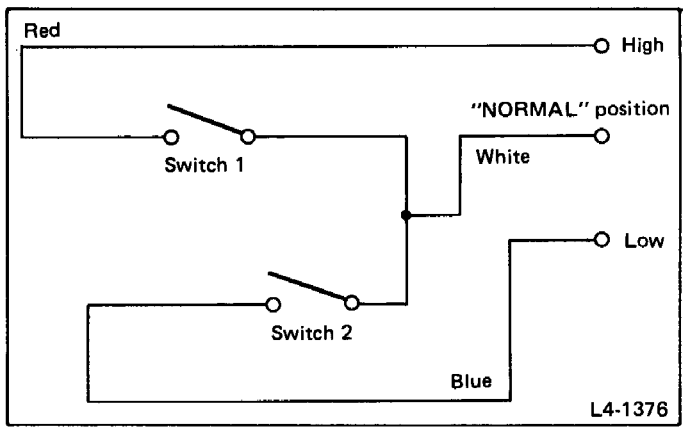

Fig. 84

A7) Poor sealing or air leak from solenoid valve

With compressed air applied to front or rear air suspension ASSY or air tank, disconnect air pipe from air joint, which is far from the above parts, by using AIR PIPE REMOVER (926520000), and check for air leaks.
Also check solenoid valve for air leaks.

A8) Break in solenoid valve

Apply 12 volts to coupler and check whether operating noise is heard. Or check whether there is continuity between terminals with a tester.

A9) Clogging in air line

Check each air line for clogging. Repair bent or twisted air pipe.

A10) Sticking of solenoid valve

Check that height of affected suspensions decreases when each set of the following parts are grounded.
1)
- Right front solenoid valve [1] and air discharge solenoid valve
- Left front solenoid valve [2] and air discharge solenoid valve
- Right rear solenoid valve [3] and air discharge solenoid valve
- Left rear solenoid valve [4] and air discharge solenoid valve

Also check that a sound (air-discharge) is heard when both the air discharge and the air charge valve are grounded.
2) If height of a particular suspension does not decrease, disconnect the air pipe from the air joint on the solenoid valve side of the affected strut. Use the PIPE REMOVER (926520000) to disconnect the air pipe.
Apply 12 volts across the connector terminals of the solenoid valve. (No polarity is established.)
3) When height decreases in step 2) above, the air pipe is faulty and must be replaced. When height does not decrease, the solenoid valve is malfunctioning and must be replaced.
If the front strut solenoid valve is faulty, also check the air pipe for clogging.

A11) Malfunction of compressor

Apply 12 volts to compressor to see if it operates.
Compressor motor contains a circuit breaker. So when motor temperature rises too high, the circuit breaker stops the motor to prevent it from burning up. If this happens, leave compressor alone, and it will return to normal condition when it cools down.

A12) Check on compressor relay

Compressor relay has terminal arrangement as shown in the figure.
A check on compressor relay should be made by applying ⊕ 12 volts to terminal B, grounding terminal A, and checking if continuity exists between terminals C and D. Also, check that continuity between terminals C and D does not exist without applying ⊕ 12 volts to terminal B.

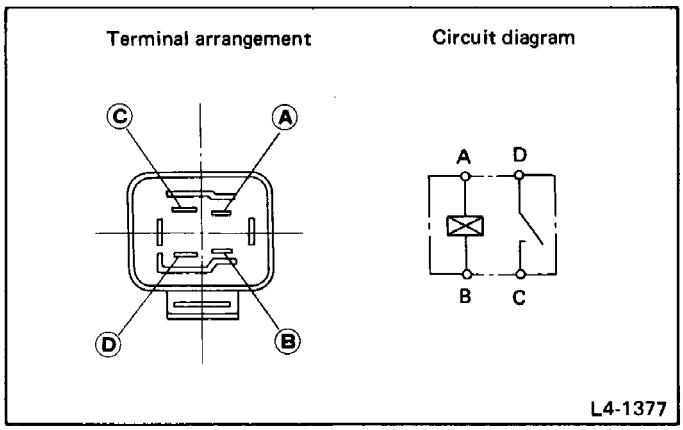

Fig. 85

A13) Check on electric circuit

Electric circuit should be checked with a load (such as solenoid valve and control unit) disconnected from the part in which continuity is to be examined.
As for signal wires other than power lines, check continuity and also check whether voltage is not applied to them and also whether they are not grounded.

A14) Air suspension check connector

1) Connector locations

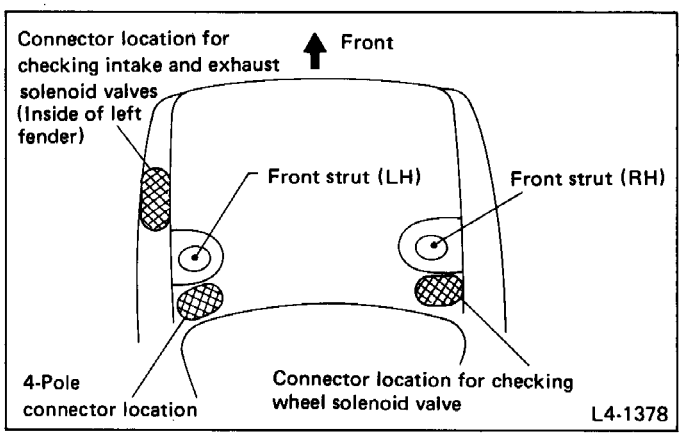

Fig. 86

2) Terminal arrangement
(1) For wheel solenoid valve checks
Ground the following terminals.

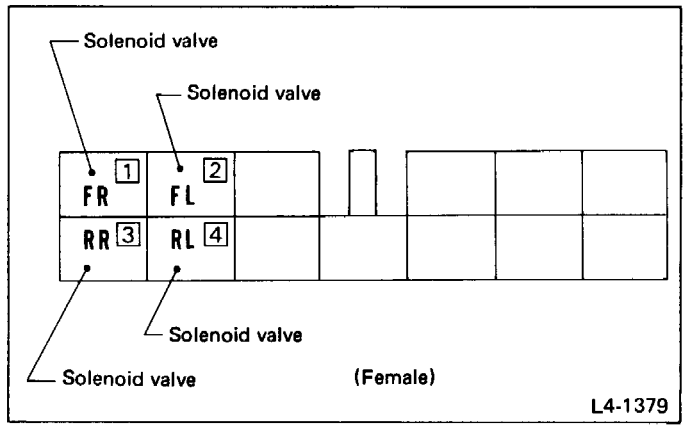

Fig. 87

3) 4-pole connector (for use with compressor relay)

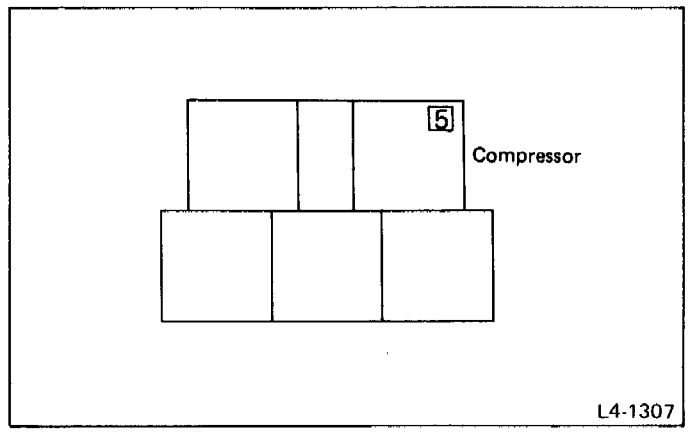

Fig. 88

4) Connector for air discharge or charge solenoid valve
Ground the following terminals after connecting female and male connectors.

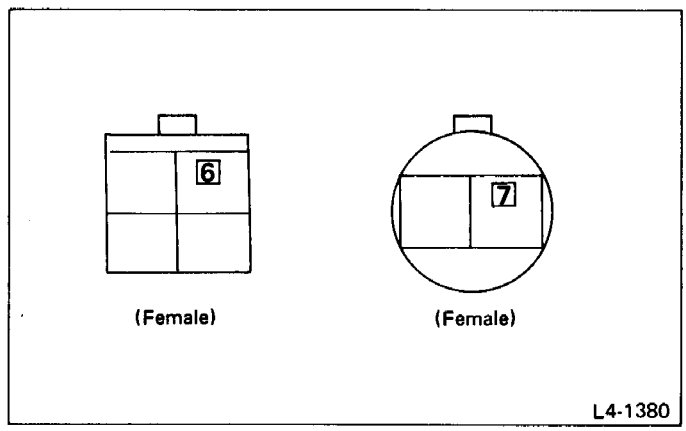

Fig. 89

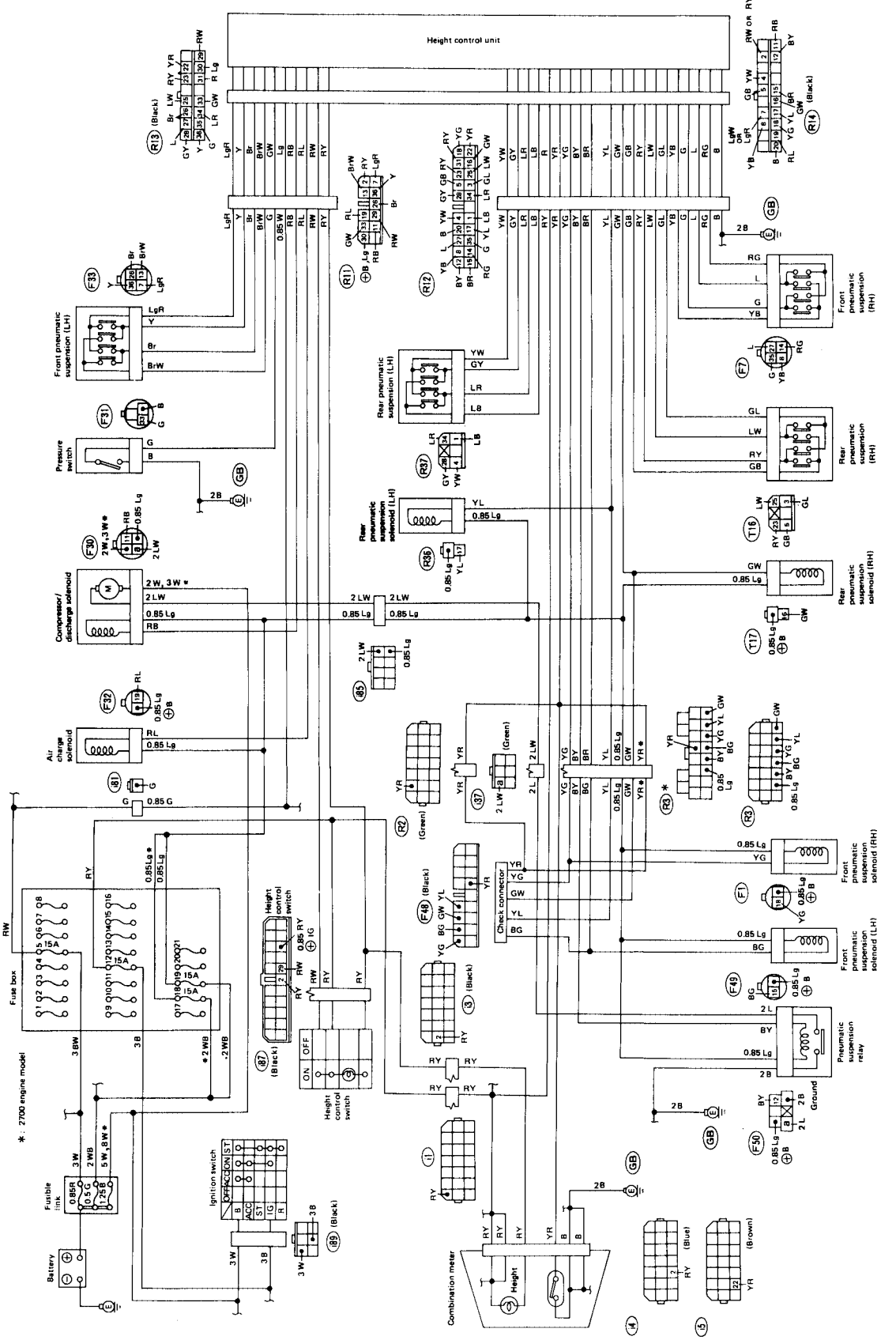

Fig. 90 Connector and terminal

L4-1381

WHEELS AND AXLES

4-2

SUBARU

1988

	Page
MECHANISM AND FUNCTION	2
Front Axle	2
Rear Axle	4
SPECIFICATIONS AND SERVICE DATA	6
SPECIFICATIONS	6
SERVICE DATA	8
COMPONENT PARTS	9
Front Axle	9
Rear Axle	11
SERVICE PROCEDURE	13
Front Axle	13
Rear Axle (FWD)	24
Rear Axle (4WD)	26
Wheel and Tire	29

MECHANISM AND FUNCTION

Front Axle

Because Front Wheel Drive system is adopted on the vehicle, drive shafts are front axle shafts. The inboard end of the axle shaft is connected to the differential via a constant velocity joint (double offset joint: DOJ) which provides flexible capabilities in the longitudinal direction while the outboard end is supported by ball bearings located inside the housing via a bell joint (BJ) which features a large operating angle.

Since the drive shaft employs constant velocity joints, it provides with smooth, even revolution of drive wheel without vibration.

The disc hub is engaged to BJ spindle by means of serration and secured by a castle nut and cotter pin via a center piece and washer spring.

After front axle parts have been repaired, toe-in should be adjusted.

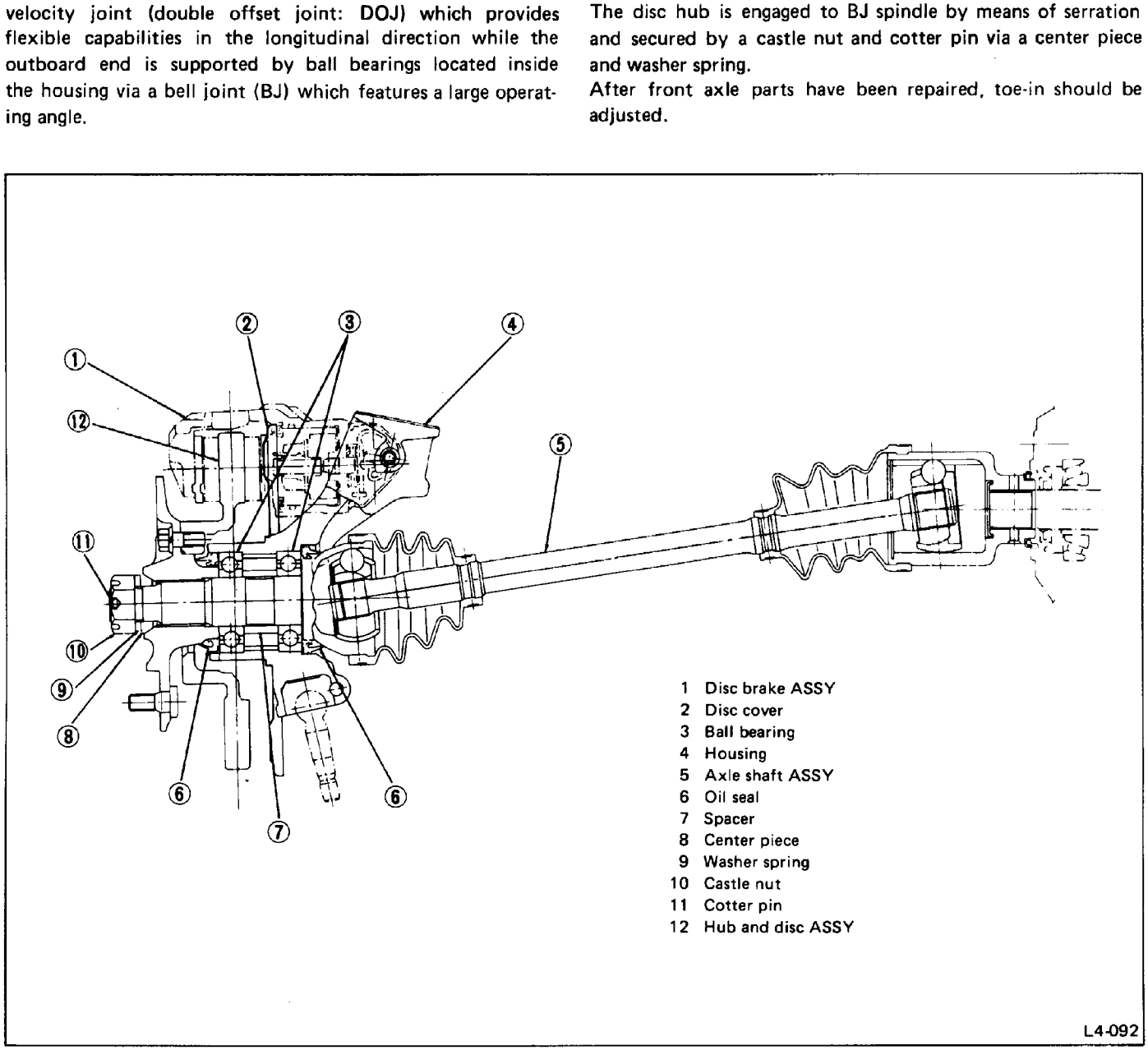

Fig. 1 Except XT6

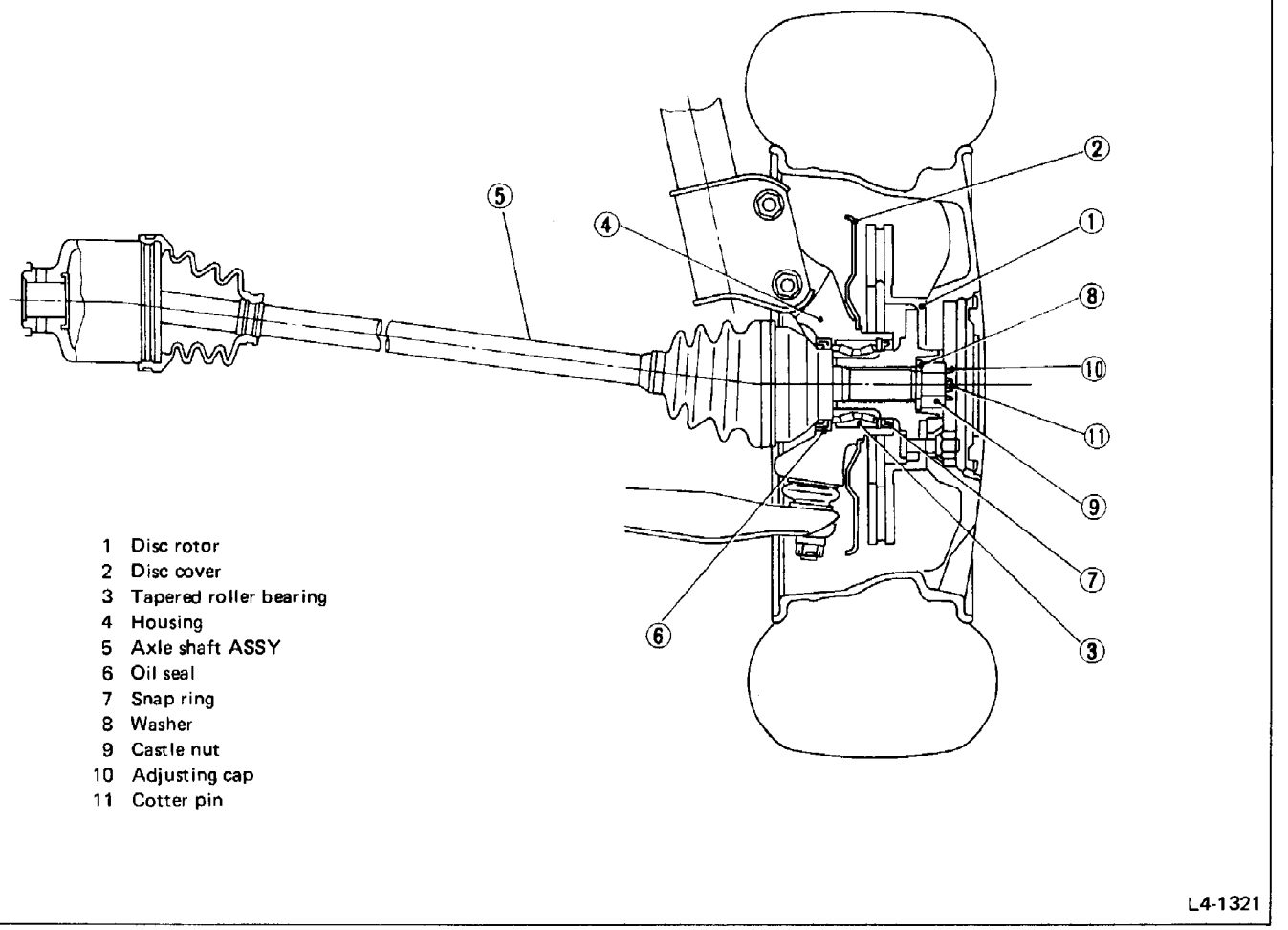
1 Disc rotor
2 Disc cover
3 Tapered roller bearing
4 Housing
5 Axle shaft ASSY
6 Oil seal
7 Snap ring
8 Washer
9 Castle nut
10 Adjusting cap
11 Cotter pin
L4-1321

Fig. 2 XT6

Rear Axle

FWD... The rear axle spindle is welded on the rear trailing arm, and the brake drum (drum brake models)/hub & disc ASSY (disc brake models) is attached to the spindle via the taper roller bearings.

4WD... The rear axle spindle is supported by bearings located inside the housing welded to the rear trailing arm. The brake drum (drum brake models)/hub & disc ASSY (disc brake models) is serrated and held to the spindle with a castle nut and cotter pin.

The brake drum/hub is provided with a fitting section for the disc wheel in order to prevent eccentric installation of the disc wheel and vibration in high-speed operations.

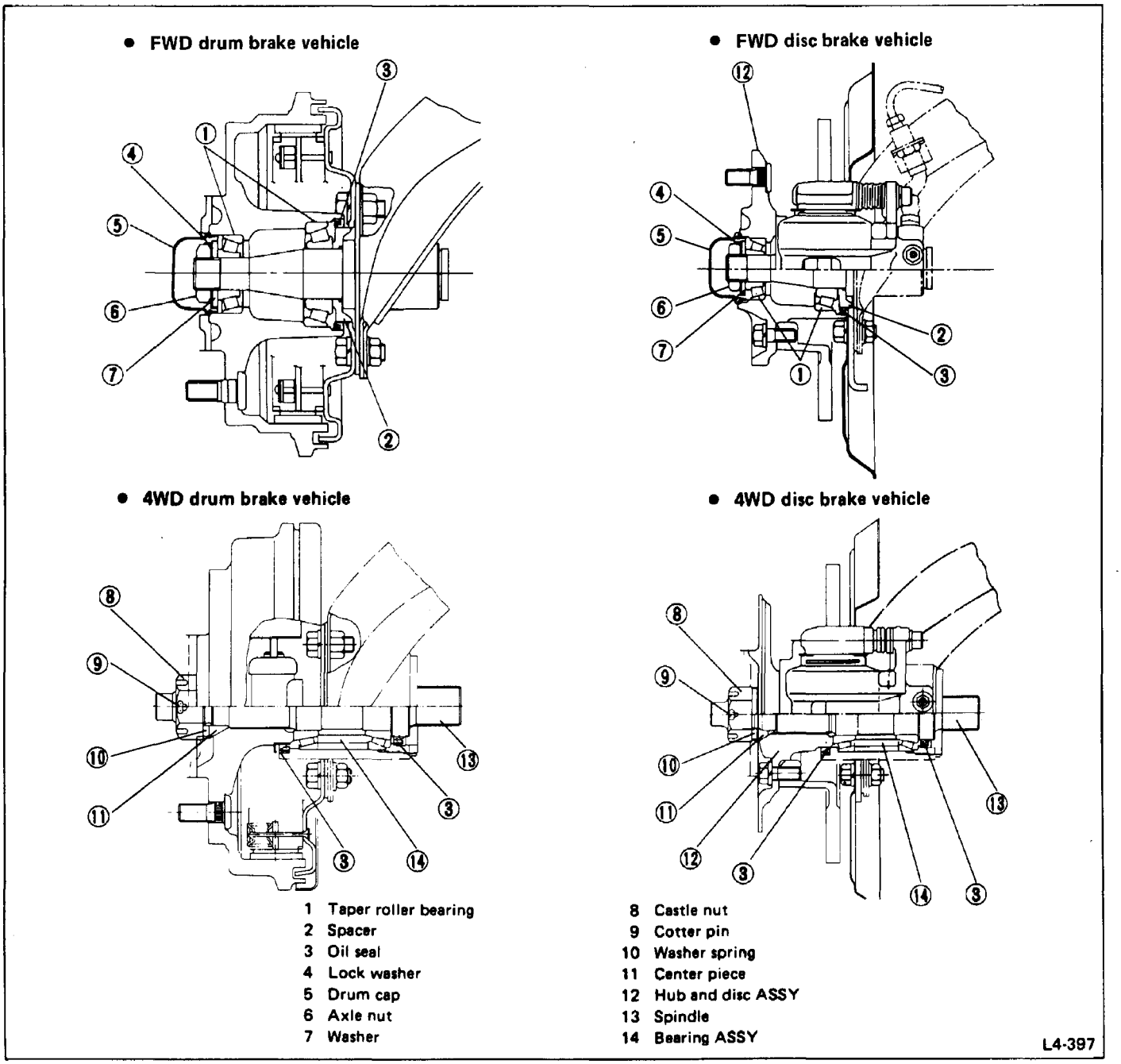

Fig. 3 Except XT6

• FWD disc brake vehicle

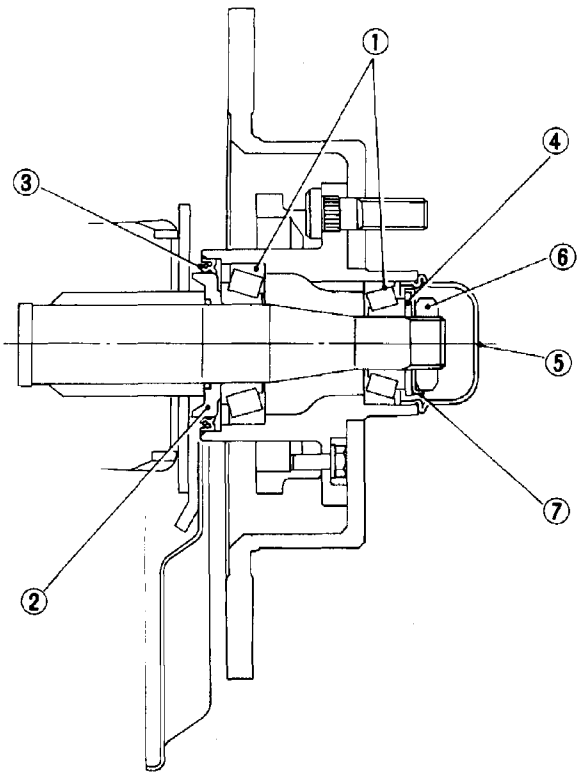

• 4WD disc brake vehicle

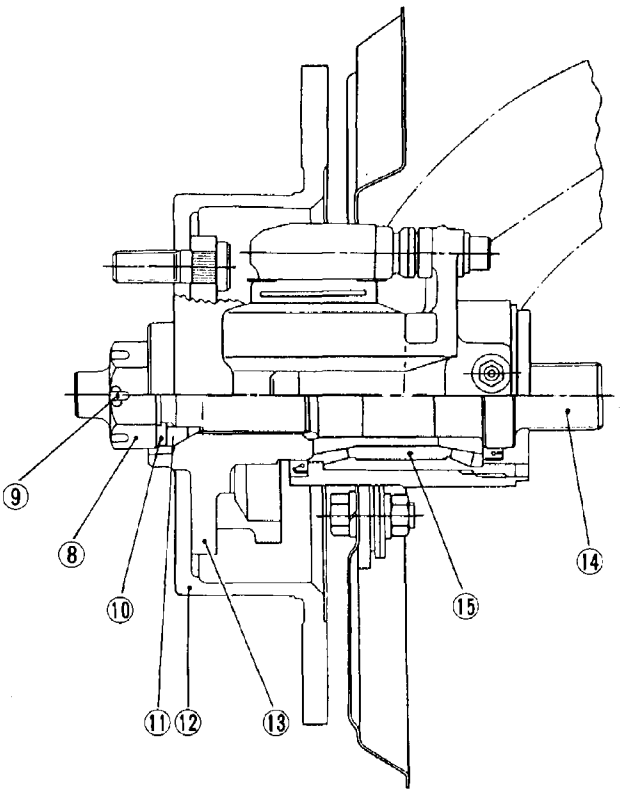

1 Tapered roller bearing
2 Spacer
3 Oil seal
4 Washer
5 Drum cap
6 Axle nut
7 Lock washer
8 Castle nut
9 Cotter pin
10 Washer spring
11 Center piece
12 Disc rotor
13 Hub
14 Spindle
15 Bearing ASSY

L4-1322

Fig. 4 XT6

SPECIFICATIONS AND SERVICE DATA

SPECIFICATIONS

• TIRE & WHEEL SIZE

Model		Front and Rear				Spare		
		Tire size	Rim size	Rim offset mm (in)	P.C.D. mm (in)	Tire size	Rim size	Rim offset mm (in)
FWD	DL	165SR13	5Jx13	45 (1.77)	140 (5.51)	T125/70D14	4Tx14	50 (1.97)
	GL	185/70HR13						
	XT6	195/60R14 85H	5-1/2JJx14		100 (3.94)	T135/70D15	4Tx15	43 (1.69)
4WD	GL	185/70HR13	5Jx13		140 (5.51)			53 (2.09)
	XT6	205/60R14 87H	5-1/2JJx14		100 (3.94)			46 (1.81)

"T-type" tire for temporary use is used as a spare tire.

• TIRE INFLATION PRESSURE

kPa (kg/cm^2, psi)

Front tire	Except XT6	196 (2.0, 28)
	XT6	226 (2.3, 33)
Rear tire		196 (2.0, 28)
Spare tire	T-type	412 (4.2, 60)

• FRONT AXLE SHAFT ASSEMBLY

Model	Type of axle shaft ASSY	Shaft diameter (D) mm (in)	DOJ	
			Cooling groove	No. of spline teeth
Except XT6	87AC-23	23.8 (0.937)	With	23
	87AC-25			25
	95AC-23		With	23
	95AC-25			25
XT6	95AC-25	28 (1.10)	With	25
	100AC-25	25.4 (1.000)		

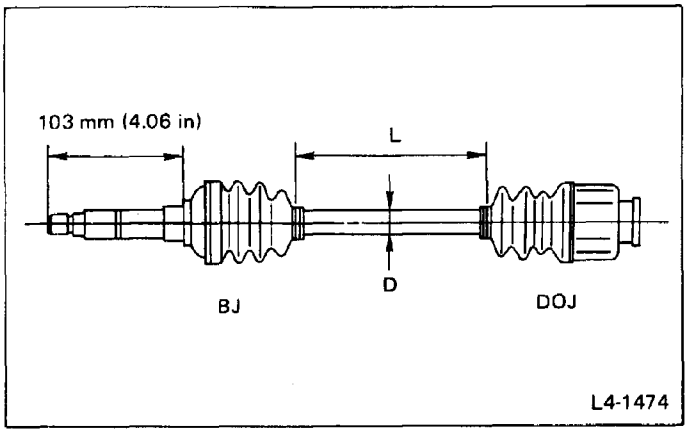

Fig. 5

Application table

Power unit	FWD		4WD	
	MT	AT	MT	AT
Multi-Point Fuel Injection	87AC-23	87AC-25	87AC-23	
XT6	100AC-25		95AC-25	

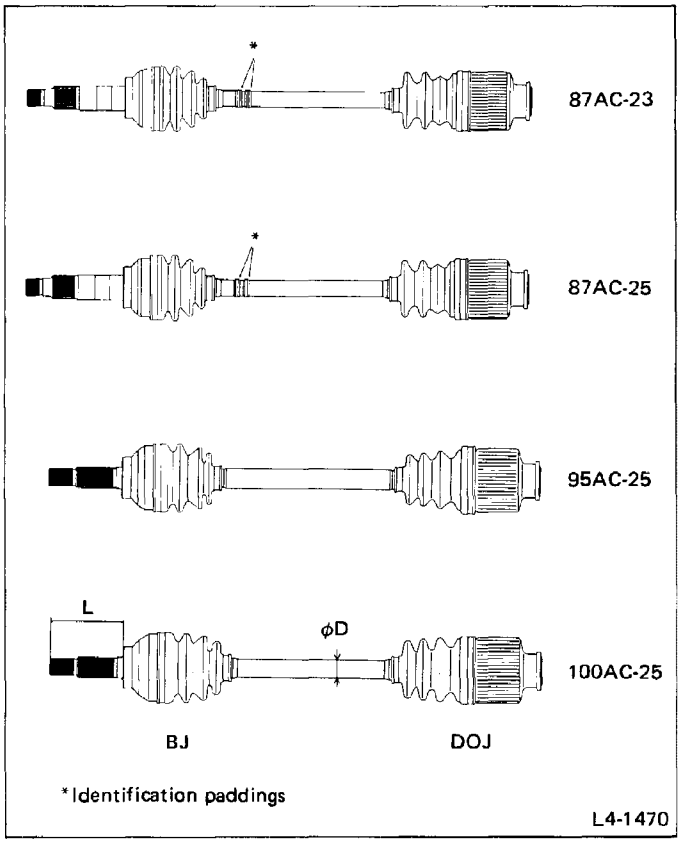

Fig. 6

Proper use of front axle shaft ASSY 95AC-23 and 95AC-25

95AC axle shaft is available in two different sizes to suit the differential spindle in the transmission; DOJ spline 23 teeth type [spline dia. 27 mm (1.06 in) dia.] and DOJ spline 25 teeth type [spline dia. 30 mm (1.18 in) dia.]. These shafts must be used properly according to the "Application Table". When replacing a single DOJ unit or axle shaft ASSY, carefully check the actual vehicle to avoid improper use of axle shaft. The axle shafts 95AC-23 and 95AC-25 can be distinguished by the different shape of the DOJ small end as shown in the figure.

Improper combination of transmission spindle and DOJ spline will result in the following faulty conditions.

a. 87AC-23, 95AC-23 combined with thick spindle [30 mm (1.18 in) dia.]:

The axle shaft cannot be installed because the DOJ spline diameter is small [27 mm (1.06 in) dia.].

b. 87AC-25, 95AC-25 combined with thin spindle [27 mm (1.06 in) dia.]:

A large play will be formed between DOJ and spindle. (Fitting the DOJ to spindle is too loose.) At the time of vehicle's starting the spring pin will break, and a large noise will be generated, then the vehicle will fail to go forward (FWD mode) as the front differential rotates idly.

SERVICE DATA

<table>
<tr><th colspan="2">Item</th><th>Standard</th><th>Service Limit</th></tr>
<tr><td>Rear wheel bearing (FWD only)</td><td>Preload (Starting force when measured at hub bolt)</td><td colspan="2">8.34 – 14.22 N
(0.85 – 1.45 kg, 1.87 – 3.20 lb)</td></tr>
<tr><td>Wheel balancing</td><td>Dynamic unbalance</td><td colspan="2">Less than 6 g (0.21 oz)</td></tr>
<tr><td></td><td colspan="3">Balance weight part number
<table>
<tr><th>For steel wheel</th><th>Weight g (oz)</th><th>For aluminum wheel</th></tr>
<tr><td>723141010</td><td>10 (0.35)</td><td>23141GA470</td></tr>
<tr><td>723141020</td><td>20 (0.71)</td><td>23141GA490</td></tr>
<tr><td>723141030</td><td>30 (1.06)</td><td>23141GA510</td></tr>
<tr><td>723141040</td><td>40 (1.41)</td><td>23141GA530</td></tr>
<tr><td>723141050</td><td>50 (1.76)</td><td>23141GA550</td></tr>
<tr><td>723141060</td><td>60 (2.12)</td><td>23141GA570</td></tr>
<tr><td>723141070</td><td>5 (0.18)</td><td>23141GA460</td></tr>
<tr><td>723141080</td><td>15 (0.53)</td><td>23141GA480</td></tr>
<tr><td>723141090</td><td>25 (0.88)</td><td>23141GA500</td></tr>
<tr><td>723141100</td><td>35 (1.23)</td><td>23141GA520</td></tr>
<tr><td>723141110</td><td>45 (1.59)</td><td>23141GA540</td></tr>
<tr><td>723141220</td><td>55 (1.94)</td><td></td></tr>
</table></td></tr>
</table>

COMPONENT PARTS

Front Axle

1. Except XT6

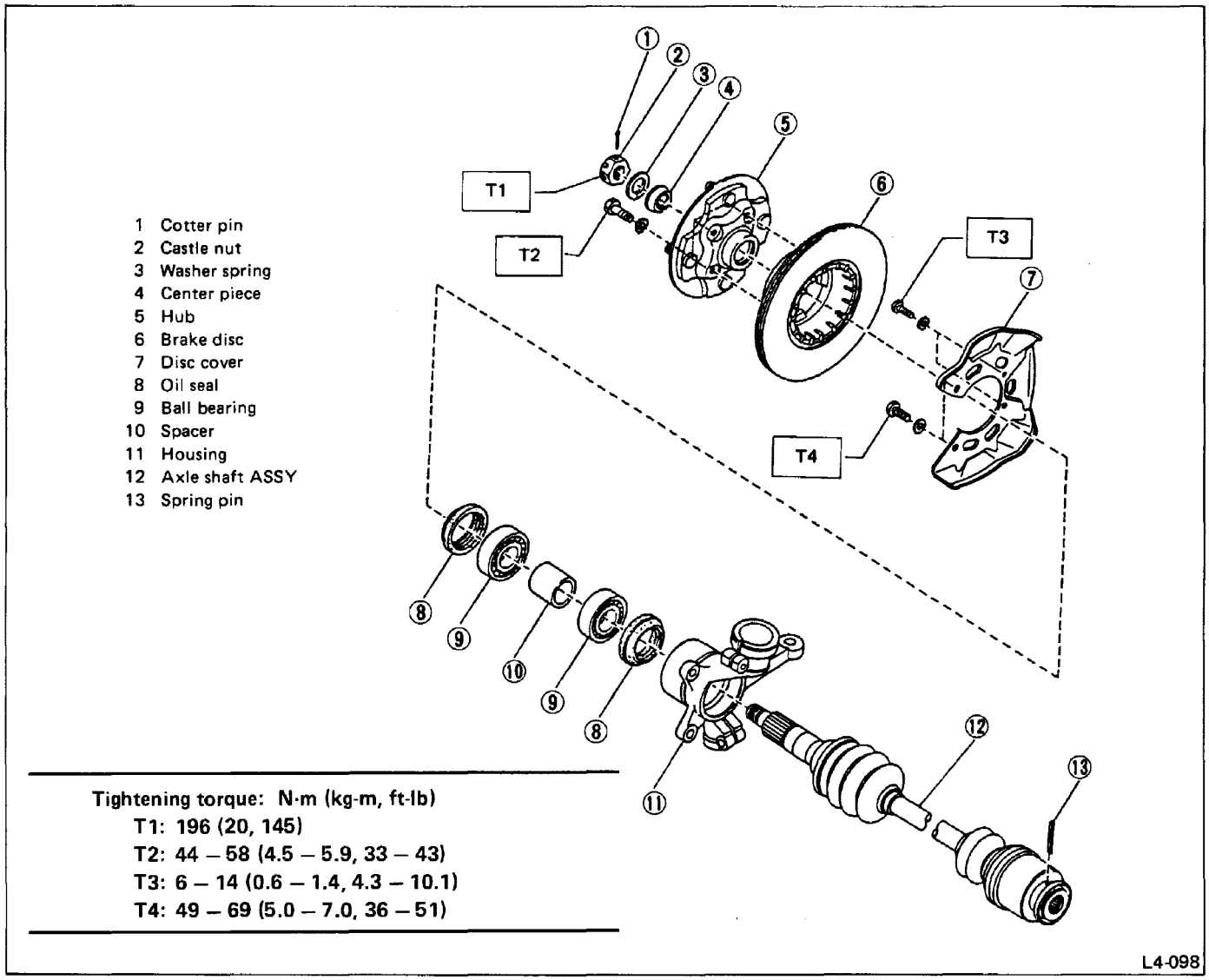

Fig. 7

2. XT6

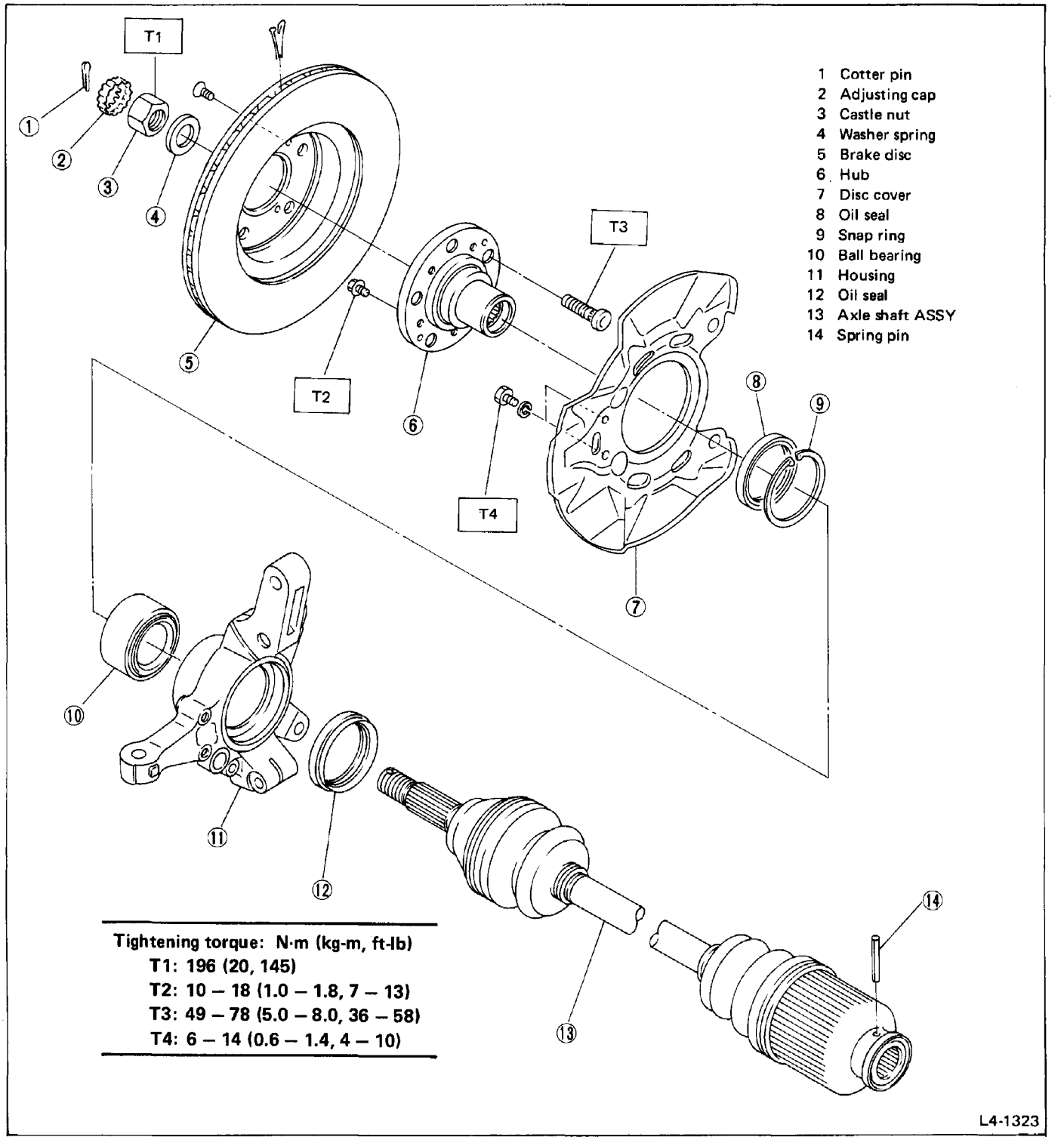
T1
T2
T3
T4
1 Cotter pin
2 Adjusting cap
3 Castle nut
4 Washer spring
5 Brake disc
6 Hub
7 Disc cover
8 Oil seal
9 Snap ring
10 Ball bearing
11 Housing
12 Oil seal
13 Axle shaft ASSY
14 Spring pin
Tightening torque: N·m (kg-m, ft-lb)
T1: 196 (20, 145)
T2: 10 – 18 (1.0 – 1.8, 7 – 13)
T3: 49 – 78 (5.0 – 8.0, 36 – 58)
T4: 6 – 14 (0.6 – 1.4, 4 – 10)
L4-1323

Fig. 8

Rear Axle

1. FWD (Except XT6)

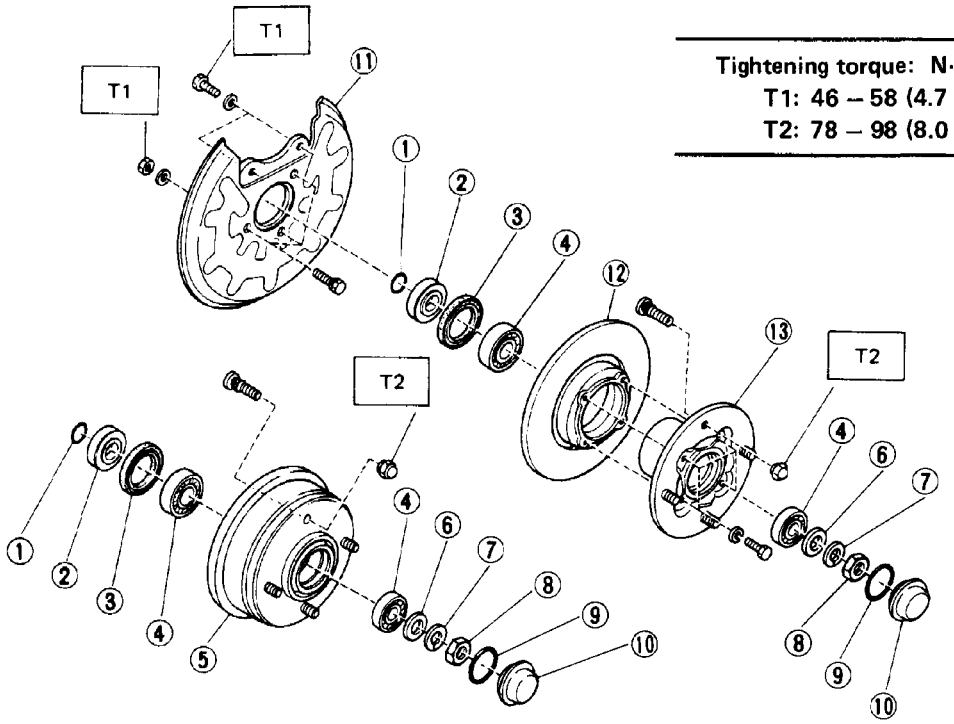

Tightening torque: N·m (kg-m, ft-lb)
T1: 46 – 58 (4.7 – 5.9, 34 – 43)
T2: 78 – 98 (8.0 – 10.0, 58 – 72)

Fig. 9

2. 4WD (Except XT6)

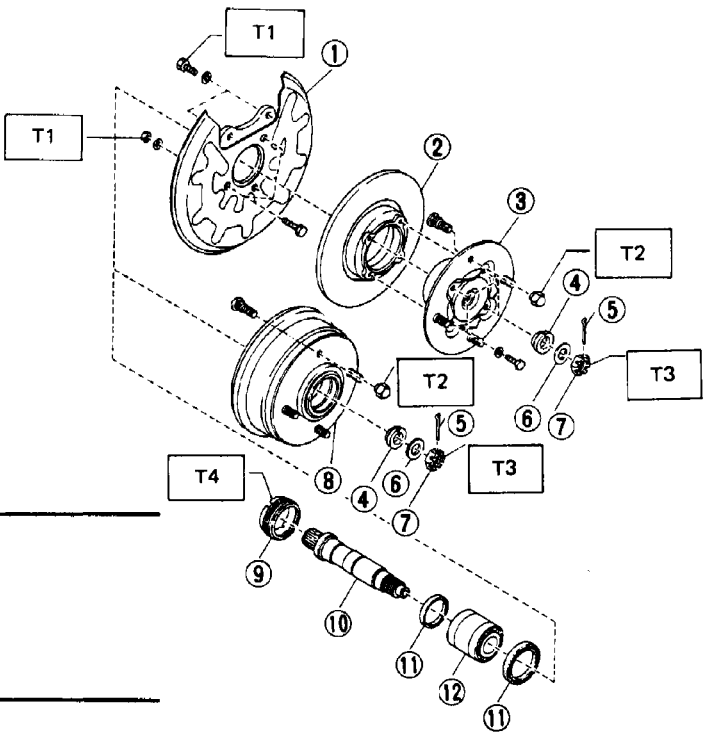

1 Disc cover
2 Brake disc
3 Hub
4 Center piece
5 Cotter pin
6 Washer spring
7 Castle nut
8 Brake drum
9 Ring nut
10 Spindle
11 Oil seal
12 Bearing ASSY

Tightening torque: N·m (kg-m, ft-lb)
T1: 46 – 58 (4.7 – 5.9, 34 – 43)
T2: 78 – 98 (8.0 – 10.0, 58 – 72)
T3: 196 (20, 145)
T4: 172 – 221 (17.5 – 22.5, 127 – 163)

Fig. 10

3. FWD (XT6)

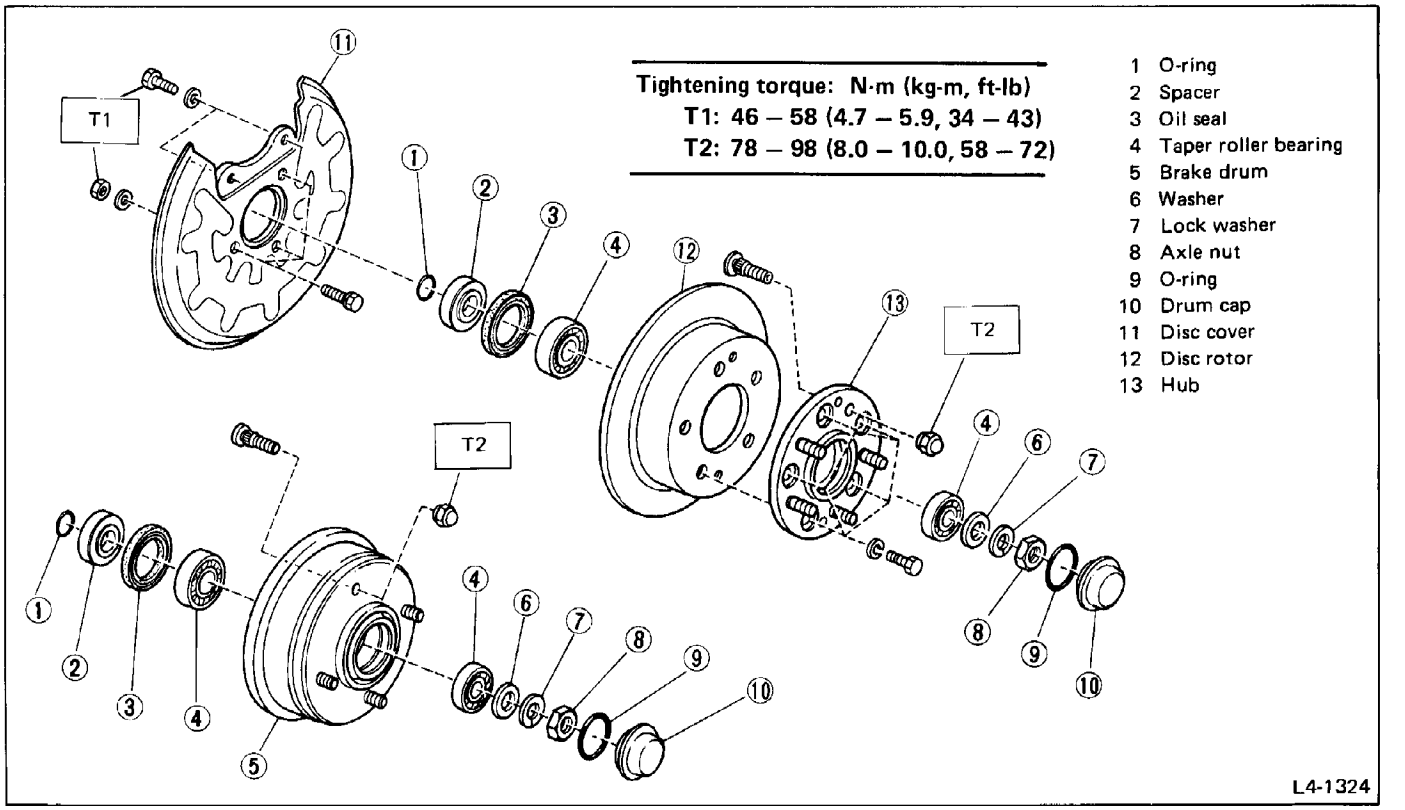

Fig. 11-1

4. 4WD (XT6)

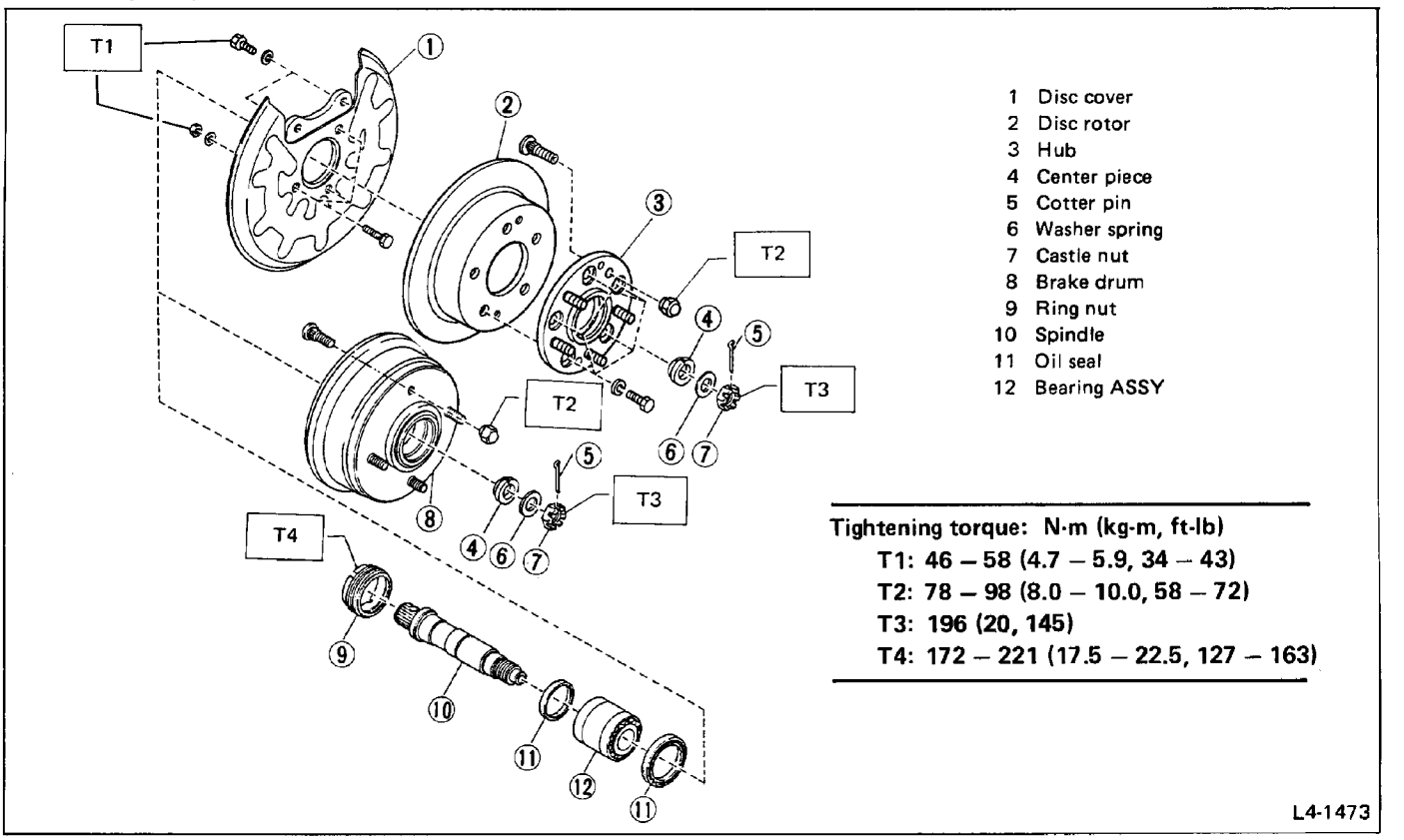

Fig. 11-2

SERVICE PROCEDURE

Front Axle

Housing (Except XT6)

REMOVAL

1) Disconnect ground cable from battery.
2) Apply parking brake.
3) Remove front wheel cap and cotter pin, and loosen castle nut and wheel nuts.
4) Jack up vehicle, support it with safety stands (rigid racks), and remove front tires and wheels.
5) Release parking brake.
6) Pull out parking brake cable outer clip from caliper.
7) Disconnect the parking brake cable end from caliper lever.
8) Loosen two bolts, and remove the disc brake ASSY from housing.

Keep the removed disc brake ASSY suspended from strut with string.

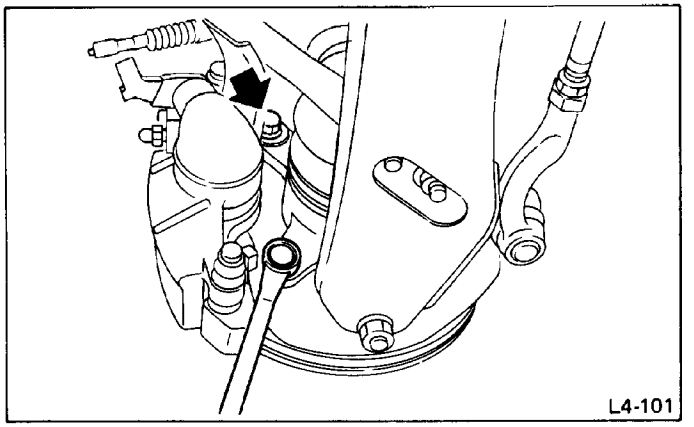

Fig. 12

9) Remove two bolts which connect housing and damper strut.
10) Remove cotter pin and castle nut, and disconnect tie-rod end ball joint from the housing knuckle arm by using a puller.
11) Disconnect strut from housing by opening slit of housing and by lowering housing gradually with care of not damaging BJ boot.

a. Do not expand the slit of housing more than 4 mm (0.16 in).
b. If housing is hard to remove from strut, lightly tap hub & disc with spare tire.

12) Remove castle nut, washer spring and center piece on axle shaft, and take out hub & disc ASSY.
13) Remove disc cover.
14) Attach PULLER (926470000) to housing and drive axle shaft out of housing toward engine at the bearing location.

When inner bearing and/or inner oil seal are/is left on axle shaft, remove them/it with a puller.

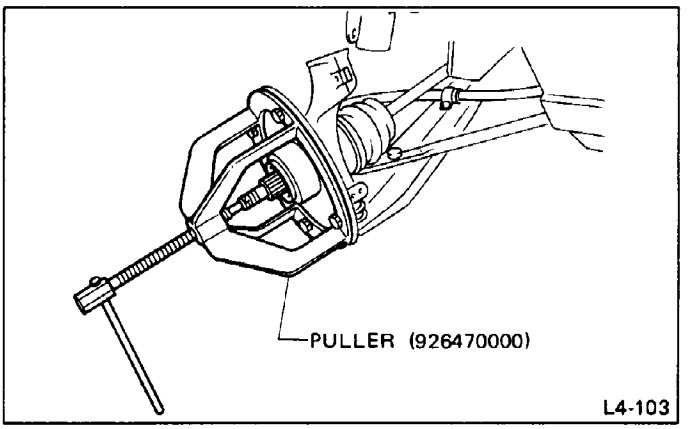

Fig. 13

15) Disengage transverse link ball joint from housing and detach housing.

DISASSEMBLY

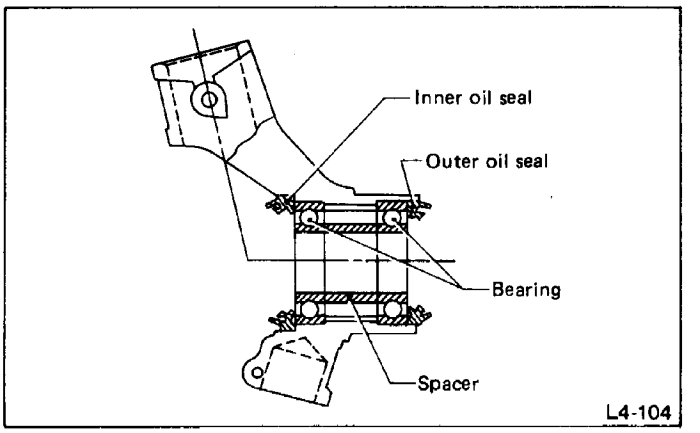

Fig. 14

1) Move spacer in radial direction with a finger.
2) Hold an aluminum or brass bar against inner race of bearing.
Lightly tap the bar with a plastic hammer to drive bearing out of housing together with oil seal.

a. Do not tap bearing with a steel hammer, otherwise the bearing will be damaged.
b. Tap evenly along entire periphery of bearing inner race.

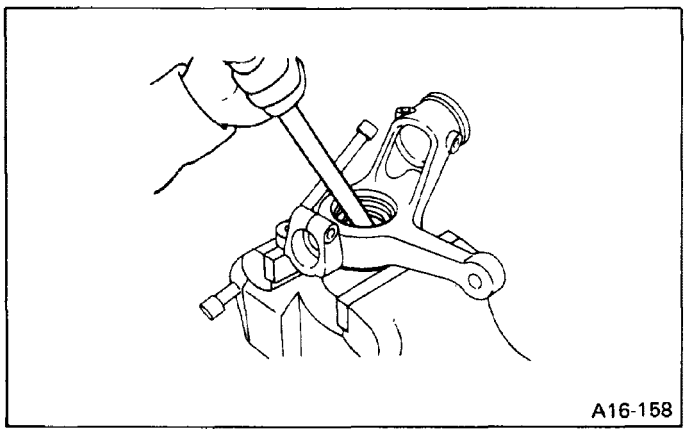
A16-158

Fig. 15

3) Pull out spacer.
4) Hold an aluminum or brass bar against outer race or inner race of bearing.
Lightly tap the bar with a plastic hammer to drive bearing out of housing together with oil seal.

a. Tap evenly along entire periphery of bearing outer race or inner race.
b. Do not reuse the oil seal.

ASSEMBLY

Press is necessary in assembling.
1) Set housing on DIE (INSTALLER: 926490000).
2) Set bearing onto PUNCH (INSTALLER: 926490000) and gradually press it into housing till outer race of bearing comes to contact with housing stopper.

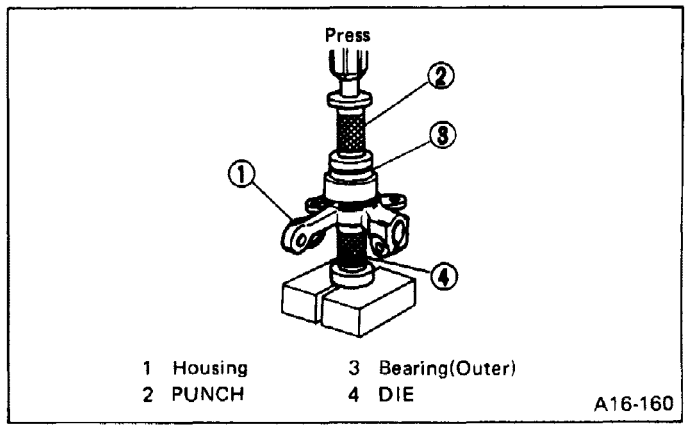

Fig. 16

3) Turn upside down housing, and apply about 10 to 13 g (0.35 to 0.46 oz) of bearing grease into inside of housing.
4) Insert spacer.

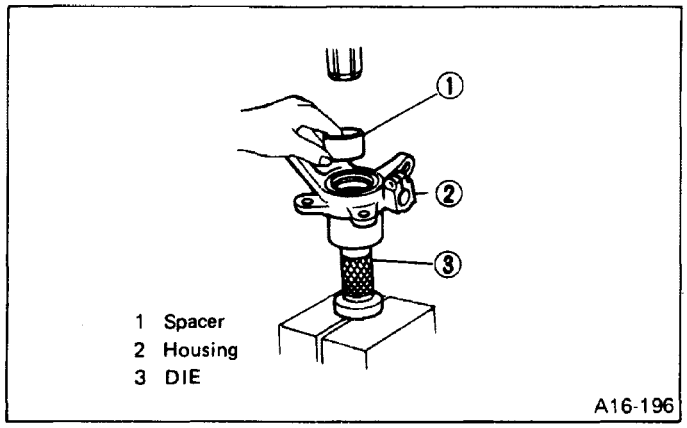

Fig. 17

5) The other bearing is pressed in as shown in figure.

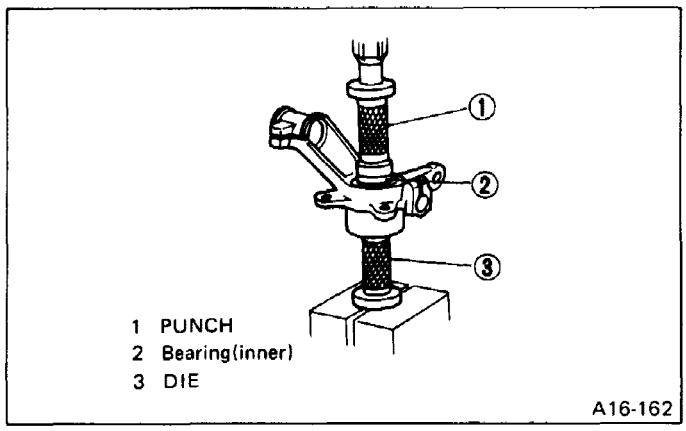

Fig. 18

6) Set housing on DIE.
Apply sufficient grease to oil seal lip.
7) Insert outer oil seal into the groove of PUNCH so that the oil seal lip faces the groove, and gradually press it into housing till the face of PUNCH comes to contact with bearing outer race.

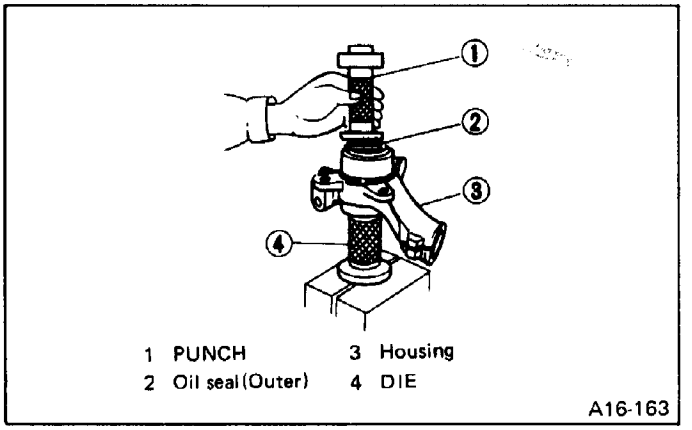

Fig. 19

Do not confuse outer oil seal with the inner since their outside diameters differ as follows:
Outer oil seal . . . . . 72 mm (2.83 in) dia.
Inner oil seal . . . . . 76 mm (2.99 in) dia.

8) Turn upside down housing and set it on PUNCH.
9) Insert inner oil seal into the groove of DIE so that the oil seal lip faces the groove, and gradually press it into housing.

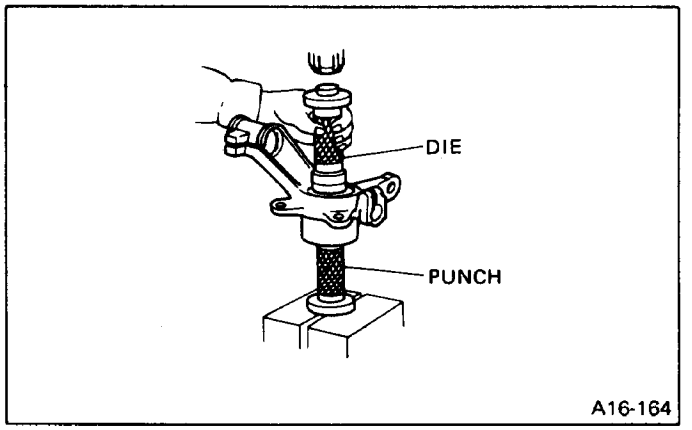

Fig. 20

INSTALLATION

1) Fit housing onto axle shaft and attach spacer of INSTALLER (925130000 or 922430000) on outer bearing inner race taking care not to damage the oil seal lip.
Then, connect the rod of INSTALLER to the thread of axle shaft so that housing does not drop off from axle shaft.
2) Install transverse link ball joint to housing.

Tightening torque:
29 – 39 N·m (3.0 – 4.0 kg-m, 22 – 29 ft-lb)

3) Turn the handle while holding the rod end by means of spanner, thus housing is pushed in.

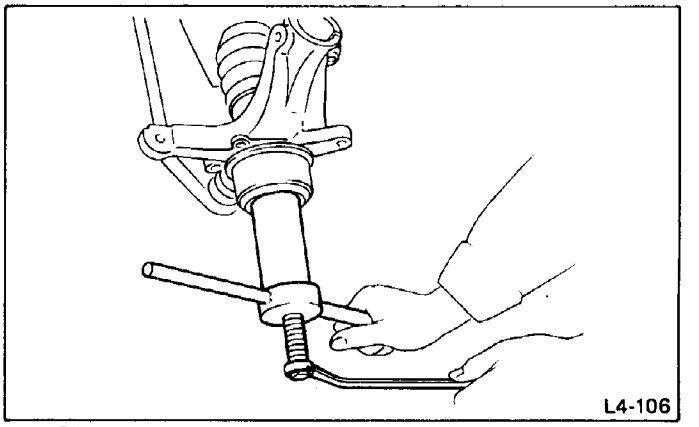

Fig. 21

4) Connect damper strut and housing by installing two bolts.

Tightening torque:
29 – 39 N·m (3.0 – 4.0 kg-m, 22 – 29 ft-lb)

5) Connect tie-rod end ball joint and housing knuckle arm.

Tightening torque (Castle nut):
25 – 29 N·m (2.5 – 3.0 kg-m, 18 – 22 ft-lb)

After tightening to the specified torque, further tighten castle nut within 60° to align holes of castle nut and ball stud.
Then insert cotter pin into ball stud and bend it around castle nut.
6) Install disc cover to housing.

Tightening torque:
6 – 14 N·m (0.6 – 1.4 kg-m, 4.3 – 10.1 ft-lb)

7) Install hub & disc ASSY onto axle shaft.

Be sure to insert (press) hub & disc ASSY onto axle shaft until the end surface of hub contacts ball bearing.
If the ASSY is hard to press, rotate it to locate the point where it is easily pressed.

8) Install disc brake ASSY to housing by two bolts.

Tightening torque:
49 – 69 N·m (5.0 – 7.0 kg-m, 36 – 51 ft-lb)

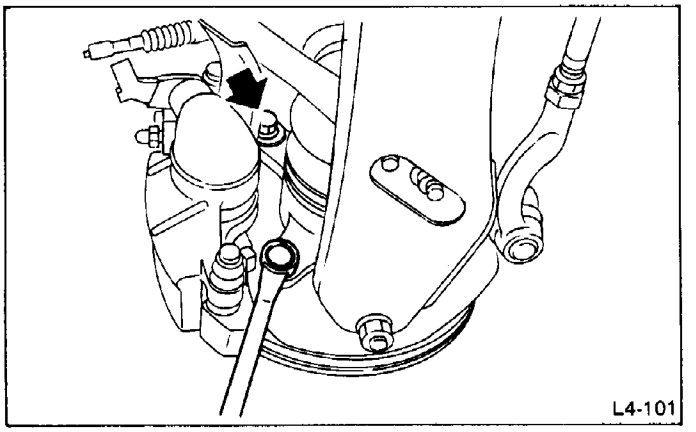

Fig. 22

9) Connect parking brake cable to brake ASSY.

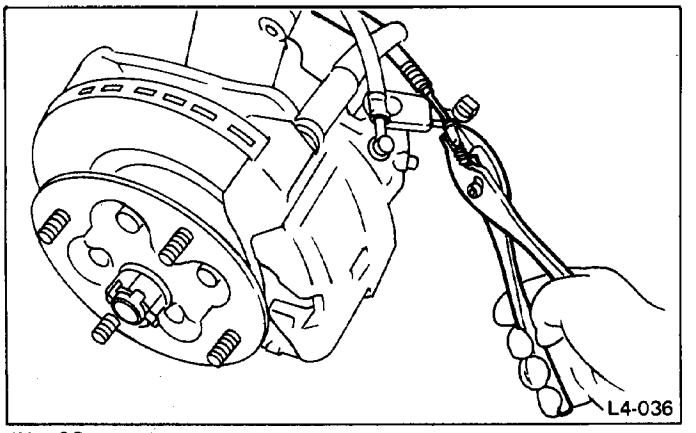

Fig. 23

10) Apply parking brake.
11) Fit center piece, washer spring and castle nut in this order onto axle shaft and tighten castle nut to the specified torque, then insert a new cotter pin and bend it around castle nut.

After tightening the nut to the specified torque, retighten further within 30° until a slot of the castle nut is aligned to the hole in the axle shaft.

Tightening torque:
196 N·m (20 kg-m, 145 ft-lb)

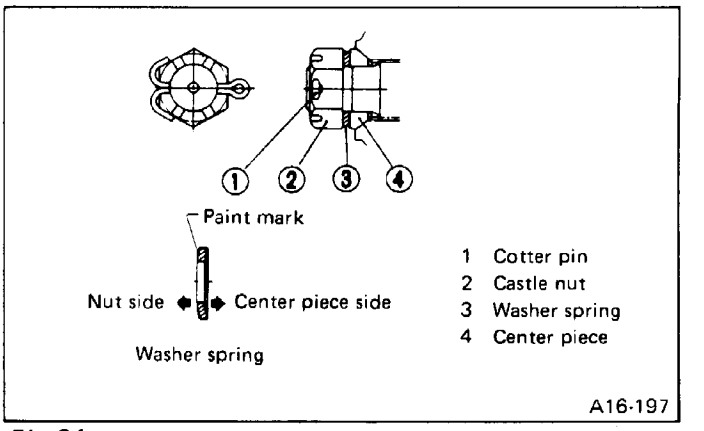

Fig. 24

12) Install wheels and wheel caps.
13) Put down vehicle from rigid racks.
14) Connect ground cable with negative terminal of battery.

Housing (XT6)

REMOVAL

1) Remove cotter pin and castle nut which secure tie-rod end ball joint to housing knuckle arm.
2) Using a puller, disconnect tie rod end ball joint from housing knuckle arm.
3) Remove 10-mm bolt. Extract trasverse link ball joint from houisng.
4) Remove two bolts which connect housing and damper strut, and disconnect strut from housing.

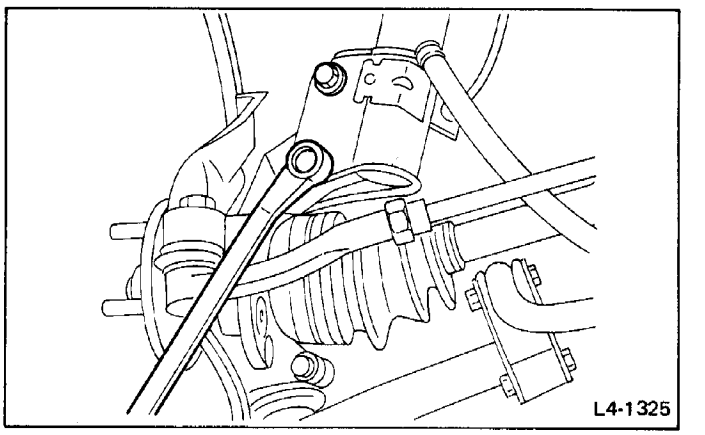

Fig. 25

DISASSEMBLY

1) Using HUB STAND (927080000), support housing & hub ASSY securely.
2) Attach HUB PULLER (927060000) to housing and drive hub bearing out.

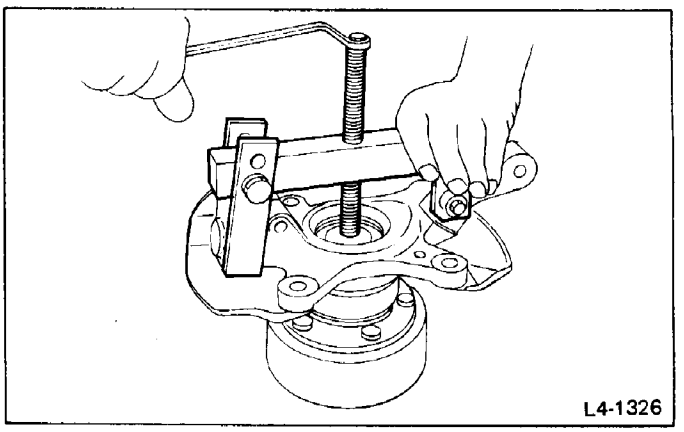

Fig. 26

3) If bearing inner race remains in the hub, remove it a suitable tool (commercially available).

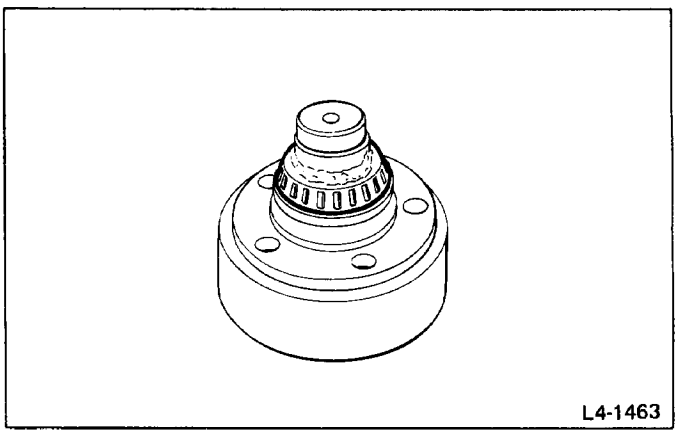

Fig. 27

a. Remove oil seal. Cut it off with shears to facilitate removal.
b. Be careful not to scratch polished area of hub.
c. Be sure to install inner race on the side of outer race from which it was removed.

4) Remove two bolts which secure disc cover. Remove disc cover.
5) Using a standard screwdriver, remove outer and inner oil seals.

Do not use old oil seals.

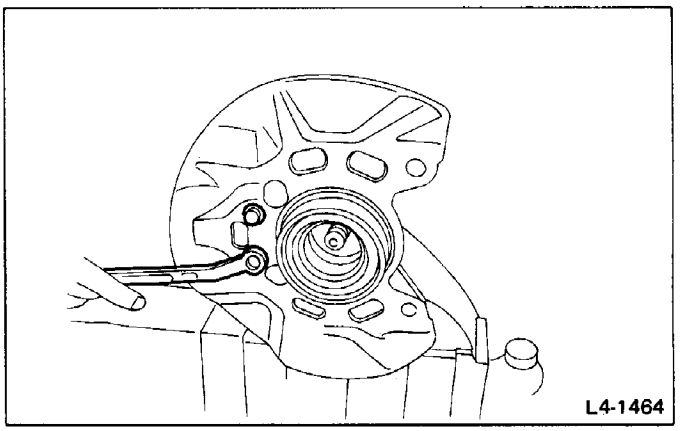

Fig. 28

6) Using pliers, remove snap ring.
7) Using HOUSING STAND (927090000), support housing securely.
8) Using BEARING PULLER (927100000), press inner race to drive out outer bearing.

a. Do not remove outer race unless it is faulty.
b. Discard outer race after removal.
c. Do not replace inner or outer race separately; always replace as a unit.

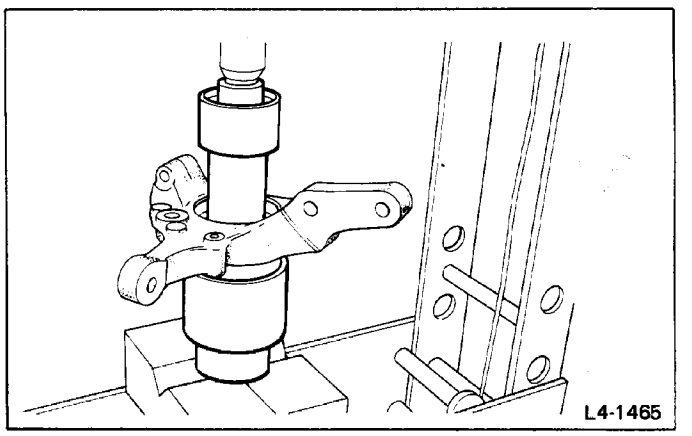

Fig. 29

9) Loosen bolts which secure tone wheel to hub. Remove tone wheel.

10) Using HUB STAND (927080000) and a hydraulic press, drive hub bolts out.

Be careful not to hammer hub bolts. This may deform hub.

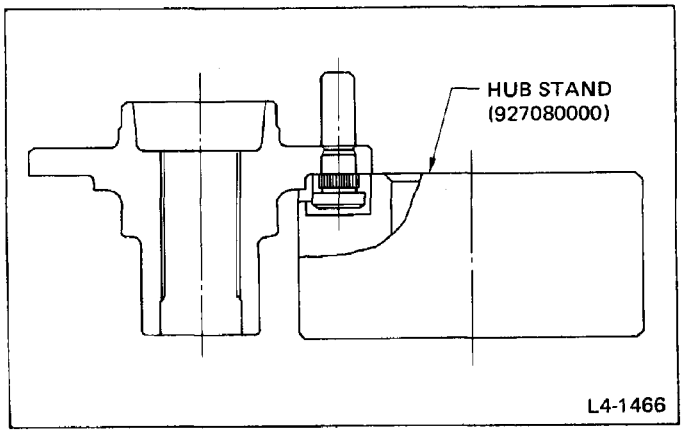

Fig. 30

ASSEMBLY

1) Attach hub COMPL to HUB STAND (927080000) securely.
2) Using a hydraulic press, press new hub bolts into place.

a. Use 12 mm (0.47 in) dia. holes in HUB STAND to prevent bolts from tilting.
b. Be sure to press hub bolts until their seating surfaces contact the hub.

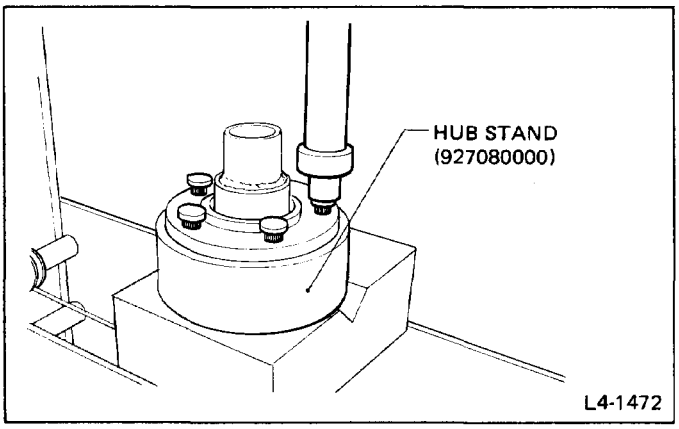

Fig. 31

3) Clean dust or foreign particles from inside the housing.
4) Using HOUSING STAND (927090000) and BEARING PULLER (927100000), press a new bearing into place.

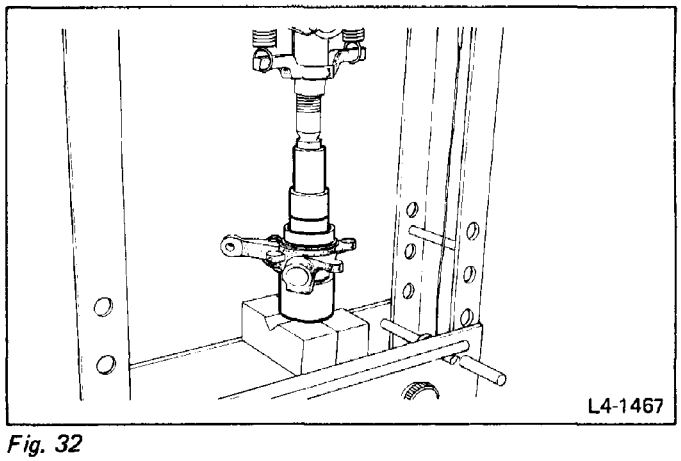

Fig. 32

a. Always press outer race when installing bearing.
b. Be careful not to remove plastic lock from inner race when installing bearing.
c. Charge bearing with new grease when outer race is not removed.

5) Install snap ring in its groove.

Make sure to install it firmly to groove.

6) Using OIL SEAL INSTALLER (927110000), press outer oil seal until it contacts circlip.

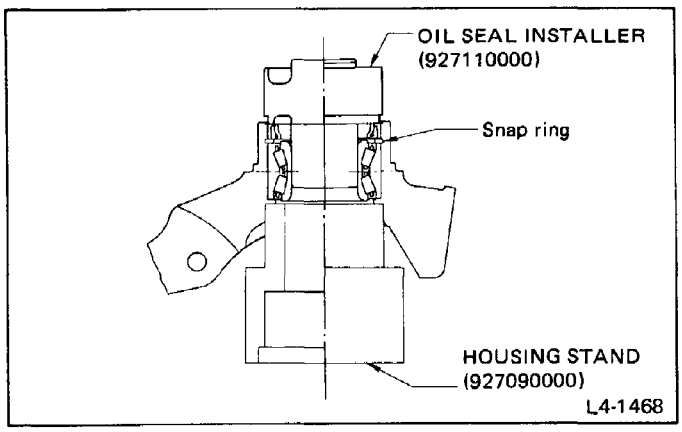

Fig. 33

7) Invert HOUSING STAND and housing.
8) Using OIL SEAL INSTALLER (927110000), press inner oil seal until it contacts the bottom of housing.
9) Apply sufficient grease to oil seal lip.

Specified grease
SHELL XSG-6459

a. If specified grease is not available, remove bearing grease and apply AutoRex A instead.
b. Do not mix different types of grease.

10) Install disc cover to housing using two bolts.

Tightening torque:
10 – 18 N·m (1.0 – 1.8 kg-m, 7 – 13 ft-lb)

11) Attach hub COMPL to HUB STAND (927080000) securely.
12) Clean dust or foreign particles from the polished surface of hub.
13) Using HUB INSTALLER (927120000), press bearing into hub by driving inner race.

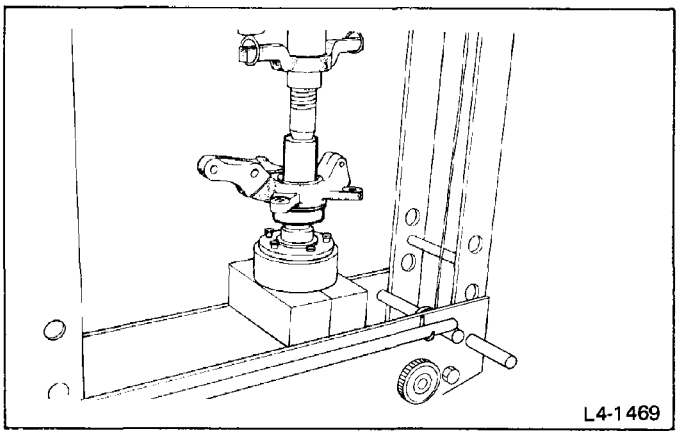

Fig. 34

14) Install transverse link ball joint to housing.

Tightening torque:
38 – 50 N·m (3.9 – 5.1 kg-m, 28 – 37 ft-lb)

15) Connect damper strut and housing using two bolts.

Tightening torque:
64 – 83 N·m (6.5 – 8.5 kg-m, 47 – 61 ft-lb)

Front Axle Shaft

Several kinds of front axle shaft ASSY are available. When replacing a single DOJ unit or axle shaft ASSY, select the correct one according to "SPECIFICATIONS AND SERVICE DATA".

REMOVAL

1) Disconnect ground cable from battery.
2) Apply parking brake.
3) Remove front wheel cap and cotter pin, and loosen castle nut and wheel nuts.
4) Jack up vehicle, support it with safety stands (rigid racks), and remove front tires and wheels.
5) Release parking brake.
6) Remove parking brake cable bracket from transverse link.
7) Drive out spring pin of DOJ.

Do not reuse spring pin.

8) Remove disc brake ASSY, and disconnect damper strut, tie-rod end and transverse link from housing. (Refer to "REMOVAL" of "Housing".)
9) Remove axle shaft from differential spindle along with housing.
10) Remove housing from axle shaft by using PULLER (926470000).

a. Be sure not to scratch boot when removing axle shaft ASSY.
b. Do not apply excessive force to differential case when removing axle shaft.

DISASSEMBLY

1) Straighten bent claw of larger end of DOJ boot.
2) Loosen band by means of screwdriver or pliers with care of not damaging boot.

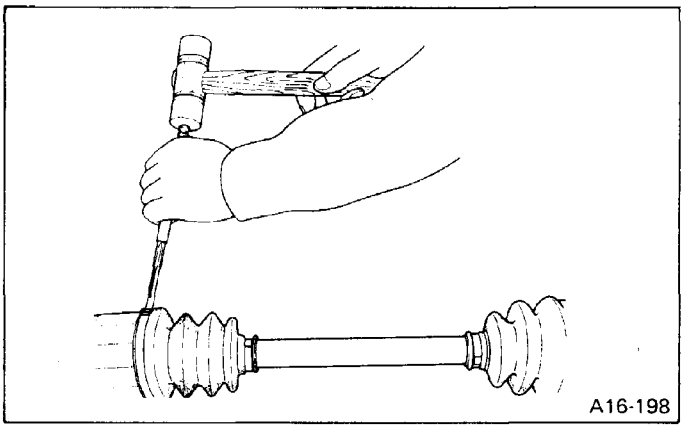

Fig. 35

3) Remove boot band on the small end of DOJ boot in the same manner.
4) Remove the larger end of DOJ boot from DOJ outer race.

5) Pry and remove round circlip located at the neck of DOJ outer race with a screwdriver.

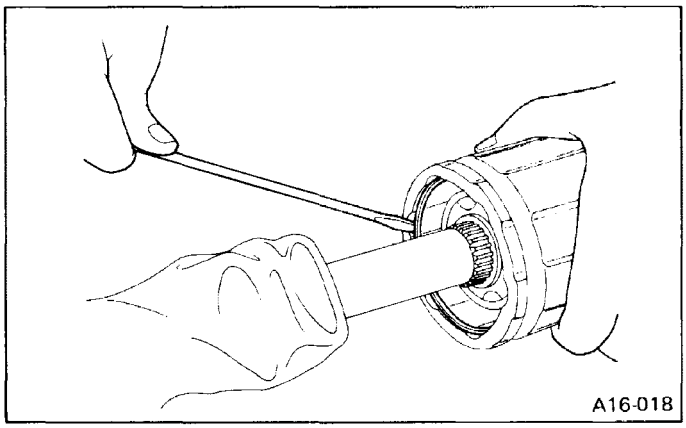

Fig. 36

6) Take out DOJ outer race from shaft ASSY.
7) Wipe off grease and take out balls and move cage to the boot side.

a. To remove the cage from the inner race, turn the cage by a half pitch to the track groove of the inner race and shift the cage.
b. Disassemble exercising care not to lose balls (6 pcs).
c. The grease is a special grease (grease for constant-velocity joint). Do not confuse with other greases.

8) Remove C-type snap ring, which fixes inner race to shaft, by using special pliers.
9) Take out DOJ inner race.
10) Take off DOJ cage from shaft and remove DOJ boot.

Be sure to wrap shaft splines with vinyl tape to prevent boot from scratches.

11) Remove BJ boot in the same procedure as steps 1) to 3).
12) Thus, disassembly of axle is completed, but BJ is unable to be disassembled.

INSPECTION

Check the removed parts for damage, wear, corrosion and etc. If faulty, repair or replace.
1) DOJ (Double Offset Joint)
Check seizure, corrosion, damage, wear and excessive play.
2) Shaft
Check excessive bending, twisting, damage and wear.
3) BJ (Bell Joint)
Check seizure, corrosion, damage and excessive play.
4) Boot
Check for wear, warping, breakage or scratches.
5) Grease
Check for discoloration or fluidity.

ASSEMBLY

Use specified grease.

Specified grease for constant velocity joint:
Molylex No. 2 (P/N 623029980)

1) Install BJ boot in specified position, and fill it with 60 to 70 g (2.12 to 2.47 oz) of specified grease.
2) Place DOJ boot at the center of shaft.

Be sure to wrap shaft splines with vinyl tape to prevent boot from scratches.

3) Insert DOJ cage onto shaft.

Insert the cage with the cut-out side facing the shaft end, since the cage has an orientation.

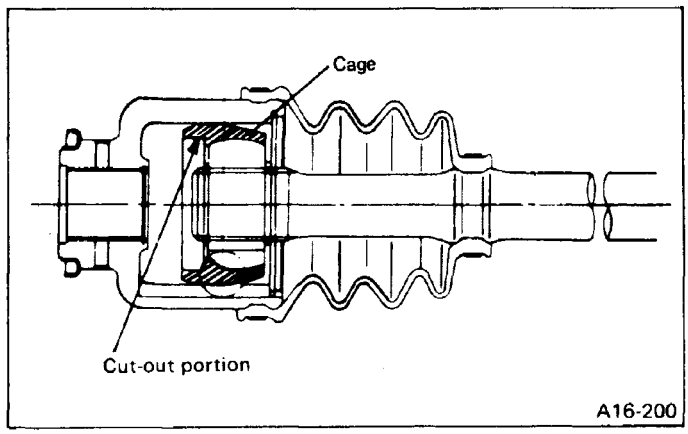

Fig. 37

4) Install DOJ inner race on shaft and fit C-type snap ring with special pliers.

Confirm that the C-type snap ring is completely fitted in the shaft groove.

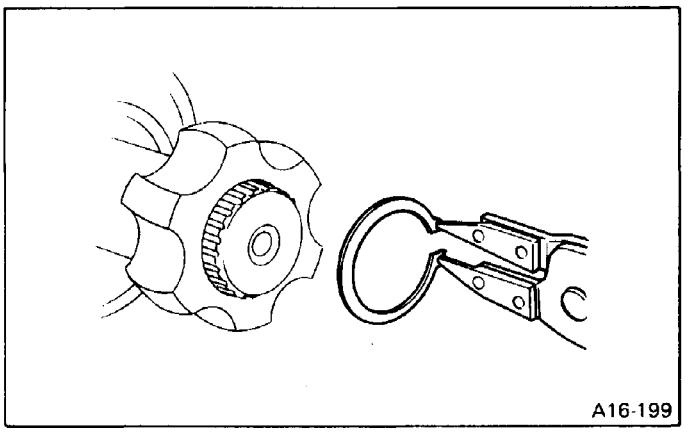

Fig. 38

5) Install cage, which was previously fitted, to inner race fixed upon shaft.

Fit the cage with the protruded part aligned with the track on the inner race and then turn by a half pitch.

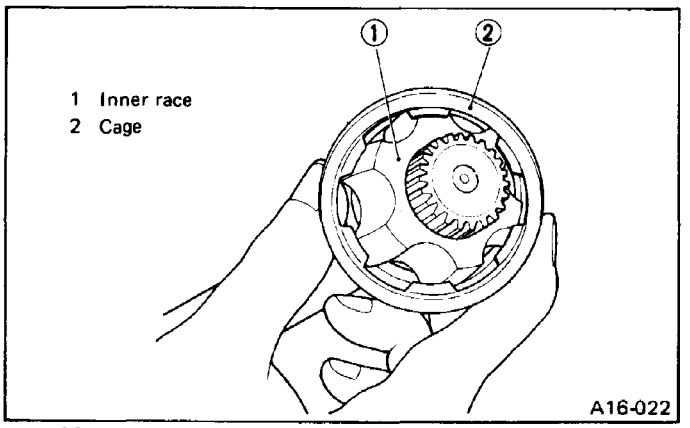

Fig. 39

6) Apply the specified grease 20 to 30 g (0.71 to 1.06 oz) on the cage pocket.

7) Insert six balls into the cage pocket.

8) Fill 20 to 30 g (0.71 to 1.06 oz) of specified grease into the interior of DOJ outer race.

9) Align the outer race track and ball positions and place in the part where shaft, inner race, cage and balls are previously installed, and then fit outer race.

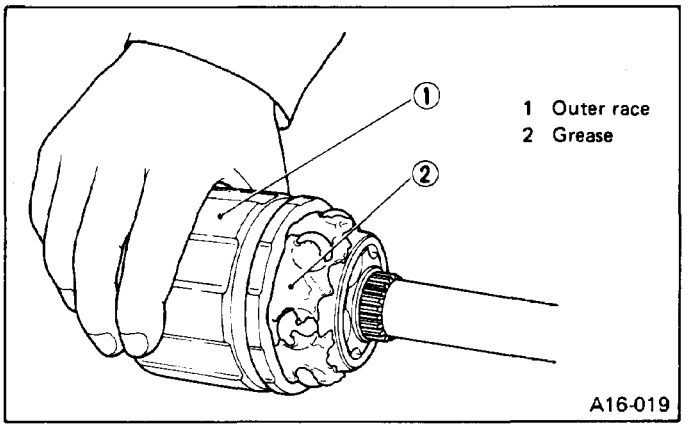

Fig. 40

10) Install circlip in the groove on DOJ outer race.

a. Assure that the balls, cage and inner race are completely fitted in the outer race of DOJ.
b. Exercise care not to place the matched position of circlip in the ball groove of outer race.
c. Pull the shaft lightly and assure that the circlip is completely fitted in the groove.

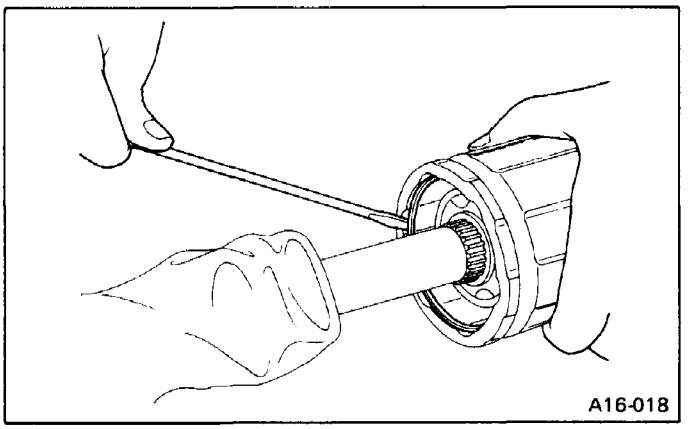

Fig. 41

11) Add 20 to 30 g (0.71 to 1.06 oz) of specified grease to the DOJ's interior.

12) Apply an even coat of the specified grease [20 to 30 g (0.71 to 1.06 oz)] to the entire inner surface of boot. Also apply grease to shaft.

13) Install DOJ boot taking care not to twist it.

a. The inside of the larger end of DOJ boot and the boot groove shall be cleaned so as to be free from grease and other substances.
b. When installing DOJ boot, position outer race of DOJ at center of its travel.

14) Put a band through the clip and wind twice in alignment with band groove of boot.

Use a new band.

15) Pinch the end of band with pliers. Hold the clip and tighten securely.

When tightening boot, exercise care so that the air within the boot is appropriate.

16) Tighten band by using BAND TIGHTENING TOOL (925091000).

a. Tighten band until it cannot be moved by hand.
b. Former BAND TIGHTENING TOOL (925090000) is interchangeable with this 925091000.

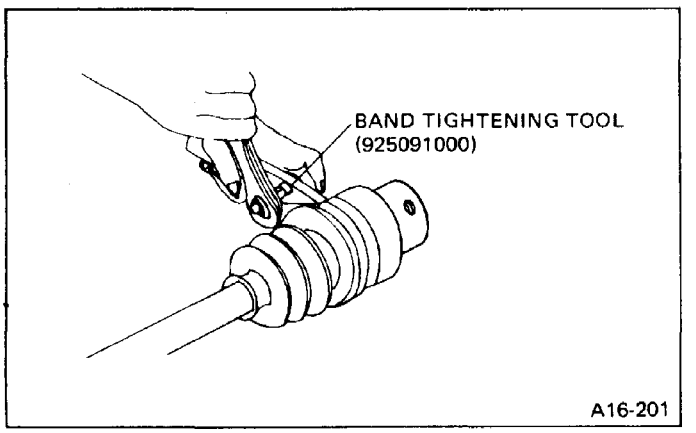

Fig. 42

17) Tap on the clip with the punch provided at the end of BAND TIGHTENING TOOL.

Tap to an extent that the boot underneath is not damaged.

18) Cut off band with an allowance of about 10 mm (0.39 in) left from the clip and bend this allowance over the clip.
19) Fix up boot on BJ in the same manner.

INSTALLATION (Except XT6)

1) Insert axle shaft into housing and attach spacer of INSTALLER (925130000 or 922431000) on outer bearing inner race taking care not to damage the oil seal lip.

2) Install transverse link ball joint to housing.

Tightening torque:
29 – 39 N·m (3.0 – 4.0 kg-m, 22 – 29 ft-lb)

3) Connect the rod of INSTALLER to the thread of axle shaft and turn the handle while holding the rod end by means of a spanner, thus axle shaft is pulled in.
4) Align the spring pin holes of DOJ and differential spindle.
5) Connect DOJ and differential spindle by driving spring pin in.

a. Make sure that the holes are aligned before driving the spring pin in.
b. When driving the spring pin, always use new one.

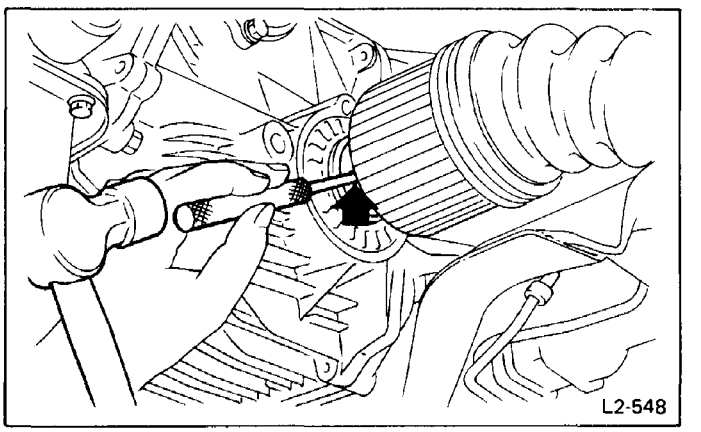

Fig. 43

6) Connect damper strut to housing, and tighten two bolts.

Tightening torque:
29 – 39 N·m (3.0 – 4.0 kg-m, 22 – 29 ft-lb)

7) Install disc cover on housing.

Tightening torque:
6 – 14 N·m (0.6 – 1.4 kg-m, 4.3 – 10.1 ft-lb)

8) Install hub & disc ASSY to axle shaft.

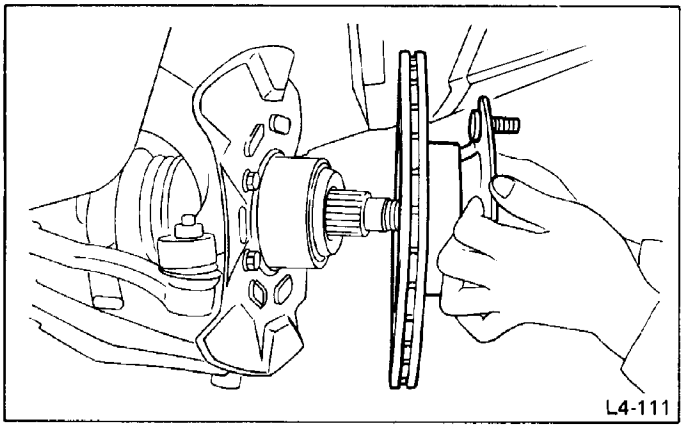

Fig. 44

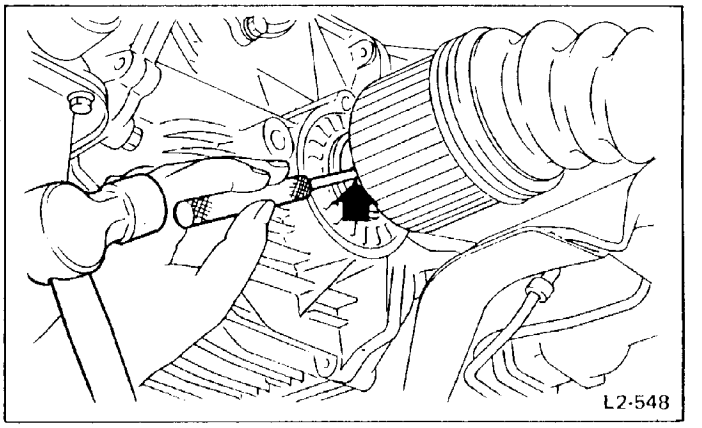

Fig. 45

9) Install or connect disc brake ASSY, parking brake cable, center piece, washer spring, axle nut, cotter pin, brake hose and tie rod end referring to "INSTALLATION" of "Housing".
10) Install wheels and tighten wheel nuts.
11) Install wheel caps in position.
12) Put down vehicle from rigid racks.
13) Connect ground cable with negative terminal of battery.

INSTALLATION (XT6)

1) Insert BJ (bell joint) into hub splines.

Be careful not to damage inner oil seal lip.

2) Using AXLE SHAFT INSTALLER (922431000) and EXTENSION (927130000), pull bell joint into place.

Do not hammer axle shaft when installing bell joint.

3) Install a washer on the threaded portion of BJ (bell joint) and temporarily tighten axle nut.
4) Align the spring pin holes of DOJ and differential spindle, then insert DOJ into differential spindle.

a. Make sure that the holes are aligned before driving the spring pin in.
b. When driving the spring pin, always use new one.

5) Install transverse link temporarily to crossmember by using a bolt and self-locking nut; then tighten self-locking nut which installs transverse link to cross member.

Torque (self-locking nut):
93 – 113 N·m (9.5 – 11.5 kg-m, 69 – 83 ft-lb)

Self-locking nut should be replaced with a new one whenever it is removed.

6) Install tie-rod end ball joint to the housing knuckle arm.

Torque (Castle nut):
25 – 29 N·m (2.5 – 3.0 kg-m, 28 – 22 ft-lb)

After tightening the nut to the specified torque, adjust groove on the nut and hole on the ball joint by retightening the nut from 0 to 60 degrees.

7) After then, install new cotter pin into the hole, and bend it firmly.
8) Engage brake caliper lever with parking brake cable.
9) Install the outer parking brake cable.
10) Install parking brake cable bracket to transverse link.
11) Pull parking brake lever.
12) Tighten axle nut.

Tightening torque:
196 N·m (20 kg-m, 145 ft-lb)

Before tightening axle nut, raise vehicle with a jack, remove wheel and apply parking brake. Do not tighten axle nut with wheels on the ground. Otherwise, bearing may be damaged.

13) After tightening axle nut, locate adjusting cap so that cotter pin can be driven into place while turning axle nut within 15°.
14) Drive cotter pin into place.
15) Spread cotter pin to lock axle nut.

Rear Axle (FWD)

The text describes the procedures for drum brake equipped vehicle. Take similar procedures as the above for disc brake equipped vehicle.

REMOVAL AND DISASSEMBLY

1) Apply parking brake, and loosen rear wheel nuts.
2) Jack up vehicle, support it with safety stands (rigid racks) and remove rear tires and wheels.
3) Pry brake drum cap by screwdriver off drum.
4) Flatten lock washer and loosen axle nut, then remove lock washer, washer and brake drum so as not to drop inner race of outer bearing.
Outer races of outer bearing and inner bearing, and oil seal can be removed together with drum.
5) Pry up spacer with a screwdriver and remove spacer and inner bearing inner race with a gear puller.

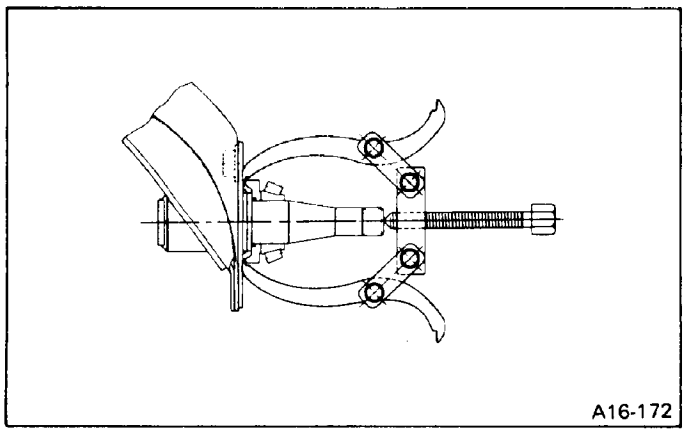

Fig. 46

6) Remove outer race of inner bearing from drum. Remove oil seal at this time.

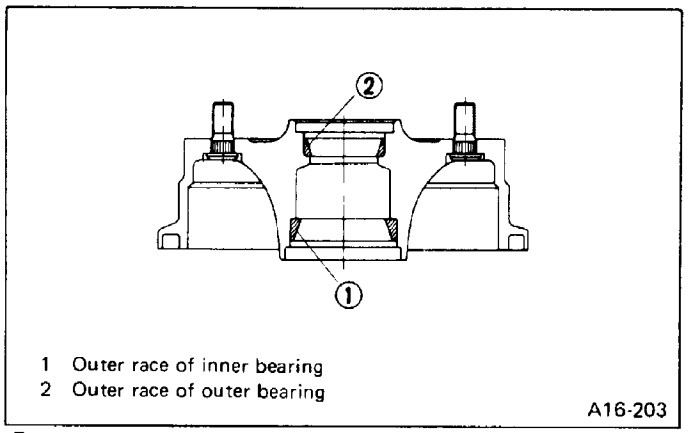

1 Outer race of inner bearing
2 Outer race of outer bearing

Fig. 47

7) Remove outer race of outer bearing from drum.

INSPECTION

Clean the removed parts and check them for wear, damage and corrosion. If faulty, repair or replace.

ASSEMBLY AND INSTALLATION

1) Press outer race of inner bearing into drum using TAPER ROLLER BEARING INSTALLER (925220000) and a press.

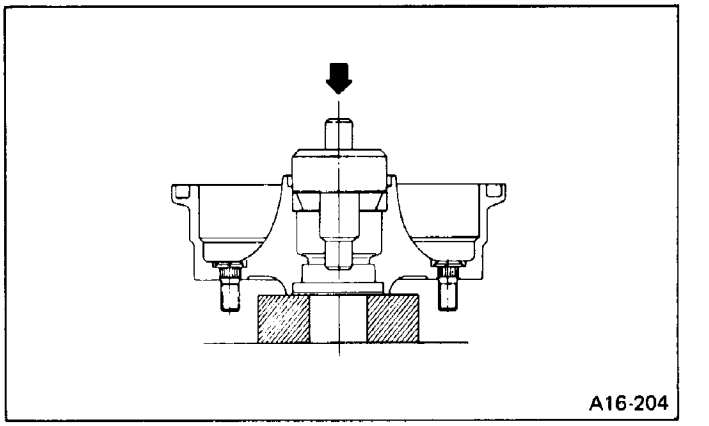

Fig. 48

2) Apply sufficient grease to oil seal lip. Install oil seal into drum until its outer end is flush with the drum surface.
3) Press outer race of outer bearing into drum using TAPER ROLLER BEARING INSTALLER (921130000) and a press.

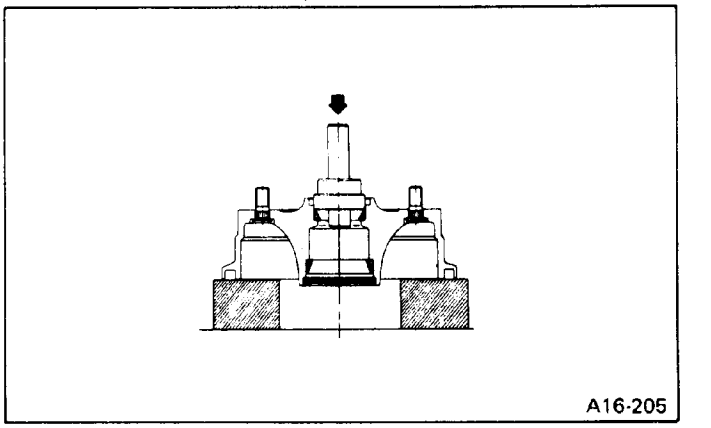

Fig. 49

4) Apply approximately 4 g (0.14 oz) of grease to inner bearing and 3 g (0.11 oz) to outer bearing.
Fill the boss of drum with approximately 30 g (1.06 oz) of grease.

5) Install spacer and inner race of inner bearing onto the spindle of trailing arm.

Stepped surface of the spacer must be faced toward the bearing.

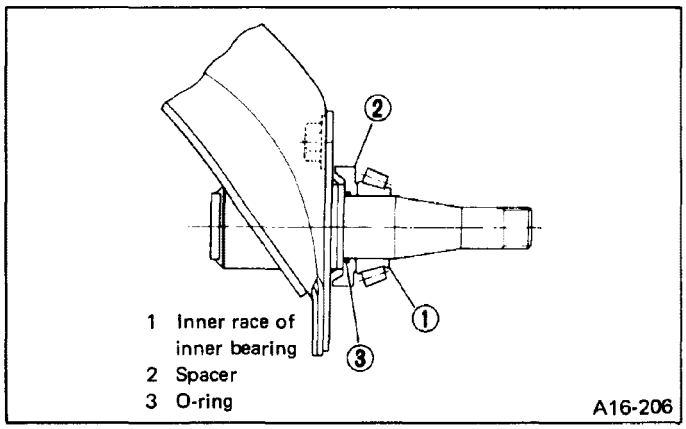

Fig. 50

6) Install drum, inner race of outer bearing, washer, lock washer and axle nut in this order onto the spindle.

Be sure to use new lock washer without fail.

ADJUSTING REAR WHEEL BEARING

1) Temporarily tighten axle nut with tightening torque of 49 N·m (5 kg-m, 36 ft-lb), and then turn drum back and forth alternately several times to properly seat bearing and ascertain bearing stability.

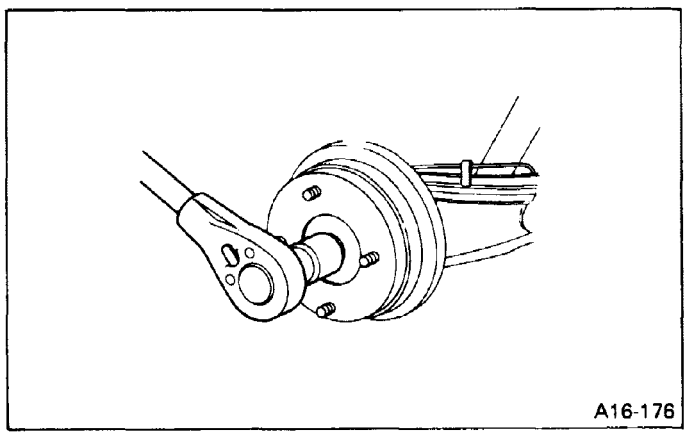

Fig. 51

2) Turn back nut 1/8 to 1/10 in order to obtain correct starting torque. Measure the starting force as shown.

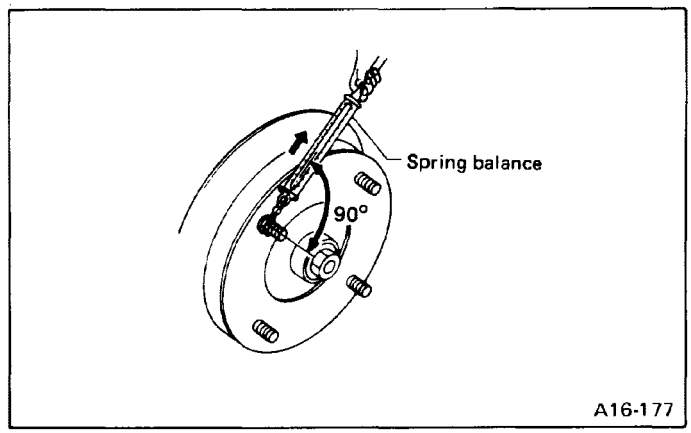

Fig. 52

Starting force when measured at hub bolt:
8.34 – 14.22 N (0.85 – 1.45 kg, 1.87 – 3.20 lb)

Make sure there is no free play in the bearing.

3) Bend lock washer.

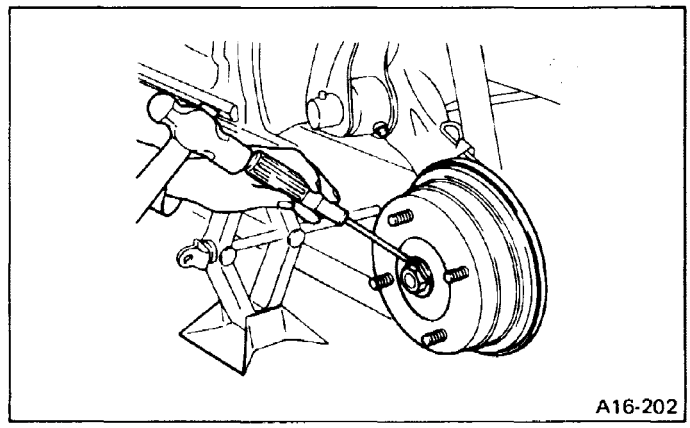

Fig. 53

4) After installing O-ring to drum cap, install cap to brake drum by lightly tapping with plastic hammer.

a. Do not use steel hammer etc.
b. Be sure to use new O-ring.

Rear Axle (4WD)

For 4WD model, dismount inner arm of trailing arm from vehicle body before removing and installing rear axle.

The text describes the procedures for disc brake equipped vehicle.

REMOVAL

1) Apply parking brake.
2) Remove rear wheel cap and cotter pin, and loosen castle nut and wheel nuts.
3) Detach shock absorber from inner arm.
4) Loosen lock bolts of crossmember outer bush.
5) Jack up vehicle, support it with safety stand (rigid racks).
6) Remove rear wheels.
7) Drive out spring pins of DOJ and BJ by using a steel rod of 6 mm (0.24 in) diameter.
8) Remove BJ from spindle of trailing arm with trailing arm lowered fully, then remove DOJ from differential spindle.

Disassembly and reassembly procedure of rear drive shaft is the same as that of front drive shaft.

9) Remove castle nut loosened previously and brake disc.
10) Disconnect brake pipe from brake hose at inner arm bracket.

Fit air breather cap onto end of brake hose to prevent brake fluid from pouring out.

11) Remove brake ASSY from trailing arm.
12) Remove bolt holding inner bush of inner arm.
13) Remove three bolts which connect inner arm and outer arm, and take out inner arm.
14) Vise inner arm, and straighten staked portion of ring nut, then remove ring nut by using special tool WRENCH (925550000).
15) Extract spindle inwardly by lightly tapping it from outside with a plastic hammer.
16) Remove outer oil seal from inner arm housing.
17) Insert spindle from out side of housing, and extract outer race of inner bearing, spacer and outer bearing by pushing inner race of outer bearing through the spindle by a press.
18) Remove inner race of inner bearing from spindle by using a press.

INSPECTION

Check the removed parts for wear and damage.
If defective, replace with a new one.

a. If a bearing is faulty, replace it as the bearing set.
b. Be sure to replace oil seal at every overhaul.

INSTALLATION

1) Install inner race of inner bearing onto the spindle, and install outer races of inner bearing and outer bearing and spacer by using press.

Don't confuse orientation of bearing outer races.

2) Apply grease of 20 to 30 g (0.71 to 1.06 oz) to bearing outer race in housing.
3) Insert spindle from inside, and press inner race of outer bearing from outside by using a pipe of 35 mm (1.38 in) in inner diameter while tapping it with a hammer.

Apply grease sufficiently on the inner and outer bearing area.

4) Install ring nut to housing by using WRENCH (925550000).

Tightening torque:
172 – 221 N·m (17.5 – 22.5 kg-m, 127 – 163 ft-lb)

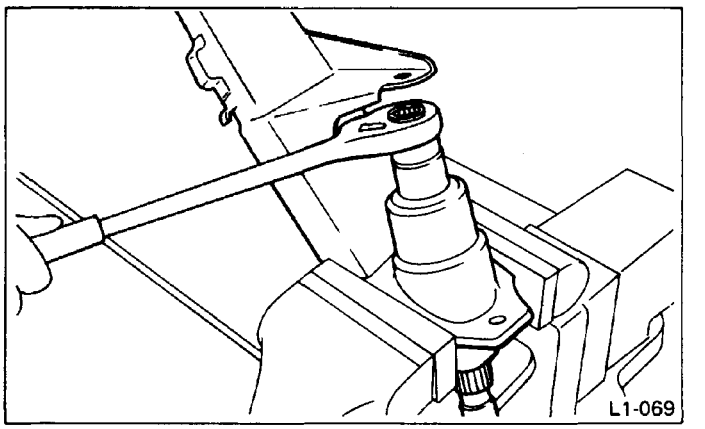

Fig. 54

5) Lock the ring nut by staking a point on the housing surface facing the ring nut groove.

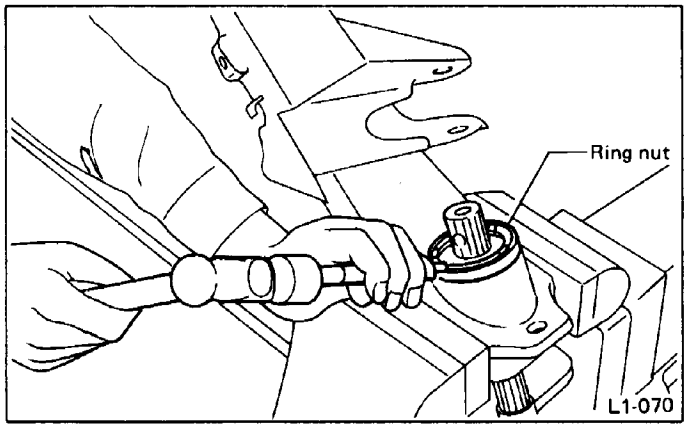

Fig. 55

6) Install outer oil seal by using special tool INSTALLER (925530000).

Be sure to renew the oil seal.

7) Install inner oil seal by using special tool INSTALLER (925530000).

Be sure to renew the oil seal.

8) Mount inner arm to vehicle body.
9) Install rear brake ASSY to inner arm, and connect brake pipes etc.

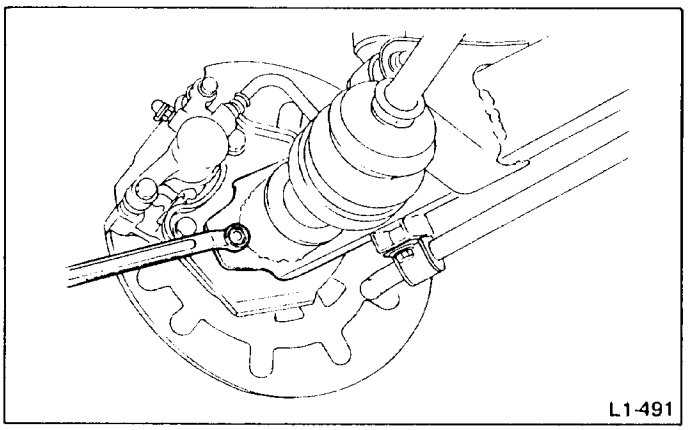

Fig. 56

Tightening torque (Back plate):
46 – 58 N·m (4.7 – 5.9 kg-m, 34 – 43 ft-lb)

10) Connect brake hose and brake pipe.

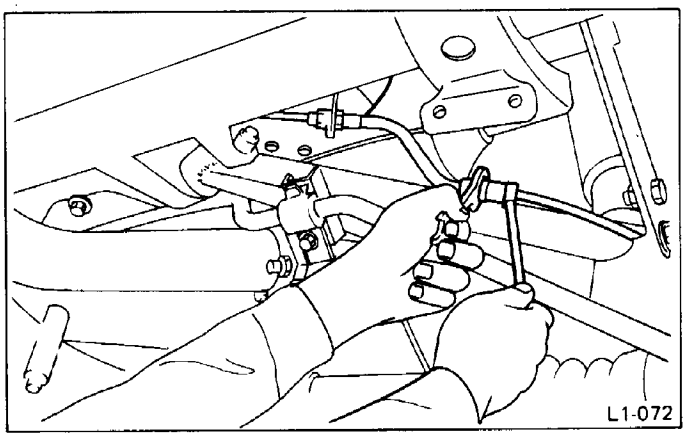

Fig. 57

11) Temporarily fit brake disc, center piece, washer spring and castle nut to spindle, in this order.

a. Play on spindle experienced, when mounting brake disc is not a fault.
b. Don't confuse orientation of washer spring.

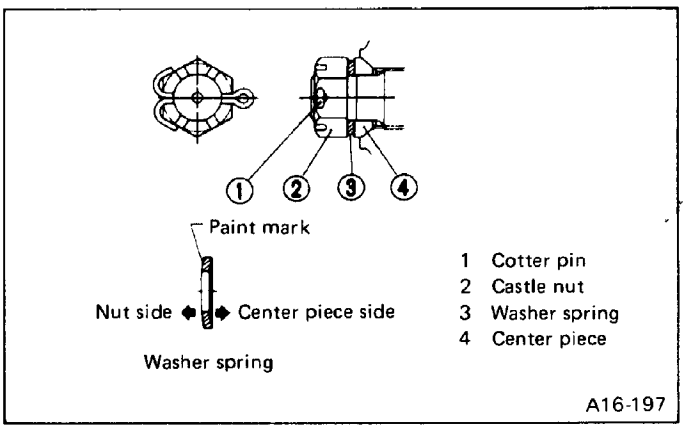

Fig. 58

12) Bleed brake system.

a. Before bleeding brake system, check pedal play and brake fluid level in reserve tank.
b. Bleed air from four wheels without fail.

13) Tighten castle nut, insert cotter pin and bend it firmly with foot brake applied to lock the wheel and axle.

Tightening torque:
196 N·m (20 kg-m, 145 ft-lb)

After tightening castle nut to the specified torque, tighten further within 30° to align holes on nut and spindle.

14) Install packing to differential spindle.
15) Engage DOJ of rear drive shaft to differential spindle.

a. When mounting, mate the spline teeth properly so that the spring pin holes of DOJ and spindle will align.
b. When mounting the rear drive shaft ASSY, take care not to mount the DOJ and BJ oppositely.

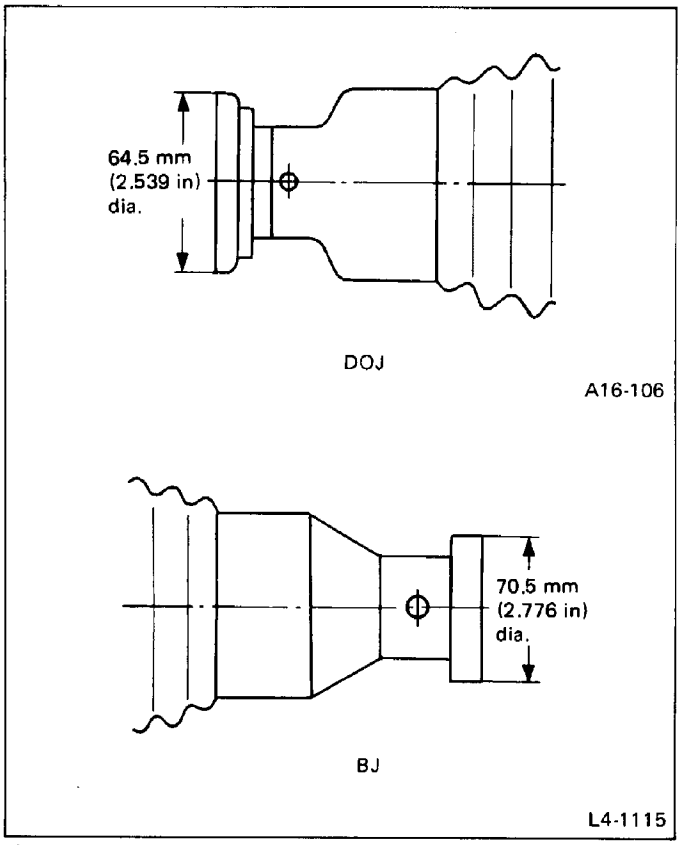

Fig. 59

16) Install packing to rear spindle, and mount BJ of rear drive shaft onto rear spindle with trailing arm lowered all the way.

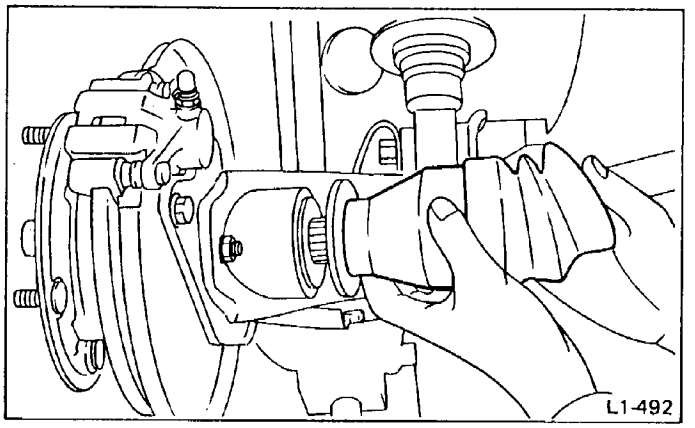

Fig. 60

17) Drive spring pins into DOJ and BJ respectively.

a. Before driving in the spring pin, confirm alignment of the holes.
b. Be sure to use new spring pin.

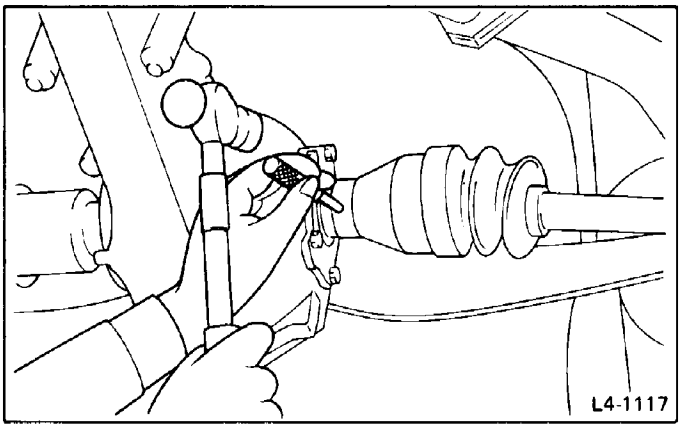

Fig. 61

18) Install wheels, outer arms, etc.
19) Lower vehicle to the ground, and install lower end of shock absorber to inner arm.

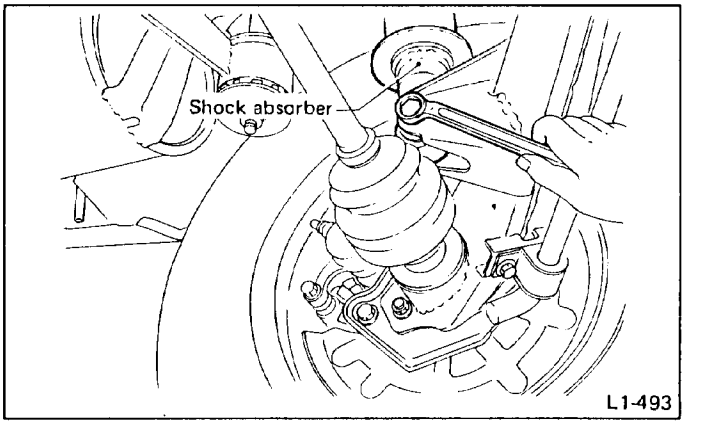

Fig. 62

Tightening torque:
88 – 118 N·m (9 – 12 kg-m, 65 – 87 ft-lb)

20) Check and adjust rear vehicle hight and rear wheel alignment.

Wheel and Tire

See "SPECIFICATIONS AND SERVICE DATA" for:
- Combination of tire and wheel
- Tire inflation pressure

Wheel Cap

HALF CAP

Removal

Pry off the half cap with a screwdriver inserted into openings in the cap.

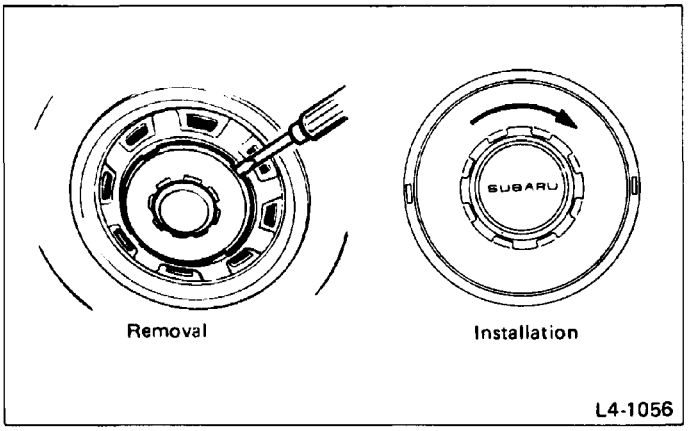

Fig. 63

Installation

Attach the half cap to the disc wheel. Using the palm of your hand, turn it clockwise until it stops. (The cap will stop when turned approximately 20° after the pawl engages the nut.)

FULL CAP

Removal

Pry off the full cap with a screwdriver inserted between openings in the cap.

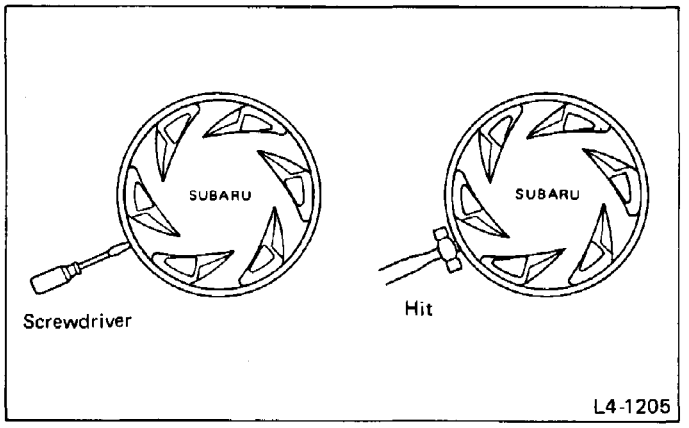

Fig. 64

Installation

Align the valve hole in the wheel cap with the valve on the wheel and secure the wheel cap by tapping four points (shown in Figure) by hand.

CENTER CAP (XT6)

Removal

Insert a screwdriver into access hole and pry center cap.

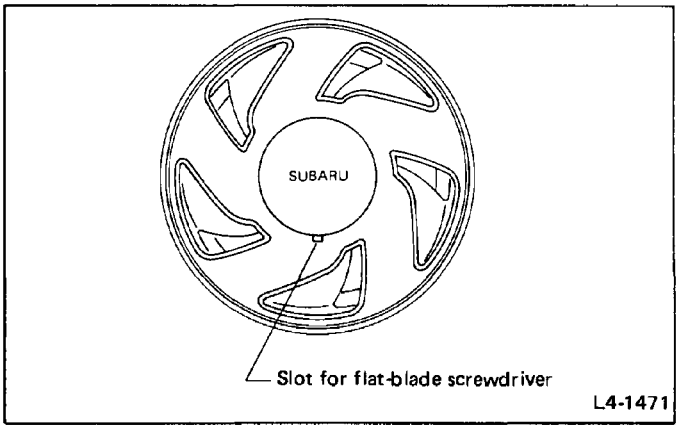

Fig. 65

Installation

After aligning notch in center cap with that of aluminum wheel, push center cap into place. When not properly aligned, center cap cannot be installed properly because its protrusion rides over the wheel.

Wheel and Tire

1) Deformation or damage on the rim can cause air leakage. Check the rim flange for deformation, crack, or damage, and repair or replace as necessary.
2) Take stone, glass, nail etc. off the tread groove.
3) Replace tire:
   - when large crack on side wall, damage or crack on tread is found.
   - when the "tread wear indicator" appears as a solid band across the tread.

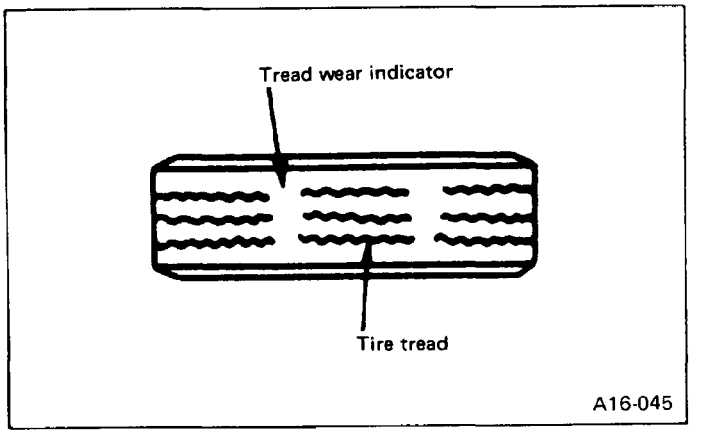

Fig. 66

When replacing a tire, make sure to use only the same size, construction and load range as originally installed. Avoid mixing radial, belted bias or bias tires on the vehicle.

Aluminum Wheel

INSPECTION

Inspection for aluminum wheels is basically the same as the one for steel wheels. However, check the rim flange for cracks or damage, and replace (not repair) aluminum wheel if air leakage is found.

PRECAUTIONS

Aluminum wheels are easily scratched. To maintain their appearance and safety, observe the following:

1) Do not damage aluminum wheels during removal, disassembly, installation, wheel balancing, etc. After removing aluminum wheels, place them on a rubber mat, etc.

2) While vehicle is being driven, be careful not to ride over sharp obstacles or allow aluminum wheels to contact the shoulder of the road.

3) When installing tire chain, be sure to install it properly not to have a slack; otherwise it may hit wheel while driving.

4) When washing aluminum wheel, use neutral synthetic detergent and water. Avoid using the cleanser including abrasive, hard brushes or an automatic car washer.

Wheel Balancing

1) Proper wheel balance may be lost if the tire is repaired or if it wears. Check the tire for dynamic balance, and repair as necessary.

2) To check for dynamic balance, use a dynamic balancer. Drive in the balance weight on both the top and rear sides of the rim.

3) Some types of balancer can cause damage to the wheel. Use an appropriate balancer when adjusting the wheel balance.

4) Use genuine balance weights.

Parts No. for steel wheel	Weight g (oz)	Parts No. for aluminum wheel
723141010	10 (0.35)	23141GA470
723141020	20 (0.71)	23141GA490
723141030	30 (1.06)	23141GA510
723141040	40 (1.41)	23141GA530
723141050	50 (1.76)	23141GA550
723141060	60 (2.12)	23141GA570
723141070	5 (0.18)	23141GA460
723141080	15 (0.53)	23141GA480
723141090	25 (0.88)	23141GA500
723141100	35 (1.23)	23141GA520
723141110	45 (1.59)	23141GA540
723141220	55 (1.94)	

Allowable dynamic unbalance:
6 g (0.21 oz) at rim flange

Installation of Wheel Assembly to vehicle

1) Attach the wheel to the hub by aligning the wheel bolt hole with the hub bolt.

2) Temporarily attach the wheel nuts to the hub bolts.
(In the case of aluminum wheel, use SUBARU genuine wheel nut for aluminum wheel.)

3) Manually tighten the nuts making sure the wheel hub hole is aligned correctly to the guide portion of hub.

4) Tighten the wheel nuts in a diagonal selection to the specified torque. Use a wheel nut wrench.

Wheel nut tightening torque:
78 – 98 N·m (8 – 10 kg-m, 58 – 72 ft-lb)

a. Tighten the wheel nuts in two or three steps by gradually increasing the torque and working diagonally, until the specified torque is reached. For drum brake models, excess tightening of wheel nuts may cause wheels to "judder".
b. Do not depress the wrench with a foot; Always use both hands when tightening.
c. Make sure the bolt, nut and the nut seating surface of the wheel are free from oils.

5) If a wheel was removed for replacement or for repair of a puncture, retighten the wheel nuts to the specified torque after running 1,000 km (600 miles).

Tire Rotation

If tires are maintained at the same positions for a long period of time, uneven wear results. Therefore, they should be pediodically rotated.
This lengthens service life of tires.

a. When rotating tires, replace unevenly worn or damaged tires with new ones.
b. Since "T-type" tire for temporary use is prepared as a spare tire, tire rotation is as follows.

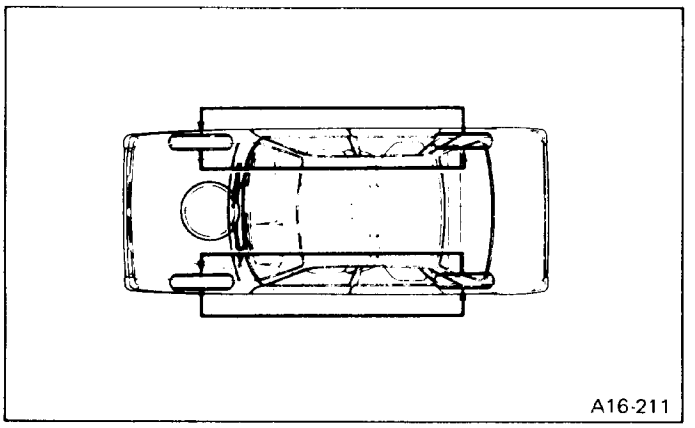

Fig. 67

"T-type" Tire

"T-type" tire for temporary use is prepared as a spare tire.

a. Keep the inflation pressure at 412 kPa (4.2 kg/cm^2, 60 psi) at all times.
b. When the wear indicator appears on the tread surface, replace the tire with a new one.
c. Do not use a tire chain with the "T-type" tire. Because of the smaller tire size, a tire chain will not fit properly and will result in damage to the vehicle and the tire.
d. When using a T-type tire:
- **Do not drive at a speed greater than 80 km/h (50 MPH).**
- **Drive as slowly as possible and avoid running over bumps.**
- **Do not drive with 4WD engaged.**
- **Replace it with a conventional tire as soon as possible since this "T-type" tire is only for temporary use.**

STEERING SYSTEM

4-3

SUBARU

1988

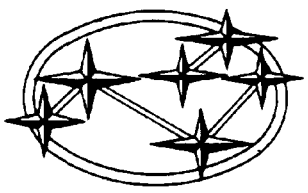

	Page
MECHANISM AND FUNCTION	2
SPECIFICATIONS AND SERVICE DATA	10
COMPONENT PARTS	13
SERVICE PROCEDURE	18
Steering Column	18
Steering Gearbox (Manual Steering System)	31
Steering Gearbox (Power Steering System)	41
Control Valve (Power Steering Gearbox)	52
Oil Pump (Power Steering System)	60
Fluid Line (Power Steering System)	70
Motor Pump & Power Controller	75
TROUBLESHOOTING	83

MECHANISM AND FUNCTION

VGR (Variable Gear Ratio) Gearbox

The variable gear ratio (VGR) gearbox is adopted on some manual steering models to reduce steering effort when making a full turn. This VGR gearbox adopts different rack tooth shapes between the straight-ahead position and the fully turned position. This varies the pitch circle diameter of the pinion which engages with the rack teeth so as to provide a solid steering feel when steering in the straight ahead position and a light steering feel during turns.

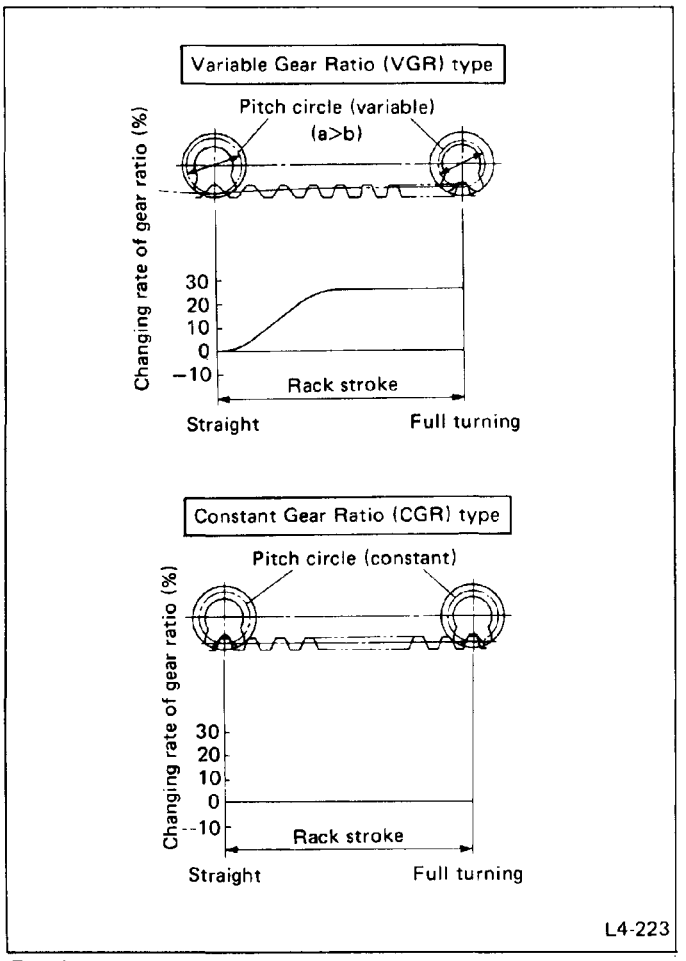

Fig. 1

The gear ratio is approx. 20 in the straight ahead position and approx. 25 in the full turn position.

Steering Column

The steering column is a tilt and telescopic type in which the position of the steering wheel can be adjusted up and down and back and forth. For better control and visibility, the service switches are arranged on a control wing overhanging the steering column. The control wing can tilt up and down and moves back and forth with the steering column. In addition, the combination meter moves up and down as a unit with the steering column.

Further, a pop-up mechanism with a memory is provided. Operating the pop-up knob permits the steering wheel to be popped up higher than the uppermost tilt position. The steering wheel returns to its original position when pulled down.

A CYBRID power steering sensor system is located on the lower part of the steering column.

TELESCOPIC CONSTRUCTION

When the telescopic lever on the steering wheel spoke is turned, the lock shaft inside the telescopic shaft moves in axial direction by thread lead. This causes the lock key to be released from or pressed against the steering shaft, so that the position of the steering wheel is axially adjusted or secured. It is adjustable up to 35 mm (1.38 in) with reference to the standard position.

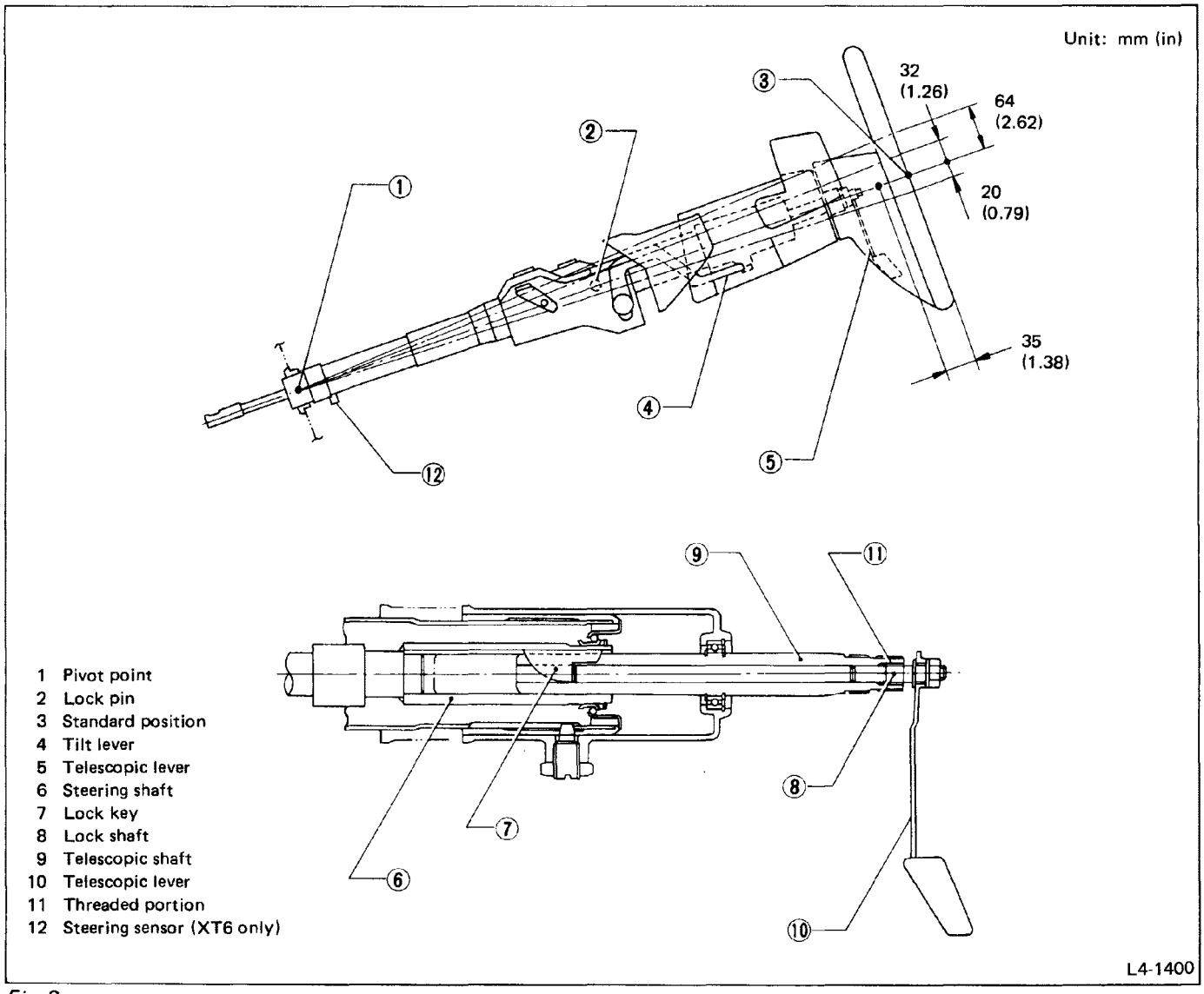

Fig. 2

TILT AND POP-UP CONSTRUCTION

The steering column is designed so that it can be either raised or lowered. The pivot point is at the flexible supporting portion to the body, at the lower end of the steering column. This permits the steering wheel to be adjusted 32 mm (1.26 in) upwards and 20 mm (0.79 in) downwards. By operating the tilt lever, the tilt bracket on the steering column is loosened or tightened allowing the steering wheel to be adjusted or secured.

Further, when the knob on the instrument panel is pulled, the lock pin connected to the knob with a cable is pulled out of the fit hole in the column inner bracket and the balance spring built into the column forces the steering wheel to pop up 64 mm (2.52 in) above the standard position. And then steering column locks at original position when steering wheel is pulled down.

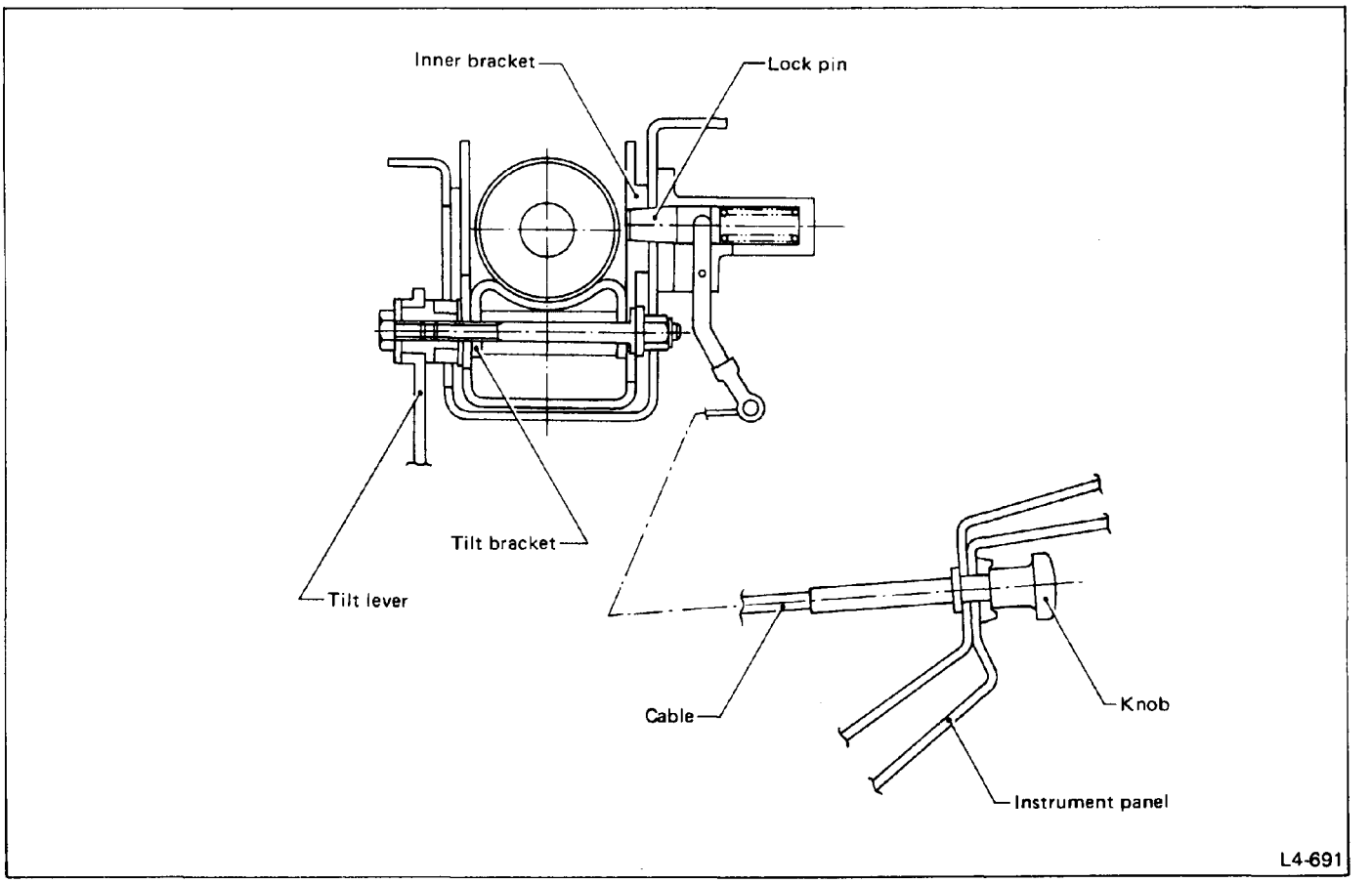

Fig. 3

Electronic- Controlled Moter Drive Power Steering

System Configuration

The electronic-controlled motor drive power steering system detects both car speed and frequency of steering operation. It activates the motor to supply the required amount of oil to the gear box through a command from the controller and provides "assist" force in relation to car speed.

In other words, this system is a car-speed sensing type which reduces "assist" force as car speed increases. It automatically selects four driving modes according to average car speed and frequency of steering operation.

These modes include high-speed driving, suburban driving, winding-road driving and city-driving. The motor will not activate when not steering at car speeds below 10 km/h (6 MPH).

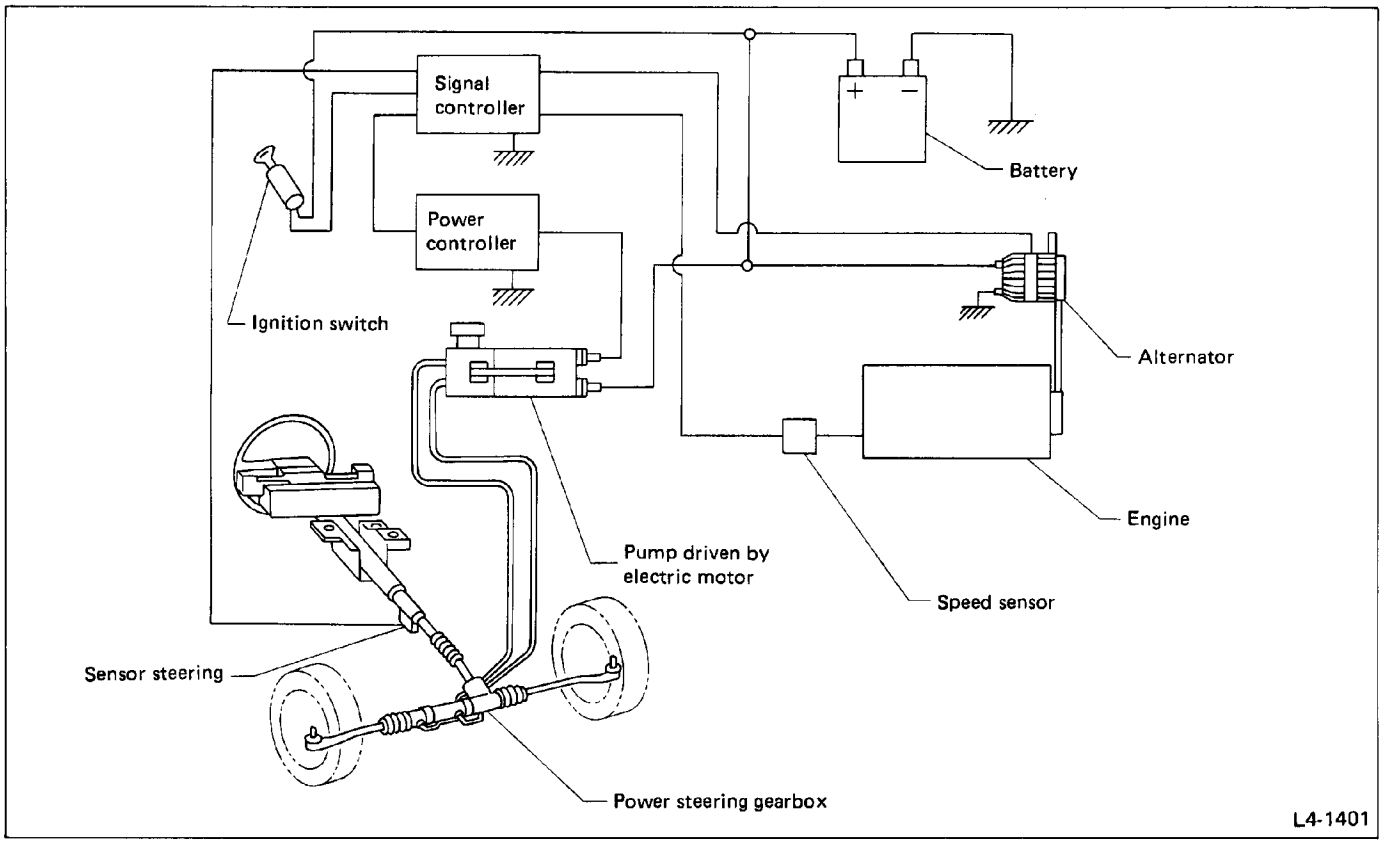

Fig. 4

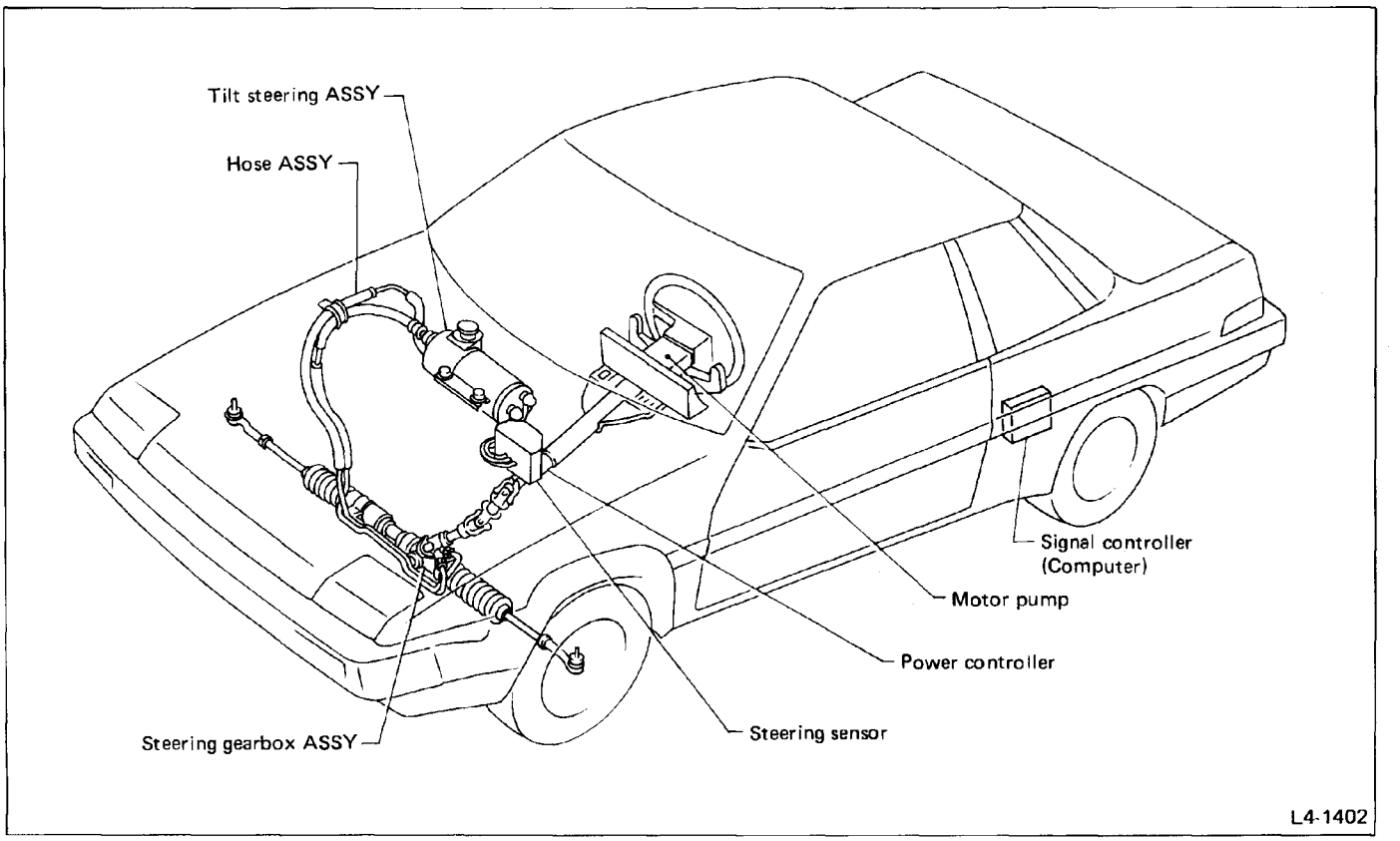

Fig. 5

Electronic Control Logic Configuration

The electronic control logic configuration of the electronic-controlled motor drive power steering system included both an initial diagnostic function and a normal processing function to monitor input and output signals transmitted by various parts. It includes a self-diagnosis function by which warning lamps are activated to indicate a problem. It also has a self-check function. Malfunctioning systems can be determined by the operation (blinking) of the warning lamp in the "check" mode.

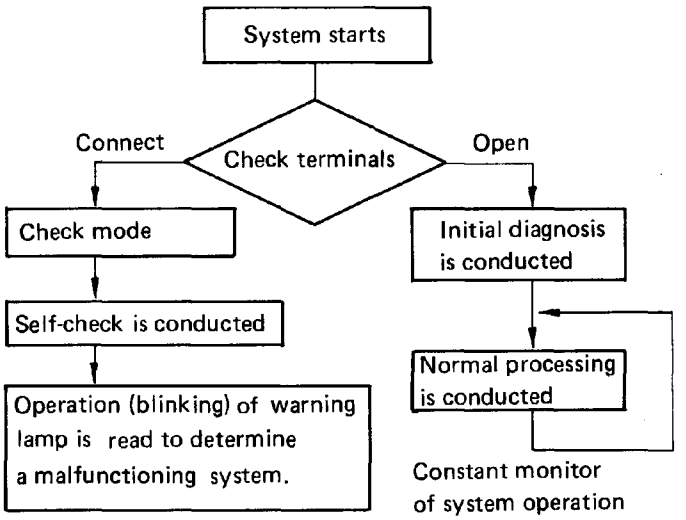

1) Initial diagnosis

In the initial diagnosis mode, current flowing through the warning lamp system, engine signal system and electric motor system is checked.

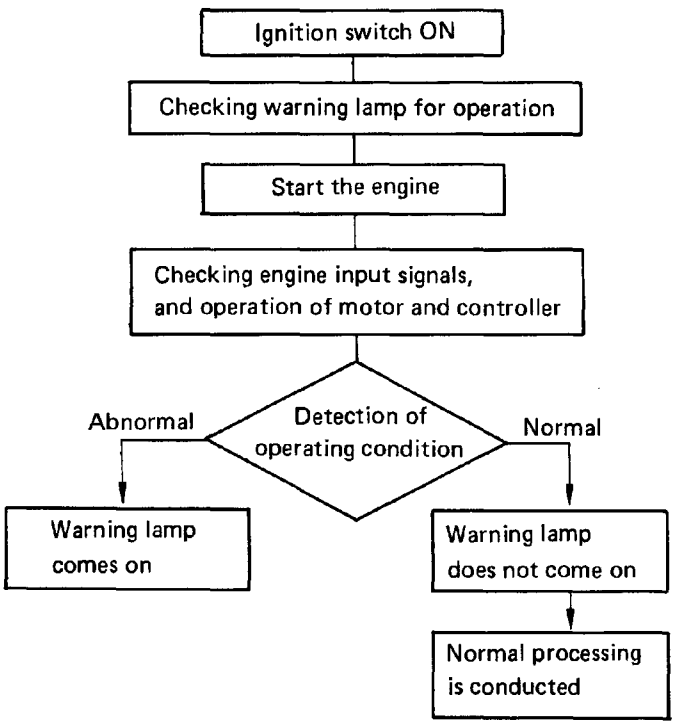

2) Normal processing

Upon completion of the initial diagnosis, normal processing controls steering in response to car speed and steering frequency.

(1) Diagnosis and fail-safe function

The operation of the signal controller, power controller, signal system and motor power supply is monitored at all times. If a problem occurs, the warning lamp (located in the combination meter) comes on to warn the driver. The fail-safe function activates, depending on the type of problem, and current flow to the motor is controlled to maintain proper steering.

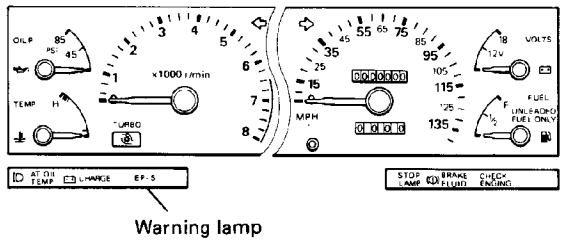

L4-1403

Fig. 6

(2) The following functional checks are conducted constantly during normal processing.

① When current in excess of 100 A flows to the motor for more than 10 seconds, the warning lamp comes on. "Duty" will then decrease to "0."

② When power supply greater than 9 V continues for at least 1 second, the warning lamp comes on. "Duty*1" will gradually decrease. When the normal power supply is restored, the warning lamp goes out. "Duty" will then be controlled.

③ When the engine stops, the warning lamp comes on. "Duty*1" will then gradually decrease. After restarting, the warning lamp goes out. "Duty" will be controlled again.

④ If no pulses are emitted when speed exceeds 25 km/h (16 MPH), the car-speed sensor system will register a "malfunction". The steering force immediately before the malfunction is maintained.

*1: Refers to a "relaxation" function (when is OFF).

(3) Relaxation function for changes in driving modes "Duty" differs with driving modes. If "Duty" changes abruptly in response to a change in driving mode, a shock is felt on the steering wheel. To prevent this, "Duty" is gradually decreased by 1 degree every 0.1 seconds*2.

(4) Assist control function

① Car speed greater than 10 km/h (6 MPH)

"Duty" is determined by both car speed and driving mode.

② Car speed less than 10 km/h (6 MPH)

When a steering pulse is entered, "Duty" will be 100%. If no pulse (for steering) is entered thereafter, "Duty" will decrease gradually.

(5) Relaxation function (when is OFF)

A great shock will be felt on the steering wheel if "Duty" is abruptly decreased to "0". The "Duty" is decreased by 1 degree every 0.5 seconds*2.

*2: 1 deg. = (2.5 to 3.5%)

3) Other functions

(1) Sub-fan control

When the steering wheel is turned very quickly at speeds below 10 km/h (6 MPH), the sub fan is turns OFF.

When speed increases to 10 km/h (6 MPH) and the steering wheel is turned slowly, the sub fan comes ON again.

(2) "Runaway" detection function

When the microcomputer runs away of if the internal power supply drops below the specified voltage, the microcomputer will reset*3.

*3: Refers to restoration of the microcomputer to a state in which the power is initially turned ON.

System Check Mode

1) Self-check procedures

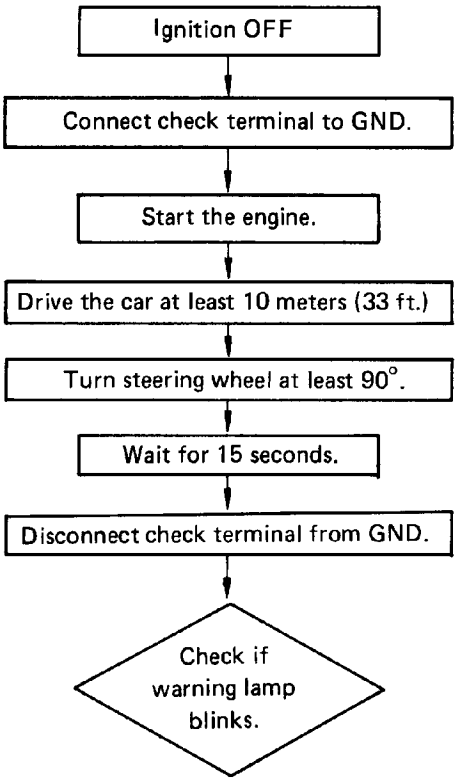

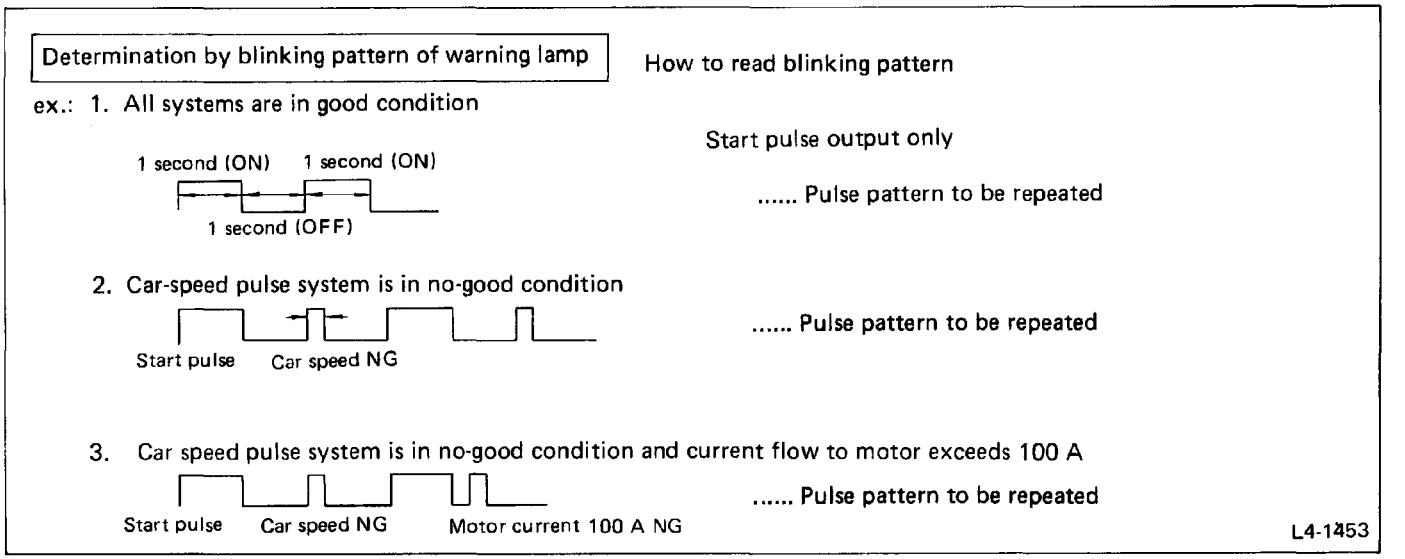

Fig. 7

Diagnostic items in the check mode

Item to check	Description	Operation pattern of warning lamp	Flowchart
Engine input system	No signal is transmitted from EGI control unit	Does not come on	Refer to 6-3.
Car-speed pulse system	Car-speed signal less than 5 pulses		
Steering pulse system	Break in temperature sensor circuit		
Harness system (Temperature sensor operation)	Break in heater drive circuit		
Harness system (Heater drive circuit operation)	Motor current less than 5 A (Motor does not rotate)		
Motor current	Current flow to motor greater than 100 A for at least 10 seconds		
Motor current	Signal-controller power supply below 9 V for at least 1 second.		
Power supply		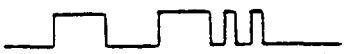	
Power controller	Inability to control		
	Systems are in good condition		

Construction

1) Steering sensor

This sensor receives a pulse signal corresponding to the steering operation. It is constructed with a slit plate placed between the photo couplers. The slit plate rotates as a unit with the column shaft. The sensor is located at the bottom of the column shaft, on the inside of the toe-board.

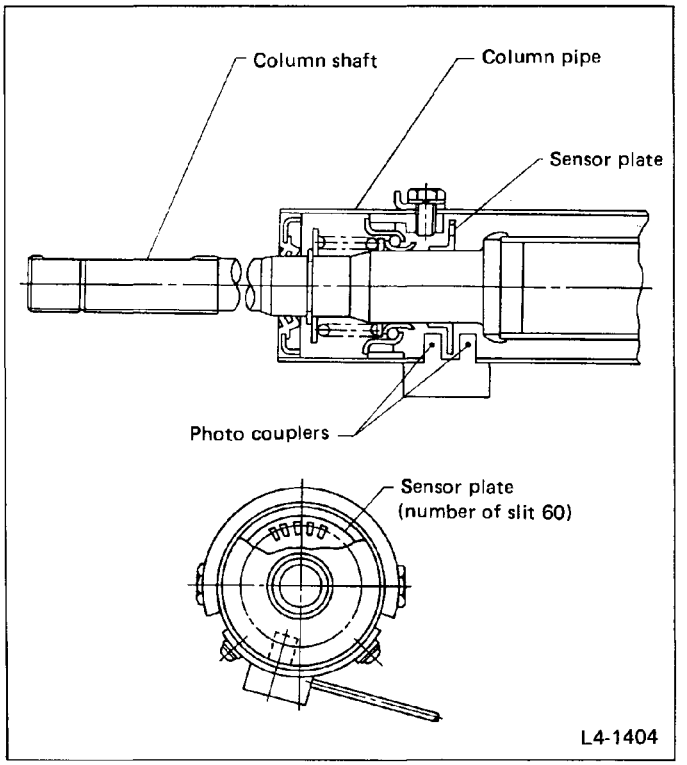

Fig. 8

2) Motor pump ASSY

The motor pump ASSY is located on the duct COMPL. in the engine compartment. An electrical motor rotates the oil pump in place of the engine-drive unit. With this motor ASSY, high viscosity steering fluid is quickly warmed in cold weather below −20°C (−4°F) immediately after the engine starts. As a result, proper steering performance is maintained.

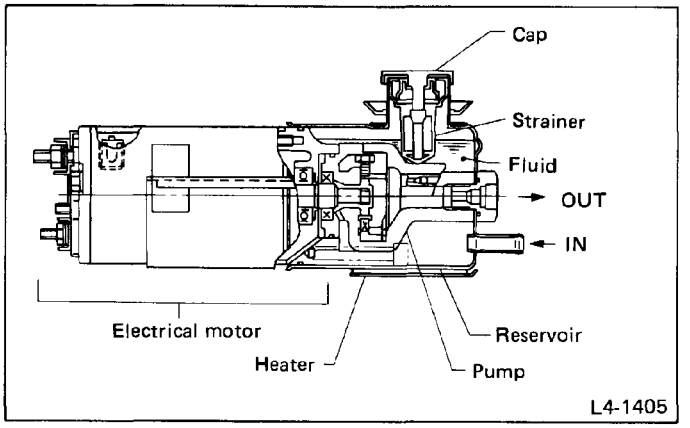

Fig. 9

3) Power controller

This controller regulates current flow to the motor pump ASSY in response to instructions emitted by the signal controller. It is located by the motor pump on the duct COMPL. in the engine compartment.

It is equipped with a current sensor, which monitors current flow through the power controller, a unit which prevents reception of external noise (radio noise, etc.), and a power transistor to control current flow.

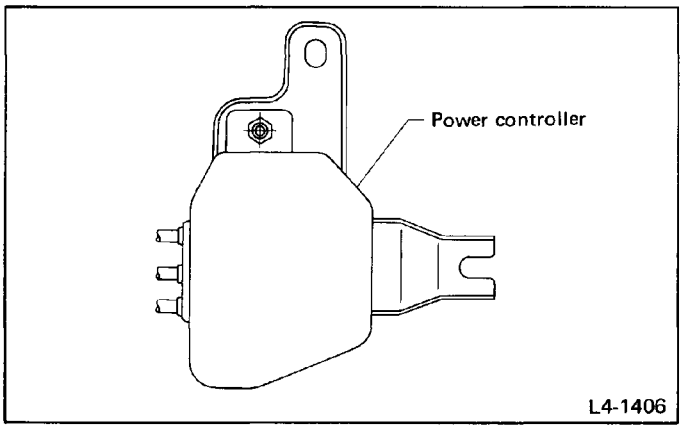

Fig. 10

4) Signal controller

This controller contains a 4-bit microcomputer. It is located between the rear quarter inner panel and the inner trim. It receives signals from the car-speed sensor to detect both car speed and steering operation and controls the operation of the motor pump ASSY. Since it is a car-speed-sensitive unit, it serves to reduce steering "assist" as speed increases. It also has an automatic selective function for high-speed operation, suburban driving, winding-road driving, and city-driving modes.

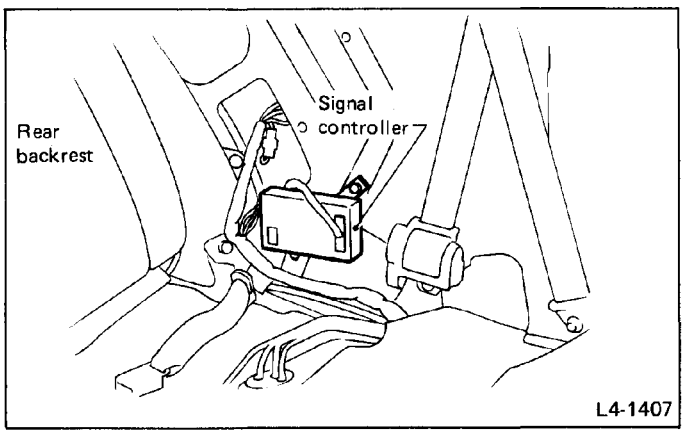

Fig. 11

SPECIFICATIONS AND SERVICE DATA

Specifications

				1800 cc	2700 cc
Whole System	Minimum turning circle			9.7 m (31.8 ft)	10.4 m (34.1 ft)
	Steering angle (Inside – Outside)			38° – 34.5°	36° – 32°
	Steering wheel diameter			370 mm (14.57 in)	
	Overall gear ratio (Turns, lock to lock)	Manual steering	VGR*1	20.0 – 25.0 (4.8)	–
		Power steering		17.0 (3.5)	17.0 (3.2)
Gearbox	Type	Manual steering		Rack and pinion	–
		Power steering		Rack and pinion, Integral	
	Backlash			0 (Automatically adjustable)	
	Valve (Power steering system)			Rotary valve	
Pump (Power steering system)	Type			Vane pump	
	Oil tank			Installed to pump	
	Output			5.9 cm^3 (5.9 cc, 0.360 cu in)/rev.	1.8 cm^3 (1.8 cc, 0.110 cu in)/rev.
	Relief pressure	TURBO & MPFI		6,375 kPa (65 kg/cm^2, 924 psi)	6,865 kPa (70 kg/cm^2, 995 psi)
		Others		4,413 kPa (45 kg/cm^2, 640 psi)	
	Hydraulic flux control			Drooping in response to engine revolution	Electronic control, car-speed sensing type
	Hydraulic flux	700 rpm		7 liters (7.4 US qt, 6.2 Imp qt)/min.	Max 4.8 liters (5.1 US qt, 4.2 Imp qt)/min.
		3,000 rpm		2.5 liters (2.6 US qt, 2.2 Imp qt)/min.	Min 0 liters (0 US qt, 0 Imp qt)/min.
	Range of revolution			500 – 7,000 rpm	0 – 2,800 rpm
	Revolving direction			Clockwise	
Working Fluid (Power steering system)	Name			ATF DEXRON II	SPECIAL STEERING FLUID
	Capacity	Oil tank		0.28 liters (0.6 US pt, 0.5 Imp pt)	0.25 liters (0.5 US pt, 0.4 Imp pt)
		Total		0.7 liters (1.5 US pt, 1.2 Imp pt)	0.7 liters (1.5 US pt, 1.2 Imp pt)

***1 Variable Gear Ratio**

Service Data

ITEM			STANDARD	SERVICE LIMIT
Steering wheel	Free play		0 – 25 mm (0 – 0.98 in)	
Turning angle	Inner tire & wheel	1800 cc	36°30′ – 39°30′	
		2700 cc	34°30′ – 37°30′	
	Outer tire & wheel	1800 cc	33° – 36°	
		2700 cc	30°30′ – 33°30′	
Steering shaft	Clearance between steering wheel and column cover		2 – 4 mm (0.08 – 0.16 in)	
Steering gearbox (Manual steering system)	Rack shaft	Bend limit (Run-out)	0.2 mm (0.008 in)	
	Pinion	Free play limit	0.3 mm (0.012 in)	
		Rotating torque	Within 30 mm (1.18 in) from rack center at straight-ahead position: Less than 0.9 N·m (0.09 kg-m, 0.7 ft-lb) Maximum allowable value: 1.4 N·m (0.14 kg-m, 1.0 ft-lb)	
Steering gearbox (Power steering system)	Sliding resistance	1800 cc	304 N (31 kg, 68 lb) or less	
		2700 cc	284 N (29 kg, 64 lb) or less	
	Rack shaft play in radial direction	Right-turn steering	0.15 mm (0.0059 in) or less	
		Left-turn steering	Horizontal movement: 0.3 mm (0.012 in) or less Vertical movement: 0.15 mm (0.0059 in) or less	
	Input shaft play	In radial direction	0.18 mm (0.0071 in) or less	
		In axial direction	0.1 mm (0.004 in) or less	
	Turning resistance	1800 cc	Within 30 mm (1.18 in) from rack center at straight-ahead position: Less than 11.18 N (1.14 kg, 2.51 lb)	
		2700 cc	10.20 N (1.04 kg, 2.29 lb)	
		1800 cc	Maximum allowable value: 12.7 N (1.3 kg, 2.9 lb)	
		2700 cc	11.67 N (1.19 kg, 2.62 lb)	
Oil pump (Power steering system for 1800 cc)	Pulley shaft	Radial play	0.4 mm (0.016 in) or less	
		Axial play	0.9 mm (0.035 in) or less	
	Pulley	Ditch deflection	1.0 mm (0.039 in) or less	
		Resistance to rotation	9.22 N (0.94 kg, 2.07 lb) or less	
	Regular pressure		981 kPa (10 kg/cm^2, 142 psi) or less	
	Relief pressure and working pressure		5,884 – 7,355 kPa (60 – 75 kg/cm^2, 853 – 1,067 psi)	

ITEM		STANDARD	SERVICE LIMIT
Motor pump (Power steering system for 2700 cc)	Regular pressure	981 kPa (10 kg/cm^2, 142 psi) or less	
	Relief pressure and working pressure	6,669 – 7,355 kPa (68 – 75 kg/cm^2, 967 – 1,067 psi)	
	Continuous output rating of motor	140 W	
Belt line (Power steering system)	Belt tension	Refer to 1. Drive Belt(s) [Except Camshaft] in chapter 1-5.	
Steering wheel efforts (Power steering system)	In standstill with engine idling on concrete road	31.4 N (3.2 kg, 7.1 lb) or less	
	In standstill with engine stalled on concrete road	93.2 N (9.5 kg, 20.9 lb) or less	(1800 cc)
		118 N (12 kg, 26 lb) or less	(2700 cc)

- **Recommended Power Steering Fluid (Except XT6)**

B.P.	B.P. Autran DX
CALTEX	Texamatic Fluid 6673 Dexron
CASTROL	CASTROL TQ Dexron
MOBIL	Mobil ATF220
SHELL	Shell ATF Dexron
TEXACO	Texamatic Fluid 6673 Dexron

- **Recommended Power Steering Fluid (XT6)**

IDEMITSU	Special Power Steering Fluid

COMPONENT PARTS

Steering Column

1 Pipe ASSY
2 Shaft ASSY
3 Fix bracket CP
4 Inner bracket CP
5 Tilt lever
6 Bolt
7 Tilt adjusting screw
8 Bearing
9 Washer
10 Bolt
12 Wing bracket ASSY
13 Telescopic shaft
14 Telescopic lock shaft
15 Rod
16 Telescopic lock key
17 Snap ring
19 Telescopic adjusting screw
20 Nut

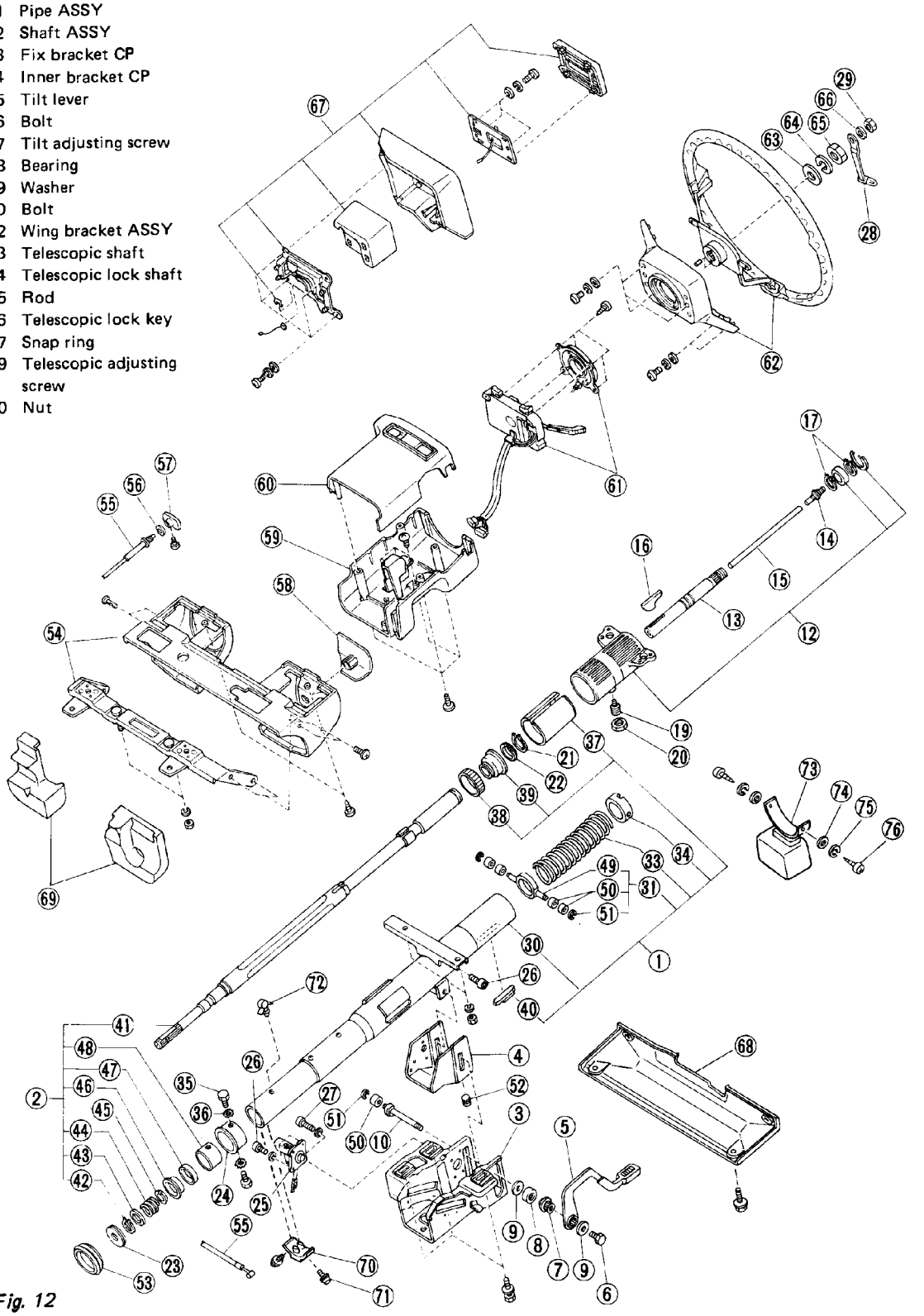

21 Snap ring
22 Washer
23 Dust seal
24 Spacer
25 Memory pin ASSY
26 Bolt
27 Bolt
28 Telescopic lever
29 Nut
30 Column pipe CP
31 Pin ASSY
33 Tilt spring
34 Boss
35 Bolt
36 Lock washer
37 Telescopic bush
38 Bearing bush
39 Bearing
40 Telescopic guide
41 Steering shaft CP
42 Snap ring
43 Washer
44 Shaft spring
45 Washer
46 Bearing
47 Bearing bush
48 Housing
49 Pin CP
50 Bearing
51 Clip
52 Stopper
53 Toe board bush
54 Lower cover ASSY
55 Pop-up cable ASSY
56 Dress nut
57 Knob
58 Cap
59 Lower column cover
60 Upper column cover
61 Combination switch ASSY
62 Steering wheel ASSY
63 Washer
64 Spring washer
65 Nut
66 Spring washer
67 Pad ASSY
68 Protector
69 Pad
70 Steering sensor
71 Screw ASSY
72 Clip
73 Pad CP (Knee)
74 Washer
75 Spring washer
76 Screw

Fig. 12

L4-1408

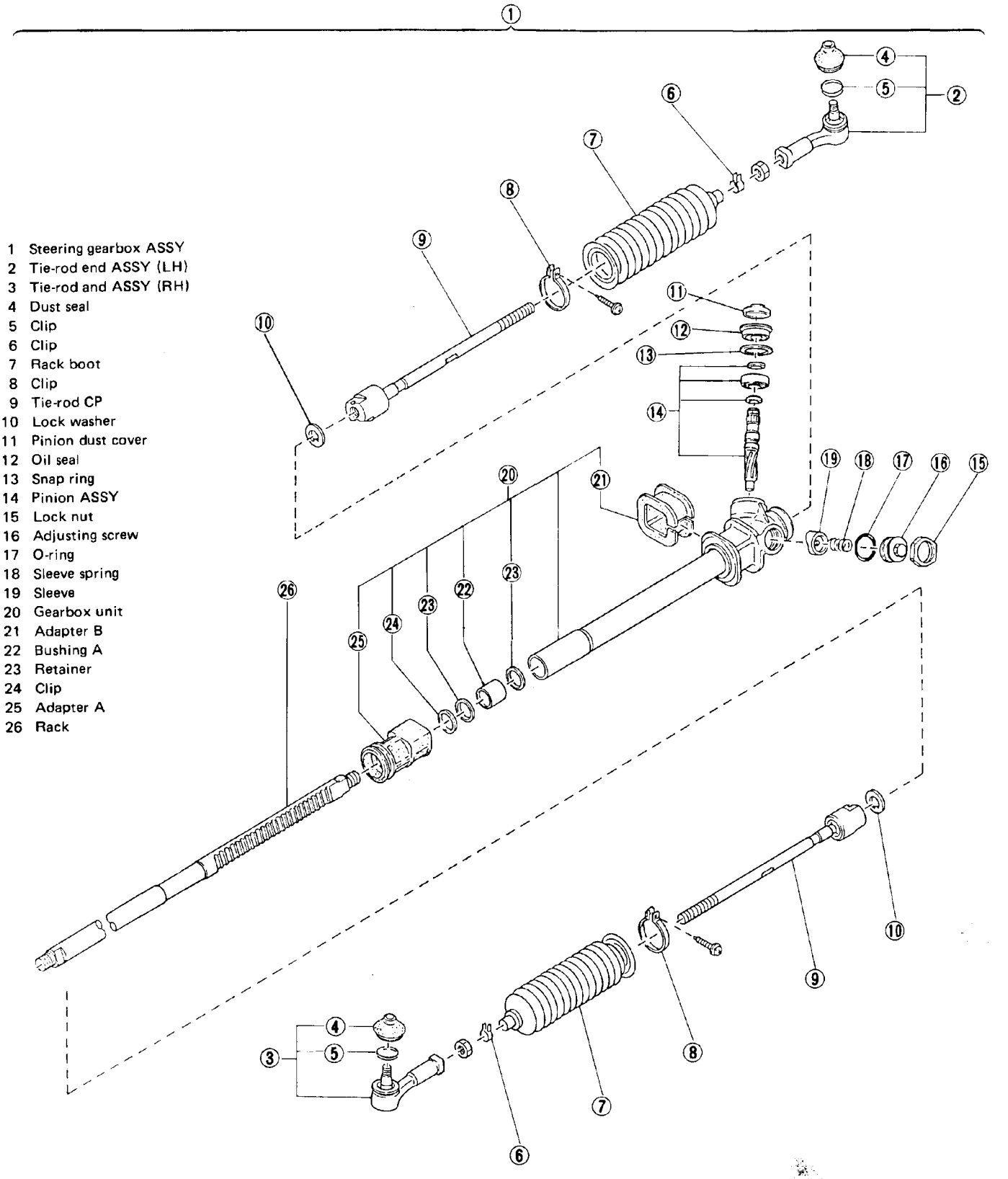

Fig. 13 Steering gearbox

L4-1158

Power Steering System (Except for XT6)

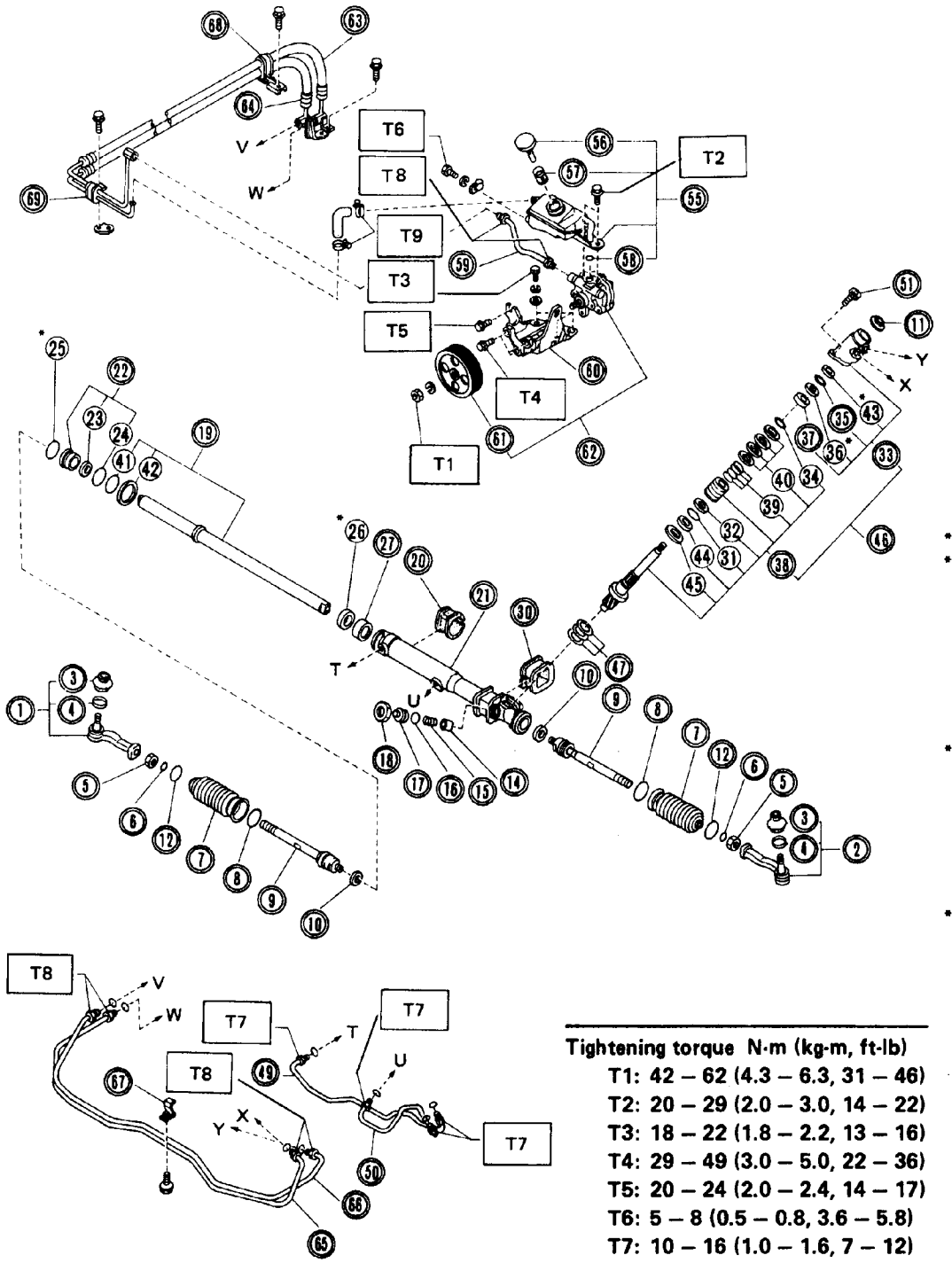

1 Tie-rod end ASSY, RH
2 Tie-rod end ASSY, LH
3 Dust seal
4 Snap ring
5 Nut
6 Clip (small)
7 Boot
8 Clip (large)
9 Tie-rod CP
10 Lock washer
11 Dust cover
12 Clip (medium)
14 Sleeve
15 Spring
16 O-ring (sleeve)
17 Adjusting screw
18 Lock nut
19 Rack ASSY
20 Adapter (cylinder)
21 Steering body ASSY
22 Seal holder ASSY
23 Y-packing (seal holder)
24 O-ring (seal holder)
*25 Snap ring (seal holder)
*26 Oil seal (pinion housing)
27 Backup ring
30 Adapter (gear)
31 O-ring (pinion)
32 Seal ring (pinion)
33 Valve housing ASSY
34 Snap ring (pinion)
35 Backup ring
*36 Y-packing (valve housing)
37 Ball bearing (valve housing)
38 Pinion & valve ASSY
39 O-ring (valve)
40 Seal ring (valve)
41 O-ring (rack piston)
42 Seal ring (rack piston)
*43 Dust seal
44 Oil seal (pinion)
45 Spacer
46 Valve ASSY
47 Shim
49 Pipe ASSY A (Long)
50 Pipe ASSY B (Short)
51 Bolt
53 Seal kit
Consists of all * marked parts for one vehicle.
55 Tank ASSY
56 Cap
57 Strainer
58 O-ring
59 Pipe ASSY E
60 Bracket
61 Pulley
62 Pump ASSY
63 Hose A
64 Hose B
65 Pipe C
66 Pipe D
67 Clamp A
68 Clamp B
69 Clamp C

Tightening torque N·m (kg-m, ft-lb)

T1:	42 – 62 (4.3 – 6.3, 31 – 46)
T2:	20 – 29 (2.0 – 3.0, 14 – 22)
T3:	18 – 22 (1.8 – 2.2, 13 – 16)
T4:	29 – 49 (3.0 – 5.0, 22 – 36)
T5:	20 – 24 (2.0 – 2.4, 14 – 17)
T6:	5 – 8 (0.5 – 0.8, 3.6 – 5.8)
T7:	10 – 16 (1.0 – 1.6, 7 – 12)
T8:	10 – 20 (1.0 – 2.0, 7 – 14)
T9:	2 – 3 (0.2 – 0.3, 1.4 – 2.2)

NOTE:

a. ○ shows availability as replacement part.

b. * can not be supplied singularly. These parts are supplied as sets,available as seal kit (53) .

Fig. 14

L4-693

1 Rear body
2 Seal washer
3 Pin
4 Rotor
5 Vane
6 Cam ring
7 Pressure plate
8 O-ring
9 Front body
10 Oil seal
11 Retaining ring
12 Shaft
13 Bearing
14 Snap ring
15 Pulley
16 Spring
17 Spool valve
18 Connector

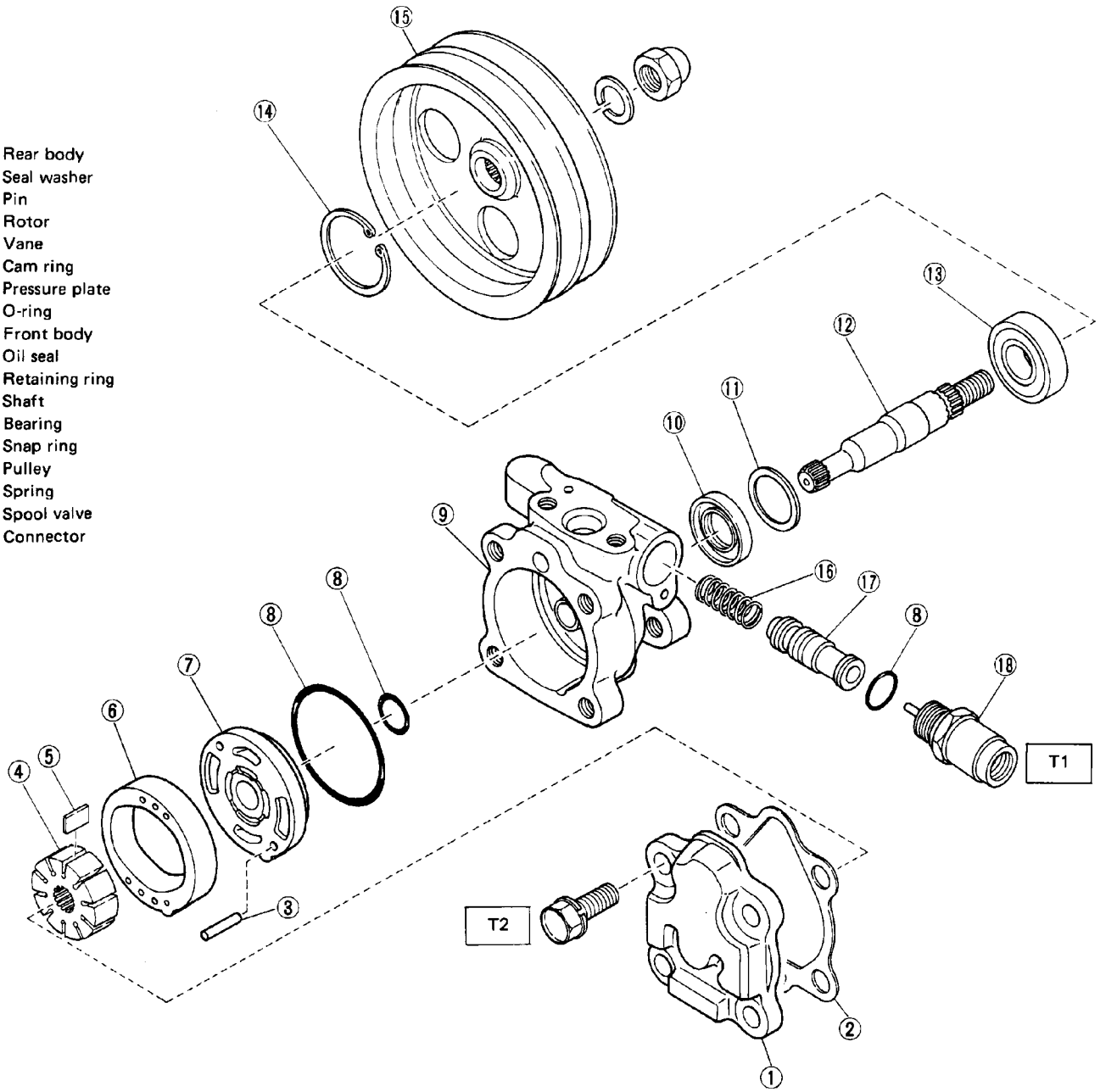

Tightening torque N·m (kg-m, ft-lb)
T1: 29 – 39 (3.0 – 4.0, 22 – 29)
T2: 49 – 59 (5.0 – 6.0, 36 – 43)

Fig. 15 Oil pump

L4-1222

Power Steering System for XT6

1 Tie-rod end ASSY, RH
2 Tie-rod end ASSY, LH
3 Dust seal
4 Snap ring
5 Nut
6 Clip (small)
7 Boot
8 Clip (large)
9 Tie-rod CP
10 Lock washer
11 Dust cover
12 Clip (medium)
14 Sleeve
15 Spring
16 O-ring (sleeve)
17 Adjusting screw
18 Lock nut
19 Rack ASSY
20 Adapter (cylinder)
21 Steering body ASSY
22 Seal holder ASSY
23 Y-packing (seal holder)
24 O-ring (seal holder)
*25 Snap ring (seal holder)
*26 Oil seal (pinion housing)
27 Backup ring
30 Adapter (gear)
31 O-ring (pinion)
32 Seal ring (pinion)
33 Valve housing ASSY
34 Snap ring (pinion)
35 Backup ring
*36 Y-packing (valve housing)
37 Ball bearing (valve housing)
38 Pinion & valve ASSY
39 O-ring (valve)
40 Seal ring (valve)
41 O-ring (rack piston)
42 Seal ring (rack piston)
*43 Dust seal
44 Oil seal (pinion)
45 Spacer
46 Valve ASSY
47 Shim
49 Pipe ASSY A (Long)
50 Pipe ASSY B (Short)
51 Bolt
53 Seal kit
Consists of all * marked parts for one vehicle.
55 Motor pump ASSY
56 Cap
57 Strainer
58 Mounting rubber
59 Motor pump spacer
61 Spacer bushing
62 Bracket bushing
63 Hose A
64 Hose B
65 Pipe C
66 Pipe D
67 Clamp A
68 Clamp B
69 Power controller
70 Motor pump bracket
71 Bracket bushing
72 Motor pump bolt

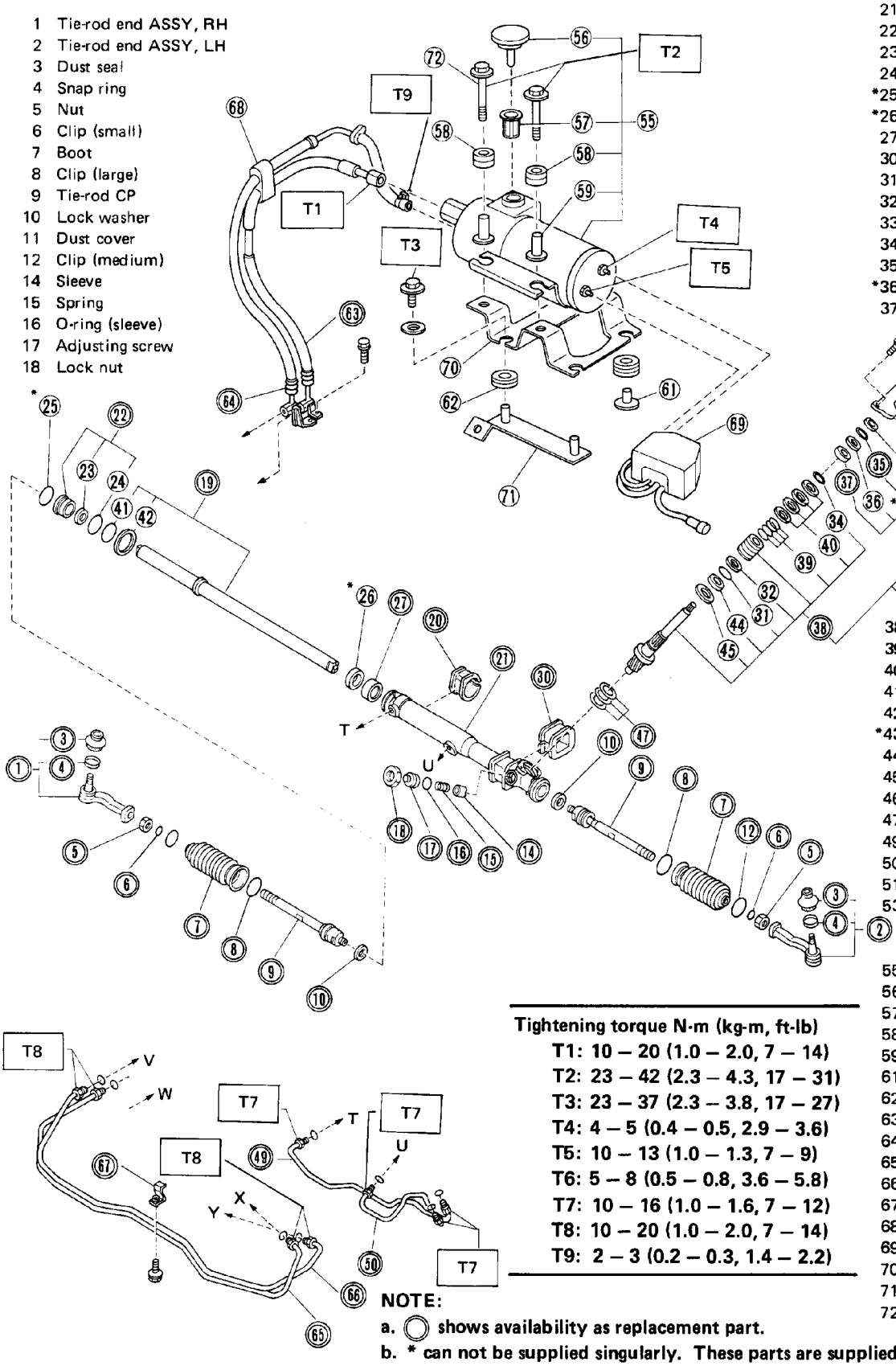

Tightening torque N·m (kg-m, ft-lb)

T1: 10 – 20 (1.0 – 2.0, 7 – 14)
T2: 23 – 42 (2.3 – 4.3, 17 – 31)
T3: 23 – 37 (2.3 – 3.8, 17 – 27)
T4: 4 – 5 (0.4 – 0.5, 2.9 – 3.6)
T5: 10 – 13 (1.0 – 1.3, 7 – 9)
T6: 5 – 8 (0.5 – 0.8, 3.6 – 5.8)
T7: 10 – 16 (1.0 – 1.6, 7 – 12)
T8: 10 – 20 (1.0 – 2.0, 7 – 14)
T9: 2 – 3 (0.2 – 0.3, 1.4 – 2.2)

NOTE:

a. ◯ shows availability as replacement part.

b. * can not be supplied singularly. These parts are supplied as sets, available as seal kit (53).

Fig. 16

L4-1409

SERVICE PROCEDURE

Steering Column

REMOVAL

1) Disconnect ground (−) battery cable.
2) Remove universal joint.

Not only when removing steering shaft/column but when removing steering column for servicing of other parts, be sure to remove universal joint. Steering column must not be lowered with only column mounting bolts loosened.

3) Remove lower cover under instrument panel.
4) Remove ventilation duct under steering column.
5) Remove protector by taking off the screw and clip.

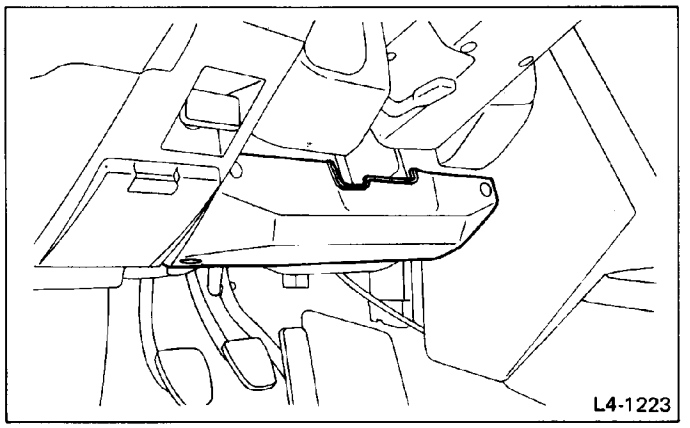

Fig. 17

6) Through the opening in toeboard, disconnec the steering sensor wiring harness at the bottom of steering column shaft.
7) Disconnect wiring harness connectors for ignition switch, combination switch, control wing switch, and combination meter. Then, remove screws securing harness under column bracket.
8) Remove meter cable.
9) Pull knob to pop up steering wheel. Then, remove cable, push down steering wheel and relock it.
10) After setting steering wheel to lowest position, fasten tilt lock bolt [8 mm in dia. and 16 mm (0.63 in) in length] from below column bracket.

a. Temporarily tighten bolt until its bearing surface touches.
b. This step may be omitted when entire steering column ASSY is to be disassembled.

11) Remove steering column mounting bolts under instrument panel.

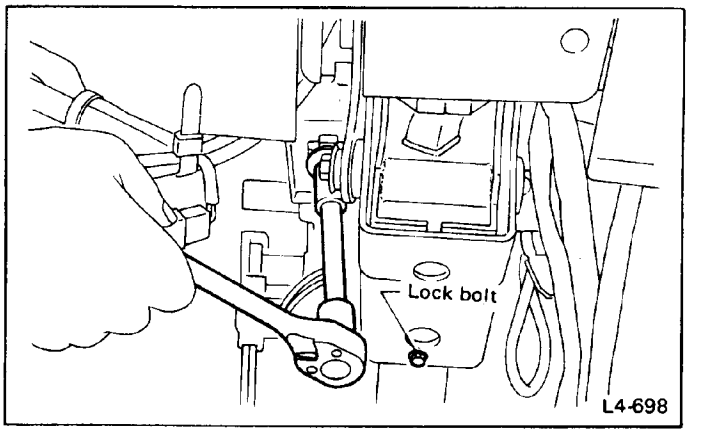

Fig. 18

12) Pull out steering shaft ASSY from toe board toward inside of passenger compartment.

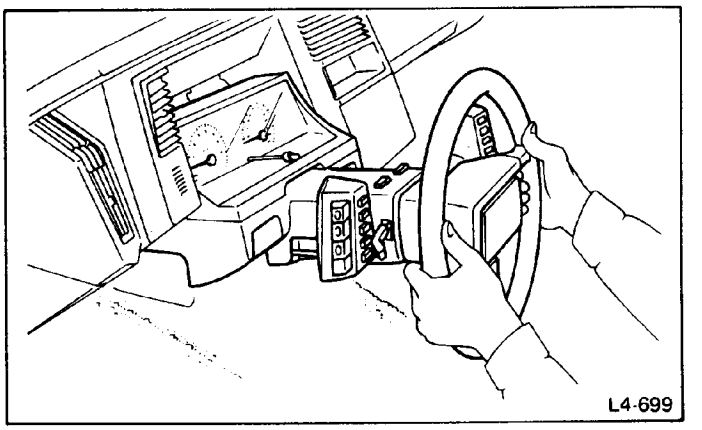

Fig. 19

a. Be careful not to damage sensor steering and its wiring harness.
b. Because combination meter is removed with shaft assembly, be careful not to damage meter and instrument panel surface.

DISASSEMBLY

1) Remove pad ASSY from steering wheel as follows. Loosen telescopic lever. With your hand, hold pad's concave portion containing lever and pull it toward you.

2) Loosen nut on top of steering shaft, and remove telescopic lever.

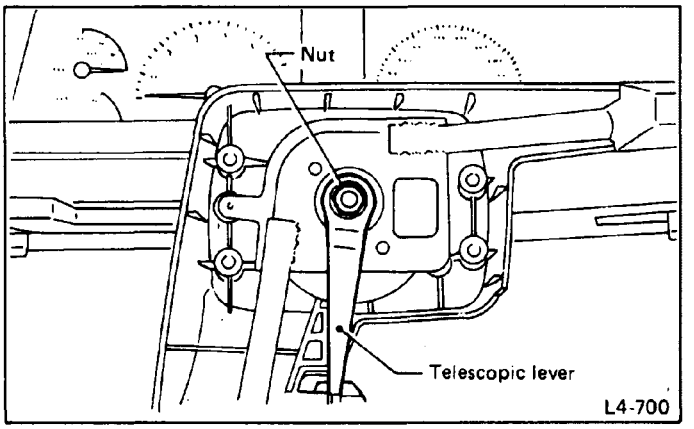

Fig. 20

3) Loosen nut securing steering wheel, and remove steering wheel from shaft using a steering wheel puller.

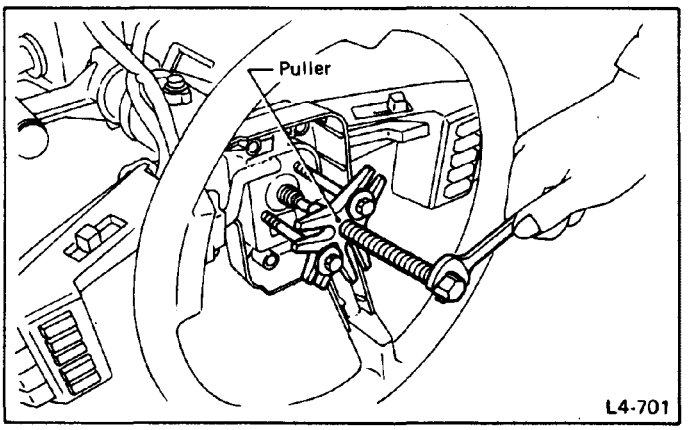

Fig. 21

4) Loosen nut on meter bracket of steering column, and remove combination meter ASSY.

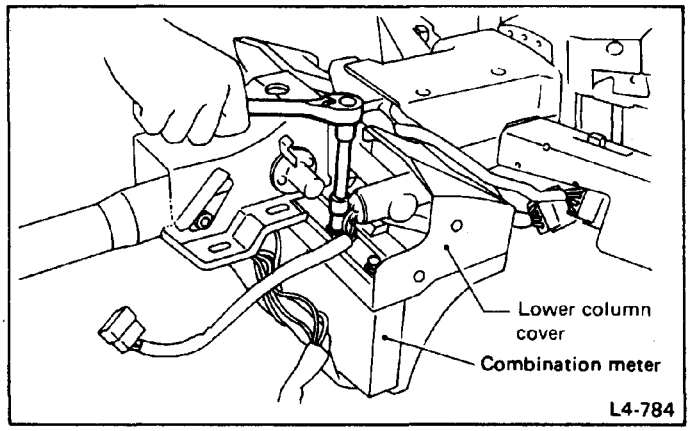

Fig. 22

5) Remove upper and lower steering column covers by loosening four screws.

6) Remove control wing ASSY and combination switch ASSY.

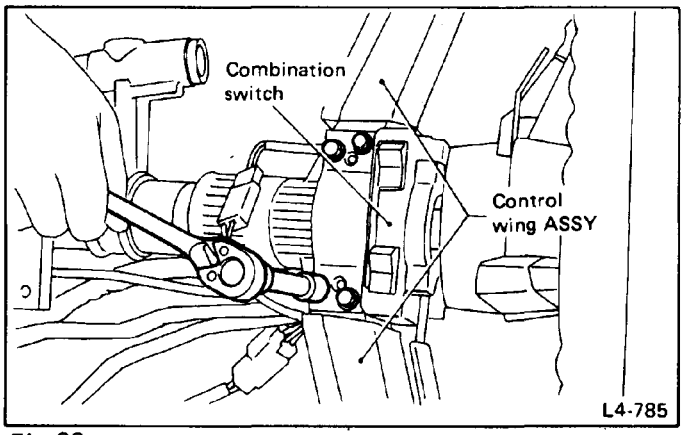

Fig. 23

7) Remove two screws which secure steering sensor to column and remove steering sensor.

TELESCOPIC PORTION

(Telescopic portion can be disassembled without removing column ASSY from vehicle.)

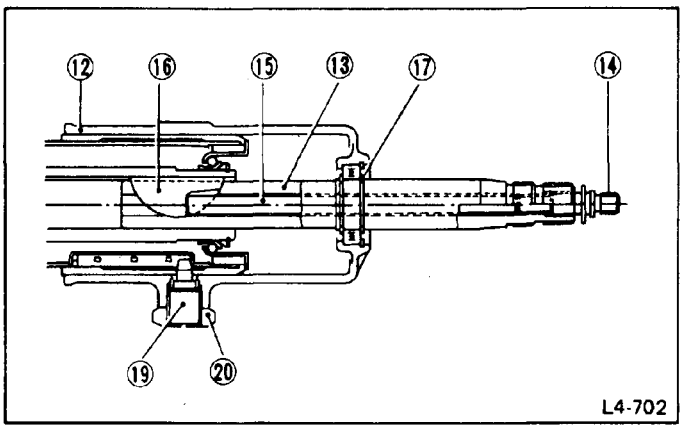

Fig. 24

1) Remove nut ⑳ and adjusting screw ⑲ in underside of wing bracket ASSY ⑫. Then, remove bracket ⑫ and telescopic shaft ⑬ as a unit.

2) Remove snap ring ⑰ and then shaft ⑬ from bracket ⑫.

3) From shaft ⑬, remove lock key (telescopic) ⑯, lock shaft (telescopic) ⑭ and rod ⑮.

BRACKET COMPLETE

1) Mount column ASSY on STAND (926740000) and secure with a vise.

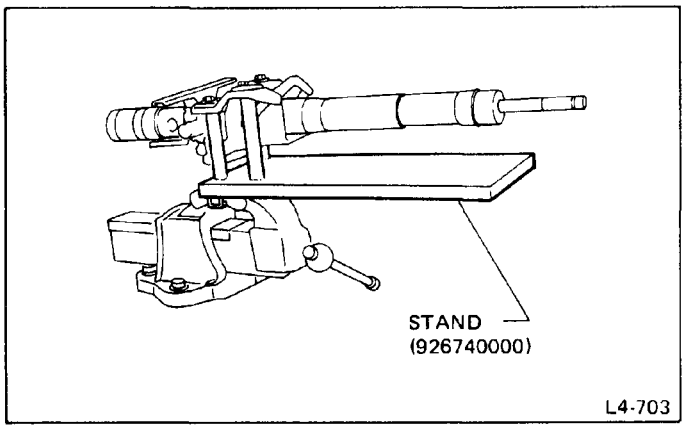

Fig. 25

2) Remove memory pin ASSY ㉕ from bracket CP (fix) ③ by loosening bolts.

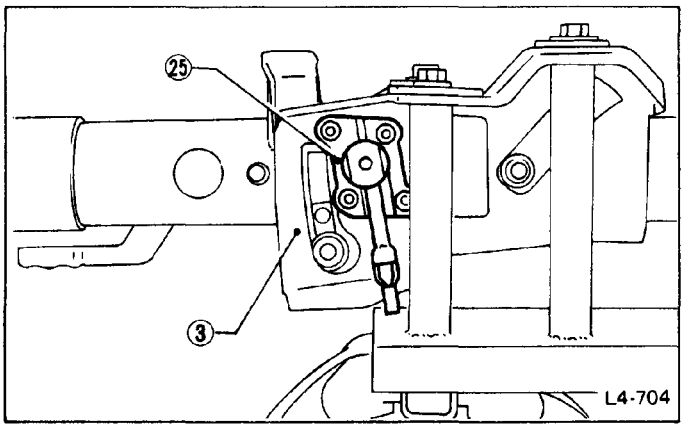

Fig. 26

3) Turn bolt ⑥ clockwise to remove. Remove washer ⑨. Next, push tilt lever ⑤ down and loosen adjusting screw (tilt) ⑦. Then, remove adjusting screw ⑦, bearing ⑧, and washer ⑨ while pushing column in direction of arrow.

Tilt lever adjusting screw and bolt have left-hand threads.

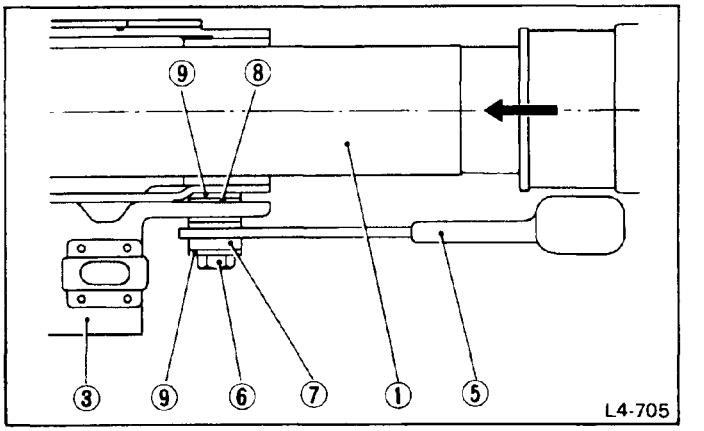

Fig. 27

4) Align the flange of bolt ⑩ with round part of guide groove in bracket CP (fix) ③, and simultaneously remove bolt ⑩ and bearing ㊿.

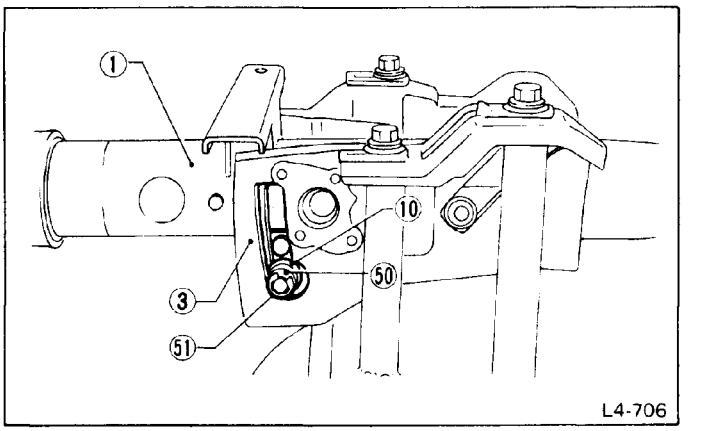

Fig. 28

5) After removing column ASSY from STAND, remove pipe ASSY ① from bracket ③ while turning the former.

6) Insert a screwdriver between inner bracket CP ④ and pipe ASSY ①. Release the fit of protrusion, and remove bracket while swinging it sideways.

Be careful not to damage either tilt sliding surface.

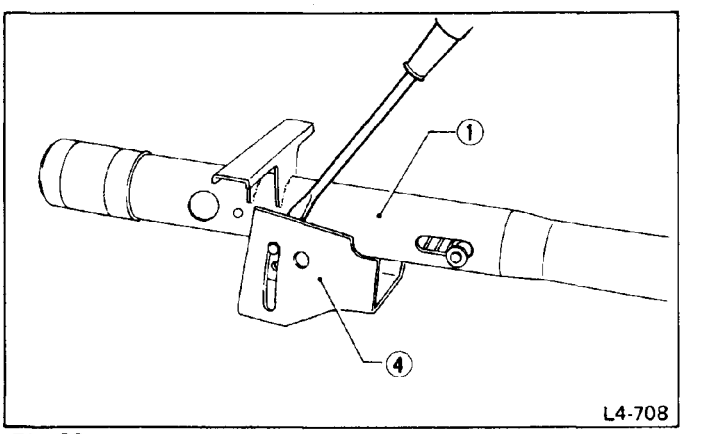

Fig. 29

SHAFT ASSEMBLY

1) Remove wing bracket ASSY ⑫ and telescopic shaft ⑬. (Refer to "Disassembly of telescopic portion.")
2) Remove dust seal ㉓ by piercing with a sharply-pointed tool such as a scribing punch.

Do not pry off dust seal with a screwdriver, etc. Also, do not reuse dust seal when assembling shaft ASSY.

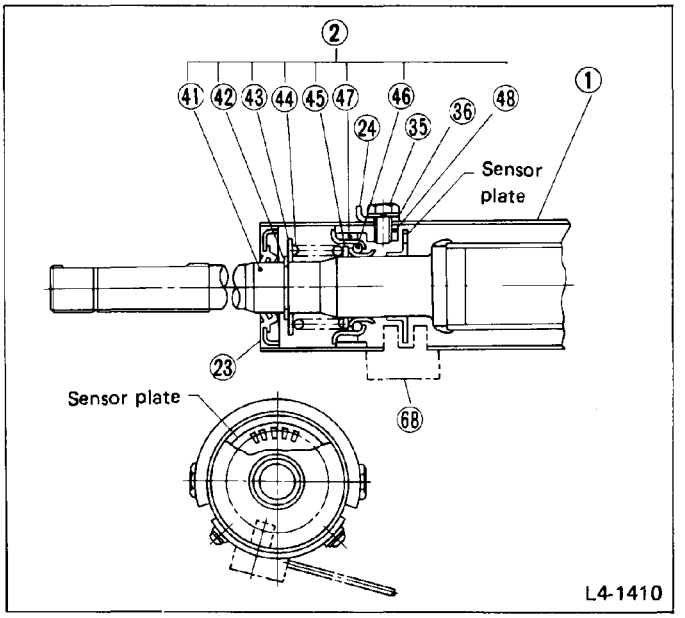

Fig. 30

3) With pipe ASSY ① pushed in direction of arrow, remove snap ring ㉑ and washer ㉒. Next, remove bolt ㉟, washer ㊱, and spacer ㉔, and remove shaft ASSY ② by pulling downward (in direction of arrow).

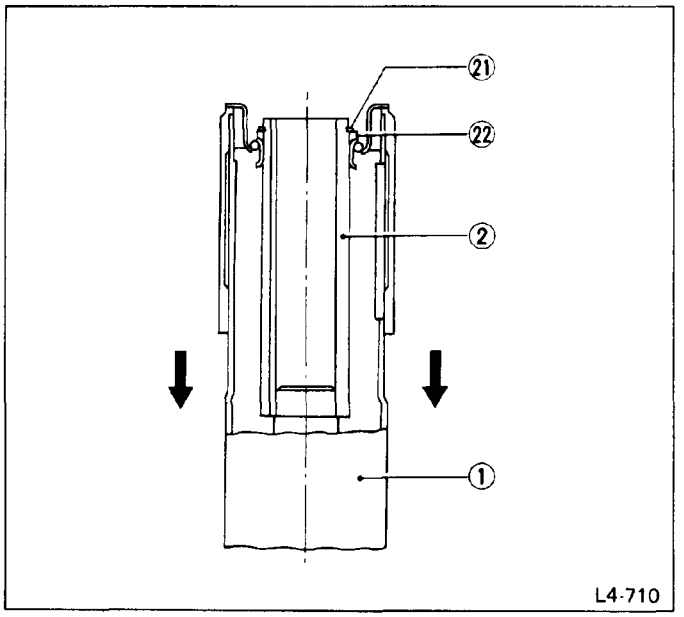

Fig. 31

Be careful not to damage sensor plate when removing shaft ASSY ②. Sensor plate is pressed into place.

4) Remove snap ring ㊷. Then remove washers ㊸ and ㊺, spring ㊹, and housing ㊽.
5) Remove bearing ㊻ from housing ㊽. Remove bushing ㊼ from housing ㊽ by prying with a screwdriver, etc.

a. Do not reuse bushing.
b. Be careful not to scratch inside of housing.

PIPE ASSEMBLY

1) After removing bearing ㊴ and bushing (telescopic) ㊲, remove bushing (bearing) ㊳ by prying with a screwdriver, etc.

Be careful not to scratch inside of pipe. Also, do not reuse bushing (bearing).

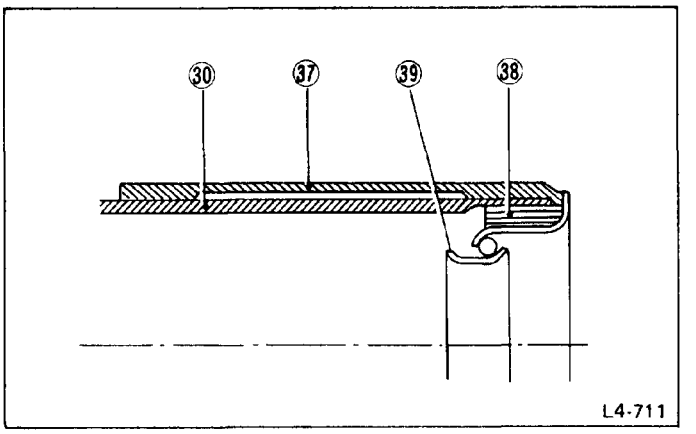

Fig. 32

2) Remove guide ㊵ from pipe by inserting screwdriver into them.

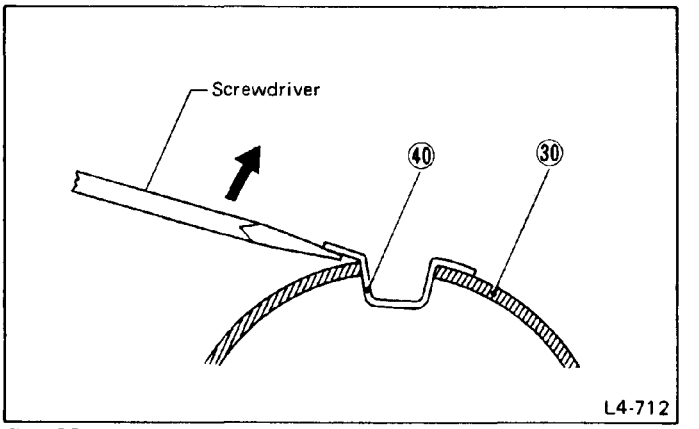

Fig. 33

3) While pushing INSTALLER (926730000) in direction of arrow, remove bolt ㉖. And take out boss ㉞ and spring ㉝. Align pin ASSY ㉛ with direction of long hole in pipe and remove from hole.

Engage protrusion at INSTALLER's end with notched portion of boss ㉞.

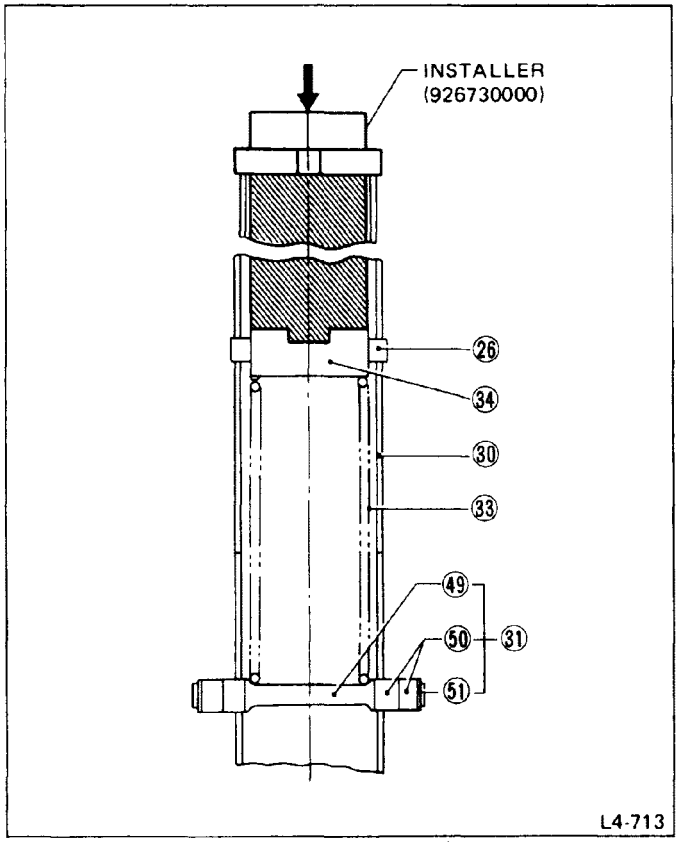

Fig. 34

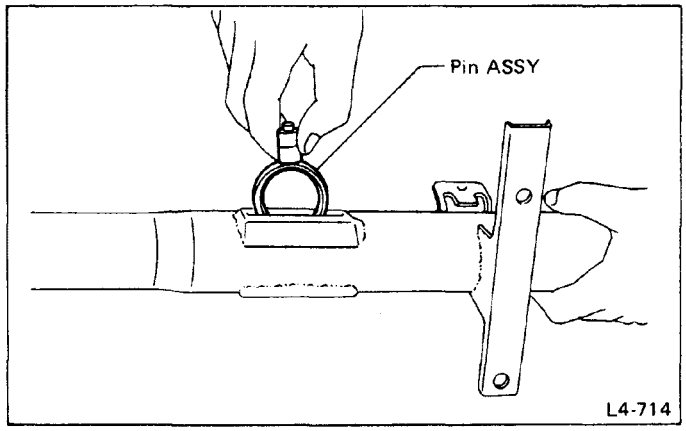

Fig. 35

4) Remove clip ㊶ from pin ASSY ㉛ and pull out needle bearing ㊿.

INSPECTION

Clean the disassembled parts with a cloth, and check for wear, damage, or any other faults. If necessary, repair or replace faulty parts.

No.	Part Name	Inspection	Corrective action
1	Shell ball bearings (upper, lower) and ball bearing	• Wear and damage * With bearing installed to steering shaft, check for axial and radial play.	Replace if faulty.
2	Collapsible shaft CP	• Shaft length Shaft runout Unit: mm (in) 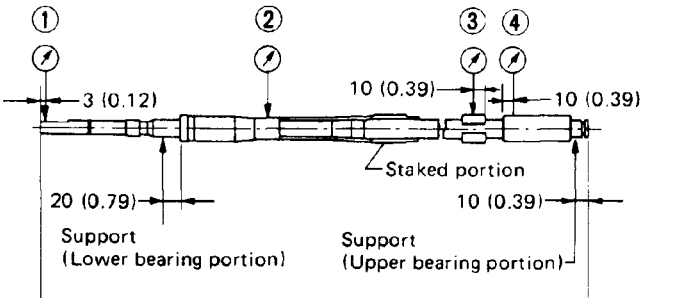 *Fig. 36* **Shaft length:** **751.7 ± 1 mm (29.59 ± 0.04 in)** **① Shaft lower end:** **Runout: 1.2 mm (0.047 in) or less** **② Elliptical press portion:** **Rotating dia.: 32.6 mm (1.283 in) or less** **③ Collar portion:** **Runout: 0.6 mm (0.024 in) or less** **④ Telescopic pipe** **Runout: 0.3 mm (0.012 in) or less** • Looseness in staked portion • Scratches on inside of telescopic pipe • Damage on whole shaft	Replace
		• Damaged sensor plate	Repair or replace shaft ASSY
		• Dirty sensor plate	Clean
3	Telescopic shaft	Scratches on telescopic sliding surface Scratches in keyway	Replace
4	Key (telescopic)	Scratches on key surface	Replace
5	Bushing (telescopic)	Scratches on surface	Replace
6	Wing bracket	Scratches on telescopic sliding surface	Replace
7	Snap ring	Deformation and expansion	Replace
8	Tilt spring	Deterioration	Replace
9	Needle bearing	Wear and damage	Replace

No.	Part Name	Inspection	Corrective action
10	Bracket CP (fix)	Scratches on inner bracket sliding surface Scores on needle bearing rolling surface Looseness of sliding plate	Replace
11	Inner bracket	Scratches on sliding surfaces with bracket CP (fix) and tilt bracket Scratches and deformation on memory pin's engaged portion	Replace
12	Memory pin ASSY	Smooth pin slide Scratches on pin surface Deterioration of spring	Replace
13	Universal joint ASSY	• Free play of universal joint • Swinging torque 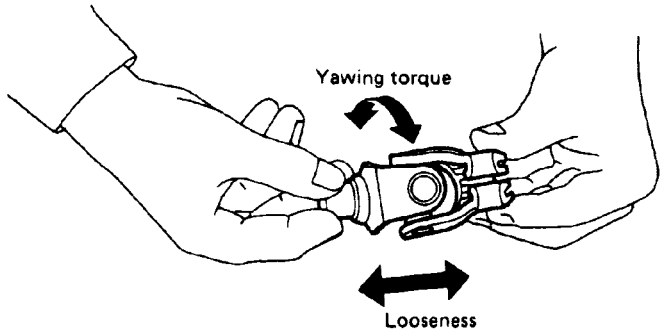 *Fig. 37* L4-380 **Universal joint free play (standard):** **0 mm (0 in)** **Universal joint swinging torque (maximum):** **0.6 N·m (0.06 kg-m, 0.4 ft-lb)**	Replace
14	Pipe CP	Looseness of staked rivets 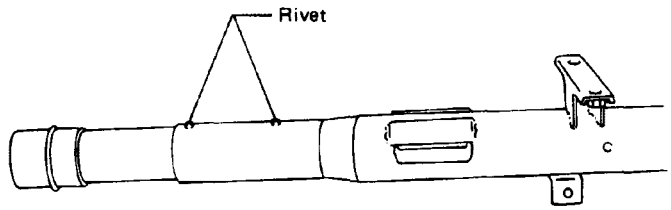 *Fig. 38* L4-717	Replace

ASSEMBLY

Grease:

a. To telescopic sliding portion and memory pin ASSY; VALIANT M2 (P/N 003608001)
b. To other portion; SUNLIGHT 2 (P/N 003602010)

PIPE ASSEMBLY

1) Insert pin ASSY ㉛ into column pipe CP ㉚ from its long hole. Apply small amount of grease to spring ㉝, and insert spring ㉝ and boss ㉞ into pipe so that the notched portion of boss faces upwards.

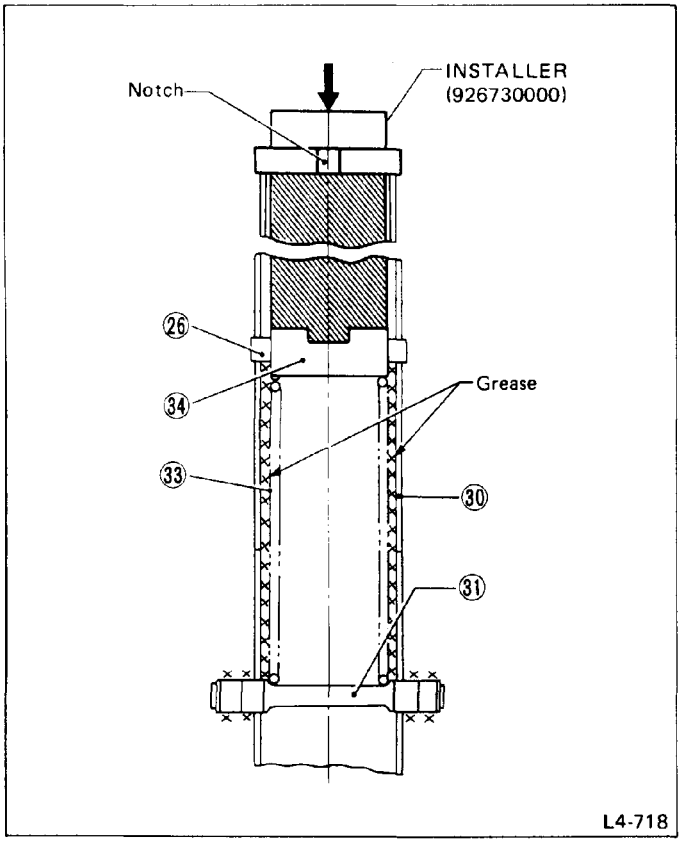

Fig. 39

2) Insert INSTALLER (926730000) in pipe and engage INSTALLER's protrusion with notched portion of boss ㉞. Then, align 5 mm screw hole in boss ㉞ with 9 mm (0.35 in) dia. hole in pipe by turning boss while compressing spring ㉝. Fix with bolt ㉖ from outside. (Align so notched portion of INSTALLER faces the vertical direction of steering.)

Tightening torque:
2.5 – 4.4 N·m (0.25 – 0.45 kg-m, 1.8 – 3.3 ft-lb)

3) Apply small amount of grease to bearing periphery of pin ASSY.

4) Apply adhesive (Cemedine 5430) to outer periphery of bushing (bearing) ㊳. Combine bushing ㊳ and bearing ㊴, and insert them in the pipe up to the end. Leave a gap of 2 to 3 mm (0.08 to 0.12 in) at end of pipe by prying only bearing with a screwdriver.

a. Be careful not to allow adhesive to overflow.
b. Apply grease to bearing.

5) Fit guide (telescopic) ㊵ in long hole of pipe ㉚. Then, stretch bushing (telescopic) ㊲ and insert it securely between end of pipe and bearing.

The guide ㊵ should be installed with short-flanged side down.

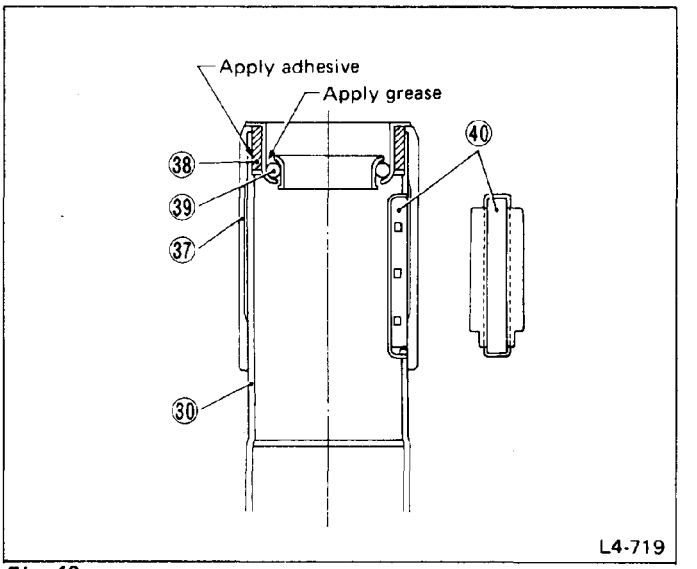

Fig. 40

SHAFT ASSEMBLY

1) Apply adhesive (Cemedine 5430) to outer periphery of bushing (bearing) ㊼, and fit it into housing ㊽ together with bearing ㊻. Install housing ㊽, washer ㊺, spring ㊹ and washer ㊸ on shaft CP ㊶, and lock them with snap ring ㊷.

a. Do not apply grease to the sensor plate slit.
b. Be careful not to damage sensor plate.

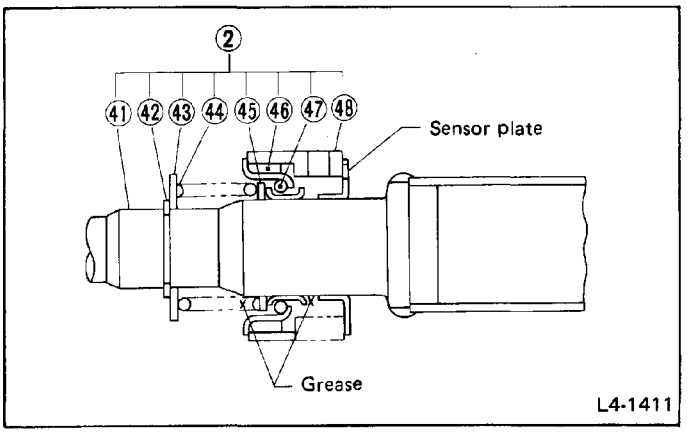

Fig. 41

2) After installing spacer ㉔ on pipe ASSY ①, put shaft ASSY ② into ①, align screw hole of housing with holes of pipe and spacer, and lock with bolt ㉟ and lock washer ㊱.

Tightening torque:
7.4 – 12.3 N·m (0.75 – 1.25 kg-m, 5.4 – 9.0 ft-lb)

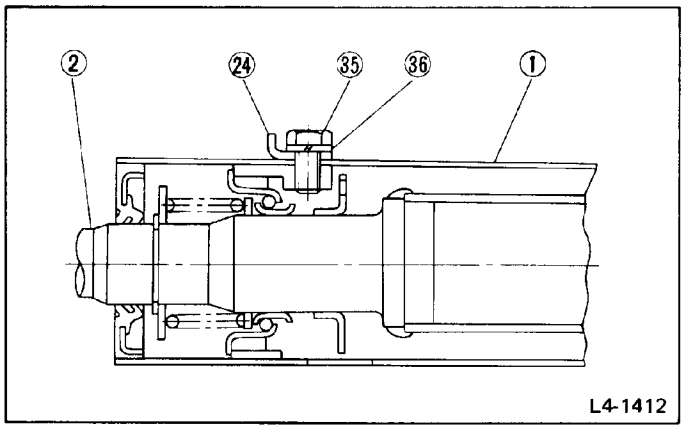

Fig. 42

Put shaft ASSY ② into ① with notch of housing aligned with pipe seam.

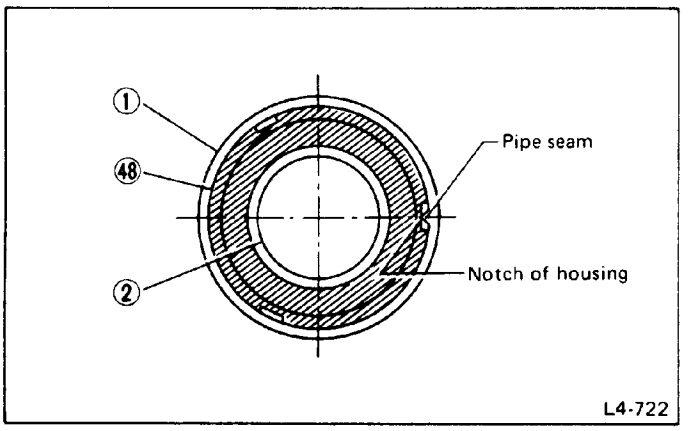

Fig. 43

3) Support lower end of shaft ASSY ②. While compressing pipe ASSY ① in direction of arrow, install washer ㉒ and lock with snap ring ㉑.

a. Do not apply more force to pipe ASSY than necessary [about 294 N (30 kg, 66 lb)].
b. Install washer with its tapered side facing the bearing.
c. Be sure to fit snap ring snugly into undercut on shaft.
d. After assembling, there must not be any axial or radial play of shaft.

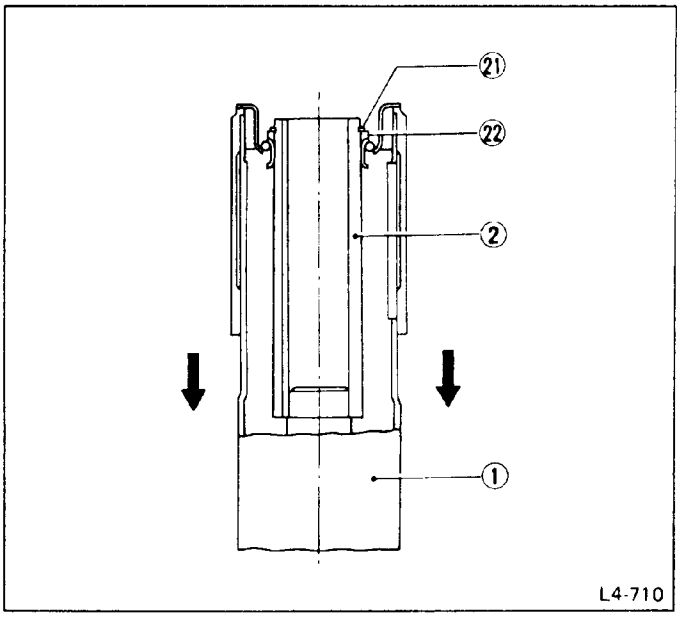

Fig. 44

4) Install dust seal ㉓ in place.

After installation, ensure shaft rotates smoothly without rubbing and dragging.

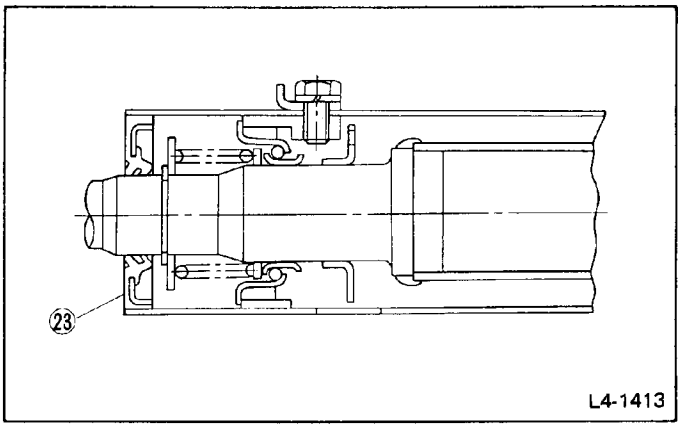

Fig. 45

TELESCOPIC PORTION

1) Fit lock key (telescopic) ⑯ into keyway on shaft (telescopic) ⑬. Put shaft ⑬ and shaft ASSY ② together with lock key ⑯ fitted in keyway on ②. Fit snap ring ⑰ in undercut on key side of shaft ⑬ in advance. Apply grease to key ⑯, sliding portion of shaft ⑬, and inner wall of shaft ASSY ②.

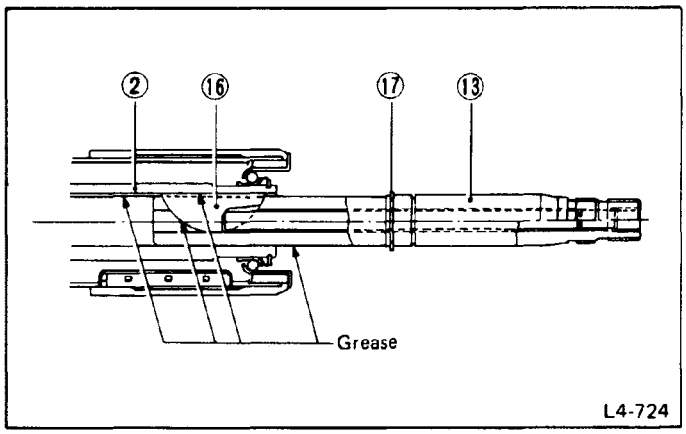

Fig. 46

2) Apply grease to outer periphery of bushing (telescopic) ㊲, bearing portion of wing bracket ASSY ⑫, and concavity of guide (telescopic) ㊵. Then, install bracket ⑫ and lock with snap ring ⑰.

Make sure that snap ring fits snugly in undercut.

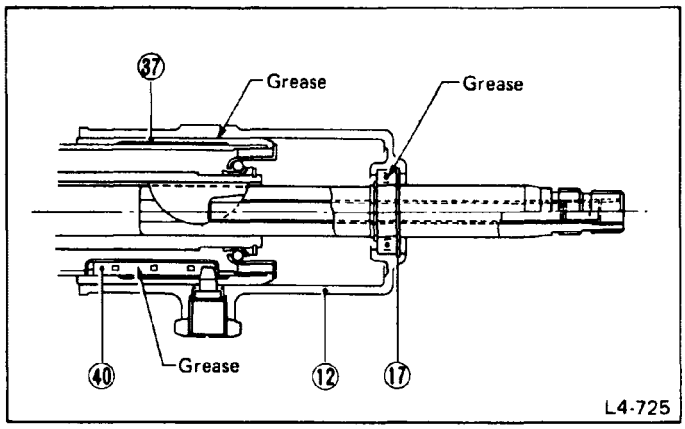

Fig. 47

3) Align 14 mm screw hole (protrusion portion) of bracket ⑫ with slit in bushing ㊲. Then, install adjusting screw (telescopic) ⑲ and nut ⑳. (Temporary tightening is enough.) Apply grease to tapered part of adjusting screw ⑲ before installing.

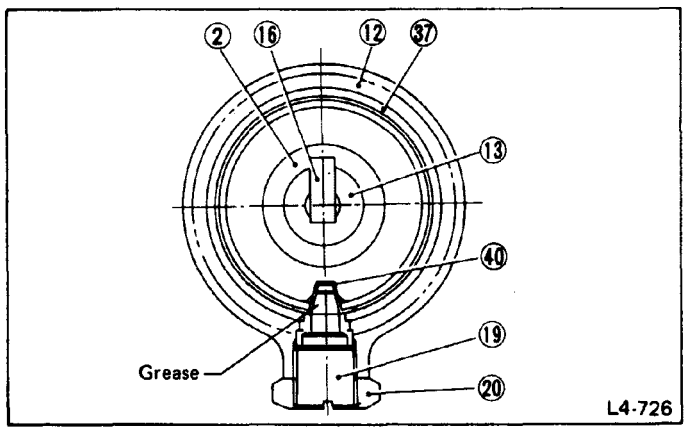

Fig 48

(If telescopic portion only was disassembled, proceed to item, "Adjustment of operating effort for telescoping" when reassembly has reached this stage.)

BRACKET COMPLETE

1) After assembling bracket CP (inner) ④ with pipe ASSY ①, insert pin ASSY ㉛ of pipe ASSY ① through arc groove in the bracket ③. With the above state, mount them on STAND (926740000). Then fix it in a vise. Apply grease to sliding surfaces of brackets ③ and ④ and pipe ASSY ① (where ①, ③ and ④ are in contact).

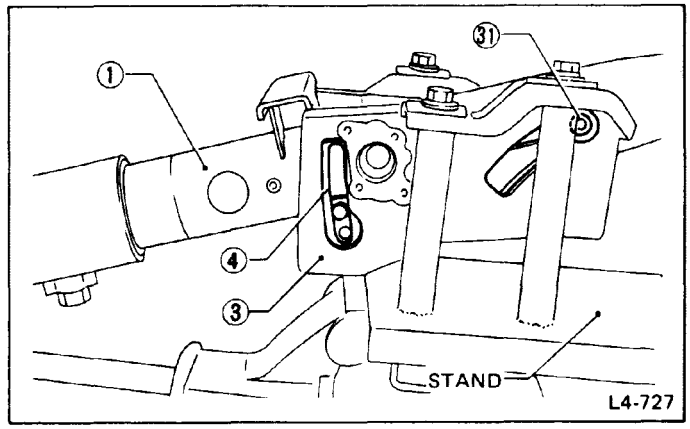

Fig. 49

2) Align bolt hole in lower bracket of shaft ASSY ① with guide grooves in brackets ③ and ④. Insert bolt ⑩, to which bearing ㊿ and clip ㊶ have been installed, through bolt hole to opposite side.

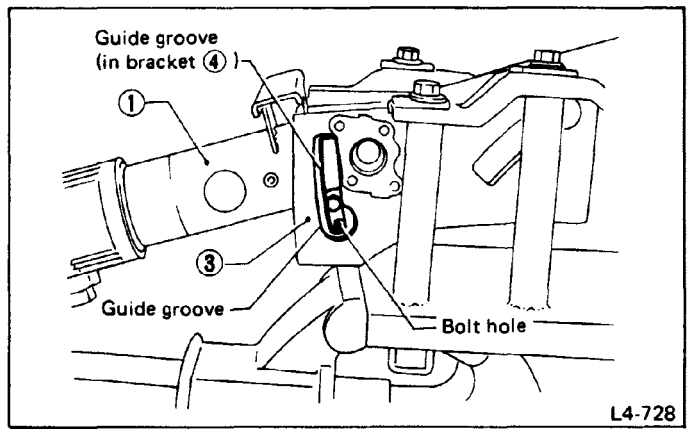

Fig. 50

a. Fit lock on flange of bolt ⑩ into guide groove in bracket ④.

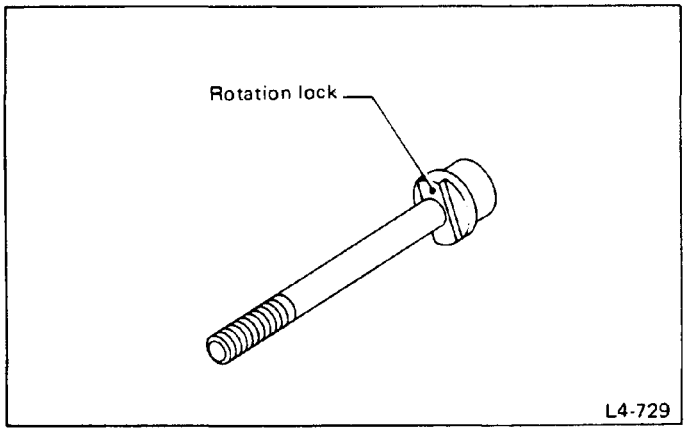

Fig. 51

b. Apply grease to bearing ⑤⓪ and guide grooves in brackets ③ and ④.

3) Install washer ⑨, bearing ⑧ and adjusting screw (tilt) ⑦ to bolt ⑩.

Apply grease to washer ⑨ and bearing ⑧.

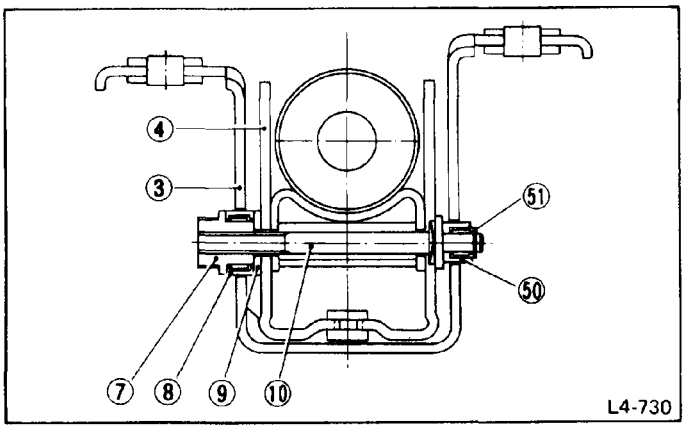

Fig. 52

4) Force down lower side of column ASSY and hold it on STAND with CLAMP (926720000). Then, align 20 mm (0.79 in) dia. hole in bracket ③ and tapered hole in bracket ④. Install memory pin ASSY ㉕.

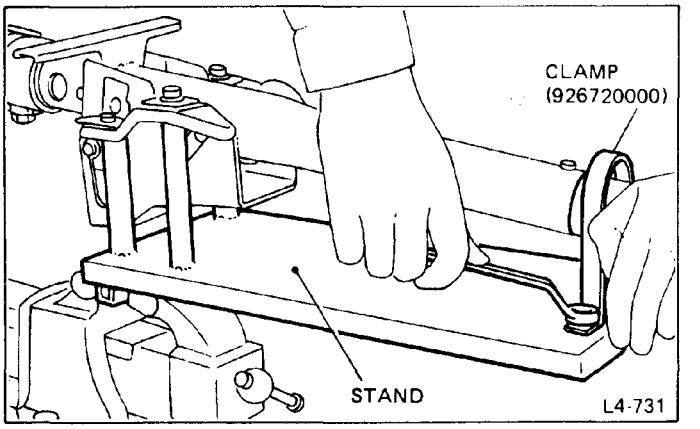

Fig. 53

Move upper side of column ASSY in this condition up and down several times to see if it moves smoothly.

ADJUSTMENT OF TILT TIGHTENING FORCE

1) Adjust engagement of lever (tilt) ⑤ so that lever knob is parallel with column center line when adjusting screw (tilt) is tightened with lever ⑤.

Adjusting screw tightening torque:
8 – 10 N·m (0.8 – 1.0 kg-m, 5.8 – 7.2 ft-lb)

After adjustment, install washer ⑨ and bolt ⑥.

Bolt tightening torque:
12 – 16 N·m (1.2 – 1.6 kg-m, 9 – 12 ft-lb)

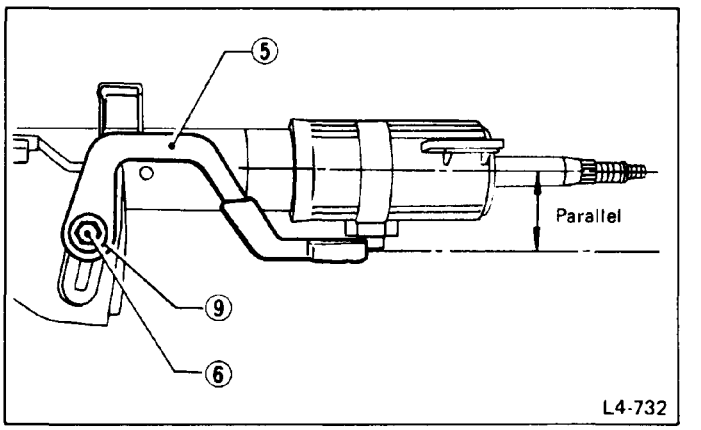

Fig. 54

Lock and unlock tilt function several times repeatedly to check that lever operates smoothly.

2) Ensure that steering column pops up and locks normally. To do this with tilt function locked, pull memory pin ASSY lever ㊸ in direction of arrow to allow column to pop up and then push column down to original position. Repeat several times.

Tilt function must be securely locked.

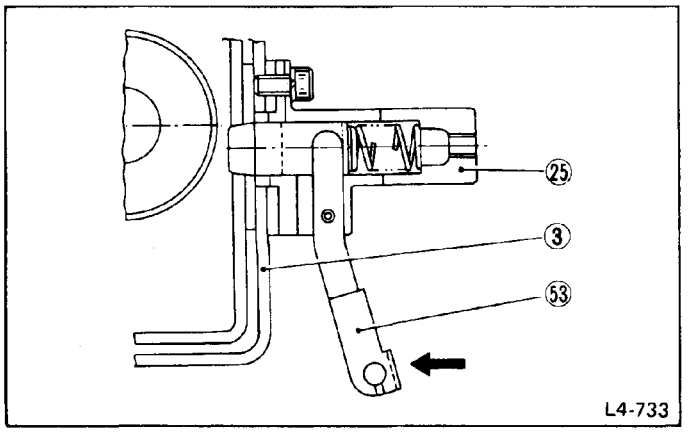

Fig. 55

3) After adjustment, move column ASSY to lowest tilt position, lock tilt lever, and tighten lock bolt from below column bracket.

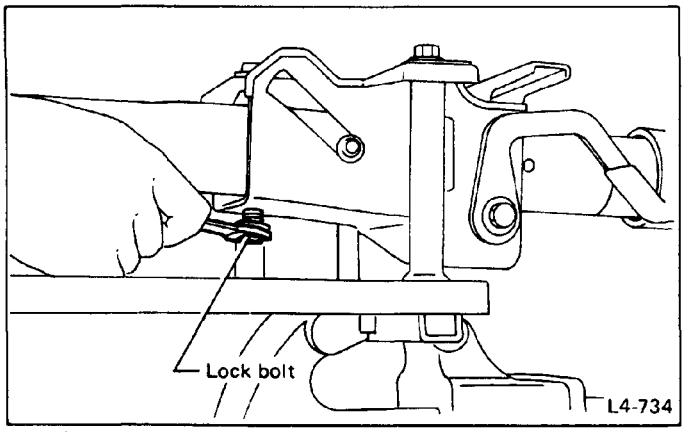

Fig. 56

ADJUSTMENT OF OPERATING EFFORT FOR TELESCOPING

1) Turn adjusting screw ⑲ until it makes contact, then back off 20 to 30 degrees. Tighten nut ⑳ while holding adjusting screw ⑲ stationary.

Tightening torque:
12 – 16 N·m (1.2 – 1.6 kg-m, 9 – 12 ft-lb)

Confirm that wing bracket has no play in rotational direction and little operating effort for telescoping is required. Readjust if necessary.

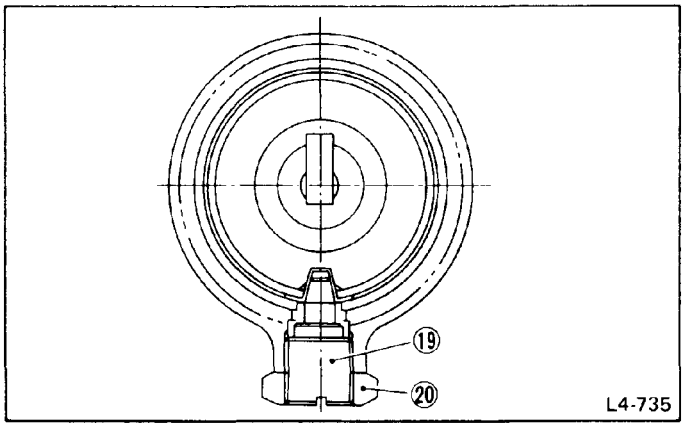

Fig. 57

2) Apply a small amount of grease to rod ⑮. Install rod ⑮ and lock shaft (telescopic) ⑯ to telescopic shaft ⑬. Then, tighten with telescopic lever ㉘. (This tightening may be performed after mounting steering column ASSY on vehicle.)

Tightening torque:
5 – 6 N·m (0.5 – 0.6 kg-m, 3.6 – 4.3 ft-lb)

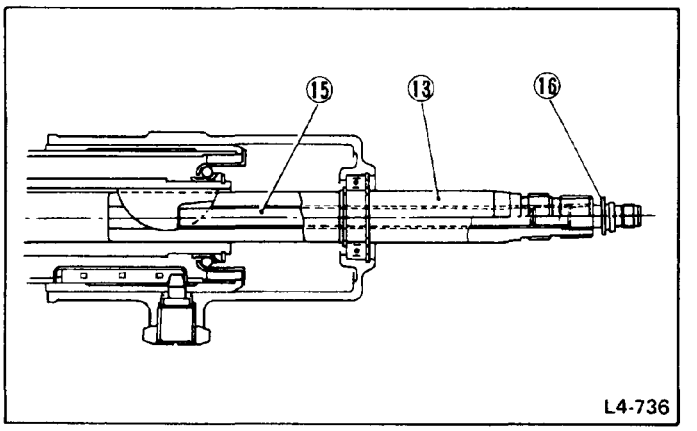

Fig. 58

COLUMN ASSEMBLY

1) Install control wing ASSY and combination switch ASSY to steering column ASSY.

Apply grease to sliding portion of combination switch and shaft.

2) Next, with telescopic shaft fully extended, install column cover, lower cover ASSY, and combination meter ASSY.

Nut tightening torque:
10 – 18 N·m (1.0 – 1.8 kg-m, 7 – 13 ft-lb)

Harness should be routed as shown below.

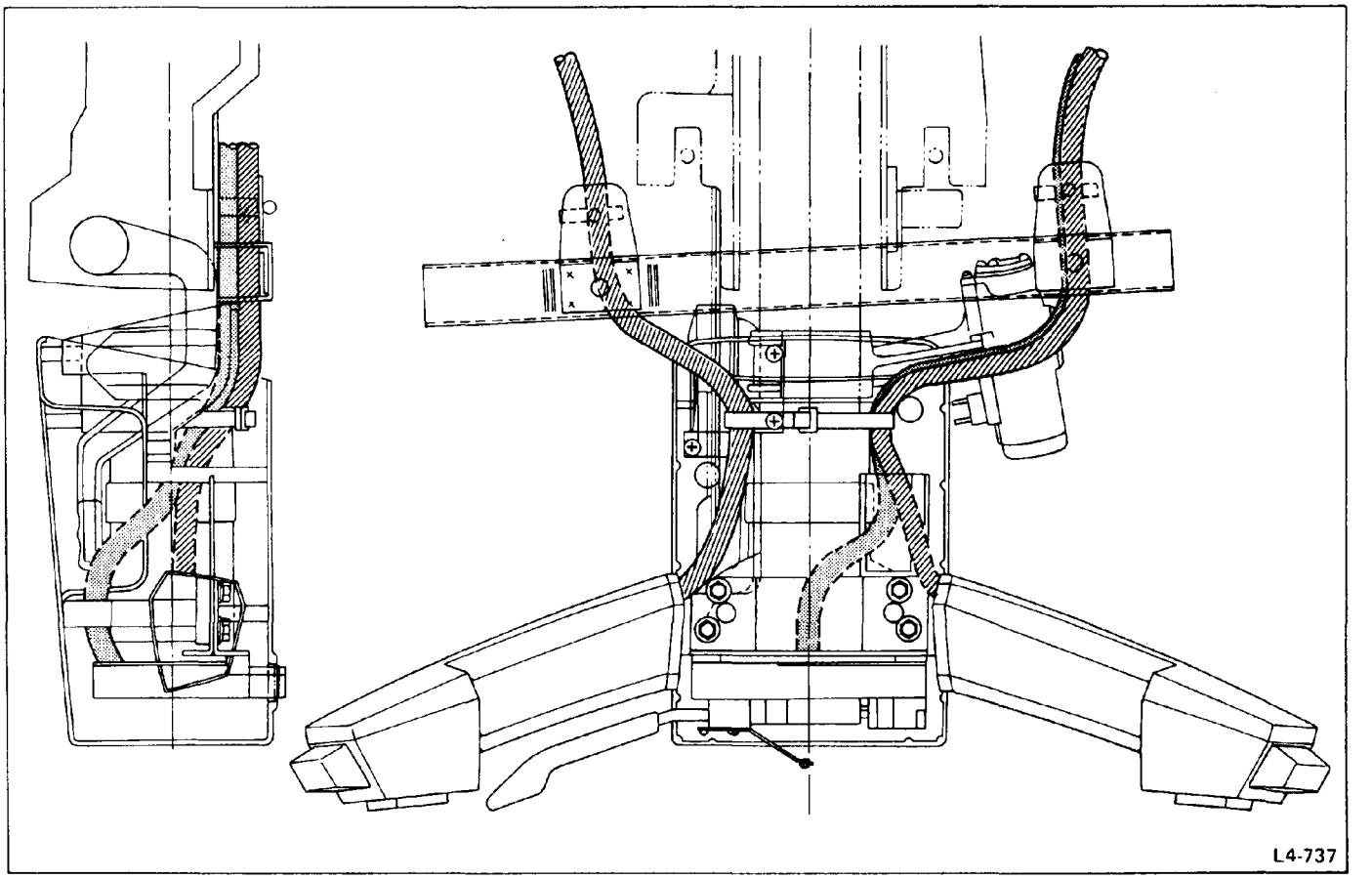

Fig. 59

3) Install steering sensor ⑱ using two screw sets ⑲.

Tightening torque:
1.3 – 1.7 N·m (0.13 – 0.17 kg-m, 0.9 – 1.2 ft-lb)

a. Adjust sensor plate through the access hole so that it is situated in the center of photo couplers. After installation, turn shaft to check that sensor plate does not come into contact with photo couplers.
b. Do not apply grease to photo couplers.

4) Route harness through steering sensor clip ⑳. Insert it into hole in column pipe and then secure it.

a. Always use new clips and fasten harness securely.
b. Be careful not to damage harness.

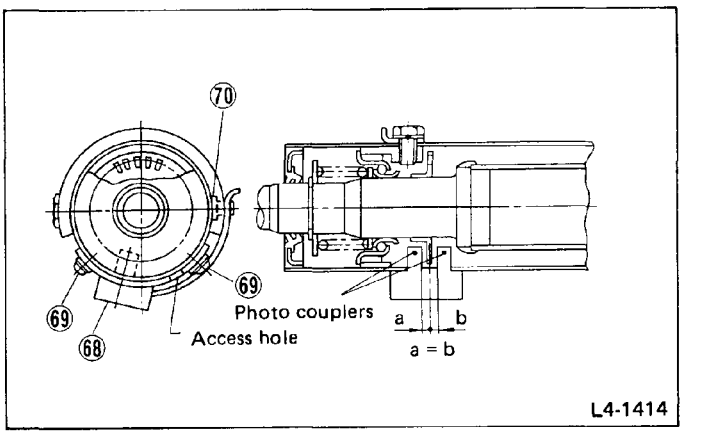

Fig. 60

INSTALLATION

1) Insert lower end of shaft ASSY pipe into toe board bushing, and temporarily tighten three bolts.
2) Remove lock bolt fastening column pipe and bracket (fix). Loosen tilt lever, move shaft up and down several times, and tighten tilt lever.
3) Tighten mounting bolts to specified torque.

Tightening torque:
20 – 29 N·m (2.0 – 3.0 kg-m, 14 – 22 ft-lb)

4) Operate lever of memory pin ASSY to check if shaft pops up. Also, check that shaft locks when it is pushed down.
5) Connect meter cable, harness and pop-up cable.
6) Install steering wheel.

Tightening torque:
29 – 39 N·m (3.0 – 4.0 kg-m, 22 – 29 ft-lb)

Clearance between column cover and steering wheel:
2 – 4 mm (0.08 – 0.16 in)

7) Install telescopic lever so that its knob is parallel with steering wheel spoke. Tighten nut temporarily.

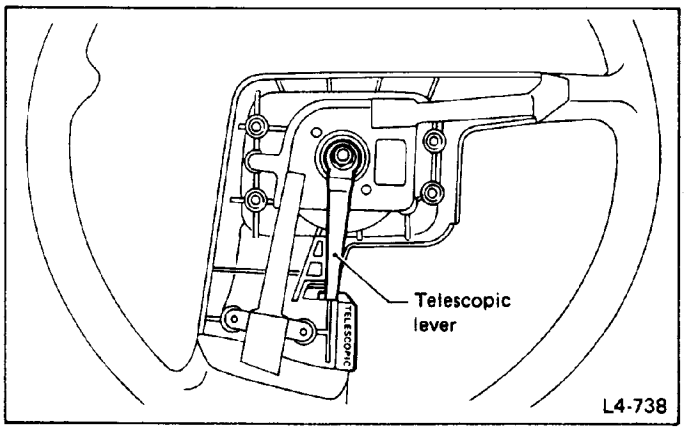

Fig. 61

8) Confirm that telescoping is performed smoothly when telescopic lever lock is released. Also, check that telescoping is locked securely when telescopic lever is locked.
9) Tighten nut to specified torque.

Tightening torque:
12 – 16 N·m (1.2 – 1.6 kg-m, 9 – 12 ft-lb)

Tighten nut while holding telescopic lever stationary.

10) Connect harness of pad ASSY and install pad ASSY to steering wheel.
11) Install universal joint.

Tightening torque:
21 – 26 N·m (2.1 – 2.7 kg-m, 15 – 20 ft-lb)

a. Ensure that each coupling bolt passes through the cutout at the serrated section of steering shaft or the one of gearbox pinion.
b. Install long yoke side to steering shaft and short yoke side to pinion.

Steering Gearbox (Manual Steering System)

REMOVAL

1) Remove ground cable from battery.
2) Apply parking brake.
3) Loosen front wheel nuts, jack up vehicle, and support on a rigid rack.
4) Release parking brake lever.
5) Remove front wheel.
6) Pull out tie-rod end cotter pin, remove castle nut and tie-rod end from knuckle arm by using a puller.
7) Remove pinch bolt from torque rod universal joint.

Never attempt to remove gearbox ASSY or crossmember with the pinch bolt fitted to torque rod universal joint.

8) Loosen exhaust manifold tightening nuts, and lower exhaust pipe.
9) Remove gearbox mounting bolts (four places).
10) Draw out gearbox ASSY toward pinion.
As pinion shaft comes off torque rod, rotate gearbox rearward and draw out toward pinion.

Be careful not to damage gearbox boot.

DISASSEMBLY

Before starting disassembly operation, measure the pinion rotating torque and backlash (adjust screw tightening angle) at the neutral position for reference during reassembling operation.

1) Secure gearbox ASSY in a vice using pad or a cloth for protection.

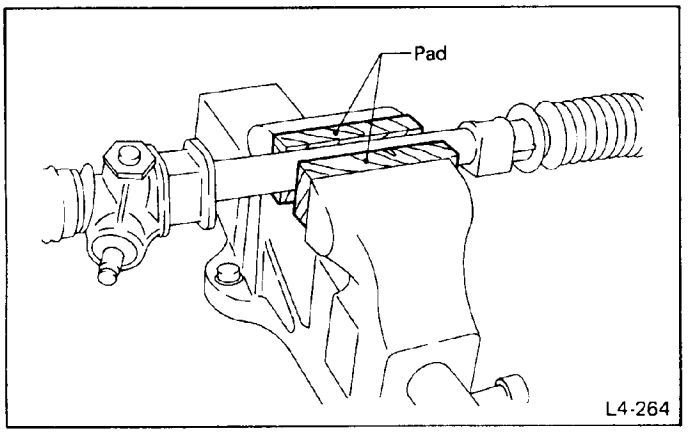

Fig. 62

2) Loosen tie-rod end lock nut, and remove tie-rod end and lock nut.

3) Remove quick-type clip from small end of boot using pliers.

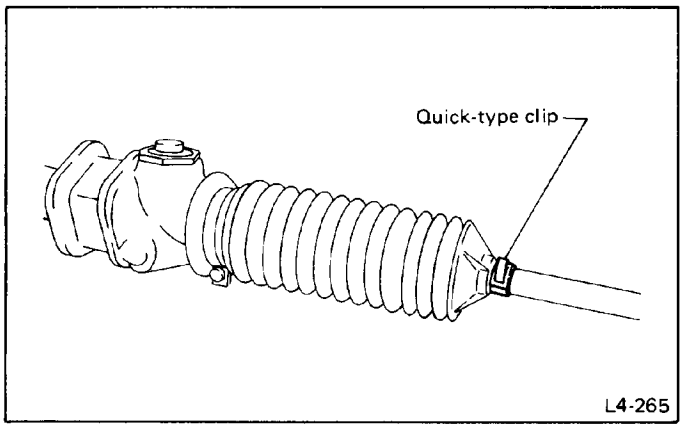

Fig. 63

4) Loosen big and boot clip screw with screwdriver, and remove clip.

5) Remove boot from gearbox.

Be careful not to damage boot.

6) Straighten ball joint lock washer using chisel or screwdriver.

7) Loosen ball joint, and remove tie-rod CP from rack.

Be sure to fix the rack with adjustable wrench to prevent it from rotating.

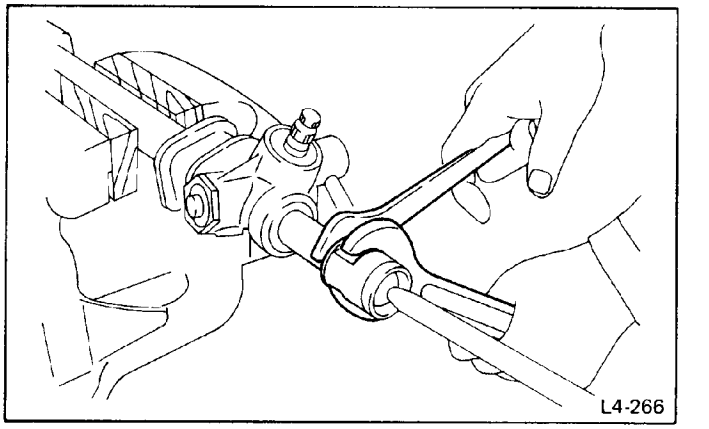

Fig. 64

8) Loosen adjust screw lock nut, and remove adjust screw.

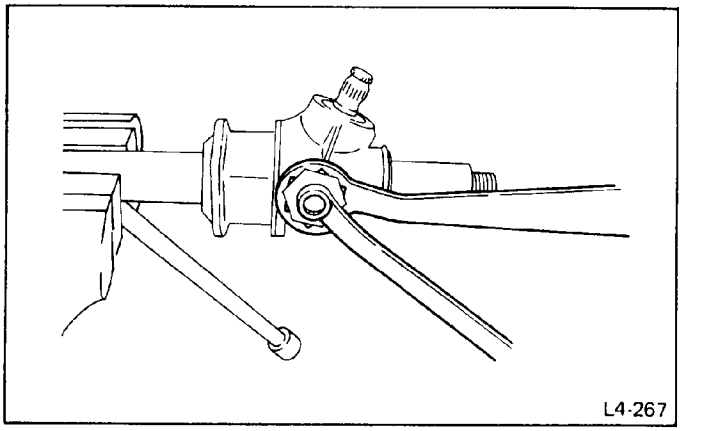

Fig. 65

9) Remove spring and sleeve.

10) Pull out pinion oil seal using screwdriver.

Be sure to replace oil seal with a new one.

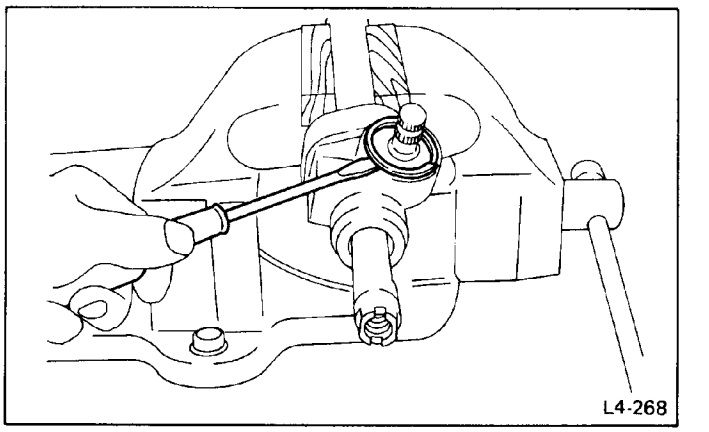

Fig. 66 VGR gearbox

11) Remove snap ring, and pull out pinion.

Be careful not to damage the inside surface of housing with snap ring or pliers.

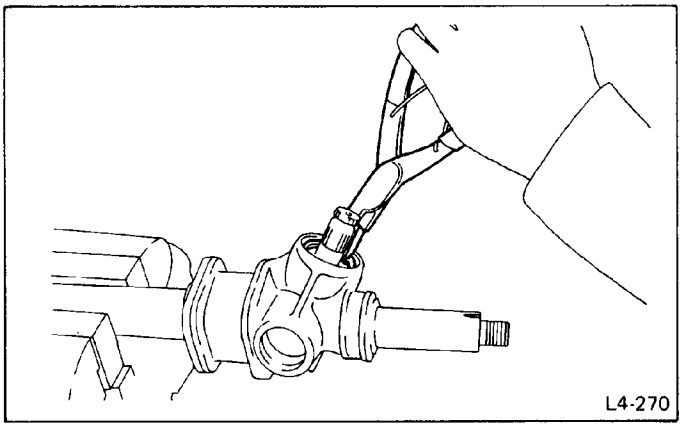

Fig. 67

12) Remove rack.

Be sure to pull the toothed side of rack outward so that bushing will not be damaged by the rack teeth.

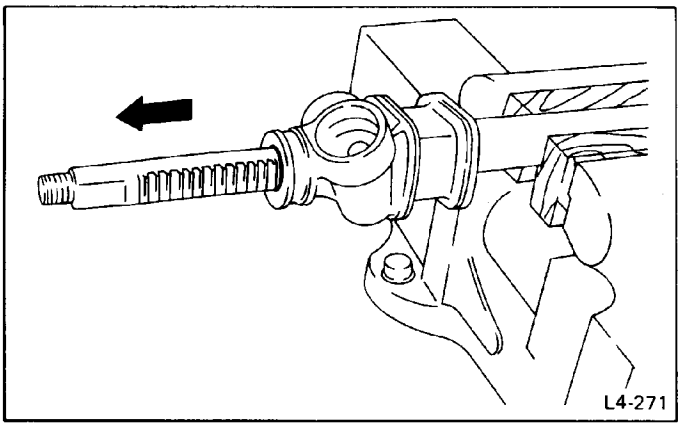

Fig. 68

13) Removal of bushing A.
Using press and REMOVER (926540000), press out outer retainer and bushing A from gearbox unit.

Be sure to replace bushing A and retainer with new ones.

INSPECTION

1) Clean all disassembled parts, and check for wear, damage, or any other fault, and repair or replace if necessary.
2) When diassembling, check the gearbox for water. If water is found, carefully check pinion oil seal, boot, and adjusting screw O-ring for sealing, and replace if faulty.

No.	Part Name	Inspection	Corrective action
1	Rack	• Faults on tooth face: Dent, wear, cracks, and other damages. • Bend in rack shaft 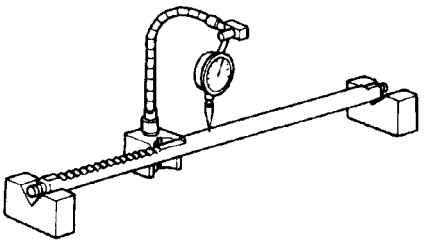 *Fig. 69* A18-068 **Limit: 0.2 mm (0.008 in) (runout)**	Replace rack and pinion ASSY as a unit.
2	Pinion ASSY	• Faults on pinion tooth face: Dent, wear, cracks, and other damages. • Ball bearing: Free play, noise, binding • Snap ring: Deformation	Replace pinion ASSY and rack as a unit. When replacing, be sure to use SUBARU genuine parts. Replace.
3	Oil seal	———	Always replace when oil seal is removed.
4	Snap ring (Big)	• Deformation	Be sure to use SUBARU genuine parts.
5	Gearbox unit	• Cracks or other damage in aluminium die-cast • Cracks, bend, or deformation in pipe • Displaced needle bearing roller • Wear or damage on bushing A • Wear or deterioration of adapters A and B	Replace gearbox unit. Replace. Replace.
6	Boot	• Cracks, damage, or deterioration	Replace.
7	Tie-rod CP	• Free play in ball joint • Bend in tie-rod	Replace. Replace.
8	Lock washer	———	Always replace when it is removed.
9	Tie-rod end	• Damage or deterioration in dust seal	Replace.
10	Sleeve spring	• Fatigue **Free length (standard): 20.3 mm (0.799 in)**	Replace.

No.	Part Name	Inspection	Corrective action
11	O-ring	• Damage	Replace.
12	Sleeve	• Interference with rack • Damage	Replace.

ASSEMBLY

Use only SUBARU genuine grease for gearbox.

Specified grease for gearbox
VALIANT GREASE M2 [Parts No. 003608001, net 0.5 kg (1.1 lb)]

1) Install bushing A.
(1) Insert bushing A, and push it into pipe using INSTALLER (926530000).

Be careful not to damage inside surface of bushing.

(2) Insert retainer into pipe using INSTALLER (926530000) until INSTALLER contacts pipe end face.

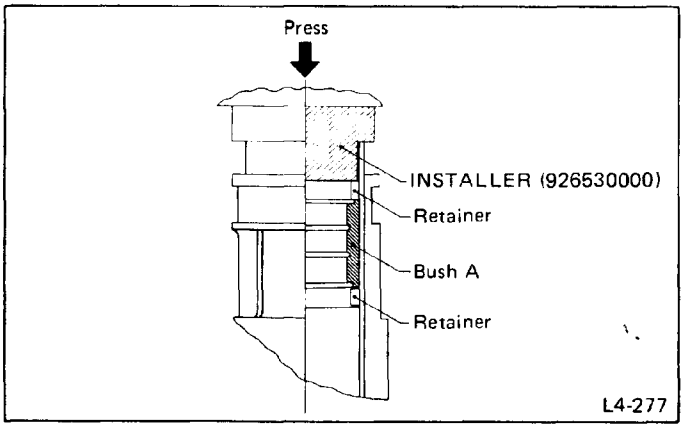

Fig. 70

2) Apply grease to sliding portions of both bushing A and pinion bushing inside gearbox unit. And also apply grease to the sliding portion and teeth portion of rack, then insert rack into gearbox unit.

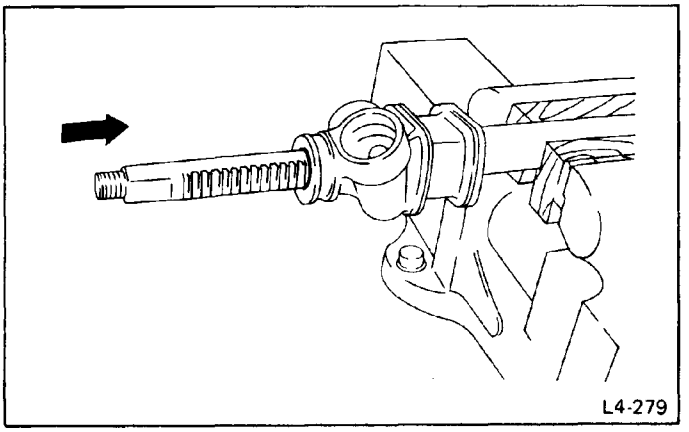

Fig. 71

a. Do not use any grease other than that recommended. Use of improper grease may result in poor lubrication, deteriorated or corroded parts, or other faults.
b. Be sure to insert rack from the pinion side (aluminum die-cast side), being careful not to damage bushing.

3) Apply grease to sliding surface and root of pinion ASSY teeth, and also to ball bearing, then insert pinion ASSY into gearbox.

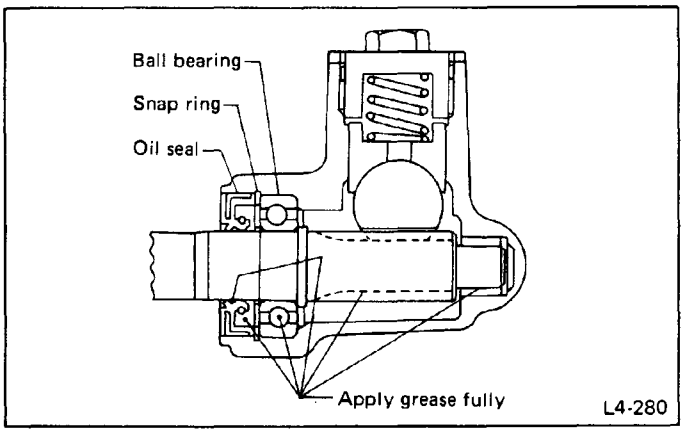

Fig. 72

4) Fit snap ring into snap ring groove of case to secure ball bearing.

After inserting snap ring, confirm that snap ring turns smoothly for checking of proper installation.

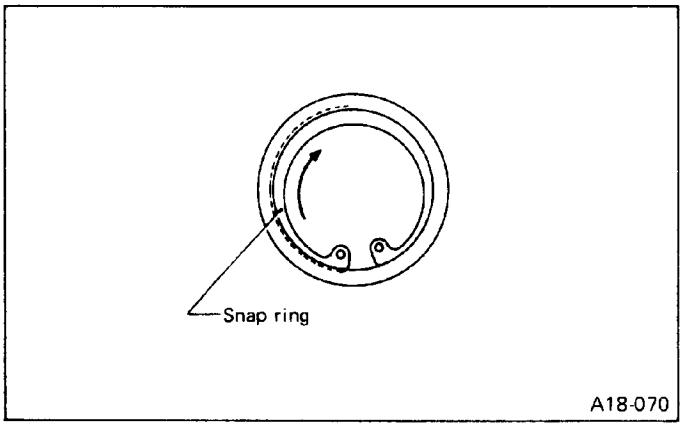

Fig. 73

5) Measure axial play of pinion using dial gauge.

Limit of axial play:
0.3 mm (0.012 in)

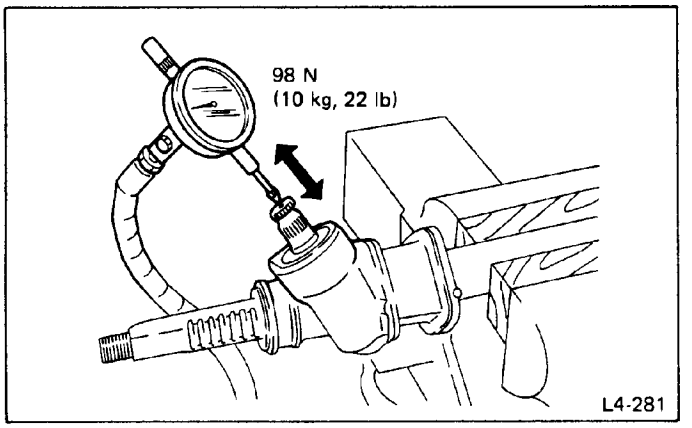

Fig. 74

6) Press-fit oil seal.

Excessively large clearance between oil seal flange and gearbox may be attributable to an incorrectly fit snap ring. Pull out oil seal, and check installation of snap ring.

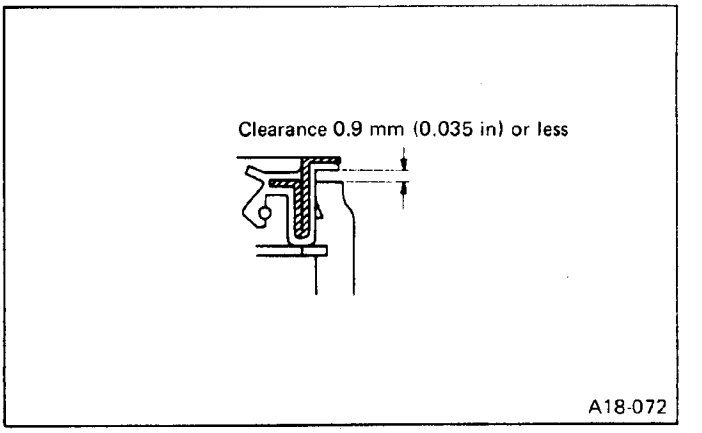

Fig. 75

7) Install sleeve ① and spring ②, in that order, into gearbox, and screw in adjusting screw ③.

Pack grease abundantly into sleeve.

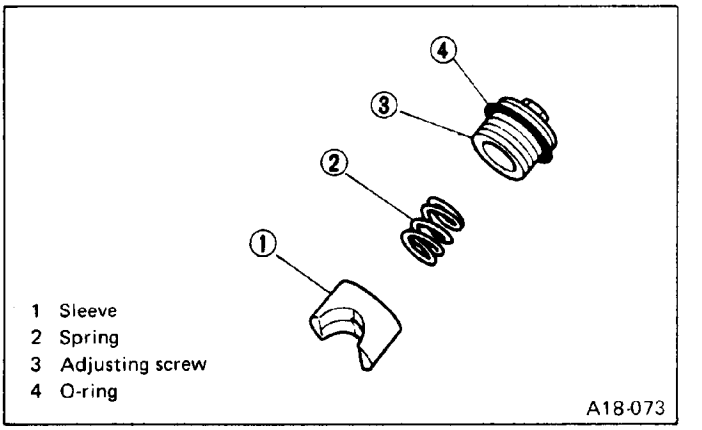

Fig. 76

Tightening torque (Lock nut):
29 – 49 N·m (3.0 – 5.0 kg-m, 22 – 36 ft-lb)

Hold the adjusting screw with a wrench to prevent it from turning while tightening the lock nut.

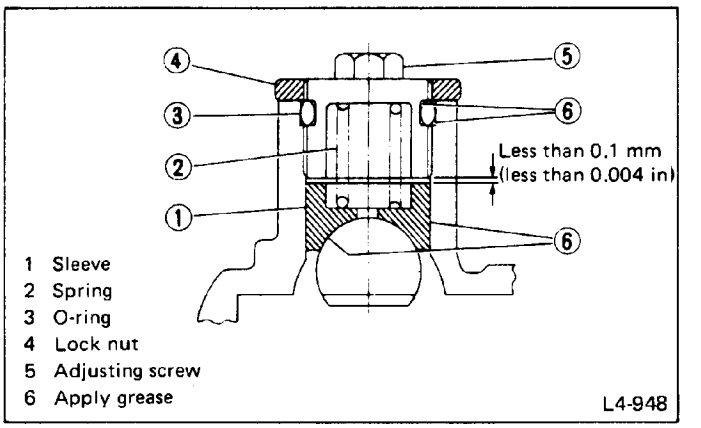

Fig. 77

8) Tighten adjusting screw to 7.4 N·m (0.75 kg-m, 5.4 ft-lb) and then loosen it. Repeat this operation twice. Finally tighten adjusting screw to 7.4 N·m (0.75 kg-m, 5.4 ft-lb) and back off 25°.

9) Check the engaging condition of rack and pinion by turning the pinion with hand. If turning is unusually heavy or harsh, readjust backlash. Put the rack and pinion in straight-ahead drive position, paint marking on the pinion shaft and oil seal.

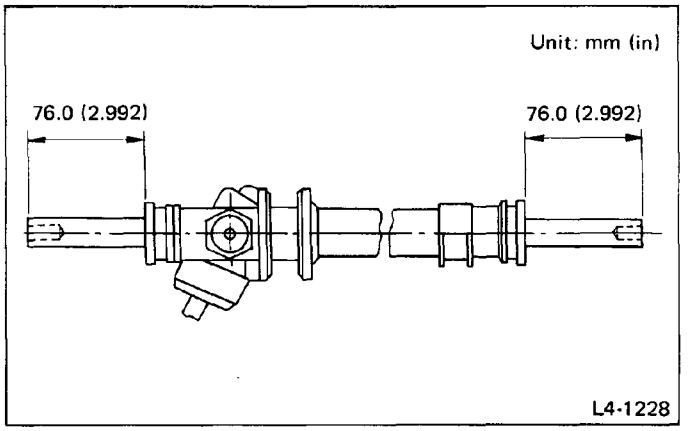

Fig. 78

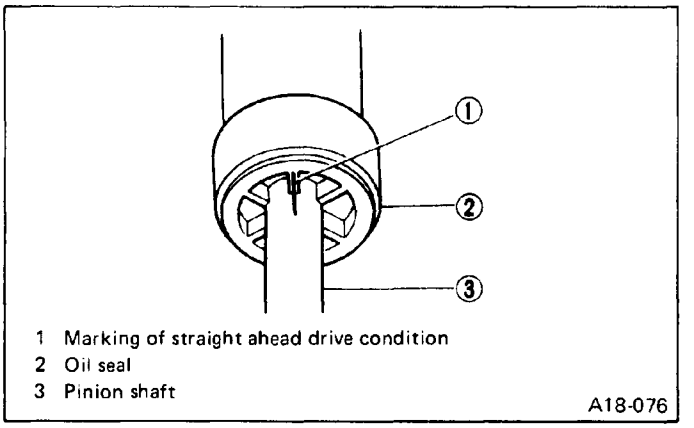

Fig. 79

10) Fit the lock washer on the screwed portion of the rack end.

Aligning the cut portion of rack and the nail of washer, screw in and tighten ball joint ASSY.

Tightening torque (Ball joint):
78 N·m (8.0 kg-m, 58 ft-lb)

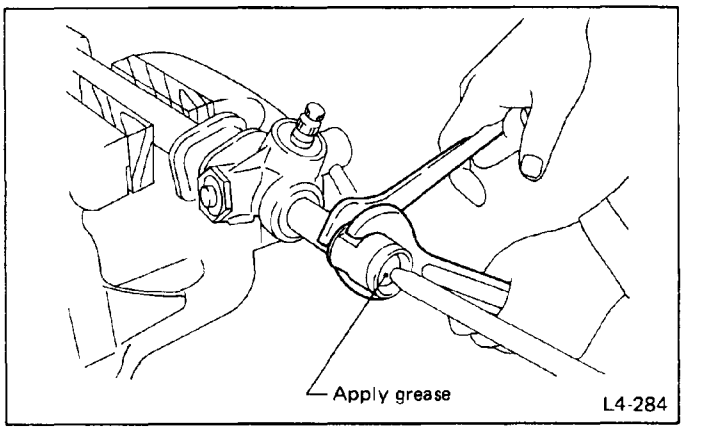

Fig. 80

Hold the rack with a wrench to prevent it from turning while tightening the ball joint.

11) Stake lock washer so that tie-rod CP socket will not become loose with respect to rack.

Stake lock washer against recess of tie-rod socket. (Two places each)

Do not leave sharp edges on the corner after staking, or allow any portion of lock washer to protrude from the socket.

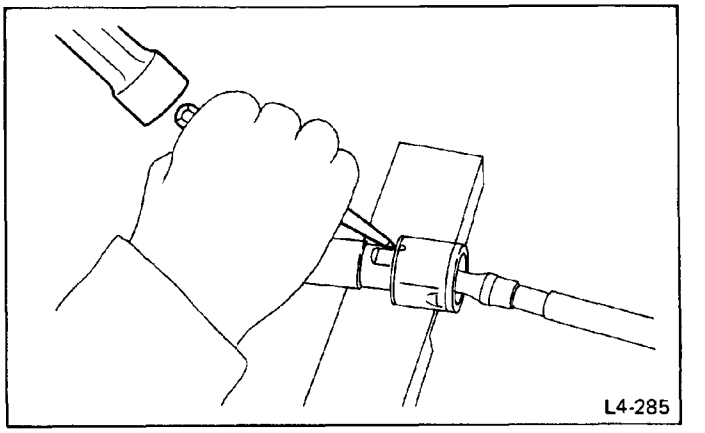

Fig. 81

12) Apply grease to the specified portion of the boot and then install it to gearbox.
After installing, confirm that the whole of boot turns smoothly.

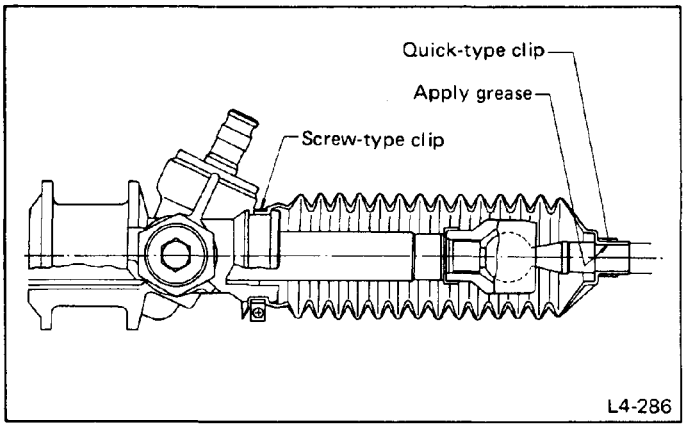

Fig. 82

a. Before installation of boots, draw out rack until maximum turning position and then apply grease again to the teeth and the sliding portion of rack for both sides.
b. Install the fitting portions of boots to the following portions in both sides of assembled steering gearbox.
- **The groove on gearbox or the groove on adaptor.**
- **The groove on tie-rod.**

c. Check boot is installed without unusual inflation or deflation.

13) Tighten screw-type clip on big end of boot.
14) Attach quick-type clip to small end of boot using pliers.
15) Screw in the lock nut and tie-rod end to the screwed portion of tie-rod and tighten the lock nut temporarily in a position shown in figure.

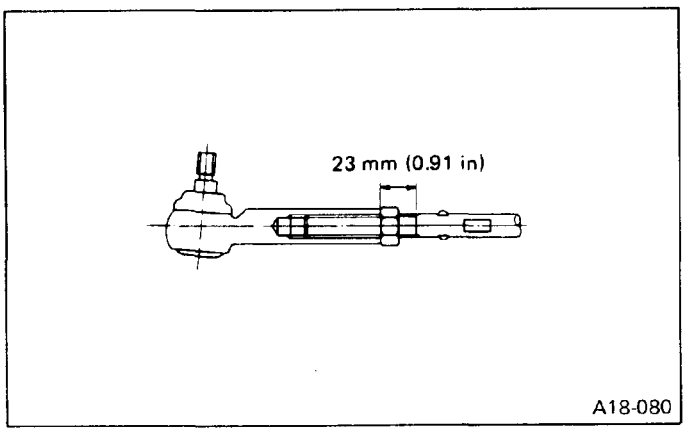

Fig. 83

Pay attention to the difference between the right and left tie-rod ends.

Identification mark	Right one	RH
	Left one	LH

16) Confirm the operation of the pinion by turning round it.

Pinion rotating torque:
Straight-ahead position within ±30 mm (1.18 in) from rack center
Less than 0.9 N·m (0.09 kg-m, 0.7 ft-lb)
Maximum allowable torque
1.4 N·m (0.14 kg-m, 1.0 ft-lb)

a. If rack and pinion have been replaced, move rack back and forth several strokes by holding tie-rod to ensure smooth movement.
b. If pinion rotating torque exceeds the specified value, back off the adjusting screw within the range of 20° from its fully tightened position, and adjust the backlash again.
c. While rotating the pinion, also check the boot, and make sure the gearbox is properly ventilated.

INSTALLATION

1) Insert gearbox into crossmember from driver's seat side, and insert pinion shaft into torque rod universal joint.

Be careful not to damage gearbox boot.

2) Fit gearbox to crossmember bracket, and tighten clamp with bolts.

Tightening torque:
47 – 71 N·m (4.8 – 7.2 kg-m, 35 – 52 ft-lb)

Be sure to tighten the clamp from the pinion side.

3) Insert pinch bolt into torque rod universal joint, and tighten to the specified torque.

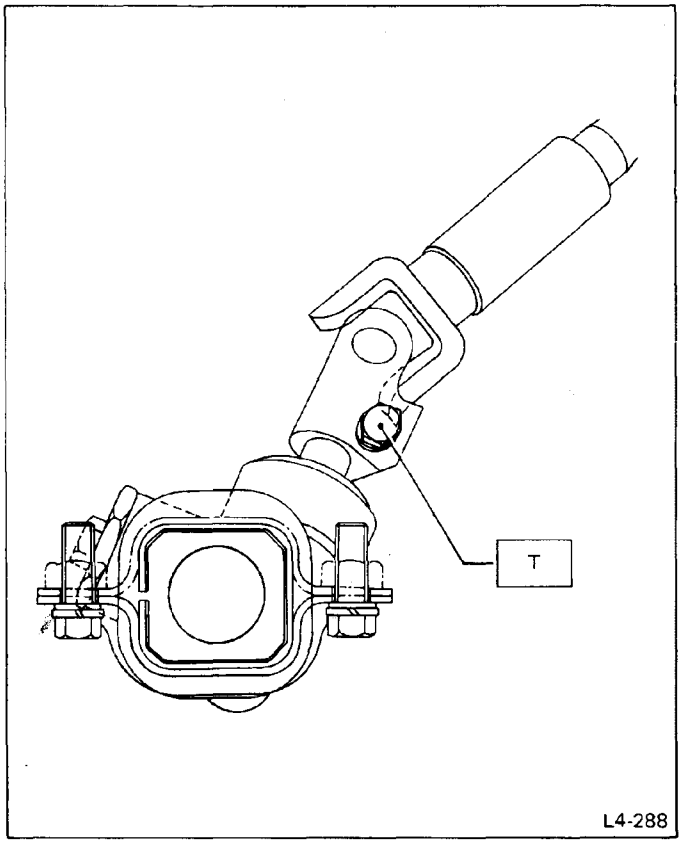

Fig. 84

Tightening torque:
21 – 26 N·m (2.1 – 2.7 kg-m, 15 – 20 ft-lb)

a. Be sure to use SUBARU genuine pinch bolt (7T).
b. Never attempt to remove gearbox ASSY or crossmember with pinch bolt fitted to universal joint.

4) Connect tie-rod end and knuckle arm, and tighten castle nut, then insert cotter pin and bend to lock the nut.

Tie-rod end castle nut tightening torque:
Tighten to 25 – 29 N·m (2.5 – 3.0 kg-m, 18 – 22 ft-lb), then tighten further within 60° until cotter pin hole is aligned with a slot in the nut.

Do not hit the cap at the bottom of tie-rod end with a hammer when connecting knuckle arm.

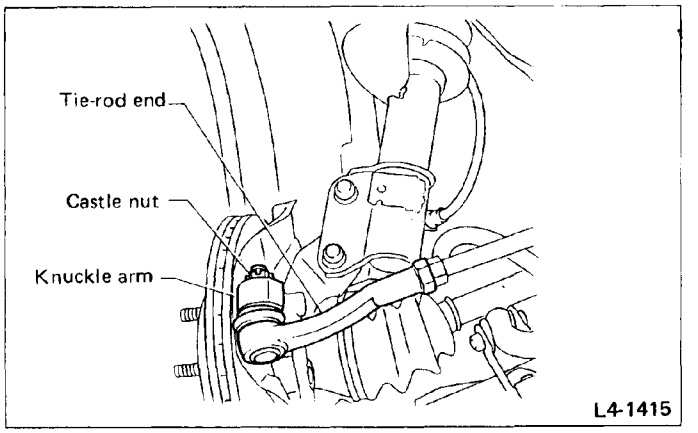

Fig. 85

5) Tighten exhaust manifold.
6) Install tires, and lower front body of vehicle.
7) Tighten wheel nuts to the specified torque.
8) Connect ground cable to battery.

ADJUSTMENT OF TOE, AND CHECK AND ADJUSTMENT OF BACKLASH

TOE ADJUSTMENT

1) Set gearbox rack at the center position by turning steering wheel until white paint marks on gearbox and pinion are aligned correctly.

a. To adjust wheel alignment, be sure to place the vehicle on a level surface.
b. The front suspension and steering system must be in their normal states, and wheel runout and tire inflation pressure must be kept within the specifications.

2) Under above conditions, loosen tie-rod lock nut, and turn tie-rod to adjust front toe.

Standard of front toe
2WD:
OUT 1 – IN 1 mm (OUT 0.04 – IN 0.04 in)
4WD:
IN 1 – IN 3 mm (IN 0.04 – IN 0.12 in)

One rotation of both tie-rods:
Change in toe: Approx. 12 mm (0.47 in)

a. Both the left and right tie-rods are right-hand threaded. To increase toe, turn both tie-rods counterclockwise equal amounts (as viewed from the outside of the vehicle).

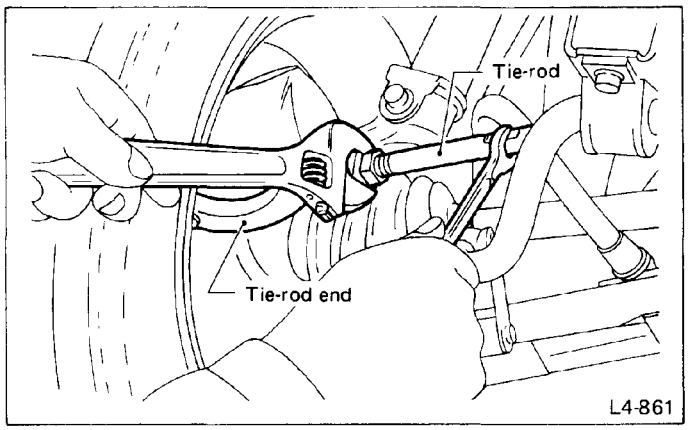

Fig. 86

b. When adjusting toe, hold the boot or remove its small end clip so that the boot will be twisted.

3) Check and adjust steering angle of wheels.

Steering angle
Inner wheel: 38° ± 1.5°
Outer wheel: 34.5° ± 1.5°

4) After completing adjustment of toe and steering angle, tighten lock nut on tie-rod end.

Lock nut tightening torque:
69 – 88 N·m (7.0 – 9.0 kg-m, 51 – 65 ft-lb)

a. When tightening lock nut, be sure to hold tie-rod end socket.
b. Straighten boot if twisted, and correctly install the clip.

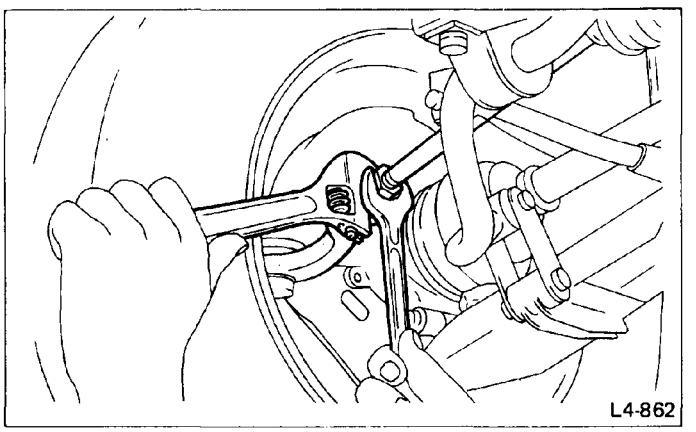

Fig. 87

5) After completing the above-mentioned adjustment, check whether the steering wheel spokes are in the horizontal position with wheels set in the straight-ahead position. If the spokes are inclined more than 5° [approx. 17 mm (0.67 in) on the outer periphery of steering wheel], re-install the steering wheel to the horizontal position.
6) If the steering wheel position is unsatisfactory even after the wheel has been reinstalled, make correction by turning the right and left tie-rods in the same direction by the same amount.

A 1/4 turn of tie-rod corresponds to approx. 10 mm (0.39 in) on the steering wheel outer periphery.

INSPECTION AND ADJUSTMENT OF BACKLASH

Inspection and adjustment procedures of gear backlash with the steering gearbox mounted on vehicle are as follows:

Inspecting backlash

1) Get into vehicle with tires placed on ground.
2) Quickly turn steering wheel back and forth by a small amount.

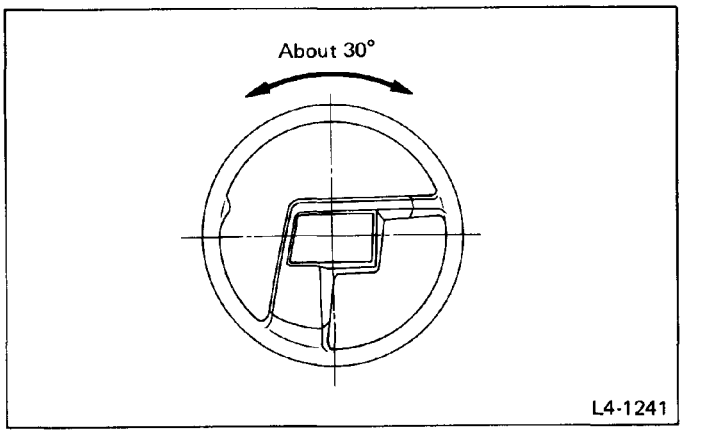

Fig. 88

3) While turning steering wheel, listen for backlash noise that may be generated from the engaged portion of gears.
4) Jack up the vehicle, and support on rigid racks.
5) Holding pinion side tie-rod from underside, move it up and down by force, and check for excessive play.

If excessive loud noise or large play is noticed, adjust gear backlash, proceeding as follows.

Adjusting backlash

1) Set steering wheel in the straight-ahead position.
2) Loosen lock nut using LOCK NUT WRENCH (925640000).

3) Turn adjusting screw to adjust gear backlash. After adjustment, tighten lock nut.

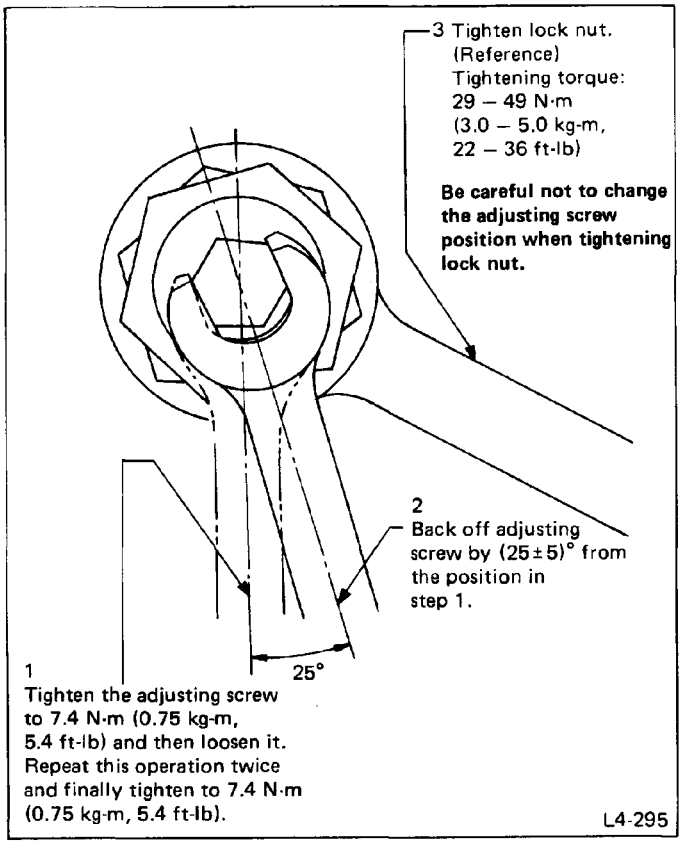

Fig. 89

4) Check backlash by repeating procedure as specified in "Inspecting backlash" above to ensure proper adjustment.

After completing backlash adjustment, turn steering wheel to the extreme right and left positions to check for proper steering feel with the vehicle jacked up. If unsmooth movement or binding is felt, it may be attributable to improperly adjusted backlash; repeat backlash adjustment.

Steering Gearbox (Power Steering System)

For disassembly and assembly of gearbox unit, refer to section Control Valve (Power Steering Gearbox).

REMOVAL

1) Disconnect thermo sensor connector.
2) Lift up vehicle.
3) Remove front wheels.
4) Remove front exhaust pipe ASSY.
(Refer to "EXHAUST SYSTEM".)
5) Using a puller, remove tie-rod end from knuckle arm after pulling off cotter pin and removing castle nut.

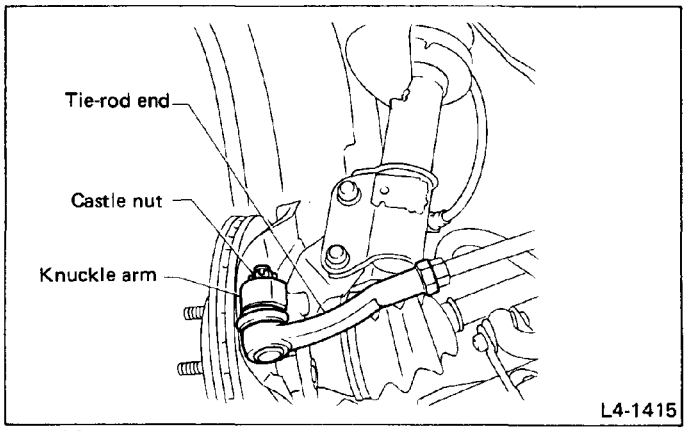

Fig. 90

6) Remove jack-up plate and clamp A.

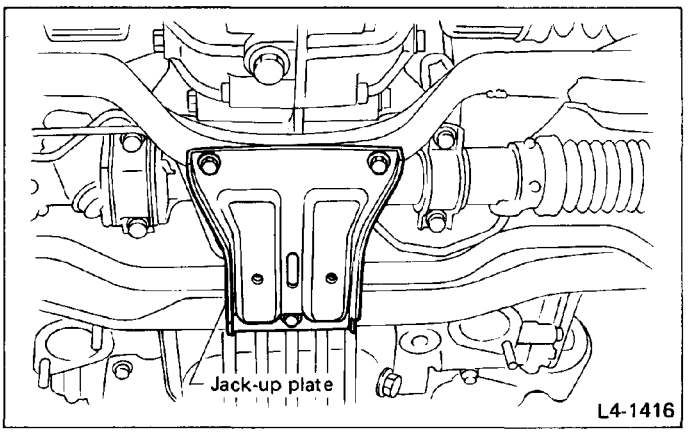

Fig. 91

7) Remove one pipe joint at the center of gearbox ASSY, and connect vinyl hose to pipe and joint. Discharge fluid by turning steering wheel fully clockwise and counterclockwise. Discharge fluid similarly from the other pipe.

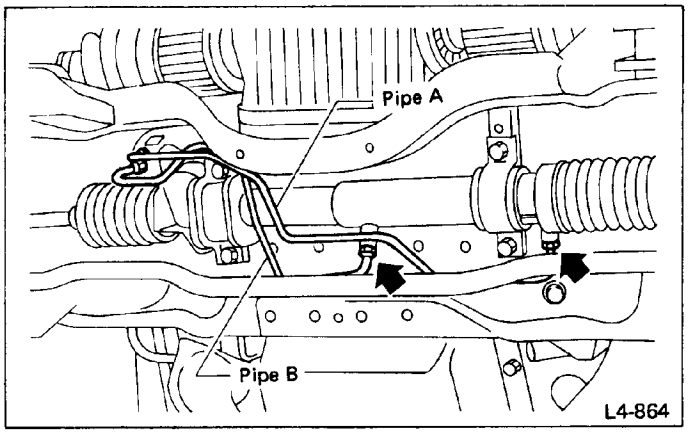

Fig. 92

8) Remove lower side bolt of universal joint ASSY, then remove upper side bolt and lift the joint ASSY upward.

Place a mark on the joint and mating serration so that it can be reinstalled at the original position.

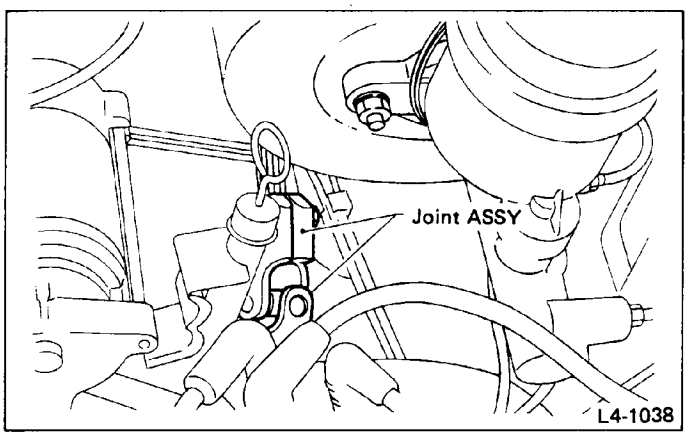

Fig. 93

9) Disconnect pipes C and D from control valve of gearbox ASSY.

a. Disconnect upper pipe D first, and lower pipe C second.
b. Be careful not to damage these pipes.

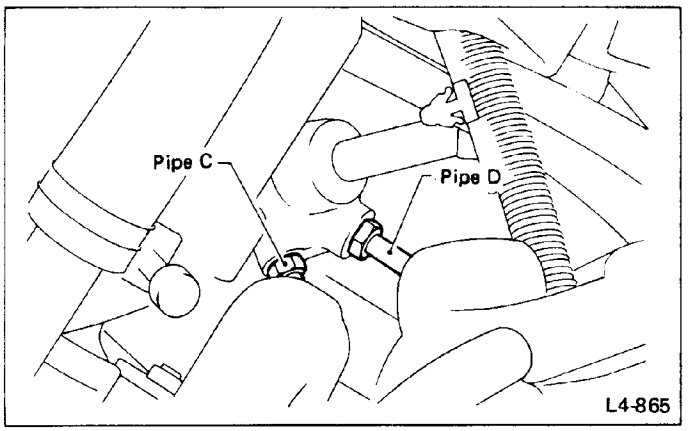

Fig. 94

10) Disconnect pipes A and B from lower side of control valve of gearbox ASSY.

a. Disconnect lower pipe A first, and upper pipe B second.
b. Be careful not to damage pipes.

11) Remove bolts securing gearbox ASSY to crossmember, and remove gearbox ASSY.

DISASSEMBLY

1) Secure gearbox removed from vehicle in vice using STAND (926200000).

Secure the gearbox ASSY in a vice using the special tool as shown. Do not attempt to secure it without this special tool. Use two pieces of manual steering gearbox clamp B (31026GA240).

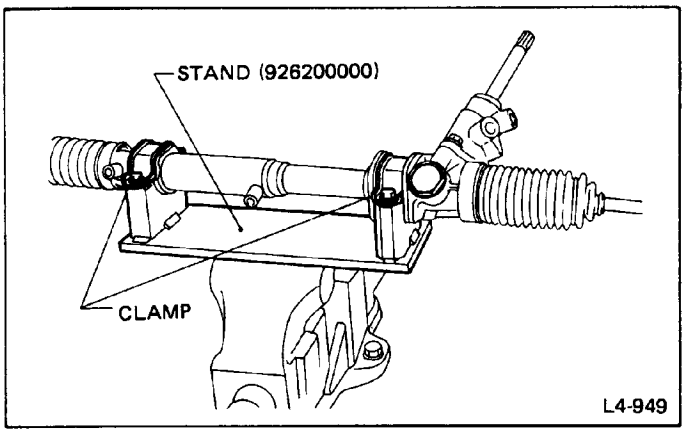

Fig. 95

2) Remove clip from boot, and move boot to tie-rod end side.

Remove clip from boot using screwdriver, being careful not to damage the boot and clip.

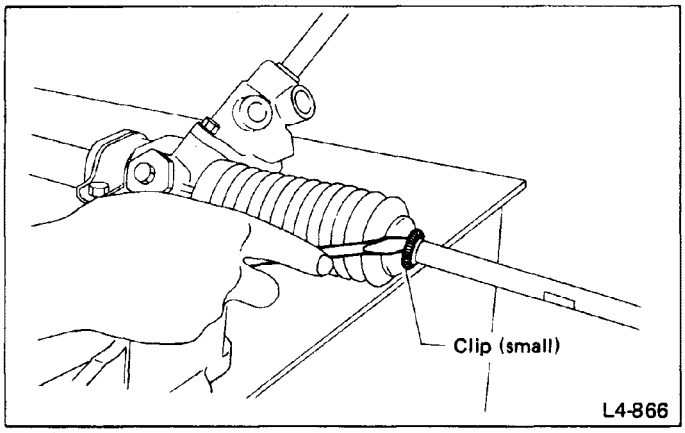

Fig. 96

3) Remove boot together with big clips.

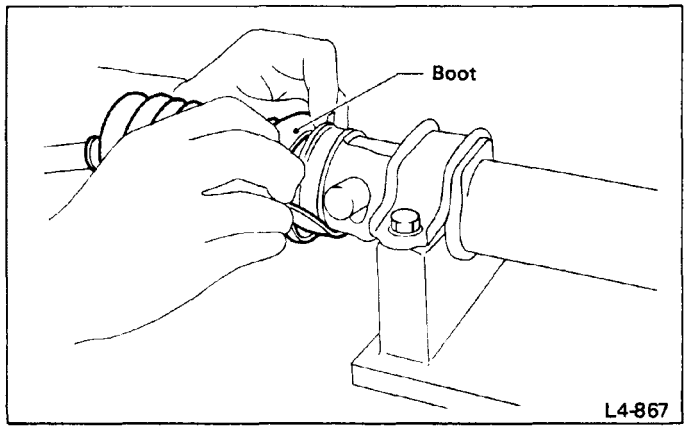

Fig. 97

4) Push rack fully into gearbox, and straighten tie-rod lock washer using chisel.

Be extremely careful not to hit the surface of right-hand rack; otherwise, oil leakage may result.

5) Loosen ball joint using WRENCH (925700000) and SPANNER (926230000), and remove tie-rod CP from rack.

When loosening ball joint, securely fix the rack using special tool.

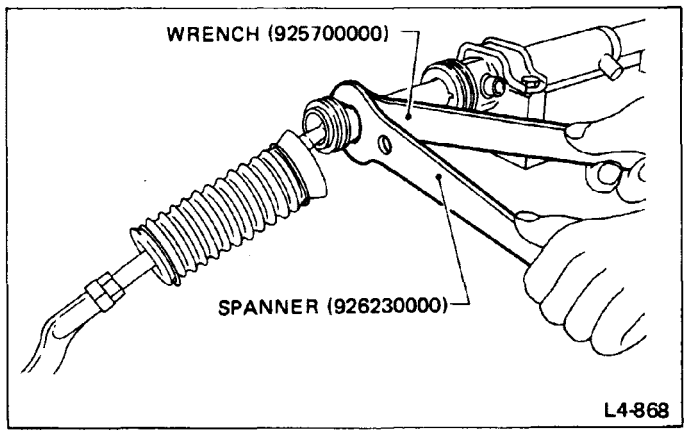

Fig. 98

6) Loosen lock nut using SPANNER (926230000), and remove adjusting screw.

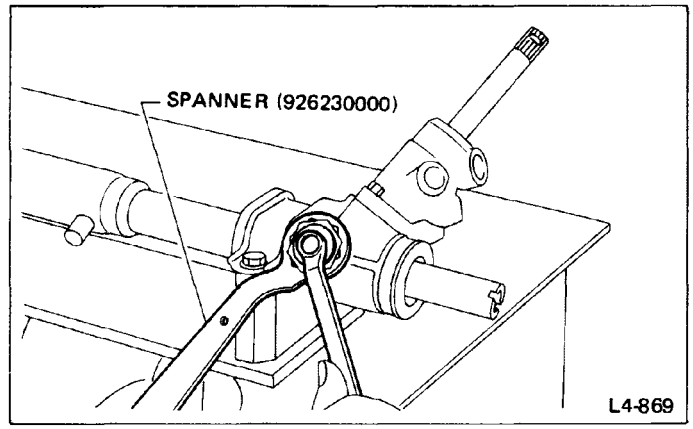

Fig. 99

7) Remove spring and sleeve.
8) Remove dust seal or dust cover.

Be careful not to damage housing and input shaft or to allow entry of foreign matter when removing dust cover.

INSPECTION

1) Clean all disassembled parts, and check for wear, damage, or any other faults, then repair or replace as necessary.
2) When disassembling, check inside of gearbox for water. If any water is found, carefully check boot for damage, input shaft dust seal, adjusting screw O-ring, and boot clips for poor sealing. If faulty, replace with new parts.

No.	Parts	Inspection	Corrective action
1	Input shaft	(1) Bend of input shaft (2) Damage on serration	If bend or damage is excessive, replace entire gearbox ASSY.
2	Dust cover	(1) Crack or damage (2) Wear	If outer wall slips, inner wall slips, lip is worn out or damage is found, replace it with new one.
3	Rack and pinion	Poor mating of rack with pinion	(1) Adjust backlash properly. By measuring turning torque of gearbox and sliding resistance of rack, check if rack and pinion engage uniformly and smoothly with each other. (Refer to "Service limit".) (2) Keeping rack pulled out all the way so that all teeth emerge, check teeth for damage. Even if abnormality is found in either (1) or (2), replace entire gearbox ASSY.
4	Gearbox unit	(1) Bend of rack shaft (2) Bend of cylinder portion	Replace gearbox ASSY with new one.
		(3) Crack or damage on aluminum alloy portion	
		(4) Wear or damage on rack bush	If free play of rack shaft in radial direction is out of the specified range, replace gearbox ASSY with new one. (Refer to "Service limit".)
		(5) Wear on input shaft bearing	If free plays of input shaft in radial and axial directions are out of the specified ranges, replace gearbox ASSY with new one. (Refer to "Service limit".)
5	Boot	Crack, damage or deterioration	Replace.
6	Tie-rod CP	(1) Looseness of ball joint (2) Bend of tie-rod	Replace.
7	Tie-rod end	Damage or deterioration on dust seal	Replace.
8	Adjusting screw spring	Deterioration	Replace.
9	Boot clip	Deterioration	Replace.
10	O-ring of adjusting screw	Crack, damage or deterioration	Replace.
11	Sleeve	Damage	Replace.
12	Pipes	(1) Damage to flared surface (2) Damage to flare nut (3) Damage to pipe	Replace.

SERVICE LIMIT

Make a measurement as follows. If it exceeds the specified service limit, adjust or replace.

When making a measurement, vise gearbox by using special tool (STAND; 926200000). Never vise gearbox with inserting aluminum plates etc. between vise and gearbox.

Sliding resistance of rack shaft

Service limit:
245 N (25 kg, 55 lb) or less

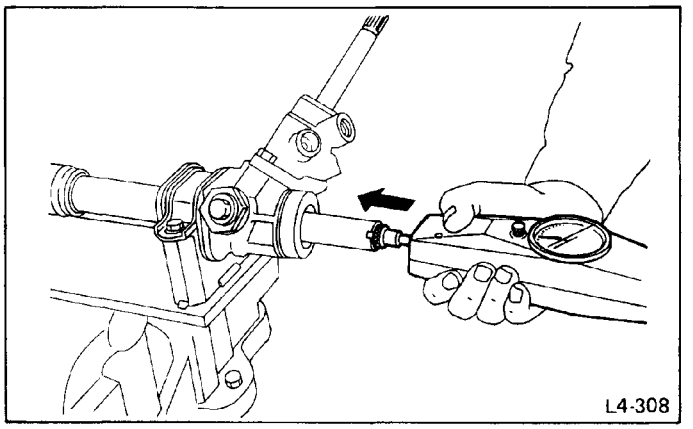

Fig. 100 Right-turn steering

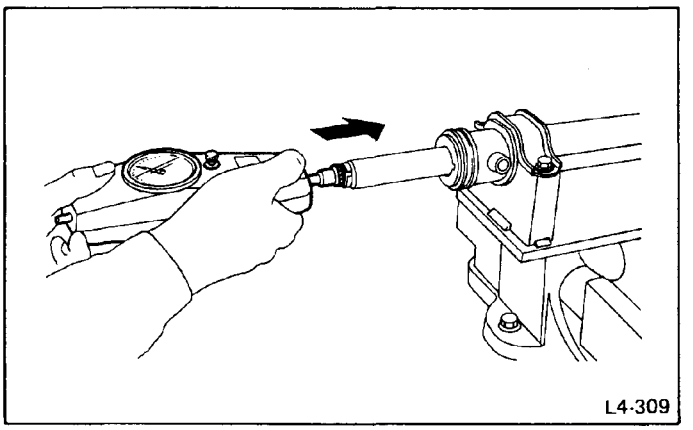

Fig. 101 Left-turn steering

Rack shaft play in radial direction

- **Right-turn steering**

Service limit:
0.15 mm (0.0059 in) or less

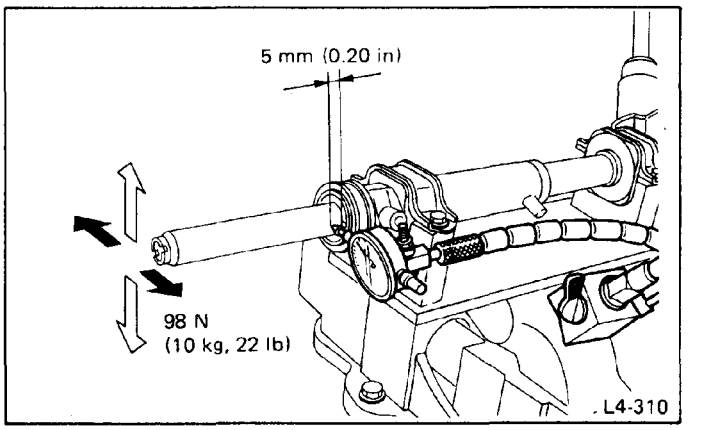

Fig. 102

- **Left-turn steering**

Service limit:
Direction ⟷
0.3 mm (0.012 in) or less
Direction ⟺
0.15 mm (0.0059 in) or less

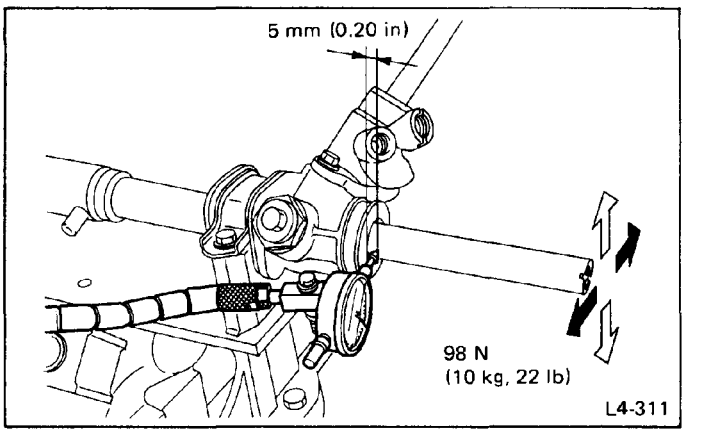

Fig. 103

Input shaft play

- **In radial direction**

Service limit:
0.18 mm (0.0071 in) or less

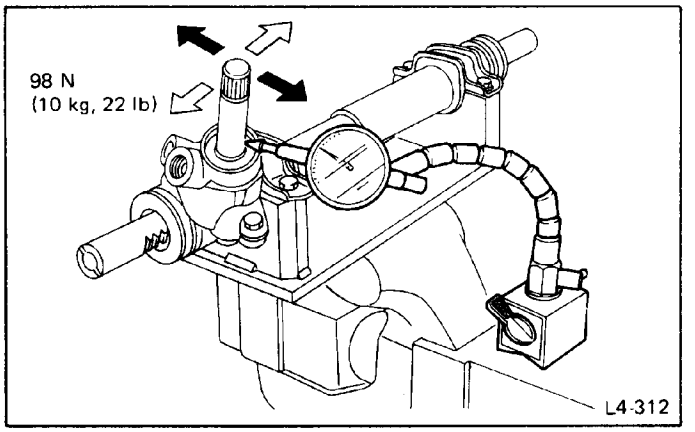

Fig. 104

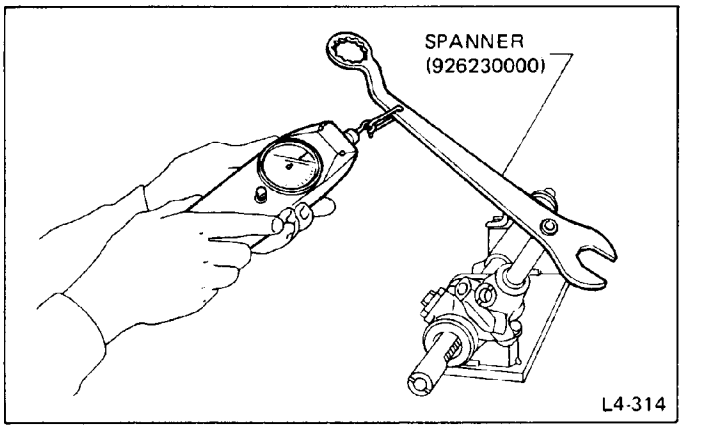

Fig. 106

- **In axial direction**

Service limit:
0.1 mm (0.004 in) or less

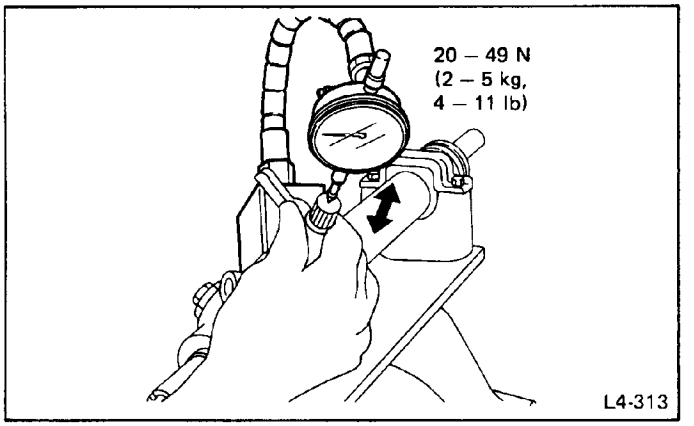

Fig. 105

Turning resistance of gearbox

Service limit:
Straight-ahead position within 30 mm (1.18 in) from rack center
Less than 7.85 N (0.80 kg, 1.76 lb)
Maximum allowable resistance
10.10 N (1.03 kg, 2.27 lb)

ASSEMBLY

Use only SUBARU genuine grease for gearbox.

Specified grease for gearbox
VALIANT GREASE M2 [Parts No. 003608001, net 0.5 kg (1.1 lb)]

1) Apply grease to teeth of rack so that grease applied is about as high as teeth, and also apply a thin film of grease to sliding portion of rack shaft.

a. When moving rack to stroke end without tie-rod attached, prevent shocks from being applied at the end.
b. Do not apply grease to threaded portion at end of rack shaft.
c. Move rack shaft to stroke end two (2) or three (3) times to squeeze grease which accumulates on both ends. Remove grease to prevent it from choking air passage hole.

2) Apply grease to sleeve insertion hole.
3) Apply grease to dust seal or dust cover insertion hole.

Apply clean grease with clean hands. If material having a sharp edge is used for applying grease, oil seal at the inside might be damaged.

4) Grease up dust cover and install it on input shaft until it reaches stepped section.

Be sure to adjust the lip of dust cover so that it comes into contact with housing end [approximately 0 to 0.5 mm (0 to 0.020 in)]. If contact is too hard, steering wheel will not return smoothly; if clearance exists, dust or dirt will get in.

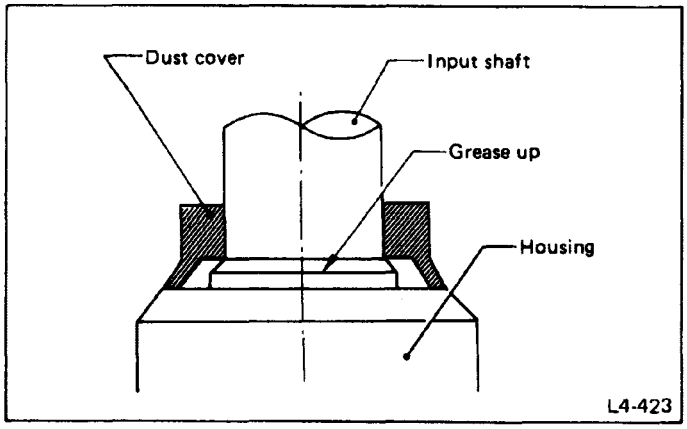

Fig. 107

5) Apply grease to sliding surface of sleeve and spring seat, then insert sleeve into pinion housing ASSY. Fit spring into sleeve screw, pack grease inside of screw, then install the screw.

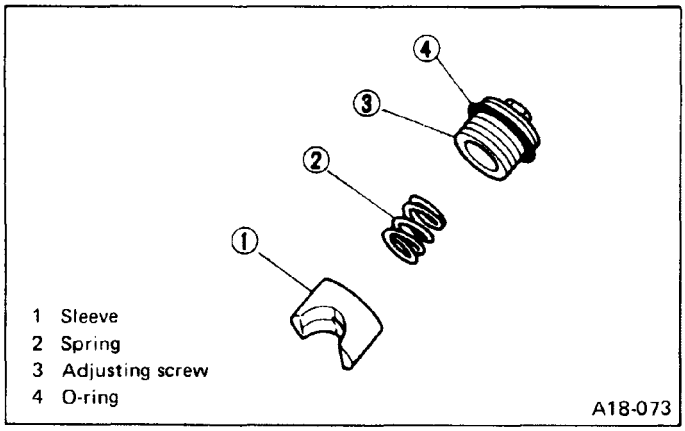

Fig. 108

6) Adjust backlash of rack and pinion in the following manner.

(1) To make sure that sleeve is in contact with rack, tighten adjusting screw to 5 N·m (0.5 kg-m, 3.6 ft-lb) and return it about half a rotation.

(2) Turn adjusting screw until turning torque increases steeply, and then turn it back approx. 1/12 turn (30°). Lock adjusting screw by lock nut.

Torque (Lock nut):
29 – 49 N·m (3 – 5 kg-m, 22 – 36 ft-lb)

a. Hold adjusting screw with a wrench to prevent it from turning while tightening lock nut.
b. Make adjustment so that steering wheel can be rotated fully from lock to lock without binding.

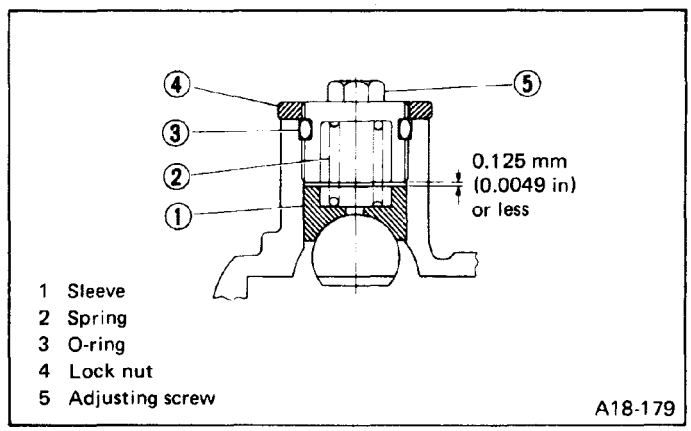

Fig. 109

7) Check for service limit as per article of "INSPECTION, Service limit". Make replacement and adjustment if necessary.
8) Fit new lock washer on screwed portion of rack end. Aligning cut portion of rack and nail of washer, screw in and tighten ball joint by using WRENCH (925700000) and SPANNER (926230000).

Torque (Ball joint):
78 N·m (8.0 kg-m, 58 ft-lb)

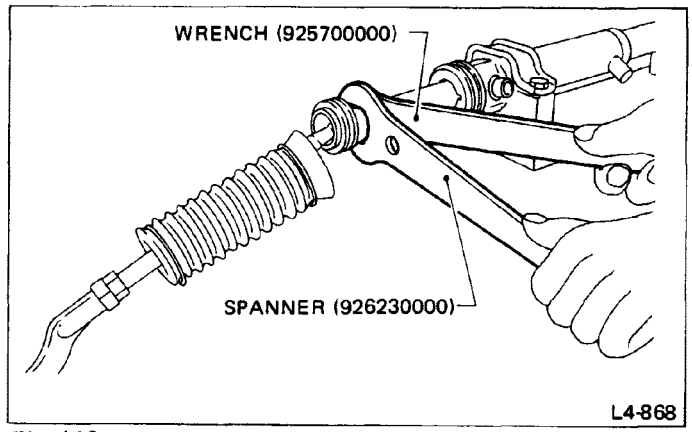

Fig. 110

a. While tightening ball joint, hold rack with special tool (WRENCH; 925700000) to prevent it from revolving.
b. Pay attention to prevent rack surface on the right side from being damaged by a tool or the like, otherwise oil leakage might be caused.

9) Bend lock washer toward plain surface of ball joint, after removing gearbox ASSY from stand.

When bending lock washer, always put ball joint on plain block. Do not leave sharp edge on bent lock washer.

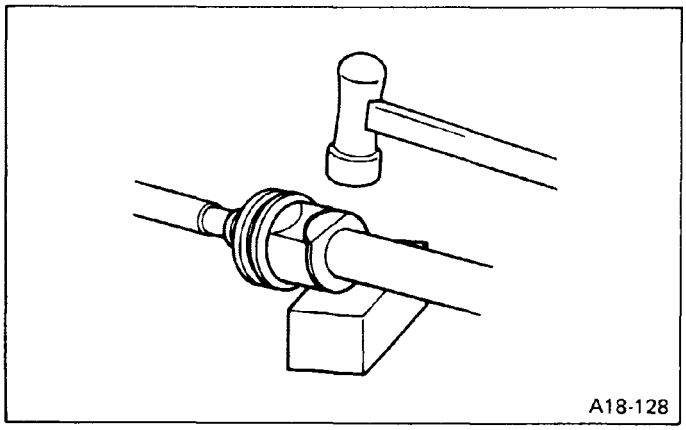

Fig. 111

10) Fit clips (large and middle) to boot, and then install boot to gearbox while holding boot flange.
After installing boot, fold back boot flange to the extent that large clip can not be seen.

a. Before installing boot, be sure to apply grease to the groove of tie-rod.
b. Install fitting portions of boots to the following portions in both sides of assembled steering gearbox.
- **The groove on gearbox**
- **The groove on ball joint**
- **The groove on the rod**

c. Make sure that boot is installed without unusual inflation or deflation.

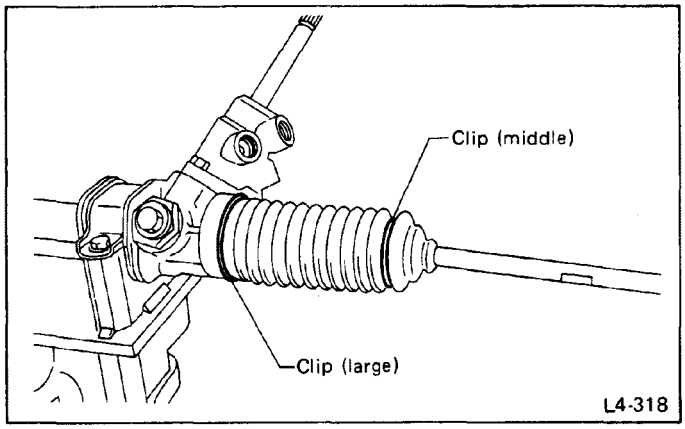

Fig. 112

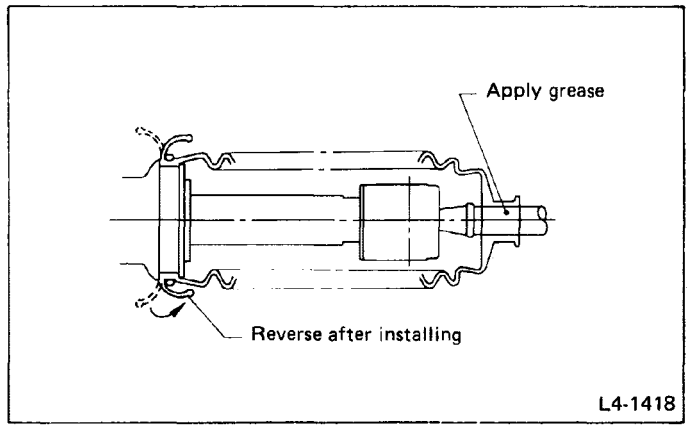

Fig. 113

11) Fix boot end with clip (small).

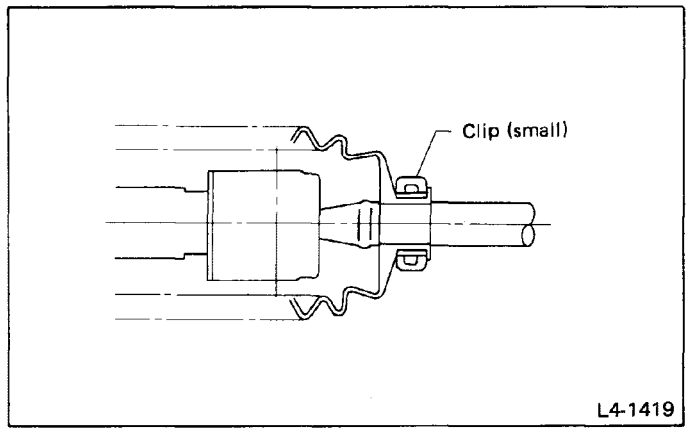

Fig. 114

a. Use screwdriver with blunted tip to prevent boot from damage, when installing.
b. After installing, check boot end is positioned into groove on tie-rod.

12) If tie-rod end was removed, screw in lock nut and tie-rod end to screwed portion of tie-rod, and tighten lock nut temporarily in a position as shown in the illustration.

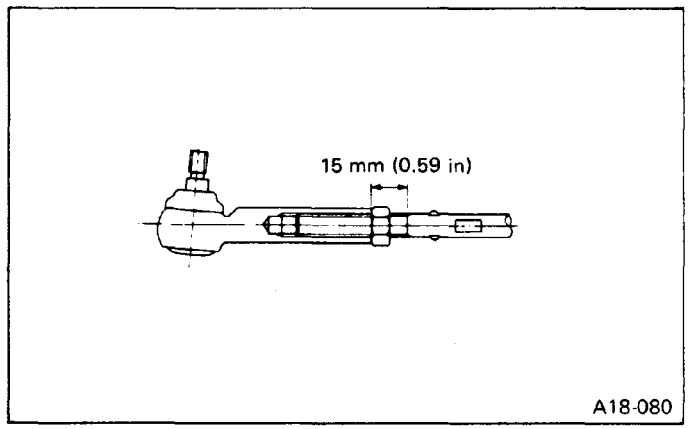

Fig. 115

Pay attention to difference between right and left tie-rod ends.

Identification mark	Right one	RH
	Left one	LH

13) Inspect gearbox ASSY as follows.

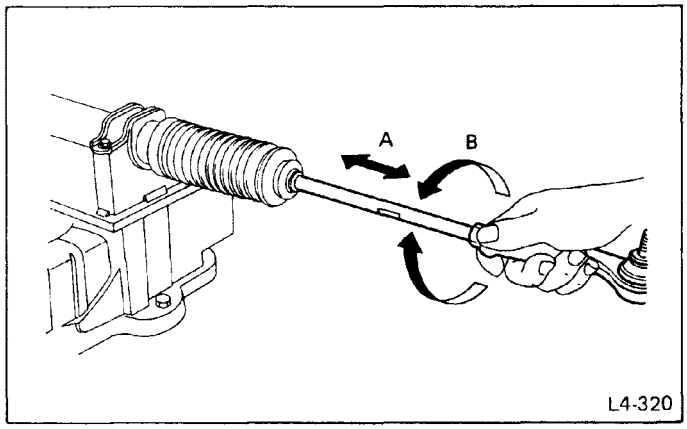

Fig. 116

A. Holding tie-rod end, repeat lock to lock two (2) or three (3) times as quickly as possible.
B. Holding tie-rod end, turn ASSY slowly at a radius one (1) or two (2) times as large as possible.

After all, make sure that boot is installed in the specified position without deflation.

14) Remove gearbox ASSY from STAND (926200000).

INSTALLATION

1) Insert gearbox ASSY into crossmember, being careful not to damage gearbox boot.
2) Tighten gearbox ASSY to crossmember bracket via clamp with bolt.

Tightening torque:
47 – 71 N·m (4.8 – 7.2 kg-m, 35 – 52 ft-lb)

3) Connect pipes A and B to four pipe joints of gearbox ASSY. Connect upper pipe B first, and lower pipe A second.

Tightening torque:
10 – 16 N·m (1.0 – 1.6 kg-m, 7 – 12 ft-lb)

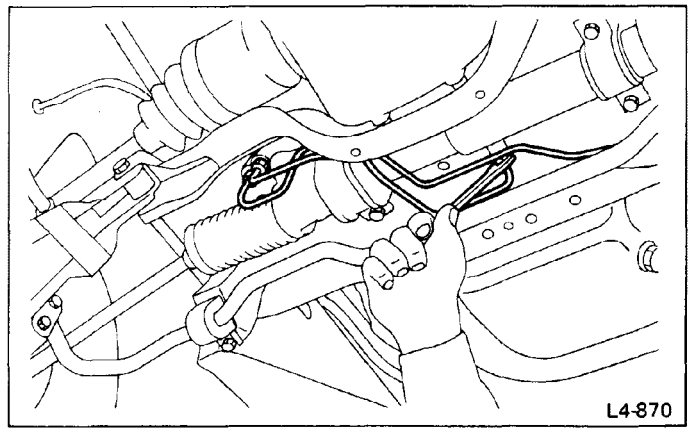

Fig. 117

4) Connect pipes C and D to gearbox ASSY.
Connect lower pipe C first, and upper pipe D second.

Tightening torque:
10 – 20 N·m (1.0 – 2.0 kg-m, 7 – 14 ft-lb)

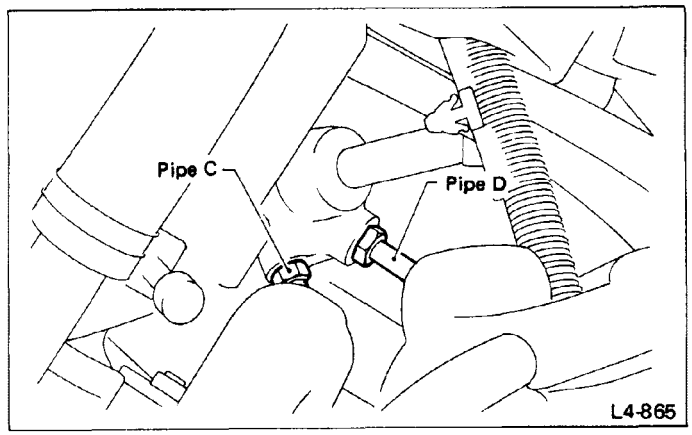

Fig. 118

5) Install joint ASSY, proceeding as follows:
(1) Align bolt hole of long yoke with the notch in serration of column ASSY, and push in joint fully.
(2) Align bolt hole of short yoke with the notch in input shaft serration of gearbox, and lower joint fully.
(3) Fit bolt to short yoke, and raise the joint, then check that the bolt on short yoke side is correctly fitted in the serration notch.
(4) Tighten long yoke side bolt, then tighten joint side bolt.

Tightening torque:
22 – 25 N·m (2.2 – 2.6 kg-m, 16 – 19 ft-lb)

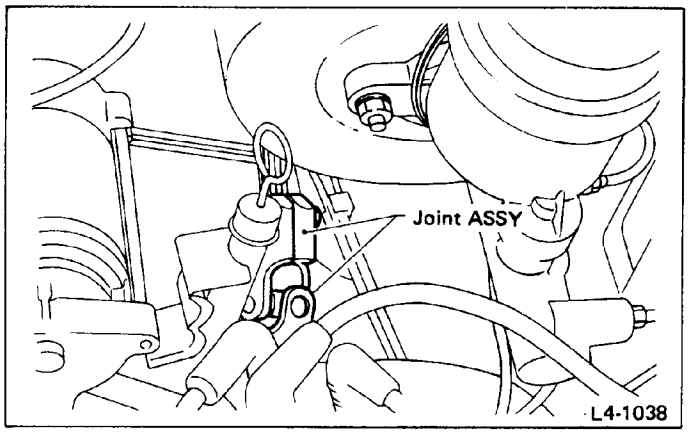

Fig. 119

6) Connect tie-rod end and knuckle arm, and tighten with castle nut. Fit cotter pin into the nut and bend the pin to lock.

Castle nut tightening torque:
Tighten to 25 – 29 N·m (2.5 – 3.0 kg-m, 18 – 22 ft-lb), and tighten further within 60° until cotter pin hole is aligned with a slot in the nut.

When connecting, do not hit cap at the bottom of tie-rod end with hammer.

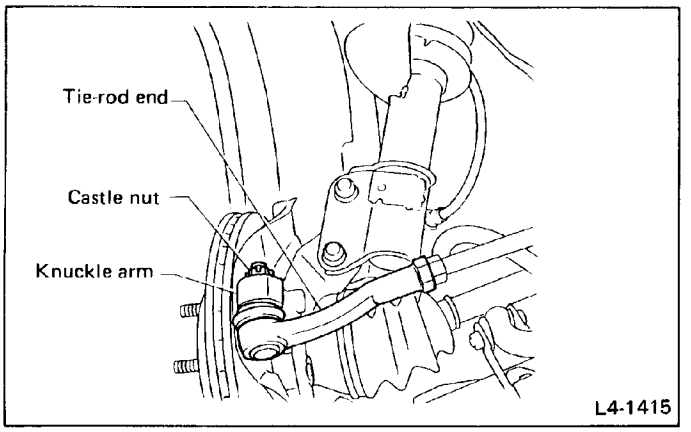

Fig. 120

7) Install front exhaust pipe ASSY.
(Refer to "EXHAUST SYSTEM".)
8) Install tires.
9) Tighten wheel nuts to the specified torque.

Tightening torque:
78 – 98 N·m (8.0 – 10.0 kg-m, 58 – 72 ft-lb)

10) Install thermo sensor connector.
11) Connect ground cable to battery.
12) Pour fluid into oil tank, and bleed air. Refer to section "Air bleeding procedure".
13) Check for fluid leaks.
14) Install jack-up plate and clamp A.

Be careful, exhaust manifold is hot.

15) Lower vehicle.
16) Check fluid level in oil tank.
17) After adjusting toe-in and steering angle, tighten lock nut on tie-rod end.

Tightening torque:
78 – 88 N·m (8.0 – 9.0 kg-m, 58 – 65 ft-lb)

When adjusting toe-in, hold boot as shown to prevent it from being rotated or twisted. If twisted, straighten it.

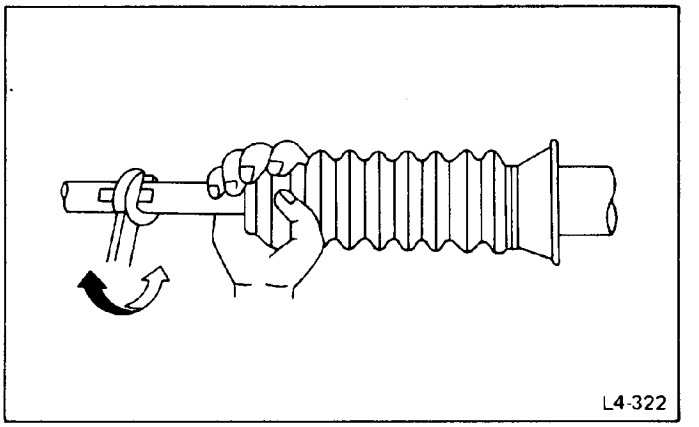

Fig. 121

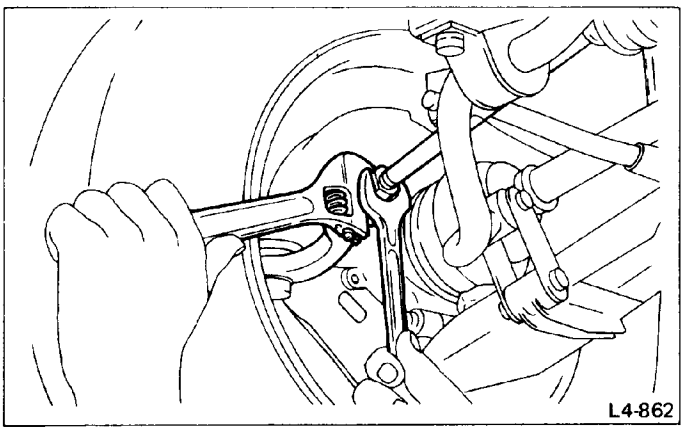

Fig. 122

ADJUSTMENT

1) Adjust front toe.

Standard of front toe
FWD:
OUT 1 – IN 1 mm (OUT 0.04 – IN 0.04 in)
4WD:
IN 1 – IN 3 mm (IN 0.04 – IN 0.12 in)

2) Adjust steering angle of wheels.

Inner wheel:
Except XT6: 36°30′ – 39°30′
XT6: 34°30′ – 37°30′
Outer wheel:
Except XT6: 33° – 36°
XT6: 30°30′ – 33°30′

3) If steering wheel spokes are not horizontal when wheels are set in the straight ahead position, and error is more than 5° on the periphery of steering wheel, correctly reinstall the steering wheel.

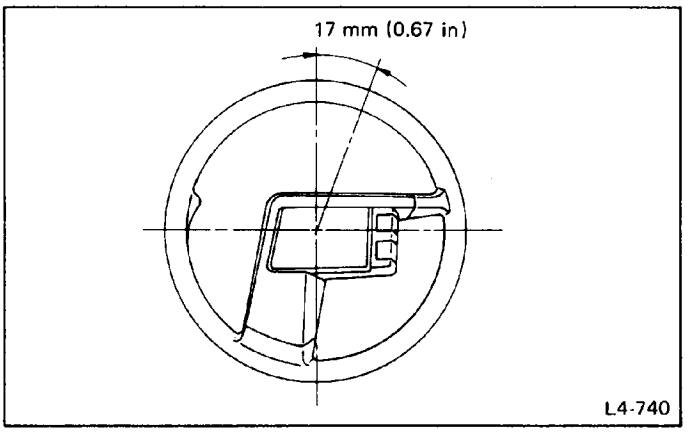

Fig. 123

If steering wheel spokes are not horizontal with vehicle set in the straight ahead position after this adjustment, correct it by turning the right and left tie-rods in the same direction by the same amount.

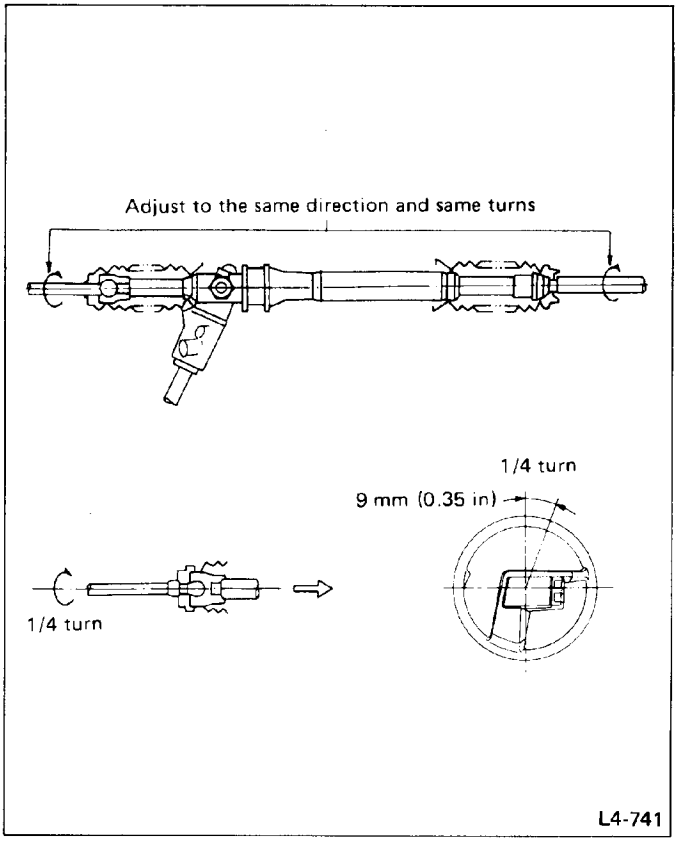

Fig. 124

Control Valve (Power Steering Gearbox)

a. This section focuses on the disassembly and reassembly of control valve. For the inspection and adjustment and the service procedures for associated parts, refer to "Steering Gearbox (Power Steering System)".
b. The number following a parts name in the text refers to the key No. in the component parts illustration.

CHECKING OIL LEAKING POINTS AND REPLACEMENT PARTS

OIL LEAKING POINTS

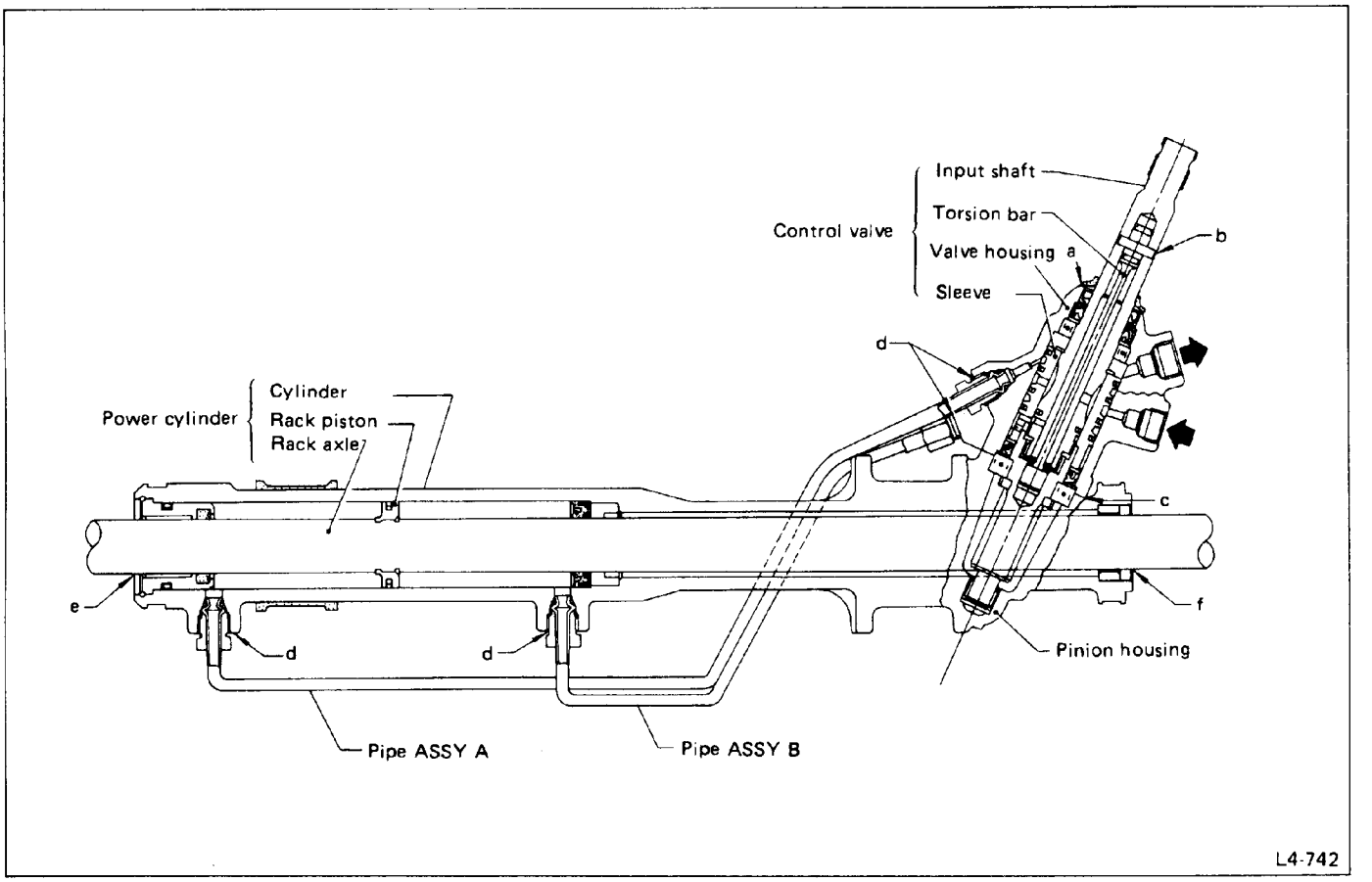

Fig. 125

a. If leak point is other than a, b, c, or d, perform check (5) in 2) before dismounting gearbox ASSY from vehicle. If gearbox ASSY is dismounted without confirming where the leak is, it must be mounted again to locate the leak point.
b. Even if the location of the leak can be easily found by observing the leaking condition, it is necessary to thoroughly remove the oil from the suspected portion and turn the steering wheel from lock to lock about 30 to 40 times with engine running, then make comparison of the suspected portion between immediately after and several hours after this operation.
c. Before starting oil leak repair work, be sure to clean the gearbox ASSY, hoses, pipes, and surrounding parts. After completing repair work, clean these areas again.

OIL LEAK CHECK PROCEDURE AND REPLACEMENT PARTS

a. Parts requiring replacement are described in the smallest unit of spare parts including damaged parts and spare parts damaged. In actual disassembly work, accidental damage as well as inevitable damage to some related parts must be taken into account, and spare parts for them must also be prepared. However, it is essential to pinpoint the cause of trouble, and limit the number of replacement parts as much as possible.
b. Disassembly and parts to be replaced.
c. To locate cause of trouble, disassemble steering system as indicated below.

Disassembling	Parts to be replaced
Disassembling the steering body ASSY	Lock washer ⑱ Seal kit ㊸ (Backup ring ㉗ should be replaced depending on amount of damage, wear.) Steering grease (P/N 003608001) Bond C (P/N 004403004)
Disassembling the valve ASSY	Seal kit ㊸ Steering grease (P/N 003608001) Bond C (P/N 004403004)
Parts to discard after disassembling	Lock washer ⑱ Parts included in seal kit ㊸ (Backup ring ㉗ and Backup ring ㉟ should be replaced depending on amount of damage, deformation.)

1) Leak from "a"
Since the Y-packing ㊱ is damaged, replace valve housing ASSY ㉝ with a new one. Or replace the damaged parts and parts damaged during disassembly with new ones.
2) Leak from "b"
O-ring (torsion bar) is damaged, so replace pinion & valve ASSY ㊳ with a new one.
3) Leak from "c"
Oil seal ㊹ is damaged, so replace pinion & valve ASSY ㊳ with a new one.
4) Leak from "d"
Pipe ASSY ㊾ or ㊿ is damaged, so replace the damaged pipe ASSY with a new one.
5) Leak from "e" or "f"
Slide both boots to the tie-rod end with the gearbox ASSY on the vehicle, and then wipe any oil around them. Start the engine, and make sure of the following items immediately after about 30 to 40 lock-to-lock operations of the steering wheel and again a few hours later. Then replace faulty parts.

(1) Leak from "e"
Y-packing ㉓ is damaged, so replace seal holder ASSY ㉒ with new one.
(2) Leak from "f"
Leakage from "f" may have two causes.
Determine the exact cause by the following procedure.

Finding the leak
Remove the pipe ASSY B ㊿ from the valve housing and substitute the cap with the special tool (PLUG: 926420000). Start the engine, and then check if it leaks immediately after the about 30 to 40 lock-to-lock operations of the steering wheel and after a few hours later.
Result of test and remedial action
- Leak continues from "f"

Oil seal ㊹ is damaged, so replace the pinion & valve ASSY ㊳ with a new one.
- No further leak from "f"

Oil seal ㉖ is damaged, so replace the oil seal and all parts damaged during disassembly with new ones.

DISASSEMBLY

REMOVAL OF VALVE ASSEMBLY

1) Remove two bolts which hold valve housing ASSY.
2) Extract valve housing ASSY and pinion & valve ASSY as a unit.

a. If the pinion part is pulled out from valve ASSY, pinion dust seal may easily be damaged. Therefore, pull out valve ASSY while grasping valve housing and input shaft simultaneously.

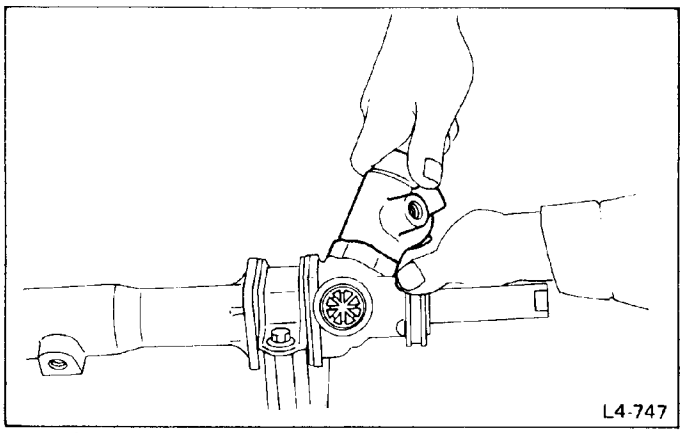

Fig. 126

b. For easier assembly, remember the tooth position between the rack and the pinion.

3) Extract pinion & valve ASSY from valve housing ASSY, if necessary.

DISASSEMBLY OF RACK ASSEMBLY

1) Removal of seal holder snap ring
Attach REMOVER (926260000) to snap ring through the hole in boot groove on the cylinder side of steering body ASSY, and lightly tap REMOVER with a hammer to drive snap ring out.

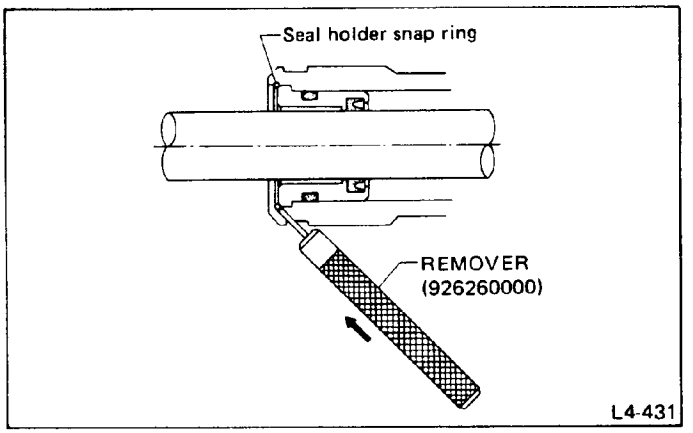

Fig. 127

2) Removal of rack ASSY
Push on rack from the valve side of steering body ASSY and extract it from the opposite side.

a. Do not allow rack to contact the inner wall of cylinder when removing it. Scratches on the wall may cause oil leakage.
b. Holder ASSY can be removed with rack ASSY.

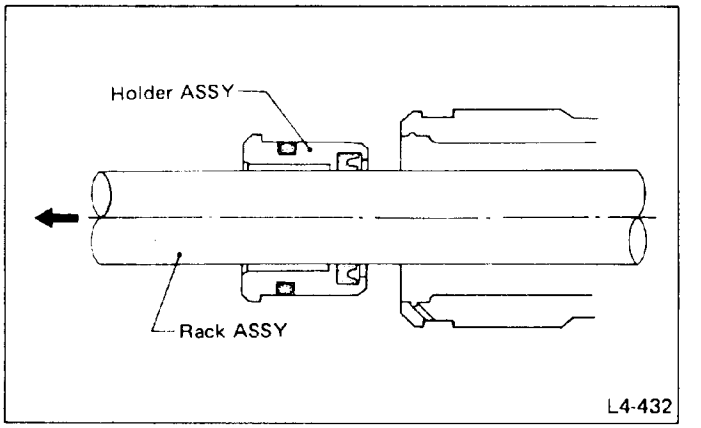

Fig. 128

3) Removal of high-pressure seal
Push backup ring and oil seal out by inserting REMOVER (926330000) from the valve side.

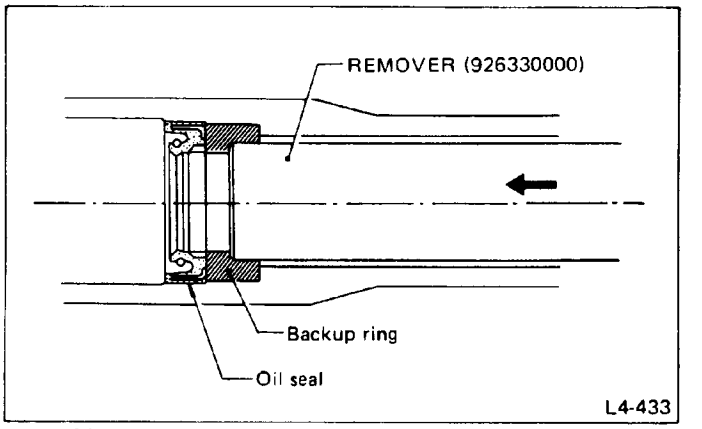

Fig. 129

DISASSEMBLY OF VALVE ASSEMBLY

1) After removing dust cover, push pinion & valve ASSY out of valve housing.

a. Do not allow the serrated edges of input shaft to contact Y-packing.
b. If pinion & valve ASSY is hard to remove, push out using a press.

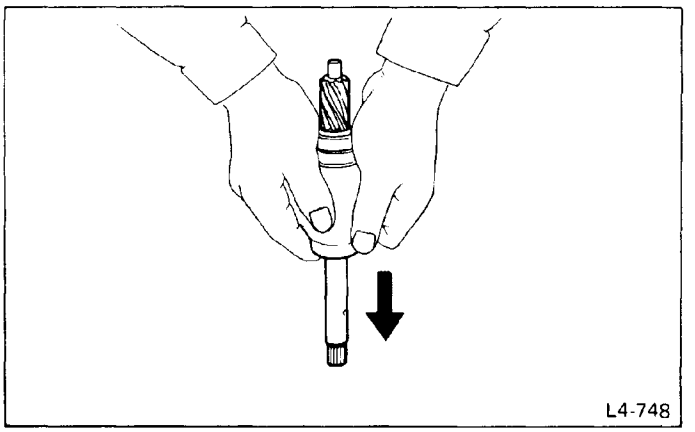

Fig. 130

2) Drive dust seal, back-up ring, Y-packing and ball bearing out of valve housing REMOVER (926290000) and a press.

Use side A of REMOVER and do not apply load to the face of valve housing.

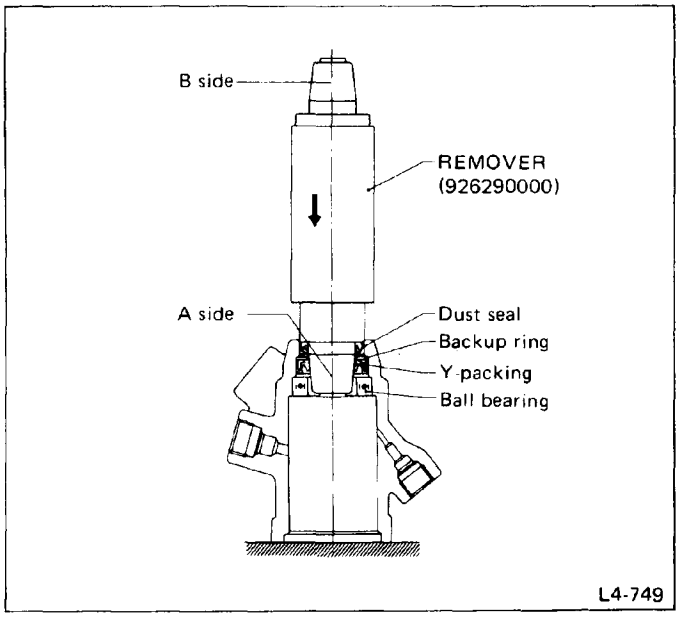

Fig. 131

ASSEMBLY

a. Before operation, clean all parts to be assembled and tools.
b. Use only genuine SUBARU steering grease.
c. Do not use the parts to be replaced, as shown in NOTE b. of 2) of "CHECKING OIL LEAKING POINTS AND REPLACEMENT PARTS".

ASSEMBLY OF VALVE ASSEMBLY

1) Apply a coat of grease to valve housing as shown in the figure, as well as to back-up ring and Y-packing (valve housing).

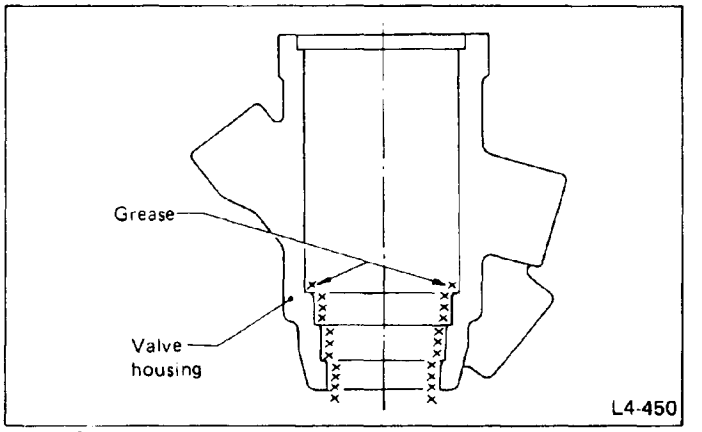

Fig. 132

2) Drive dust seal into place using INSTALLER (926300000) and a press.

a. Face dust seal in the direction shown in the figure.
b. Apply a coat of grease to the mating surface of INSTALLER with dust seal to avoid damaging the dust seal.

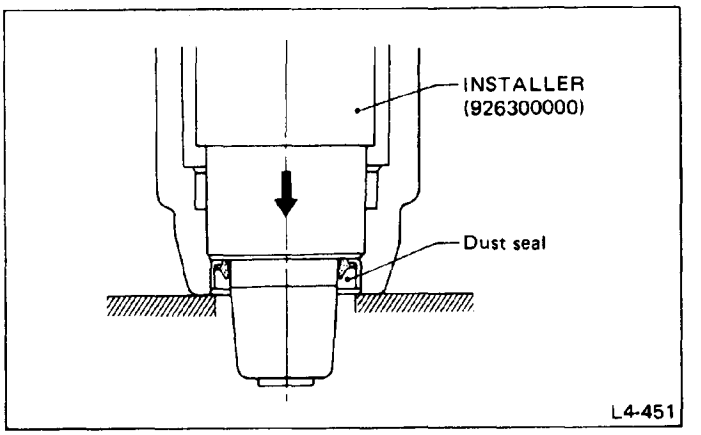

Fig. 133

3) Drive valve housing Y-packing and backup ring with INSTALLER (926300000) and a press.

a. Pay attention to the direction of Y-packing and the order of installation as shown in the figure. Otherwise, oil leakage may result.
b. Apply a coat of grease to the mating surface of INSTALLER with Y-packing to avoid damaging the Y-packing.
c. To facilitate installation, attach Y-packing and backup ring to INSTALLER and insert into valve housing before using a press.

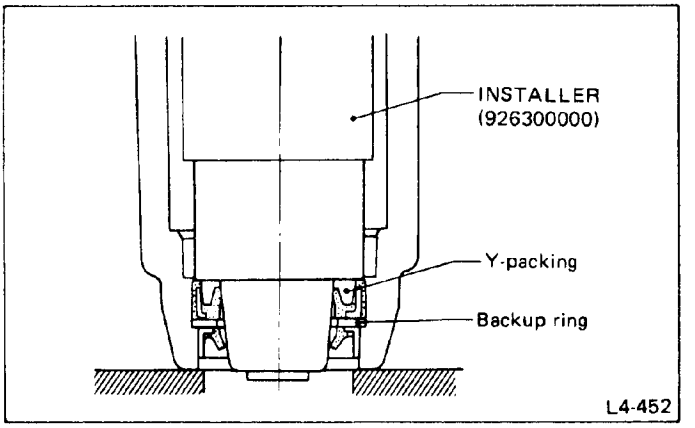

Fig. 134

4) Drive ball bearing into place with REMOVER (926290000) and a press. Use side B of REMOVER.

To facilitate installation, attach ball bearing to REMOVER and insert into valve housing before using a press.

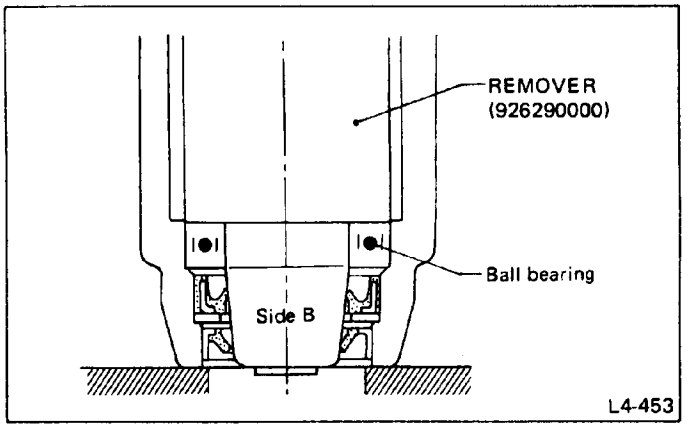

Fig. 135

5) Fill dust seal with grease.

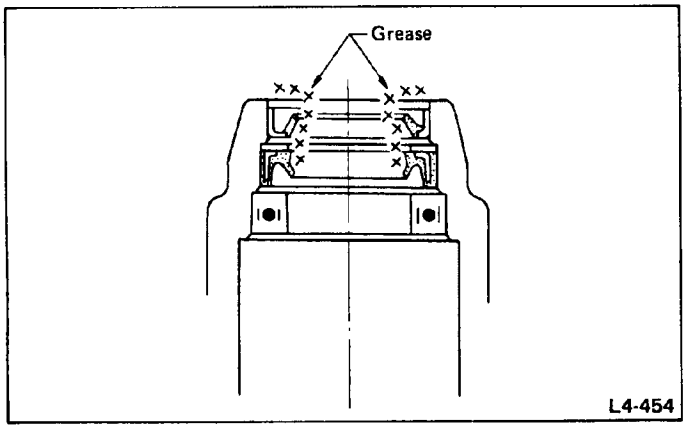

Fig. 136

6) Apply a coat of grease to the surface of GUIDE (926310000) and place GUIDE over end of input shaft. Also apply grease to input shaft.
Insert pinion & valve ASSY into valve housing until the lip of pinion oil seal touches valve housing.

Be sure GUIDE is free from scratches which would damage Y-packing.

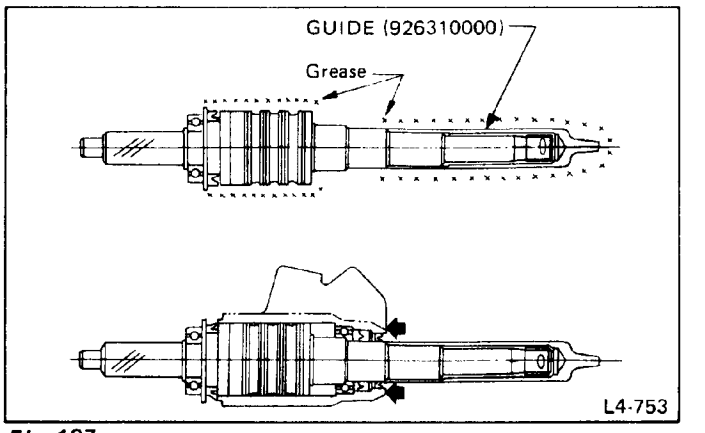

Fig. 137

7) Push valve housing until it accommodates pinion & valve ASSY.

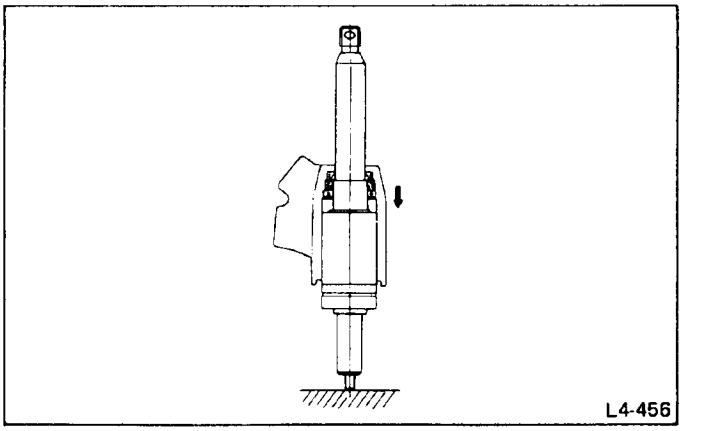

Fig. 138

8) Apply a coat of grease to the lip of dust cover and insert dust cover until it butts up to the "graded" section of input shaft.

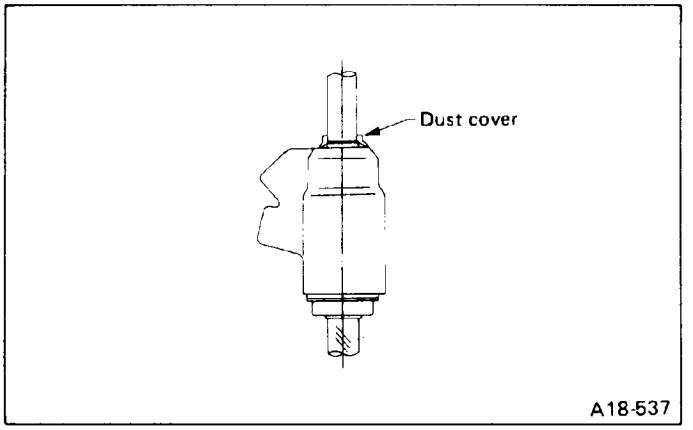

Fig. 139

a. Adjust so that the lip touches the end of housing [0 to 0.5 mm (0 to 0.020 in)]. If contact is too hard, steering wheel will not return smoothly; if clearance exists, dirt or dust will get in.
b. Be sure pinion & valve ASSY is properly inserted into valve housing prior to adjustment.

ASSEMBLY OF RACK ASSEMBLY

1) Securely attach steering body ASSY to STAND (926200000) as shown in the figure, and grease to needle bearing.

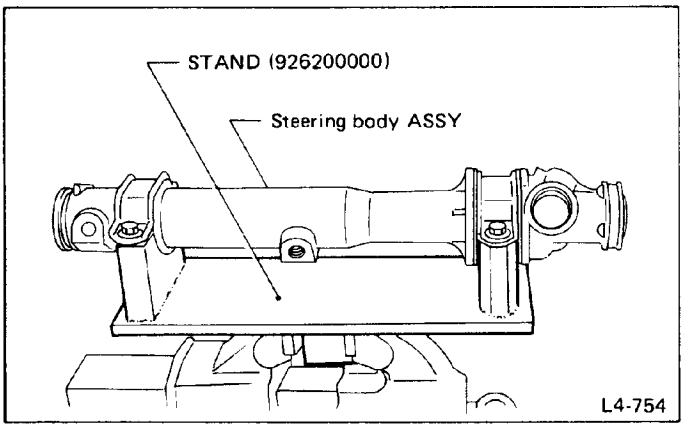

Fig. 140

a. Always use the special tool when holding steering body ASSY.
b. Whenever steering body ASSY is removed from the vehicle, remove any rust and clean the unit.
c. Make sure that none of the needle rollers of needle bearing are missing or bent. If defective, replace steering body ASSY with a new one.

2) Using special tools [shown by B and C (926240000) in the figure], attach oil seal to special tool [shown by A (926240000)].
Insert special tool A with oil seal into rack ASSY from gear side. Remove oil seal near the piston, and then extract special tool from rack ASSY.

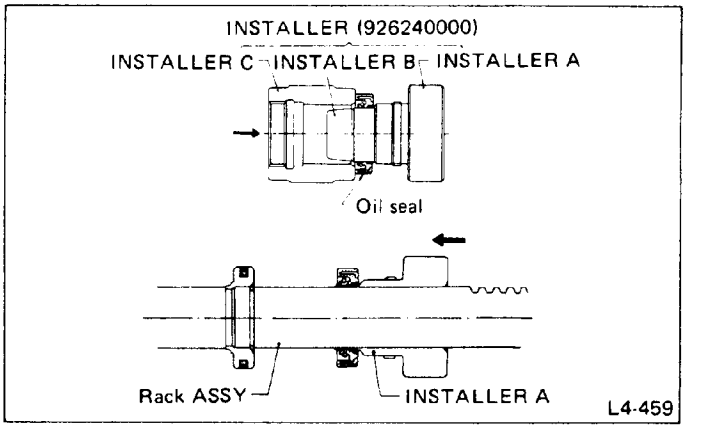

Fig. 141

3) Install back-up ring to rack ASSY from the gear side, as shown.

Ensure backup ring is installed in the proper direction.

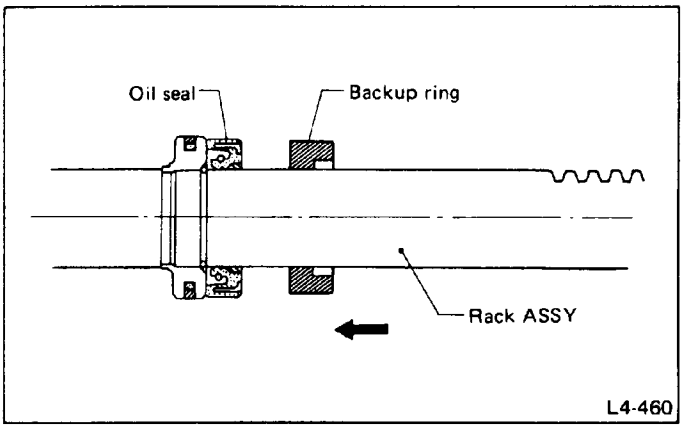

Fig. 142

4) Apply a coat of grease to rack teeth grooves, sleeve's sliding portion, and piston's sealing surface. Then insert rack ASSY into the cylinder side of steering body ASSY.

a. Be sure to apply sufficient grease to rack tooth sections to the extent that the entire tooth section is covered with grease.
b. Do not allow grease to enter vent hole in rack.

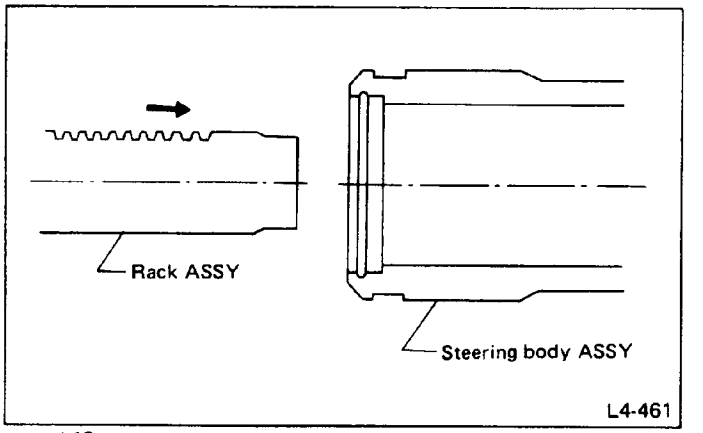

Fig. 143

5) Attach GUIDE (926250000) to rack ASSY which protrudes beyond the cylinder side, and apply a thin coat of grease uniformly to the surfaces of rack ASSY and GUIDE.

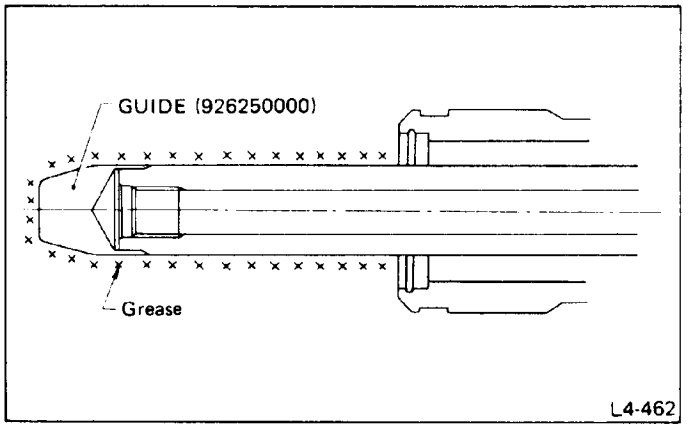

Fig. 144

6) Apply coat of grease to the inner surface of holder ASSY and O-ring, insert into rack ASSY, and attach holder ASSY to steering body ASSY.

a. Be sure GUIDE is free from scratches which would damage Y-packing.
b. Be careful not to damage the lip section of Y-packing when installing holder ASSY.

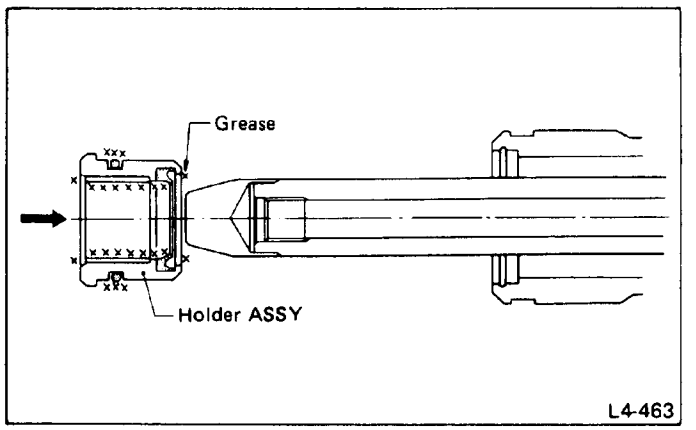

Fig. 145

7) Apply a coat of grease to snap ring and insert it into groove to secure holder ASSY.

Be sure one end of snap ring is close to pin hole.

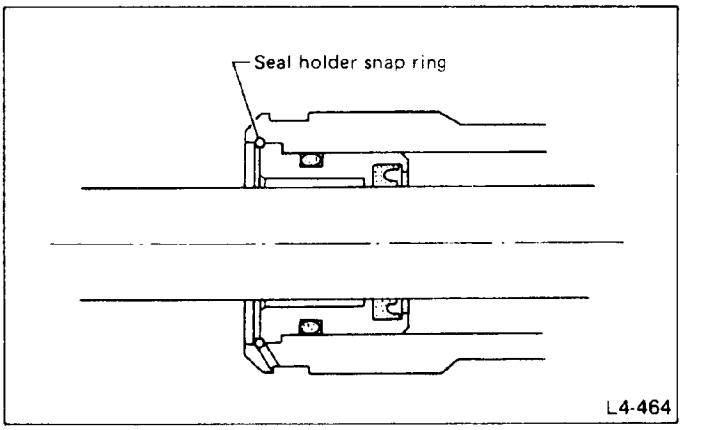

Fig. 146

8) Attach INSTALLER (926320000) to the cylinder side of rack ASSY and drive back-up ring and oil seal into place on steering body ASSY using a pressing tool.

Be sure to push INSTALLER until its groove reaches the end surface of holder ASSY.

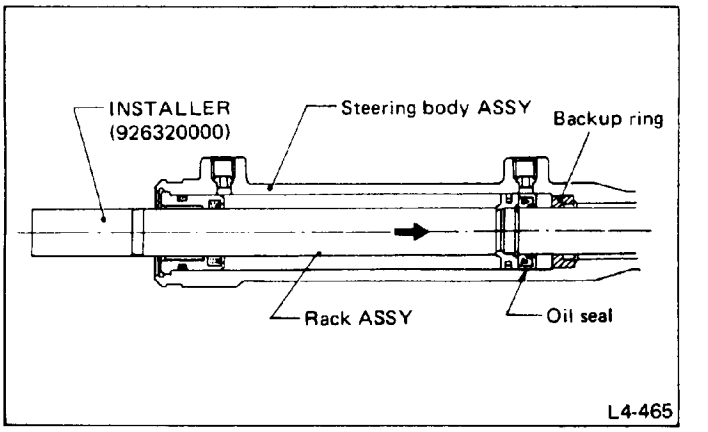

Fig. 147

INSTALLATION OF VALVE ASSEMBLY

1) Clean all traces of sealer, oil, rust, etc. from the mating surface of valve housing and steering body ASSY.
2) Attach shim(s) to the stepped lip of steering body ASSY's pinion housing, and apply sealer (Fuji Bond C: 004403004) uniformly to the lip side end surface of pinion housing.

a. Use the same number of shims as before if previously removed steering body ASSY, valve housing and valve ASSY are reassembled.
b. If any of the above units are replaced with new ones, add a number of shims, install valve ASSY to pinion housing, and tighten two socket bolts to the specified torque of 20 to 29 N·m (2 to 3 kg-m, 14 to 22 ft-lb). Next, measure the clearance at the mating surface of steering body ASSY and valve housing with a thickness gauge. Remove the number of shim(s) which correspond to the clearance.

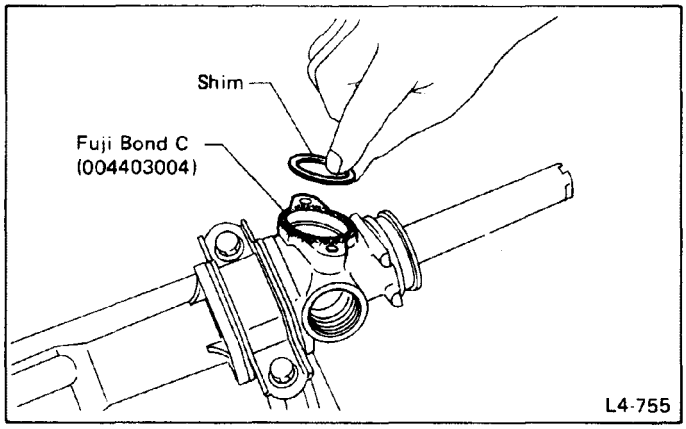

Fig. 148

3) Extract rack ASSY until it protrudes 77 mm (3.03 in) beyond the housing end face of pinion side.

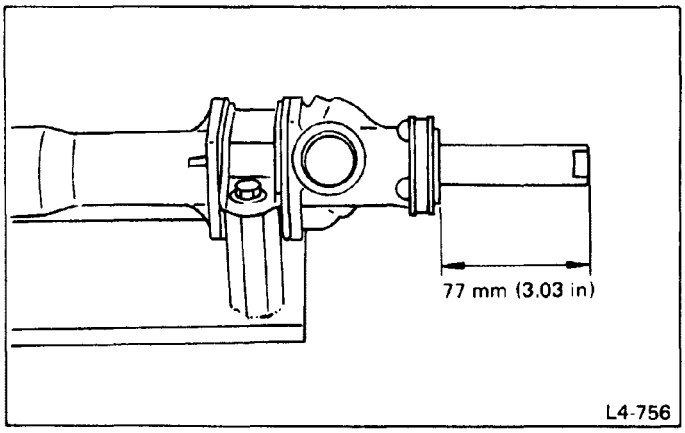

Fig. 149

4) Apply grease to pinion gear teeth grooves and ball bearing.
5) Position input shaft so that the cutout section faces toward the sleeve boss.

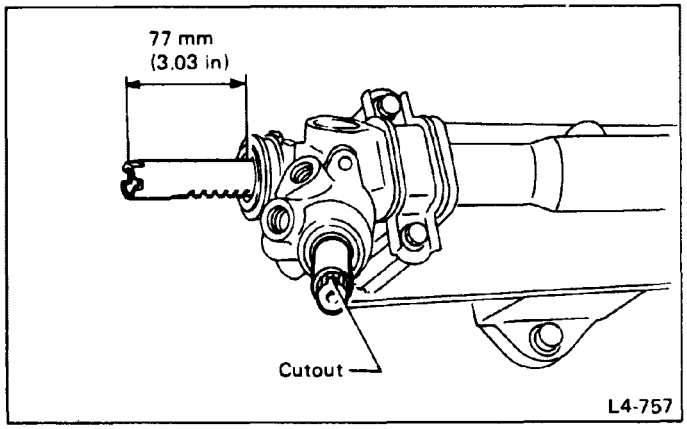

Fig. 150

If the top of pinion tooth is in the center position when pinion tooth is viewed from the sleeve side, input shaft is positioned correctly. If the bottom of tooth is in the center, turn input shaft 180°.

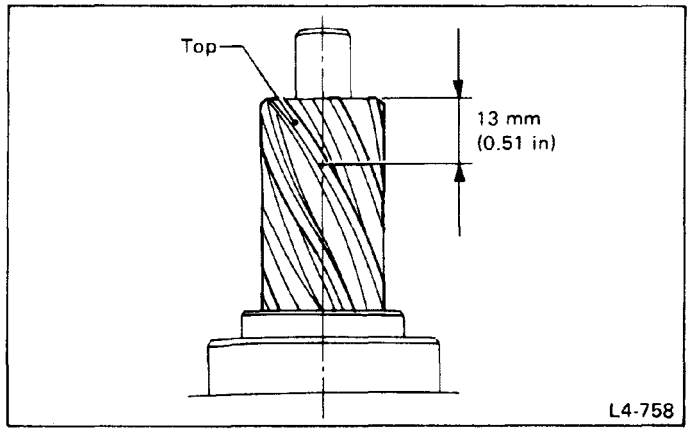

Fig. 151

6) With rack and pinion teeth positioned as in step (5) above, push valve ASSY in.

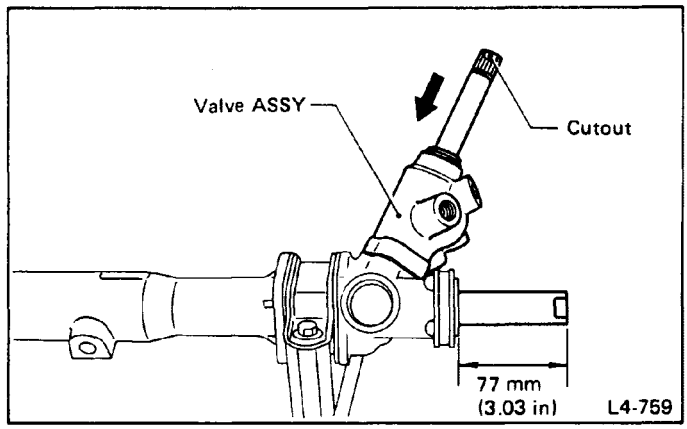

Fig. 152

7) Position rack ASSY again, as outlined in step (3), and gradually tighten socket bolts alternetely after confirming that the direction of the cutout secion of input shaft is correct.

a. If the direction of cutout section is incorrect, it means rack and pinion are displaced by one pitch. Repeat steps (3) to (6) above.
b. If valve ASSY needs to be reinstalled due to improper positioning, check the condition of sealer and reapply if required.
c. When shim(s) binds or when needle bearing is not in proper condition, valve ASSY cannot be properly installed. Replace faulty parts, as needed.

Tightening torque
20 – 29 N·m (2 – 3 kg-m, 14 – 22 ft-lb)

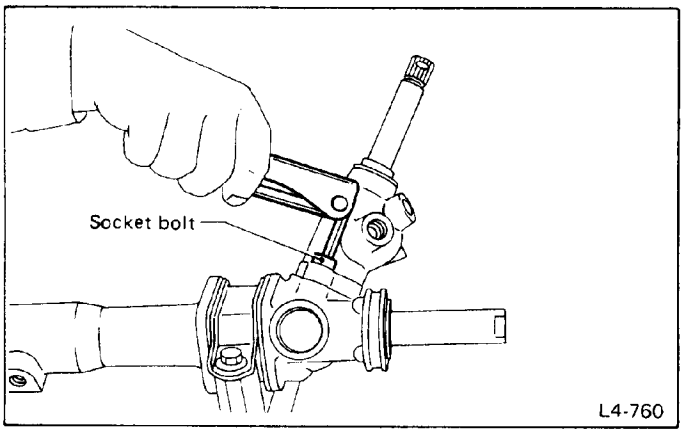

Fig. 153

Oil Pump (Power Steering System)

REMOVAL

1) Remove ground cable from battery.
2) Drain the working fluid about 0.3 ℓ (0.6 US pt, 0.5 Imp pt) from oil tank.

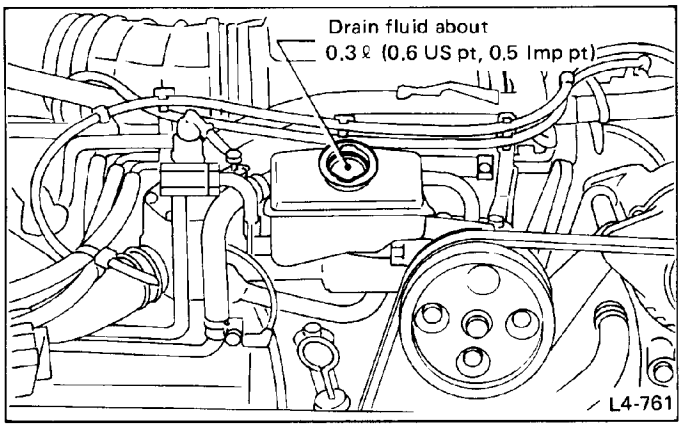

Fig. 154

3) Loosen (do not remove) oil pump pulley nut.

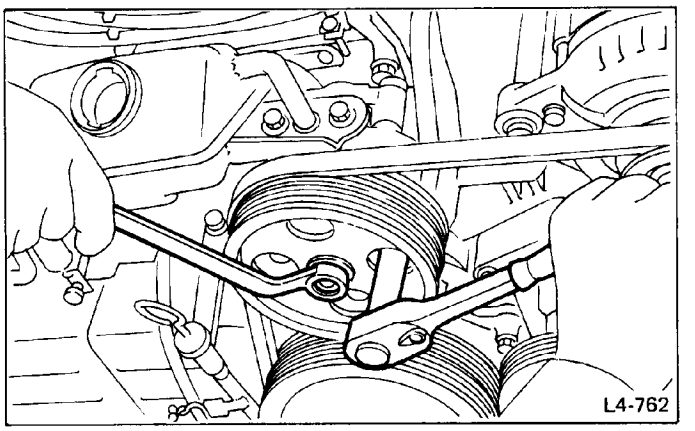

Fig. 155

4) Loosen pulley belt(s).
5) Remove the nut and detach oil pump pulley.
6) Disconnect hose A from pipe E. Disconnect hose B from oil tank.

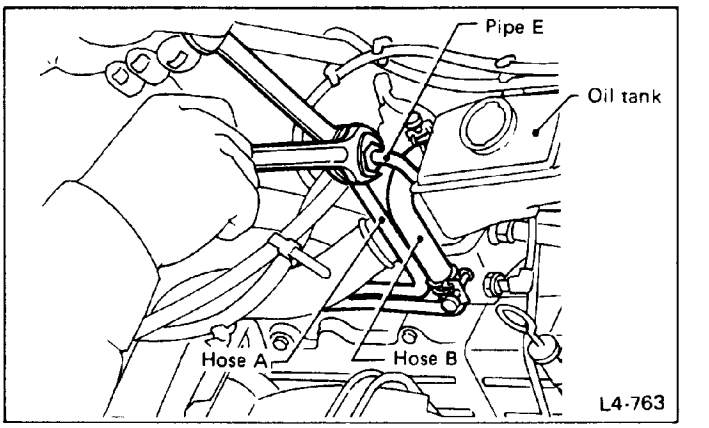

Fig. 156

a. When disconnecting hose A, use two wrenches to prevent pipe E from twisting.
b. Do not allow fluid from the hose end to come into contact with pulley belt.
c. To prevent foreign matter from entering the hose and pipe, cover the open ends of them with a clean cloth.

7) Remove clamp which secures pipe E to oil tank.

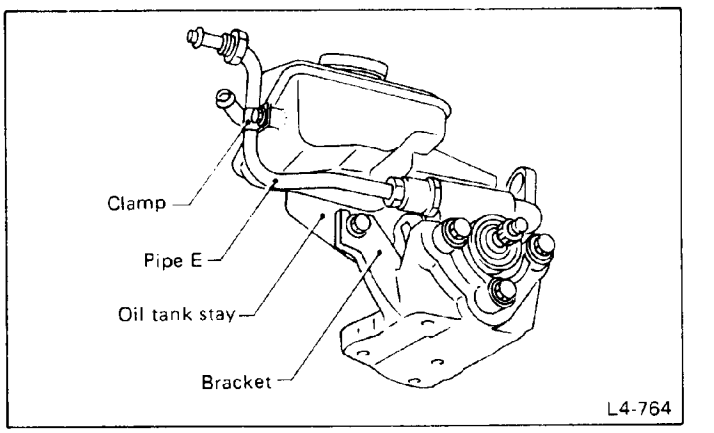

Fig. 157

8) Loosen bolt which secures oil tank stay to bracket.
9) Loosen bolts A and B located on the upper surface of oil tank.

a. Complete loosening of bolts causes the fluid to run out of tank. To minimize the amount of fluid lost, remove bolts while oil tank is pressed against oil pump and then quickly detach oil tank.
Wipe off any oil which has spilled on any part.
b. Except when only oil tank needs to be inspected, detach oil tank and oil pump as a unit. Then separate one from the other on a work bench to prevent oil from spilling on any part of the engine.

10) Remove three bolts from the front side of oil pump and detach the pump.

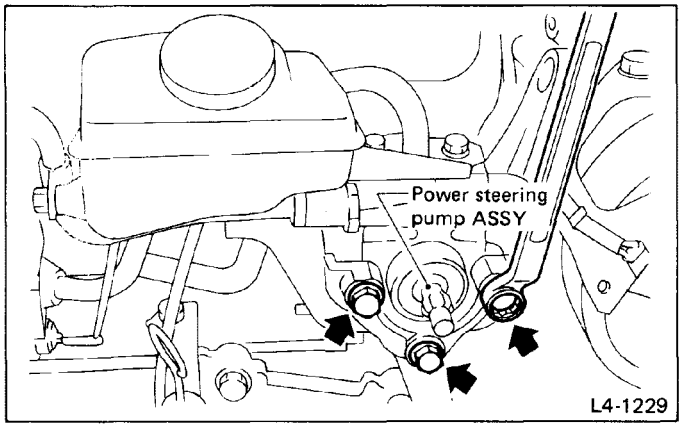

Fig. 158

11) Remove three bolts from the lower side of bracket and detach the bracket.

The bracket does not need to be removed unless it is damaged.

12) Place oil pump in a vise, remove two bolts from the upper side of oil tank and detach oil tank.

Do not place oil pump directly in the vise; use soft pads and hold oil pump lightly to protect the pump

13) Disconnect pipe E from oil pump if necessary.

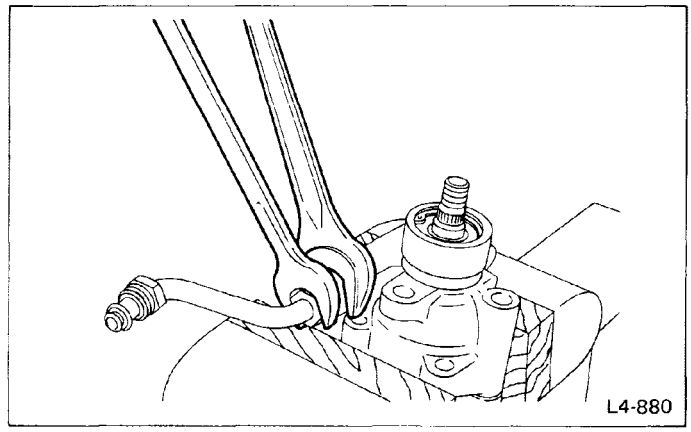

Fig. 159

Use two wrenches, one on the pump side and the other on the pipe side, to offset any torque being imposed on the pump.

CHECK

- In accordance with the following table, check all removed parts for wear and damage, and make repair or replacement if necessary.

No.	Parts	Inspection	Corrective action
1	Oil pump (Outside)	(1) Crack, damage or oil leakage	Replace oil pump ASSY with a new one.
		(2) Play of pulley shaft	Measure radial play and axial play. If any of these exceeds the service limit, replace oil pump ASSY with a new one. (Refer to "Service limit".)
2	Pulley	(1) Damage	Replace it with a new one.
		(2) Bend	Measure V ditch deflection. If it exceeds the service limit, replace pulley with a new one. (Refer to "Service limit".)
3	Cap	Crack or damage	Replace it with a new one.
4	Strainer	(1) Clogging with dirt	Wash it.
		(2) Breakage	Replace it with a new one.
5	Oil pump (Interior)	(1) Defect or burning of vane pump	Check resistance to rotation of pulley. If it is past the service limit, replace oil pump ASSY with a new one. (Refer to "Service limit".)
		(2) Bend in the shaft or damage to bearing	Oil pump emits a noise that is markedly different in tone and loudness from a sound of a new oil pump when turning with a string put around its pulley, replace oil pump ASSY with a new one.
6	O-ring	Crack or deterioration	Replace it with a new one.
7	Oil tank	Crack, damage or oil leakage	Replace it with a new one.
8	Bracket	Crack	Replace it with a new one.

SERVICE LIMIT

Make a measurement as follows. If it exceeds the specified service limit, replace the parts with a new one.

a. Fix oil pump ASSY on a vise to make a measurement. At this time, hold oil pump ASSY with the least possible force between two wood pieces.
b. Do not set outside of flow control valve or pulley on a vise; otherwise outside or pulley might be deformed. Select properly sized wood pieces.

Play of pulley shaft

Service limit:
Radial play (Direction ⟷)
0.4 mm (0.016 in) or less
Axial play (Direction ⟺)
0.9 mm (0.035 in) or less

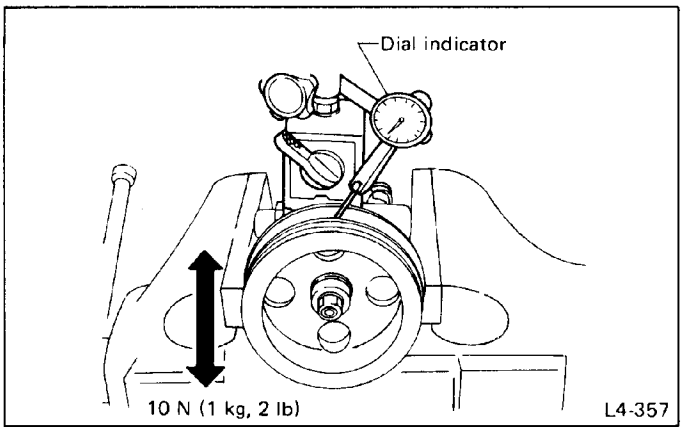

Fig. 160 Radial play

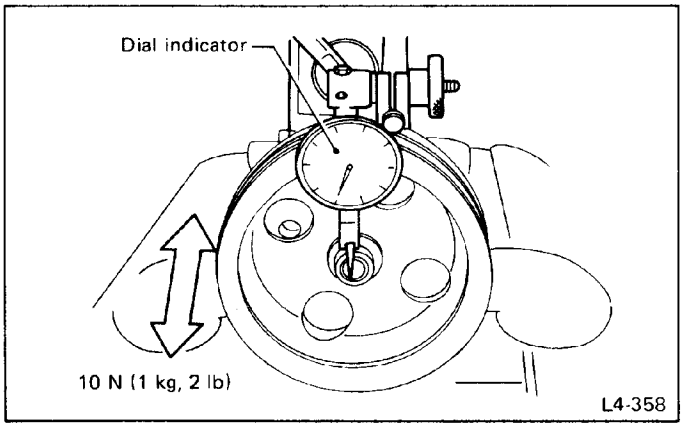

Fig. 161 Axial play

Ditch deflection of pulley

Service limit:
1.0 mm (0.039 in) or less

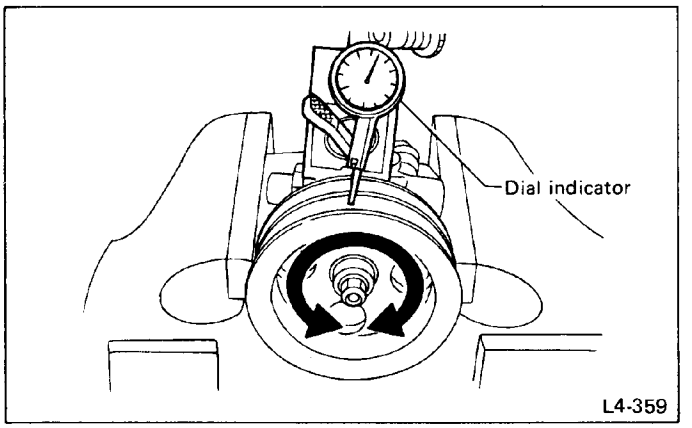

Fig. 162

Read the value for one surface of V ditch, and then the value for another off the dial.

Resistance to rotation of pulley

Service limit:
Maximum load; 9.22 N (0.94 kg, 2.07 lb) or less

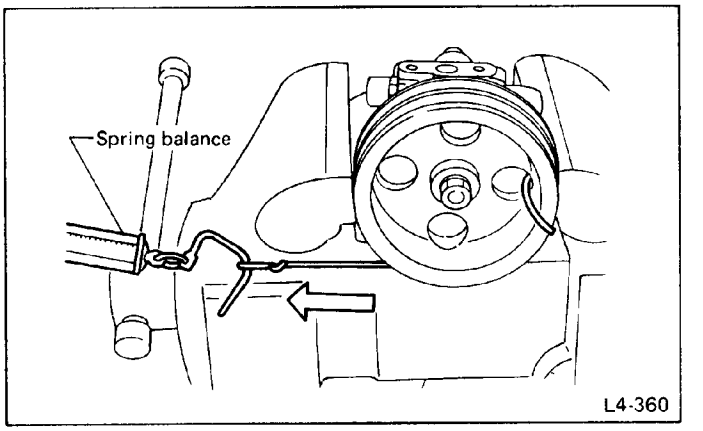

Fig. 163

A rather higher value may be indicated when pulley starts turning.
Measure the load during rotation and make a judgement.

OIL LEAKING POINTS

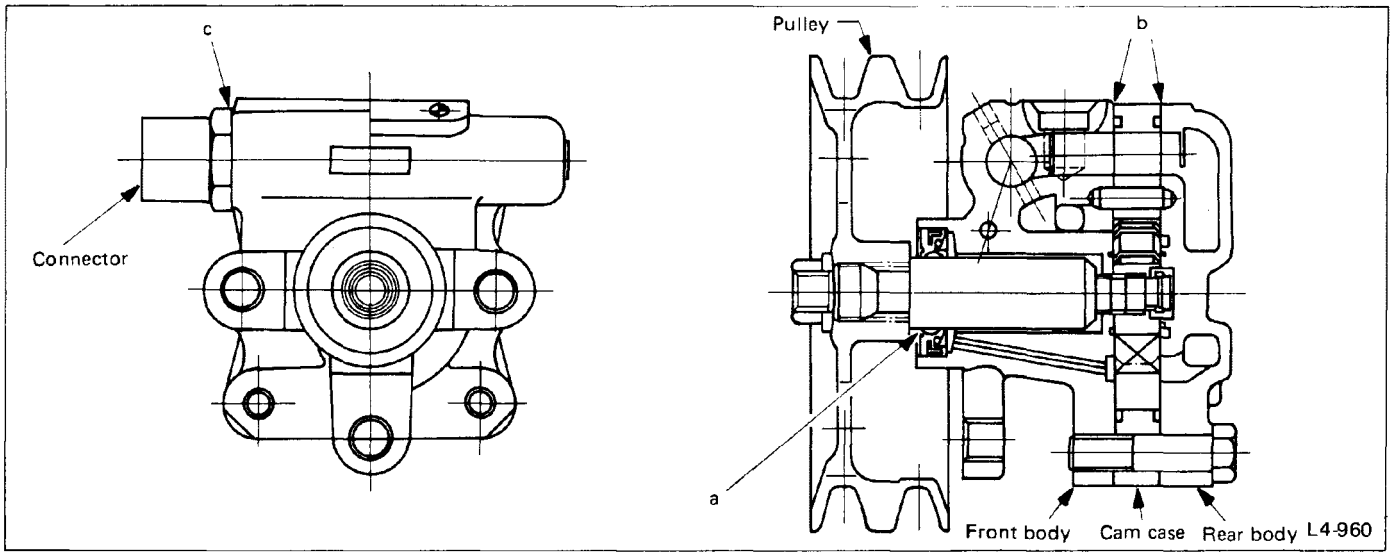

Fig. 164

a. Even when a possible oil leaking point is identified, chances are the oil comes from other parts. To make it doubly certain, proceed as follows: With the leaked oil wiped off, turn steering wheel 30 to 40 times fully clockwise and counterclockwise (with the engine kept running). Check for oil leaks immediately, and in several hours, after this operation.
b. Before attempting to repair oil leaks, clean the pump & tank ASSY, hoses, and surrounding parts. Clean also after completing the repair work.

1) Oil leaking from "a"
It is because the oil seal is damaged. Replace the oil seal and other parts that have been damaged during disassembly with new ones.
2) Oil leaking from "b"
The bolt is either damaged or left loose. If damaged, replace it with a new one. If left loose, tighten four bolts evenly to specified torque. If neither of above is responsible for leak, O-ring or seal washer is probably damaged. Replace the damaged part with a new one.
3) Oil leaking from "c"
The connector is either damaged or left loose. If damaged, replace it with a new one; if loose, tighten to specified torque. If neither is responsible for leak, O-ring is damaged. Replace it with a new one.

DISASSEMBLY

When securing the pump with a vise, apply wood pieces to protect pump from damage.

1) Spool valve ASSY
(1) Remove connector and separate O-ring.

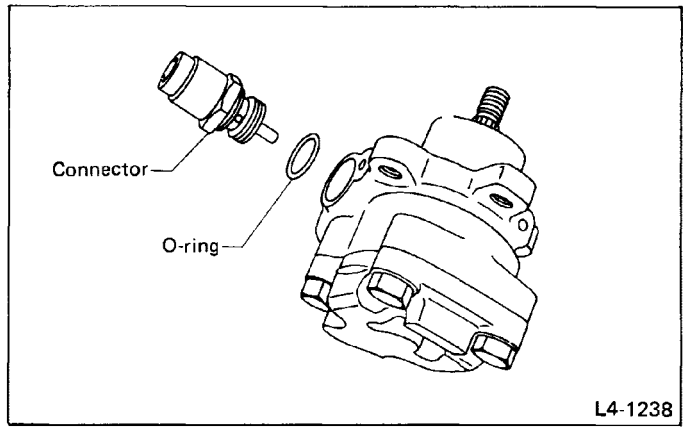

Fig. 165

(2) With front body tilted, remove spool valve and spring.

Use care not to drop spool valve and spring causing damage.

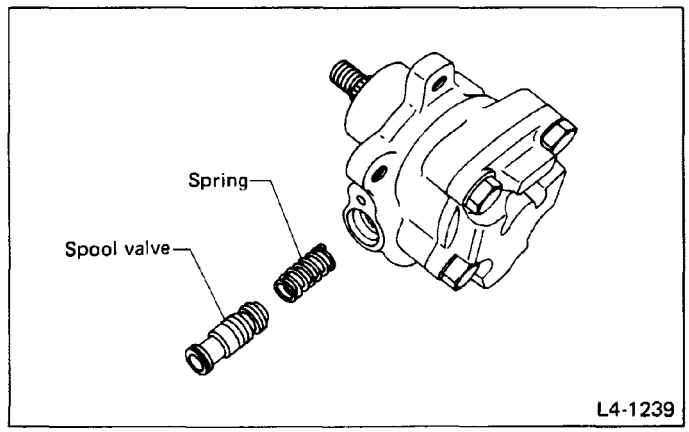

Fig. 166

2) Rear body
(1) With front body clamped in vise, remove four bolts to separate rear body.
(2) Remove gasket.

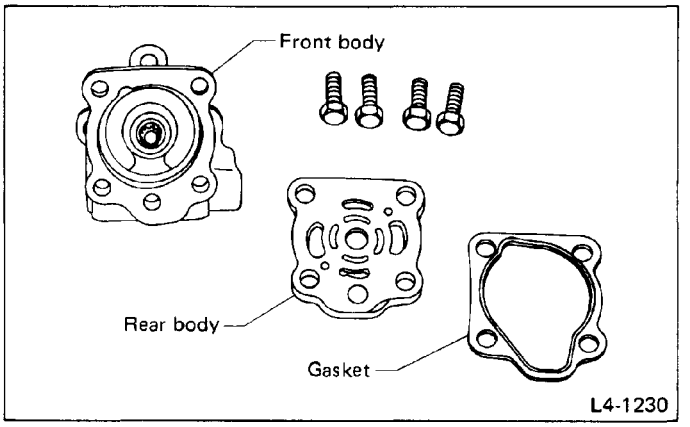

Fig. 167

3) Cartridge ASSY
(1) Remove cartridge ASSY from front body.
(2) Cartridge ASSY consists of a rotor, ten vanes and a cam.

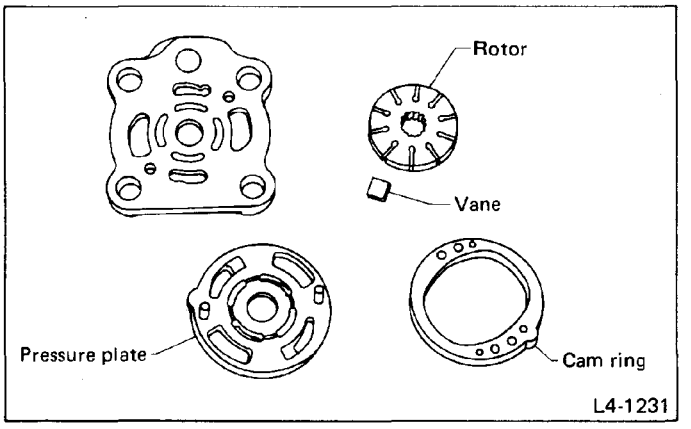

Fig. 168

4) Pressure plate
(1) Remove pressure plate and O-ring.
(2) Remove pin from pressure plate.

5) Front body
(1) Remove retaining ring from inner groove on the pulley side of front body. Remove drive shaft by tapping the end (on the cartridge side) with a plastic hammer.
(2) Remove oil seal using a standard screwdriver.

a. If shaft is hard to remove, tap it with a plastic hammer.
b. Use care to prevent damaging or denting front body end face or front body internal surface which is sealed.
c. Note that bearing is non-reusable.

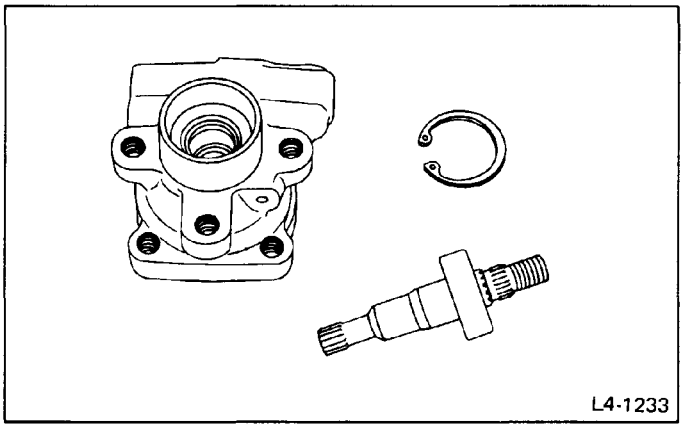

Fig. 169

6) Oil seal
Using a screwdriver, pry off oil seal fitted into front body.

Use care to prevent damage to front body internal surfaces.

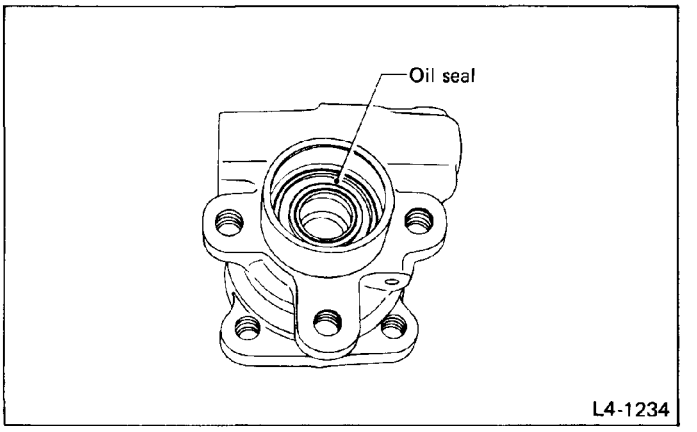

Fig. 170

INSPECTION

Perform following inspection procedures and repair or replace defective parts.

No.	Part name	Description	Remedy
1.	Front body	1) Damage on body surfaces 2) Excessive wear on hole into which control valve is inserted. 3) Wear and damage on cartridge ASSY mounting surface 4) Wear and damage on surfaces in contact with shaft and oil seal 5) Wear or damage to ball bearing or bushing	Replace with a new one together with control valve as selective fit is made.
2.	Rear body	1) Damage on body surfaces 2) Wear and damage on sliding surfaces	Replace with a new one.
3.	Shaft	1) Shaft bend 2) Wear and damage on surfaces in contact with bushing and oil seal 3) Wear and damage on rotor mounting surfaces	Replace with a new one.
4.	Pressure plate	Wear and damage on sliding surfaces	Replace with a new one.
5.	Cam case	1) Damage on inner surfaces 2) Damage on O-ring fitting grooves	Replace with a new one.
6.	Cam ring	Ridge wear on sliding surfaces	If damage is serious, replace with a new cartridge ASSY.
7.	Vane	Excessive wear on nose radius and side surfaces	
8.	Rotor	1) Wear and damage on sliding surfaces 2) Ridge wear on vane sliding grooves (If light leaks with vane in slit against light source)	
		3) Damage resulting from snap ring removal	Correct with oil stone. If damage is serious, replace with a new cartridge ASSY.
9.	Control valve	Damage or burrs on sliding surface periphery	Replace with a new one together with front body as selective fit is made.
10.	Connector	Damage on threads	Replace with a new one.
11.	Spring	Damage	Replace with a new one.
12.	Bolts and nuts	Damage on threads	Replace with a new one.

ASSEMBLY

1) Reassembly precautions
(1) Whenever O-rings, oil seals, and snap rings are removed, they must be replaced with new ones.
(2) Thoroughly wash parts and allow to dry. They must be kept free from cleaning oil and dust.
(3) Reassembly procedure must be performed in clean place. Ensure that parts are kept away from waste threads or other dust particles.
(4) Cleaning oil tends to stay inside the front body. Remove it completely by blowing compressed air.
(5) Ensure that parts are free from rust. (Use specified hydraulic oil for rust prevention after cleaning and drying.)

2) Shaft
(1) Apply grease to oil seal and front body internal surfaces.

Make sure that the front body internal surfaces are free from damage.

(2) Using INSTALLER (926970000), press-fit oil seal into front body.

a. Orient oil seal toward correct direction.
b. When press-fitting, use care to prevent damage to surface mating with rear body.

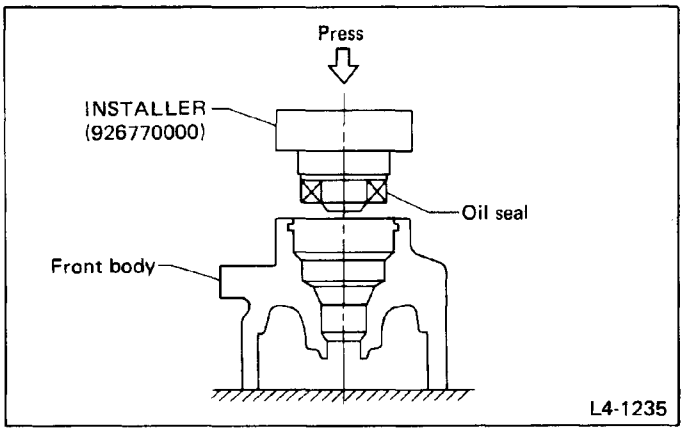

Fig. 171

(3) Using GUIDE (926980000), install bearing onto shaft.
Install retaining ring on oil seal. Insert shaft & bearing ASSY into place, and lock with retaining ring.
(4) With pulley side of front body facing down, install two types of O-rings, pressure plate and shaft on front body, in that order.

Always use new O-rings.

After installation, make sure that shaft is inserted flush with GUIDE (926830000) end face.

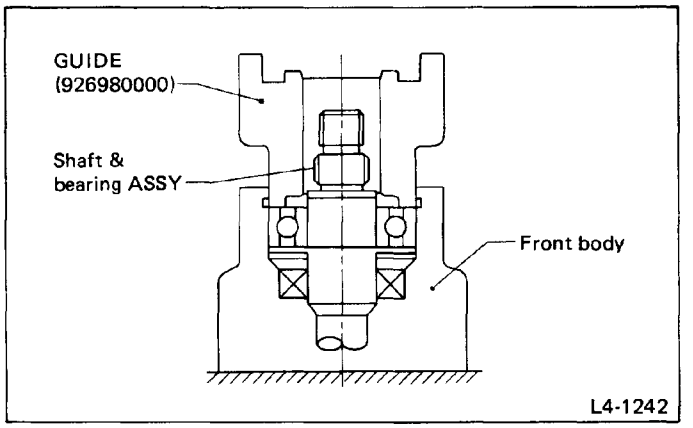

Fig. 172

3) Cartridge ASSY
(1) Install cam, rotor and vanes, in that order.
(2) Insert pin into hole in cam, and insert cartridge ASSY into pressure plate.

a. Make sure vanes are installed with R marks facing the cam.
b. Check that vanes move smoothly.
c. Apply a coat of DEXRON ATF to vanes.

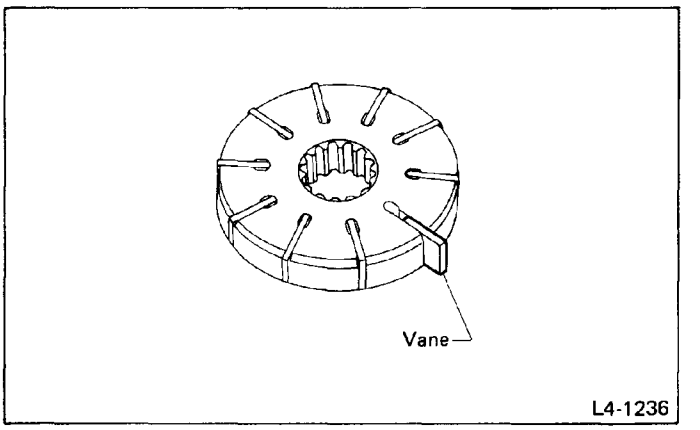

Fig. 173

4) Rear body
(1) Align pin with hole in rear body using a gasket, and install rear body.
(2) First tighten all bolts in a criss-cross fashion to one-half of specified torque, then to the specified torque.

Tightening torque:
49 – 59 N·m (5.0 – 6.0 kg-m, 36 – 43 ft-lb)

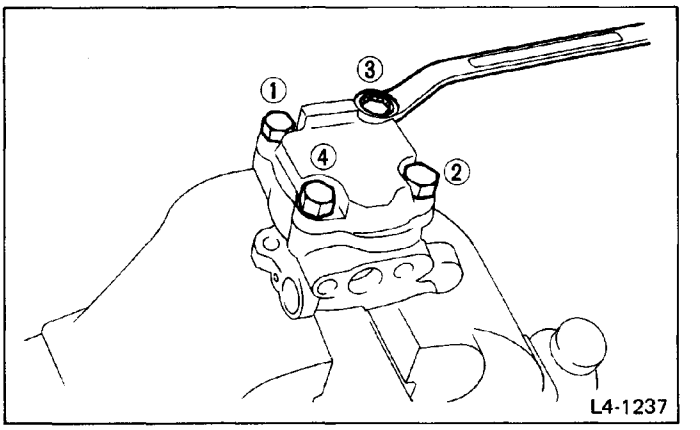

Fig. 174

a. After tightening the rear body, make sure shaft turns smoothly by hand.
b. Always use new O-rings.

5) Spool Valve ASSY
(1) Install spring into front body. Then, with spool valve ASSY dipped in specified hydraulic oil, install it into the front body.

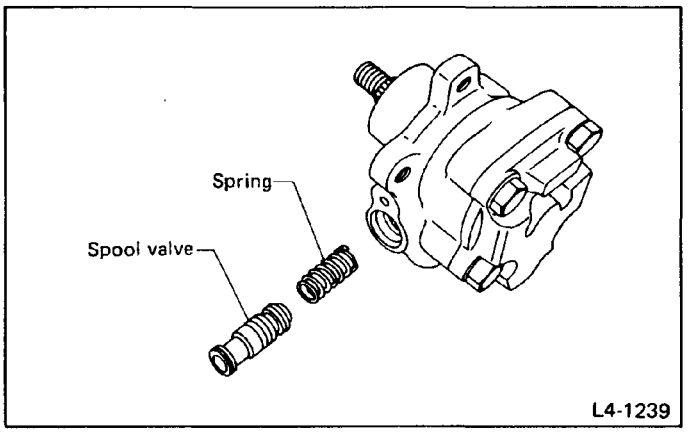

Fig. 175

(2) Using a 5-mm-dia. round bar, ensure that valve moves smoothly.
(3) Set O-ring, with grease applied to it, onto connector and secure connector to front body.

Tightening torque:
29 – 39 N·m (3.0 – 4.0 kg-m, 22 – 29 ft-lb)

a. Use care to prevent damage to O-ring at installation.
b. When tightening connector, ensure that O-ring does not protrude or get caught.

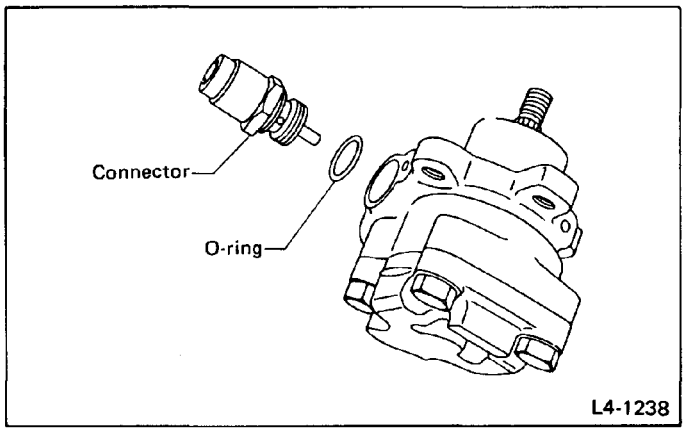

Fig. 176

6) Check
(1) When reassembly procedures have been completed, turn shaft by hand to ensure it turns smoothly. If it binds or other unusual conditions are evident, disassemble again and check for foreign matter trapped on sliding surfaces and improper installation. Eliminate the cause of trouble.
(2) Check followings by referring to "CHECK" article.
- Excessive play in pulley shaft
- Ditch deflection of pulley
- Resistance to rotation of pulley
- Measurement of generated oil pressure

INSTALLATION

1) Install bracket on engine.

Tightening torque:
18 – 22 N·m (1.8 – 2.2 kg-m, 13 – 16 ft-lb)

2) Install oil pump on oil tank as follows outside the vehicle:

Prior to installation, make sure that all oil is removed from oil pump, oil tank and pipe.

(1) Connect pipe E to oil pump.

Tightening torque:
10 – 20 N·m (1.0 – 2.0 kg-m, 7 – 14 ft-lb)

Use two wrenches, one on the pump side and the other on pipe E, to tighten the pipe at the specified degrees to the center line of the pump shaft.

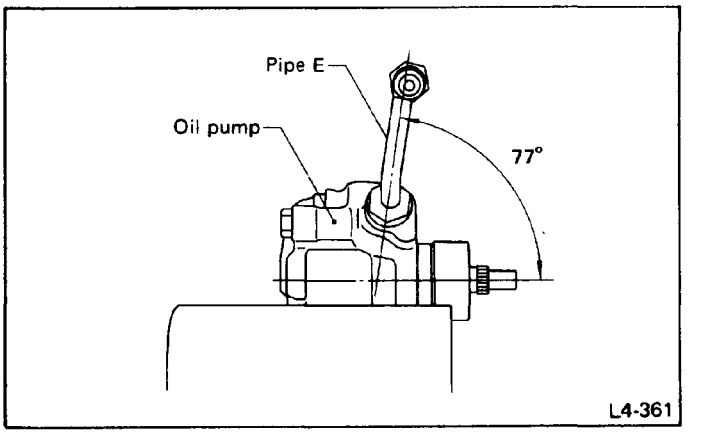

Fig. 177

(2) Install an O-ring on the oil passage located at the bottom of oil tank.

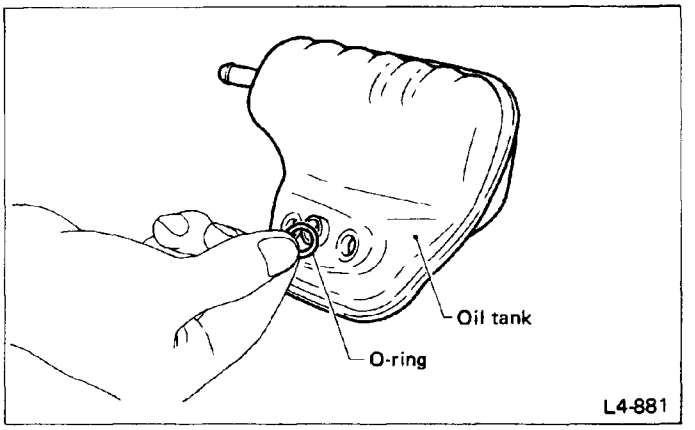

Fig. 178

a. Be sure to insert O-ring gradually. Otherwise, it will not remain in position.
b. Be careful not to allow foreign matter to enter the passage.

(3) Insert the oil flow passage of oil tank into the center hole on the upper side of oil pump and temporarily tighten bolts.

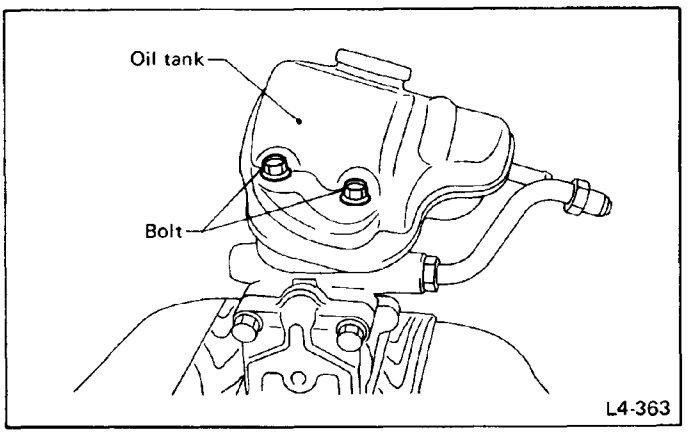

Fig. 179

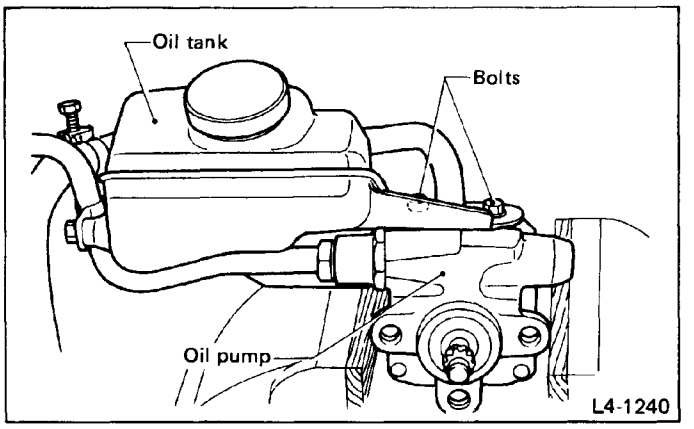

Fig. 180

3) Install oil pump, previously assembled to oil tank, on bracket.

Tightening torque:
29 – 49 N·m (3 – 5 kg-m, 22 – 36 ft-lb)

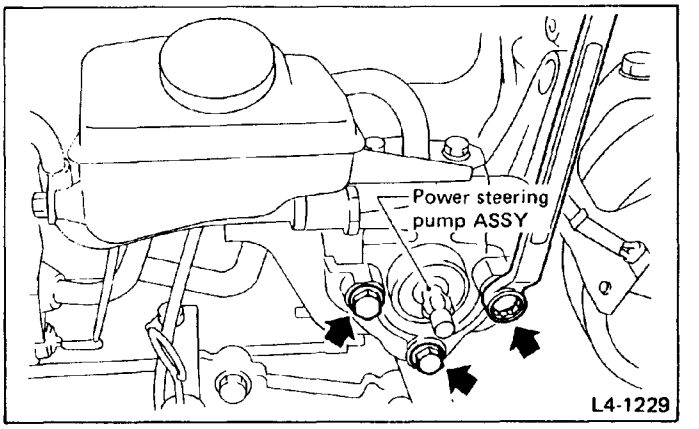

Fig. 181

4) Secure oil tank stay to bracket.

Tightening torque:
20 – 24 N·m (2.0 – 2.4 kg-m, 14 – 17 ft-lb)

5) Place oil pump pulley and tighten nut temporarily.
6) Tighten bolts on the upper surface of oil tank.

Tightening torque:
20 – 29 N·m (2.0 – 3.0 kg-m, 14 – 22 ft-lb)

7) Secure pipe E to oil tank by clamp.

Tightening torque:
5 – 8 N·m (0.5 – 0.8 kg-m, 3.6 – 5.8 ft-lb)

8) Interconnect hoses A and B.

Tightening torque:
Hose clip
2 – 3 N·m (0.2 – 0.3 kg-m, 1.4 – 2.2 ft-lb)
Joint nut
10 – 20 N·m (1.0 – 2.0 kg-m, 7 – 14 ft-lb)

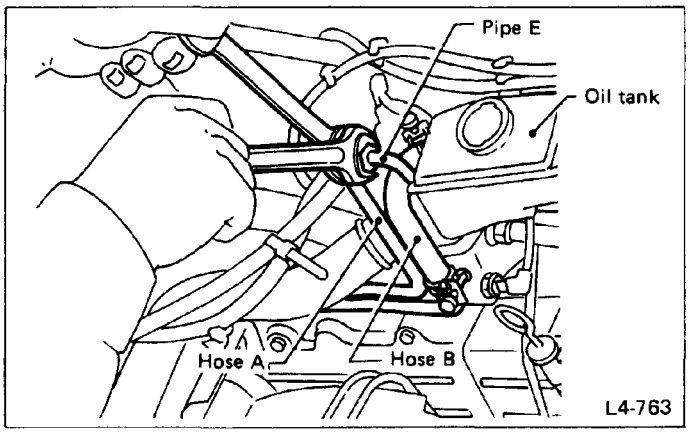

Fig. 182

If a hose is twisted at this step, the hose may come into contact with some other parts.

9) Adjust pulley belt tension. (For details, refer to 1. Drive Belt(s) [Except Camshaft] in Chapters 1–5.)
And then tighten oil pump pulley nut to the specified torque.

Tightening torque:
42 – 62 N·m (4.3 – 6.3 kg-m, 31 – 46 ft-lb)

10) Connect minus terminal of battery.
11) Feed the specified fluid and discharge air. (For details, refer to the section regarding fluid line.)

Never start the engine before feeding the fluid; otherwise vane pump might be seized up.

Fluid Line (Power Steering System)

REMOVAL

Improper removal and installation of parts often causes fluid leak trouble. To prevent this, disassembling of connectors and joints must be kept to a minimum, clean the surrounding portions before disassembly and reassembly, and pay special attention to keep dirt and other foreign matter from mating surfaces.

1) Disconnect ground cable from battery.
2) Disconnect thermo sensor connector.
3) Lift up vehicle.
4) Remove front exhaust pipe ASSY. Refer to "EXHAUST SYSTEM".
5) Remove jack-up plate and clamp A.
6) Disconnect pipe joint at the center of gearbox ASSY, and connect vinyl hoses to pipe and joint. Discharge fluid by turning steering wheel to the right and left. Discharge fluid in the same way from the other pipe.

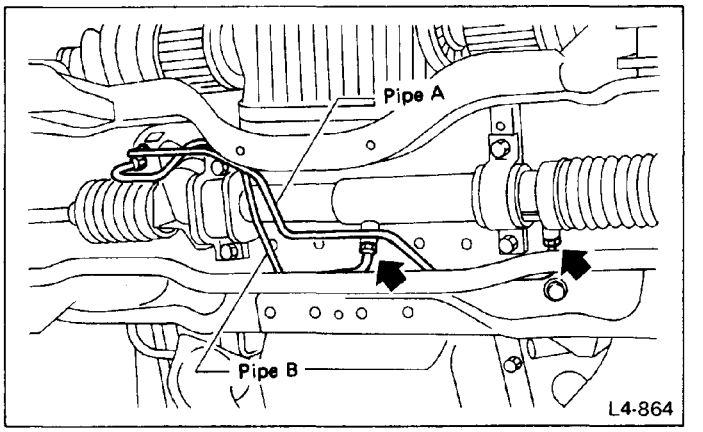

Fig. 183

7) After discharging fluid, disconnect pipes A and B from gearbox ASSY.

a. Be careful not to bend pipes.
b. Do not allow dirt and other foreign matter to come in contact with pipe seal, joint, and threaded hole of gearbox pipe joint.

8) Remove pipes C and D from control valve of gearbox ASSY.

a. Disconnect upper pipe D first, then disconnect lower pipe C.
b. Be careful not to damage pipe end face.

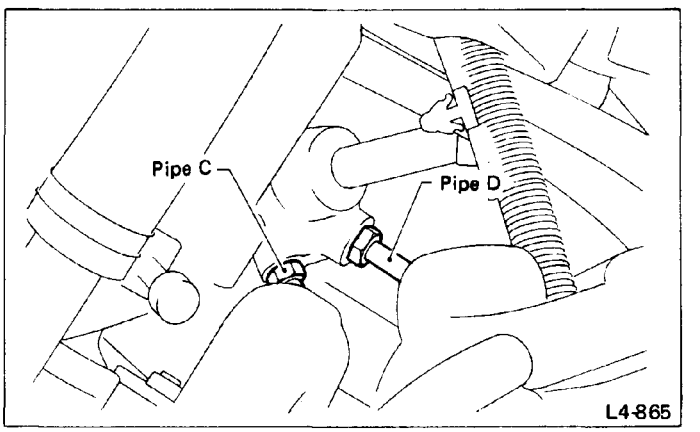

Fig. 184

9) Remove flange bolt securing hoses A and B in position.

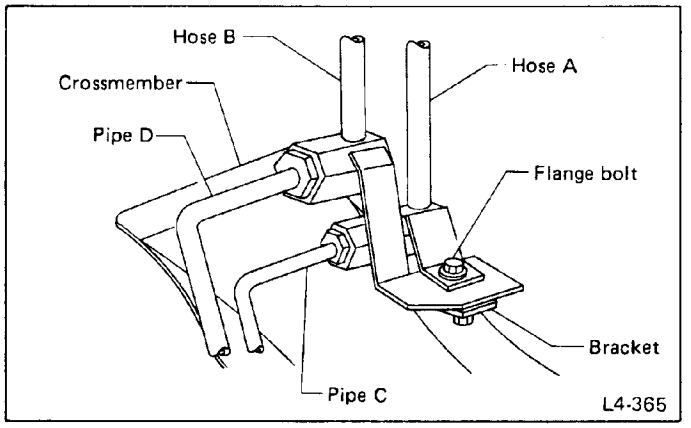

Fig. 185

10) Disconnect hose A from pipe C, hose B from pipe D.
11) Remove pipes C and D through the clearance between crossmember and oil pan.

a. Be careful not to bend pipes.
b. Do not allow dirt and other foreign matter to come in contact with pipe seal, joint, and threaded hole of gearbox pipe joint.

12) Disconnect hose A from pipe E. Disconnect hose B from oil tank.

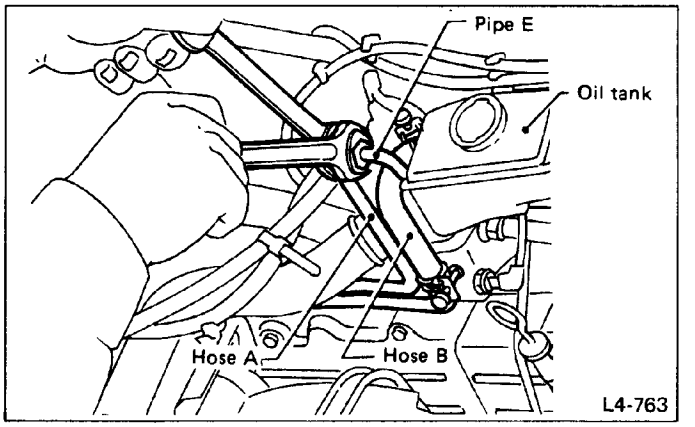

Fig. 186

a. When disconnecting hose A, use two wrenches to prevent pipe E from twisting.
b. Be sure to use wrenches having square and undeformed jaws; otherwise, flats on joint may be damaged.
c. Do not allow fluid from the hose end to come into contact with pulley belt.
d. To prevent foreign matter from entering the hose and pipe, cover the open ends of them with a clean cloth.

13) Remove flange bolt of clamp B.
14) Remove flange bolt of clamp C.
15) Remove hoses A and B.
16) Disconnect pipe E from oil pump. Refer to "Removal and installation of oil pipe".

INSPECTION

Inspect all removed parts for wear and damage, replace them if necessary.

No.	Parts	Inspection	Corrective action
1	Pipes	(1) Damage to flared surface (2) Damage to flare nut (3) Damage to pipe	Replace the pipe with a new one.
2	Clamp A	Deterioration of the hold on pipe	Replace the clamp with a new one.
3	Clamp B	Deterioration of the hold on hose	Replace the clamp with a new one.
	Clamp C		
4	Hoses	(1) Damage to flared surface (2) Damage to flare nut (3) Crack on hose surface (4) Swollen hose (5) Wear of hose surface (6) Damage to adapter	Replace the hose with a new one.
		(7) Damage to hose clip	Replace it with a new one.

INSTALLATION

1) Connect pipe E to oil pump.

Tightening torque:
10 – 20 N·m (1.0 – 2.0 kg-m, 7 – 14 ft-lb)

a. Attach pipe E so that it forms the specified angle to the oil pump axis.
b. Be careful not to damage oil pump pulley and oil tank. If proper tool is unavailable, remove oil tank and oil pump pulley before disconnecting pipes.

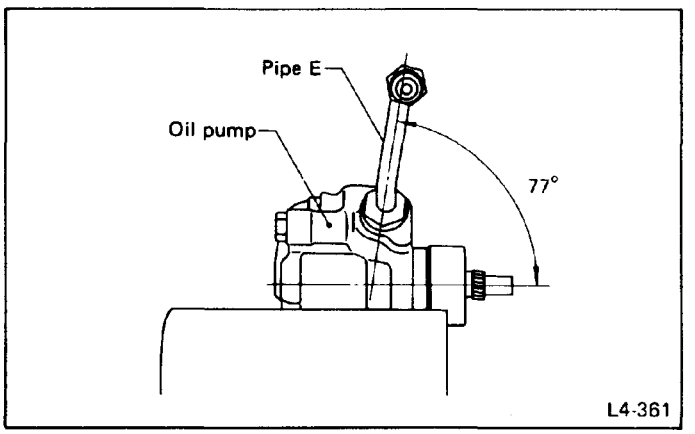

Fig. 187

2) Connect hose A to pipe E and hose B to oil tank. Refer to "Removal and installation of oil pump".
3) Install hose A to pipe C and hose B to pipe D.

Tightening torque:
10 – 20 N·m (1.0 – 2.0 kg-m, 7 – 14 ft-lb)

Tighten hose A first, and hose B second.

4) Fix hoses A and B to bracket on crossmember by tightening flange bolt.

a. Place hose A stay on hose B stay.
b. Install hoses A and B in vertical position.

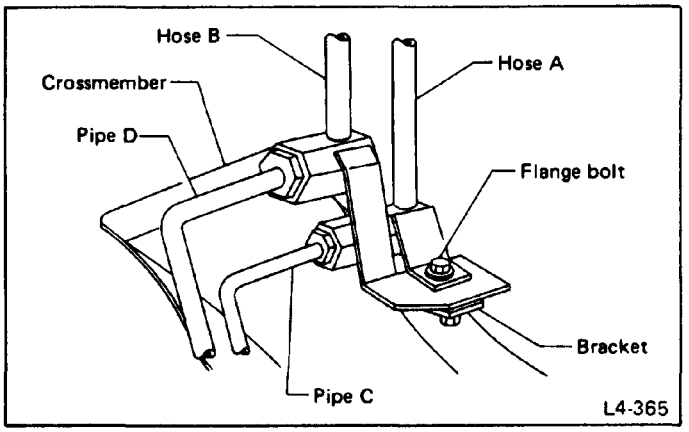

Fig. 188

5) Install pipes C and D to gearbox ASSY.

Tightening torque:
10 – 20 N·m (1.0 – 2.0 kg-m, 7 – 14 ft-lb)

Tighten pipe C first, and pipe D second.

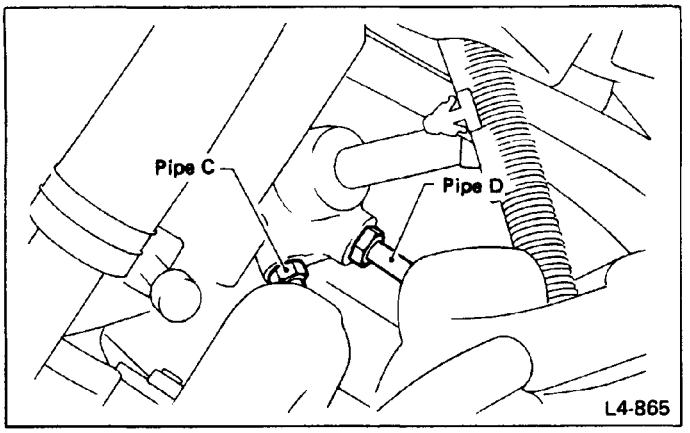

Fig. 189

6) Install clamp C to hoses A and B, and tighten with flange bolt.

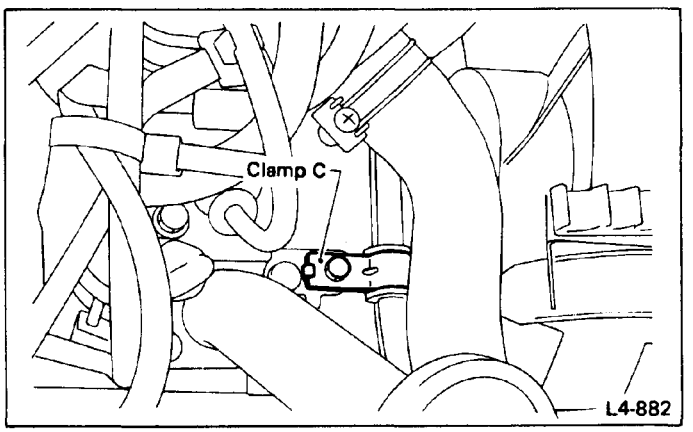

Fig. 190

7) Install clamp B to hoses A and B, and tighten with flange bolt.

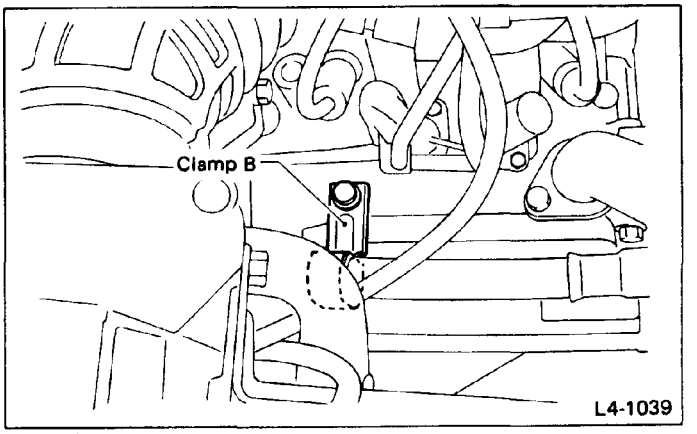

Fig. 191

8) Connect pipes A and B to four joints of gearbox ASSY.

Tighten upper pipe B first, and lower pipe A second.

Tightening torque:
10 – 16 N·m (1.0 – 1.6 kg-m, 7 – 12 ft-lb)

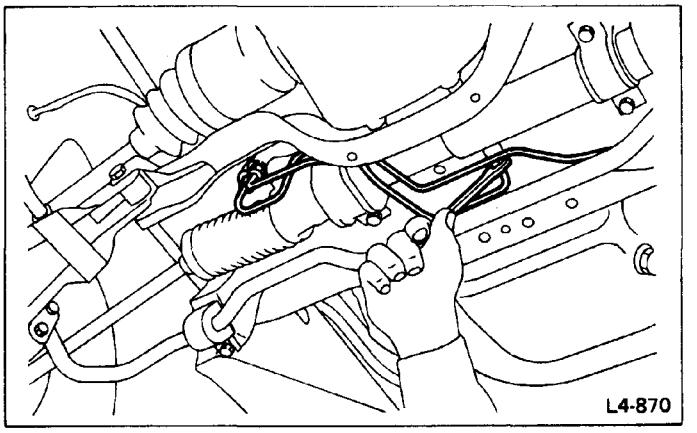

Fig. 192

9) Install jack-up plate and clamp A.
10) Install front exhaust pipe ASSY.
Refer to "EXHAUST SYSTEM".
11) Install exhaust sensor connector.
12) Connect ground cable to battery.
13) With vehicle raised, feed the specified fluid and discharge air as follows.

Recommended fluid (ATF DEXRON II)	
B.P.	B.P. Autran DX
CALTEX	Texamatic fluid 6673 Dexron
CASTROL	CASTROL TQ Dexron
MOBIL	MOBIL ATF 220
SHELL	SHELL ATF Dexron
TEXACO	Texamatic fluid 6673 Dexron

(1) Feed the specified fluid with its level being about 4 cm (1.6 in) lower than the mouth of tank.
(2) Continue to turn steering wheel slowly from lock to lock until bubbles stop appearing in the tank while keeping the fluid at that level.

In case air is absorbed to deliver bubbles into piping because the fluid level is lower, leave it about half an hour and then do the step (2) all over again.

(3) Start, and idle the engine.
(4) Continue to turn steering wheel slowly from lock to lock again until bubbles stop appearing in the tank while keeping the fluid at that level.
It is normal that bubbles stop appearing after three times turning of steering wheel.

In case bubbles do not stop appearing in the tank, leave it about half an hour and then do the step (4) all over again.

(5) Stop the engine, and take out safety stands after jacking up vehicle again.
Then lower the vehicle, and idle the engine.
(6) Continue to turn steering wheel from lock to lock until bubbles stop appearing and change of the fluid level is within 3 mm (0.12 in).

In case the following happens, leave it about half an hour and then do step (6) again.
a. The fluid level changes over 3 mm (0.12 in).
b. Bubbles remain on the upper surface of the fluid.
c. Grinding noise is generated from oil pump.

14) Check the fluid leakage at flare nuts after turning steering wheel from lock to lock with engine running.

a. Before checking, wipe off any fluid on flare nuts and piping.
b. In case the fluid leaks from flare nut, it is caused by dust (or the like) and/or damage between flare and tapered seat in piping.
So remove the flare nut, tighten again it to the specified torque after cleaning flare and tapered seat. If flare or tapered seat is damaged, replace it with a new one.

15) Inspect fluid level on flat and level surface with engine "OFF" by indicator of filler cap.
If the level is at lower point or below, add fluid to keep the level in the specified range of the indicator. If at upper point or above, drain fluid by using a syringe or the like.

Fluid capacity:
0.7 ℓ (1.5 US pt, 1.2 Imp pt)

(1) Check at temperature 21°C (70°F) on reservoir surface of oil pump.

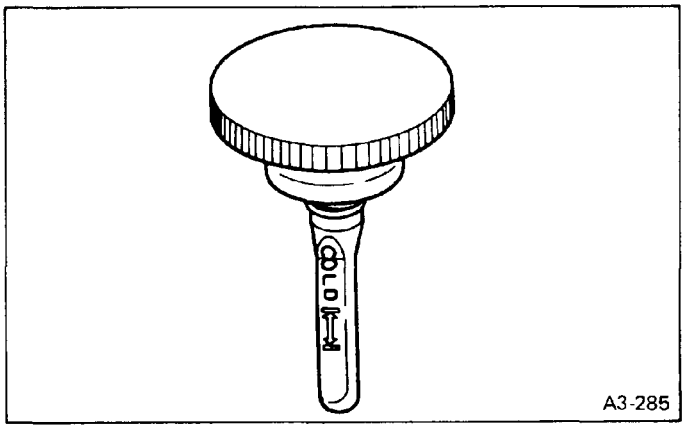

Fig. 193

(2) Check at temperature 60°C (140°F) on reservoir surface of oil pump.

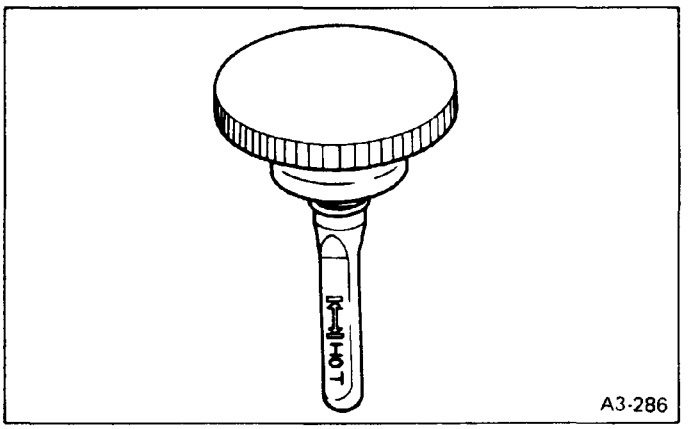

Fig. 194

Motor Pump & Power Controller

REMOVAL

1) Remove ground cable from battery.

2) Disconnect connectors between power controller and battery.

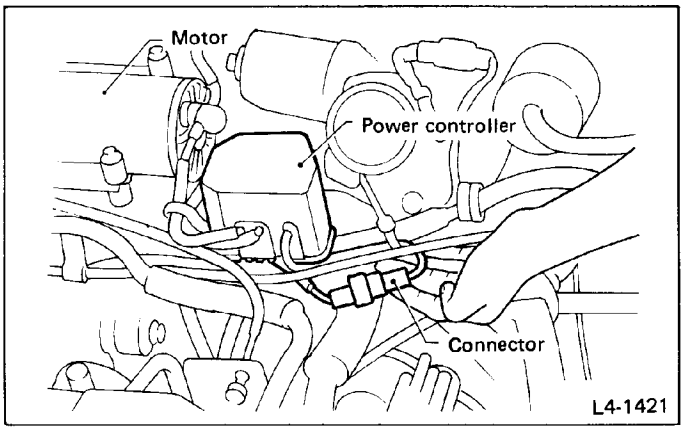

Fig. 195

3) Remove bolts which secure power controller, and remove controller ASSY.

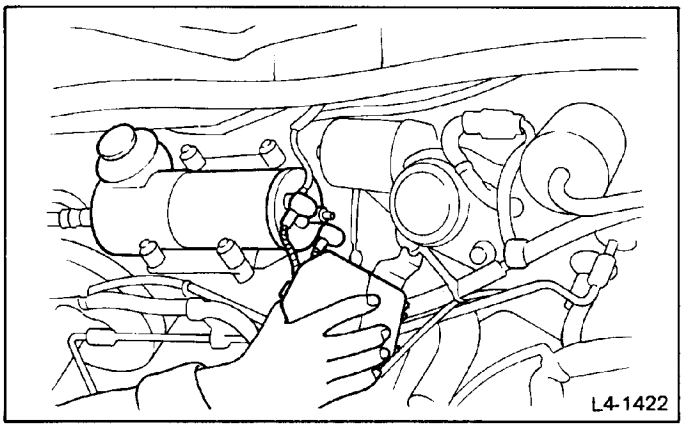

Fig. 196

4) Disconnect harnesses and ground lead.

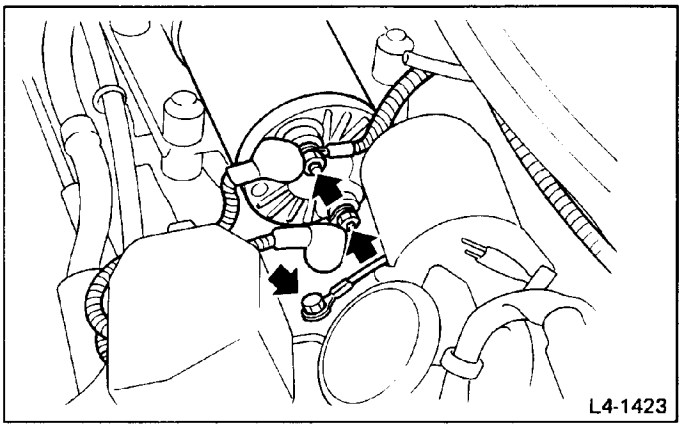

Fig. 197

5) Remove at least 0.3 ℓ (0.6 US pt, 0.5 Imp pt) of fluid from reservoir.

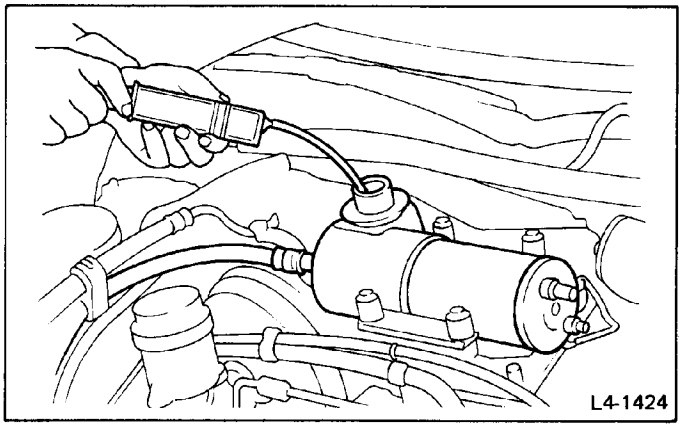

Fig. 198

6) Remove bolts and hoses from motor ASSY.

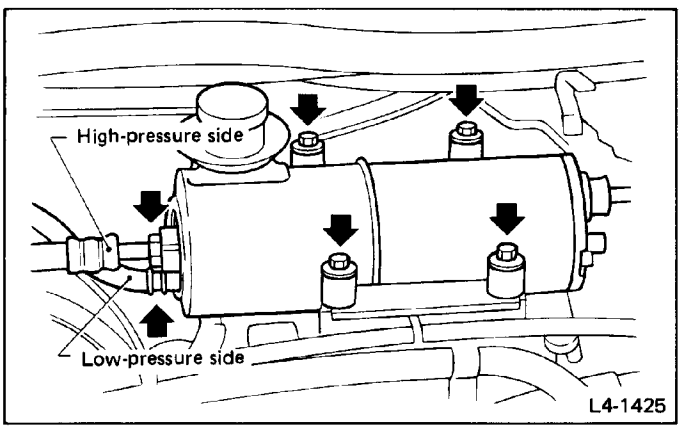

Fig. 199

7) Remove motor ASSY.

When disconnecting hoses, be careful not to spill fluid on any part of car body. Plug open ends of hoses with a rag to prevent dirt from entering.

DISASSEMBLY

Select a clean place free from dirt and dust before disassembly. Be careful not to scratch or damage disassembled parts.

1) Securely place STAND (927020000) in a vise and place motor ASSY on STAND.

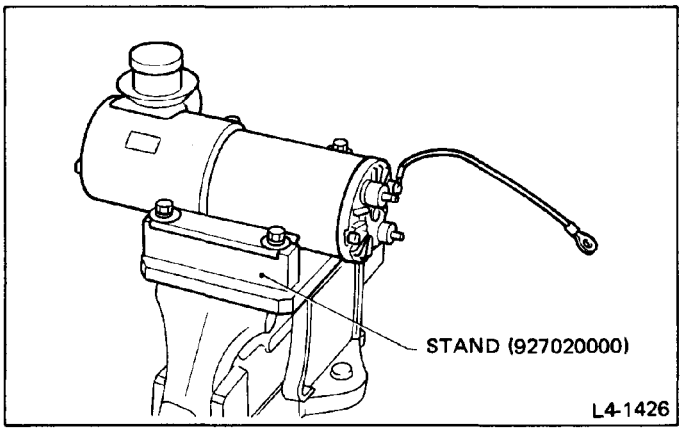

Fig. 200

2) Disconnect connector from discharge port.

Do not place motor ASSY directly in a vise as damage to magnet may result.

3) Remove cap. Lightly tap area around fluid filler with a plastic hammer and remove reservoir.

Always remove motor pump while holding it horizontally. Otherwise, fluid may spill on motor.

4) Rear body ASSY
   (1) Completely drain fluid from motor pump. Remove bolts from pump body with rear body facing up. Remove rear body ASSY.
   (2) Remove O-ring from rear body ASSY.

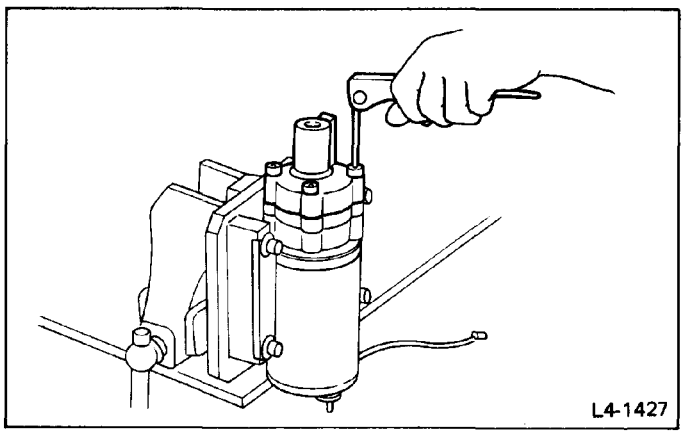

Fig. 201

5) Remove pressure plate.
6) Cartridge ASSY
   (1) Remove cam ring.

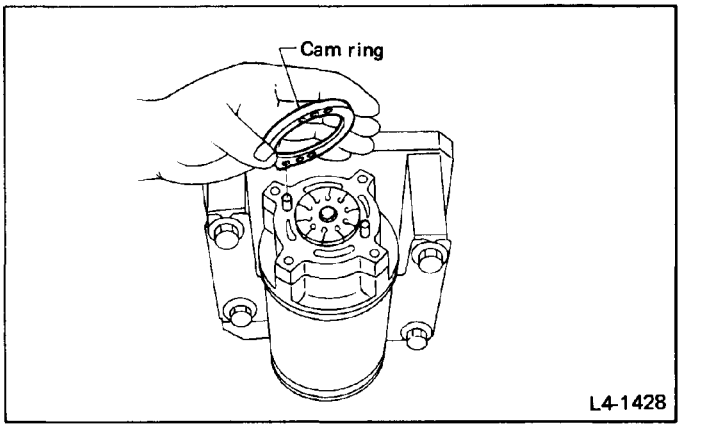

Fig. 202

   (2) Remove two straight (locating) pins.
   (3) Remove ten vanes.
   (4) Remove rotor.

The cartridge ASSY is the heart of motor pump. Be extremely careful not to scratch or damage it.

7) Front body ASSY
   (1) Extract front body while holding motor section horizontal.

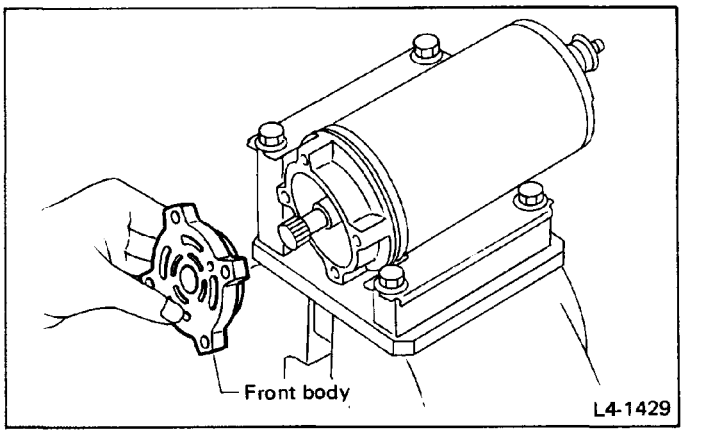

Fig. 203

   (2) Remove O-ring from groove at outer periphery of front body.

Be careful not to damage the frictional surface of front body rotor.

8) Using a screwdriver, drive oil seal out of front body.

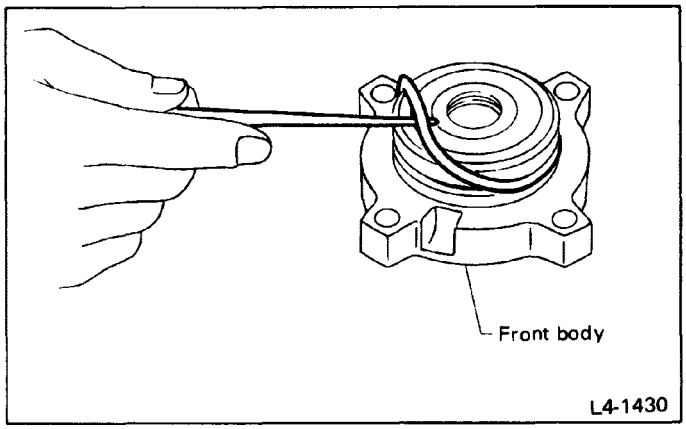

Fig. 204

INSPECTION

Perform following inspection procedures and repair or replace defective parts.

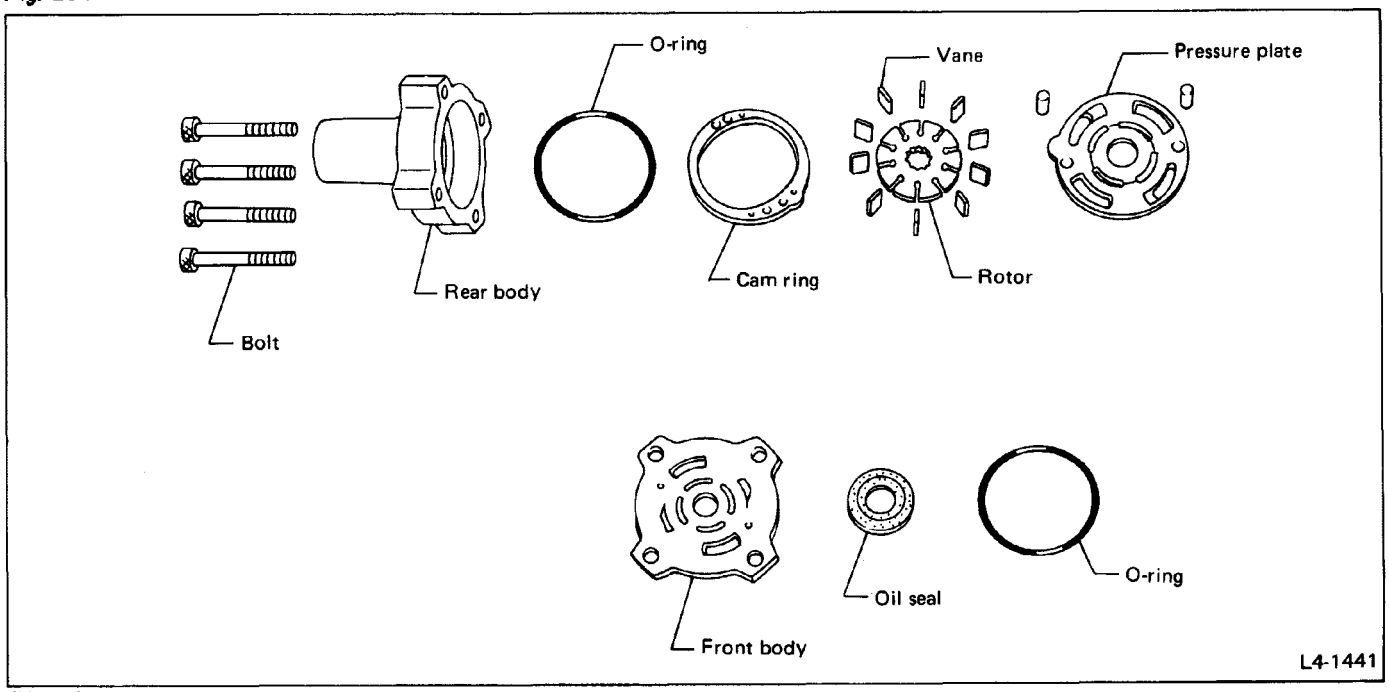

Fig. 205

No.	Part Name	Description	Remedy
1.	Front body	1) Damage on body surfaces 2) Wear and damage on sliding surfaces	Replace with a new one.
2.	Rotor	1) Wear and damage on sliding surfaces 2) Ridge wear on vane sliding grooves (If light leaks with vane in slit against light source)	If damage is serious, replace with a new cartridge ASSY.
3.	Vane	Excessive wear on nose radius and side surfaces	
4.	Cam ring	Ridge wear on sliding surfaces	
5.	Pressure plate	Wear and damage on sliding surfaces	Replace with a new one.
6.	Rear body	1) Damage on body surfaces 2) Wear and damage on sliding surfaces	Replace with a new one.
7.	Motor	Wear or damage on contact surfaces of oil seal and shaft	Replace with a new one.

ASSEMBLY

1) Oil seal assembly
   (1) Apply a coat of grease to outer periophery of oil seal and press oil seal into front body until it is flush with the surface.

Always use a new oil seal, and be sure to assemble.

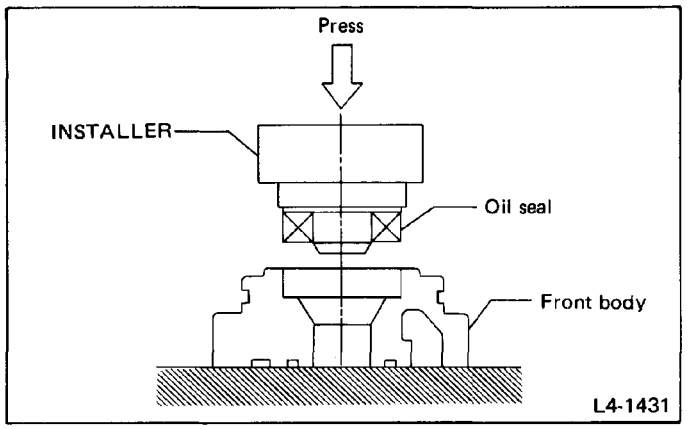

Fig. 206

2) Front body
   (1) Install O-ring in groove at outer periphery of front body.
   (2) Install front body with the bottom facing down when motor is installed. Insert motor shaft into place on the protrusion side of cover.

Always use a new O-ring, and be sure to assemble.

3) Cartridge ASSY
   (1) Install rotor by aligning it with shaft splines.
   (2) Insert two straight (locating) pins into front body.
   (3) Install cam ring.
   (4) Install 10 vanes into slits in rotor with the rounded sides facing cam.

a. Always use new rubber parts. Be careful not to allow these parts to be pinched or dislocated.
b. Apply a coat of specified grease to frictional surfaces of parts.
c. Check that front body and rotor vanes face in the proper direction.

Specified fluid
SPECIAL POWER STEERING FLUID [Part No. K0209A0080]

Specified grease for motor pump
VALIANT GREASE M2 [Part No. 003608001, net 0.5 kg (1.1 lb)]

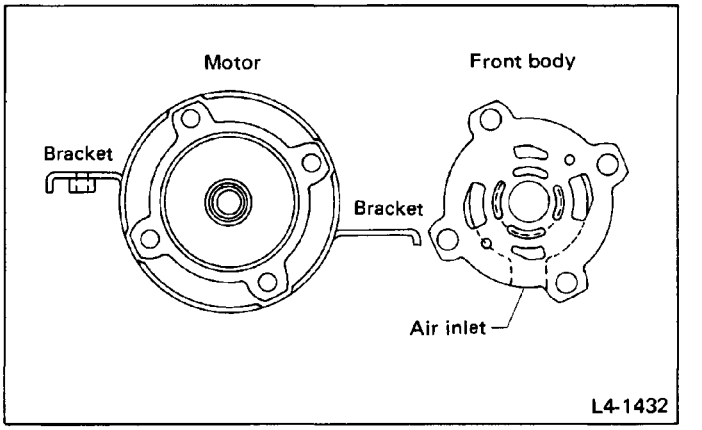

Fig. 207

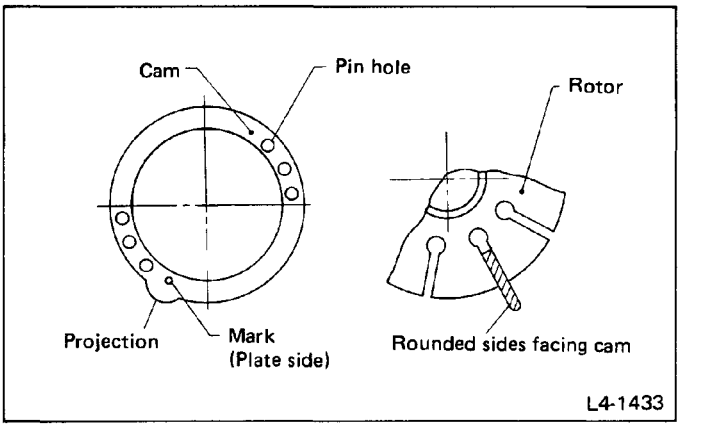

Fig. 208

4) Install pressure plate.
5) Rear body ASSY
   (1) First tighten all bolts in a criss-cross fashion to one-half of specified torque, then to the specified torque.

Tightening torque:
20 – 29 N·m (2.0 – 3.0 kg-m, 14 – 22 ft-lb)

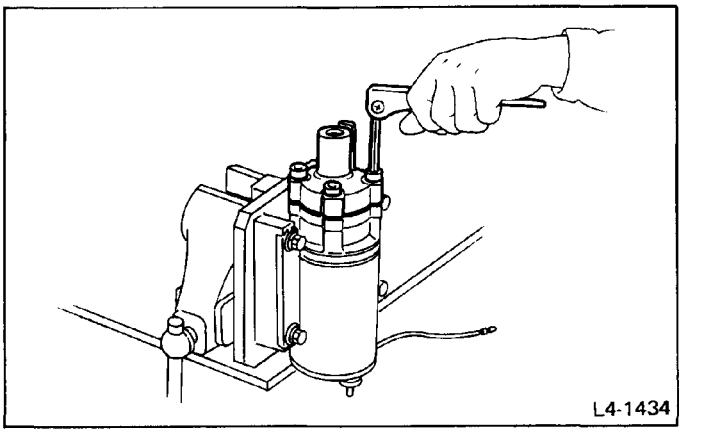

Fig. 209

6) Install reservoir ASSY.
7) Connect connectors.

Always use new O-rings, and be sure to assemble.

Tightening torque:
49 – 59 N·m (5.0 – 6.0 kg-m, 36 – 43 ft-lb)

8) Install cap, oil strainer and cap ASSY.
9) Install harness.

Tightening torque:
3.9 – 5.1 N·m (0.40 – 0.52 kg-m, 2.9 – 3.8 ft-lb)

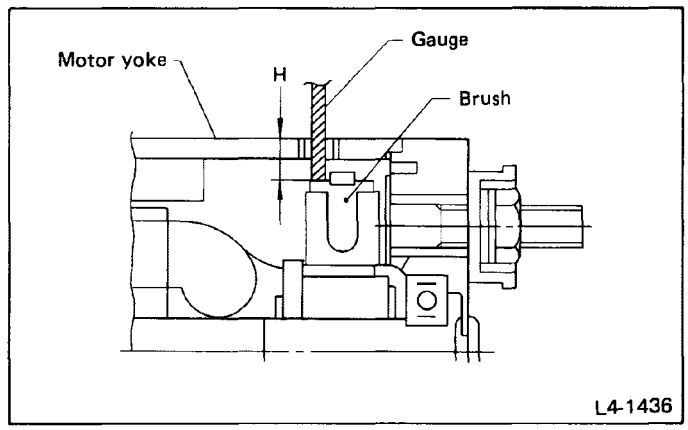

Fig. 211

Motor Brush

INSPECTION

1) Remove screws from outer periphery of yoke.
2) Insert a 2.5 to 3 mm (0.098 to 0.118 in) dia. gauge (insulated) vertically to yoke surface.
3) Measure dimension "H" from yoke surface. Replace brushes if "H" is within the 13.5 to 14 mm (0.531 to 0.551 in) range.

Standard (new)	:	**7.85 mm (0.0391 in)**
Replacement standard	:	**13.85 mm (0.5453 in)**
Service limit	:	**15.85 mm (0.6240 in)**

4) Install screws on periphery of yoke.

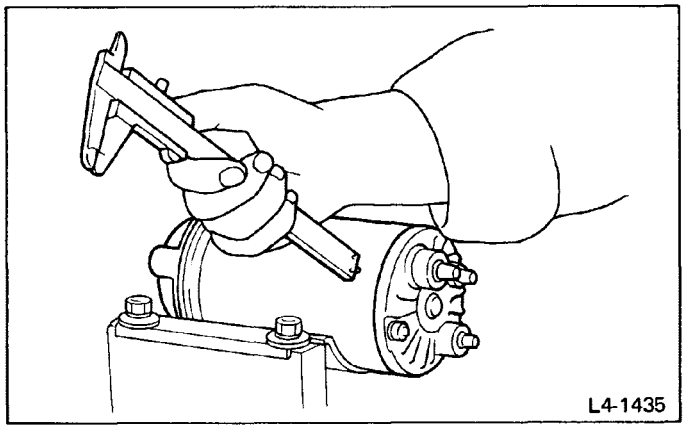

Fig. 210

REMOVAL

1) Remove two bolts from motor cover.

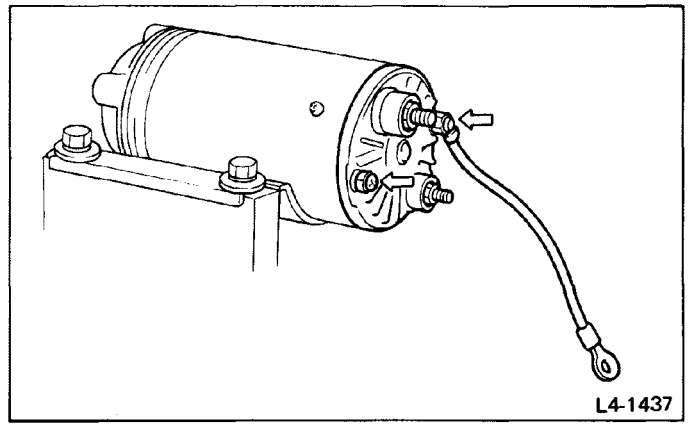

Fig. 212

2) Remove motor cover by prying its two grooves.

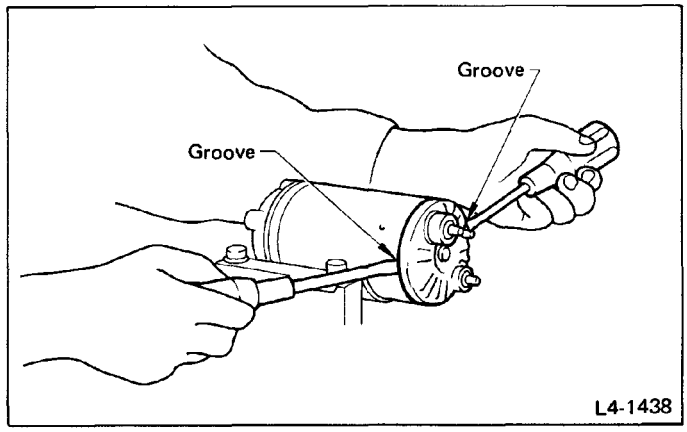

Fig. 213

3) Remove nuts and washers from brush lead terminals.

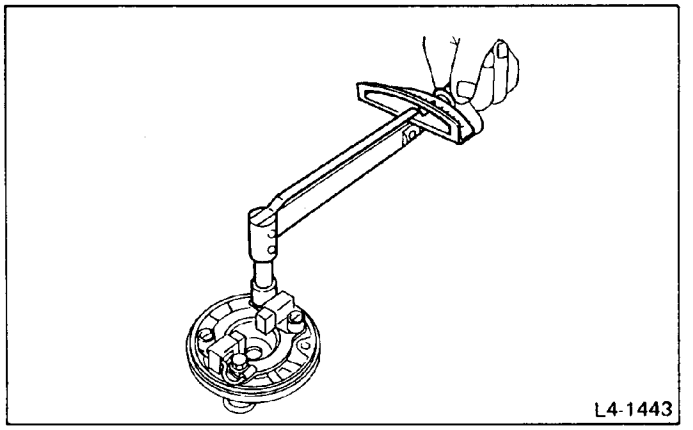

Fig. 214

4) Remove brushes while lifting brush springs.

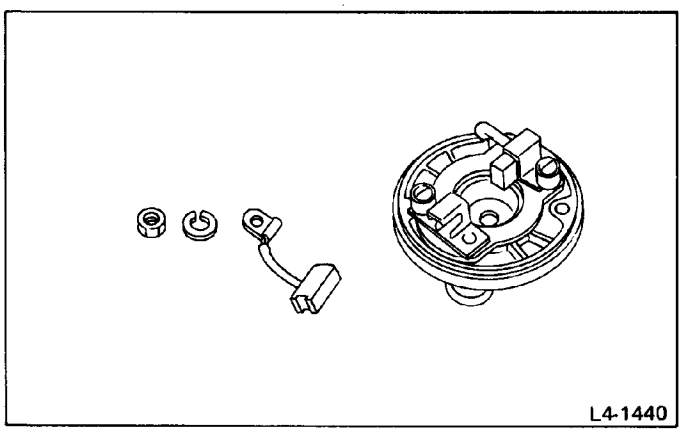

Fig. 215

Always replace both brushes (positive and negative sides) as a unit.

ASSEMBLY

1) Lift brush springs and install new brushes.

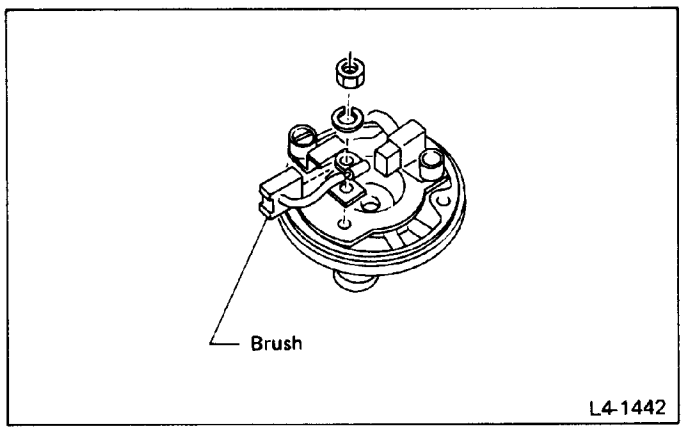

Fig. 216

2) Install new brush terminals to stud bolts and tighten with washers and nuts.

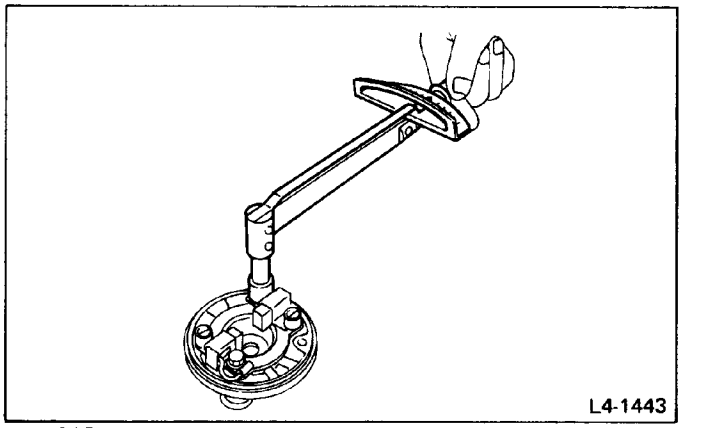

Fig. 217

3) Install washers and nuts to stud bolts and tighten.

Tightening torque:
3.9 – 5.1 N·m (0.40 – 0.52 kg-m, 2.9 – 3.8 ft-lb)

4) Secure harnesses with washers and nuts.

Tightening torque:
3.9 – 5.1 N·m (0.40 – 0.52 kg-m, 2.9 – 3.8 ft-lb)

a. Check that brushes face in the correct direction.

Tightening torque:
1.2 – 1.5 N·m (0.12 – 0.15 kg-m, 0.9 – 1.1 ft-lb)

b. Be careful to install brushes properly because of their polarity.
c. Always replace brushes (positive and negative sides) as a unit.

INSTALLATION

1) Secure pump ASSY to bracket above front bulkhead with bolts, and connect high and low pressure hoses.

Tightening torque:
23 – 42 N·m (2.3 – 4.3 kg-m, 17 – 31 ft-lb)

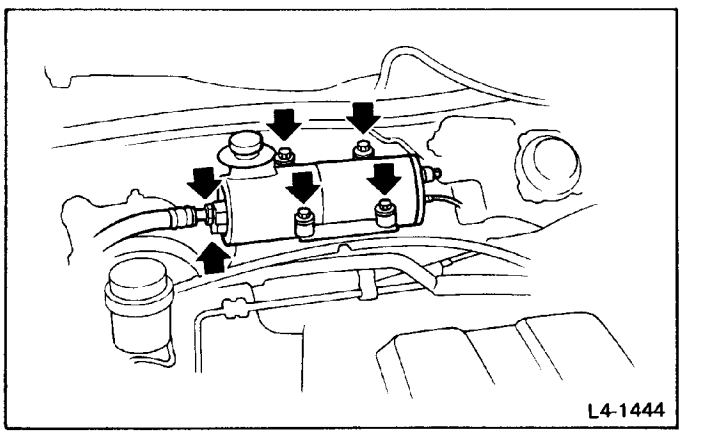

Fig. 218

2) Connect harnesses as shown in Figure 219.

Tightening torque: N·m (kg-m, ft-lb)
9.5 – 12.3 (0.97 – 1.25, 7.0 – 9.0)
3.9 – 5.1 (0.40 – 0.52, 2.9 – 3.8)

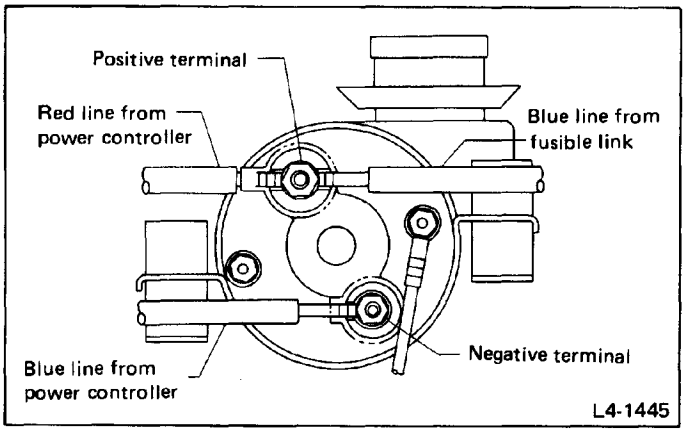

Fig. 219

3) Install power controller.

Tightening torque:
4.4 – 7.4 N·m (0.45 – 0.75 kg-m, 3.3 – 5.4 ft-lb)

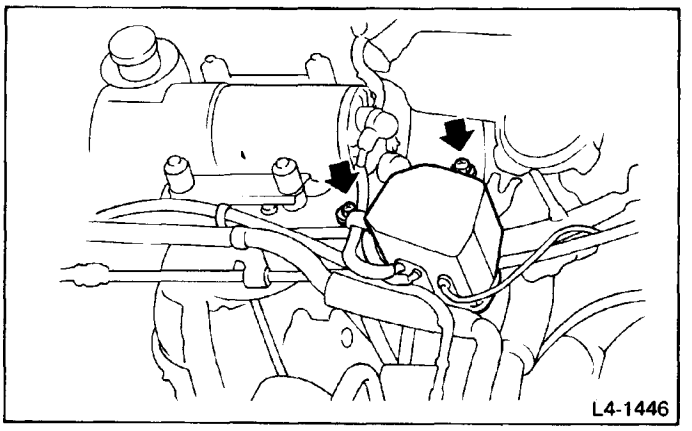

Fig. 220

4) Connect ground leads to power controller, motor pump and engine.

Be sure to securely tighten ground lead between engine and power controller because high current flows through it.

Tightening torque:
4.4 – 7.4 N·m (0.45 – 0.75 kg-m, 3.3 – 5.4 ft-lb)

5) Replenish specified oil and bleed air.

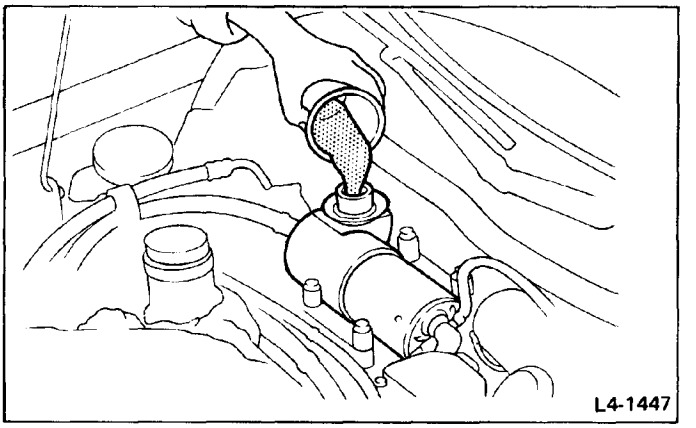

Fig. 221

Specified oil for motor pump
SPECIAL POWER STEERING FLUID [Part No. K0209A0080]

Oil quantity:
All systems . . . . . 0.65 ℓ (1.4 US pt, 1.1 Imp pt)
Oil tank . . . . . 0.25 ℓ (0.5 US pt, 0.4 Imp pt)

(1) Replenish specified fluid to 4 cm (1.6 in) below reservoir filler opening.
(2) Raise car with ignition switch OFF. Turn steering wheel from lock to lock until air bubbles disappear, as follows:

a. Turn steering wheel slowly from lock to lock at least ten times.
b. Thereafter, turn steering wheel from lock to lock by gradually increasing turning speed. Repeat ten times. Be careful not to allow fluid to overflow from filler opening.

(3) Idle engine with car raised.
(4) Slowly turn steering wheel fully to the left and then to the right until no air bubbles appear. (Turning steering wheel from lock to lock three times causes air bubbles to disappear.) During turning, oil level falls. Add fluid as required to maintain a constant level of oil.
(5) Lower the car to ground with engine running at idle.
(6) Slowly turn steering wheel fully to the left and then to the right to check that no air bubbles appear in fluid, and that change in oil level is within 3 mm (0.12 in).

If oil level changes excessively or oil is whitish (contaminated) and if oil pump emits gear noise, air is not bled completely. Leave car unattended for 30 minutes and start to bleed air again.

6) Lower car to ground.

7) Check fluid leakage.
After completely bleeding air, check pipe couplings for leakage.

a. Do not confuse spilled oil with leakage.
b. Wipe oil off parts before checking for leakage.

8) Check and adjust fluid level.
Oil level is correct if it is between arrow marke on the COLD side of gauge rod when reservoir surface temperature is approximately 20°C (68°F) (engine cold).

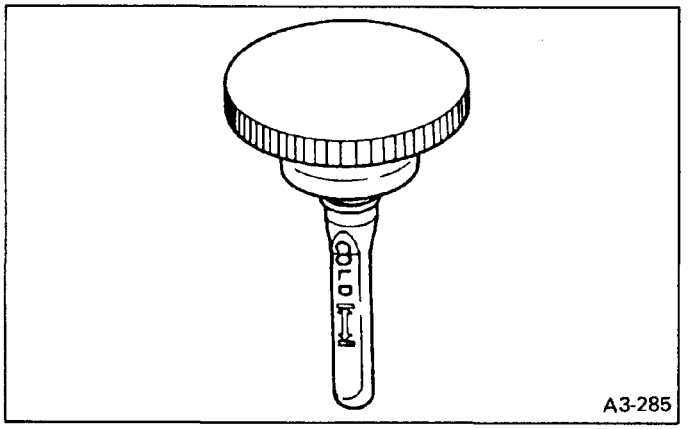

Fig. 222

Remove excess oil using a clean syringe.

TROUBLESHOOTING

Manual Steering

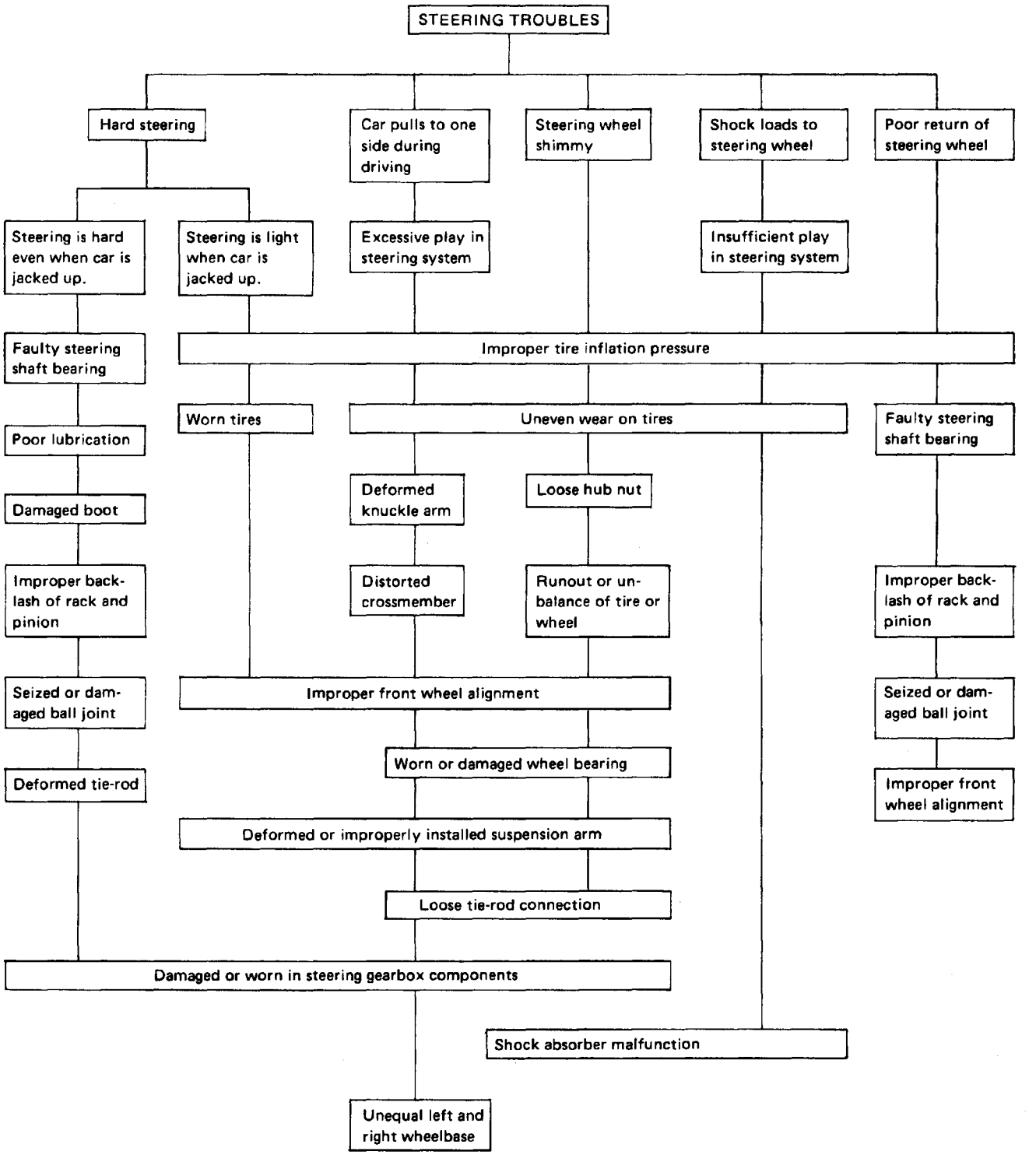

Power Steering

A1) STEERING CONDITION

(1) Except XT6

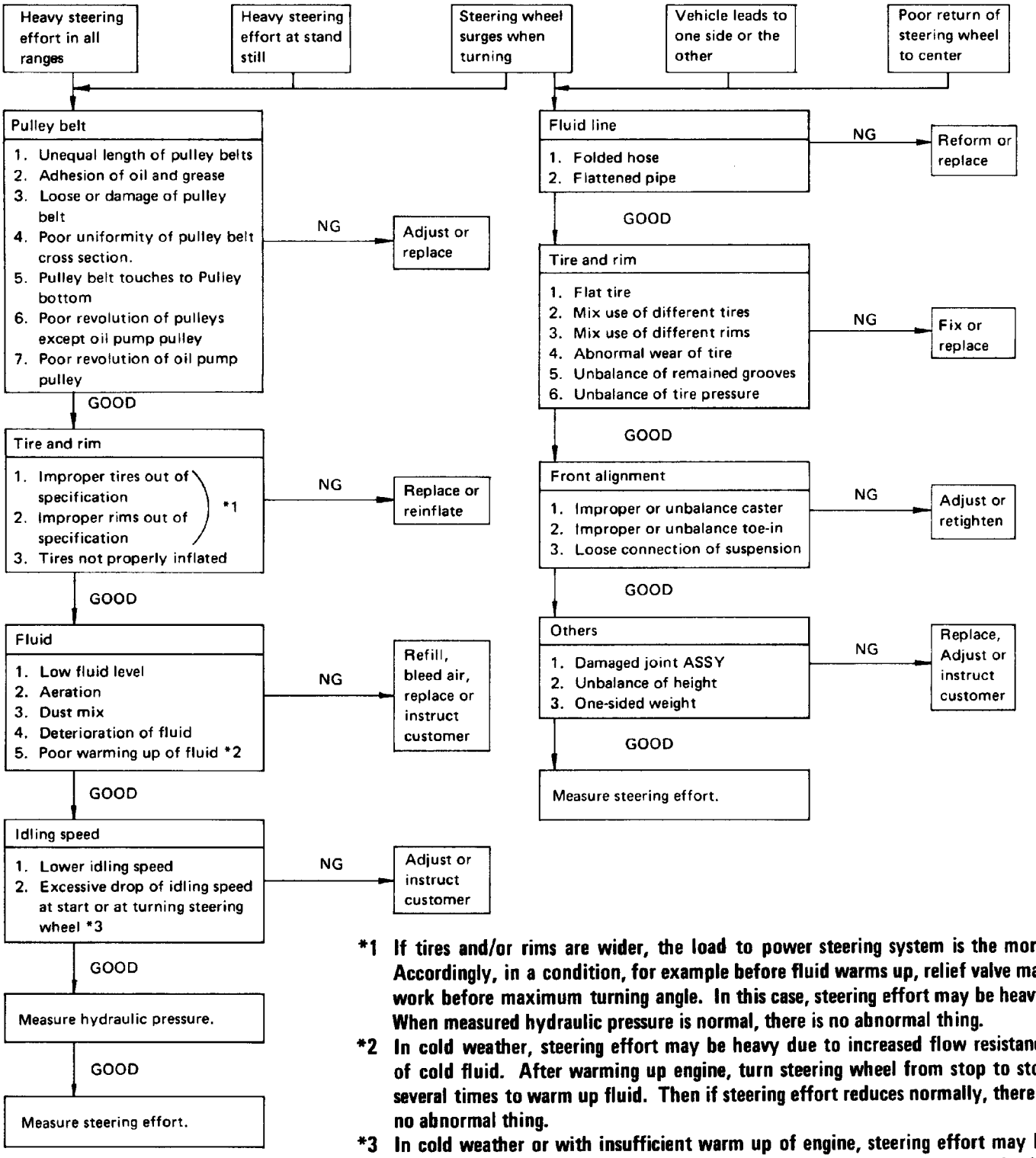

***1 If tires and/or rims are wider, the load to power steering system is the more. Accordingly, in a condition, for example before fluid warms up, relief valve may work before maximum turning angle. In this case, steering effort may be heavy. When measured hydraulic pressure is normal, there is no abnormal thing.**

***2 In cold weather, steering effort may be heavy due to increased flow resistance of cold fluid. After warming up engine, turn steering wheel from stop to stop several times to warm up fluid. Then if steering effort reduces normally, there is no abnormal thing.**

***3 In cold weather or with insufficient warm up of engine, steering effort may be heavy due to excessive drop of idling speed when turning steering wheel. In this case, it is recommended to start the vehicle with increasing engine speed than usual. Then if steering effort reduces normally, there is no abnormal thing.**

(2) XT6

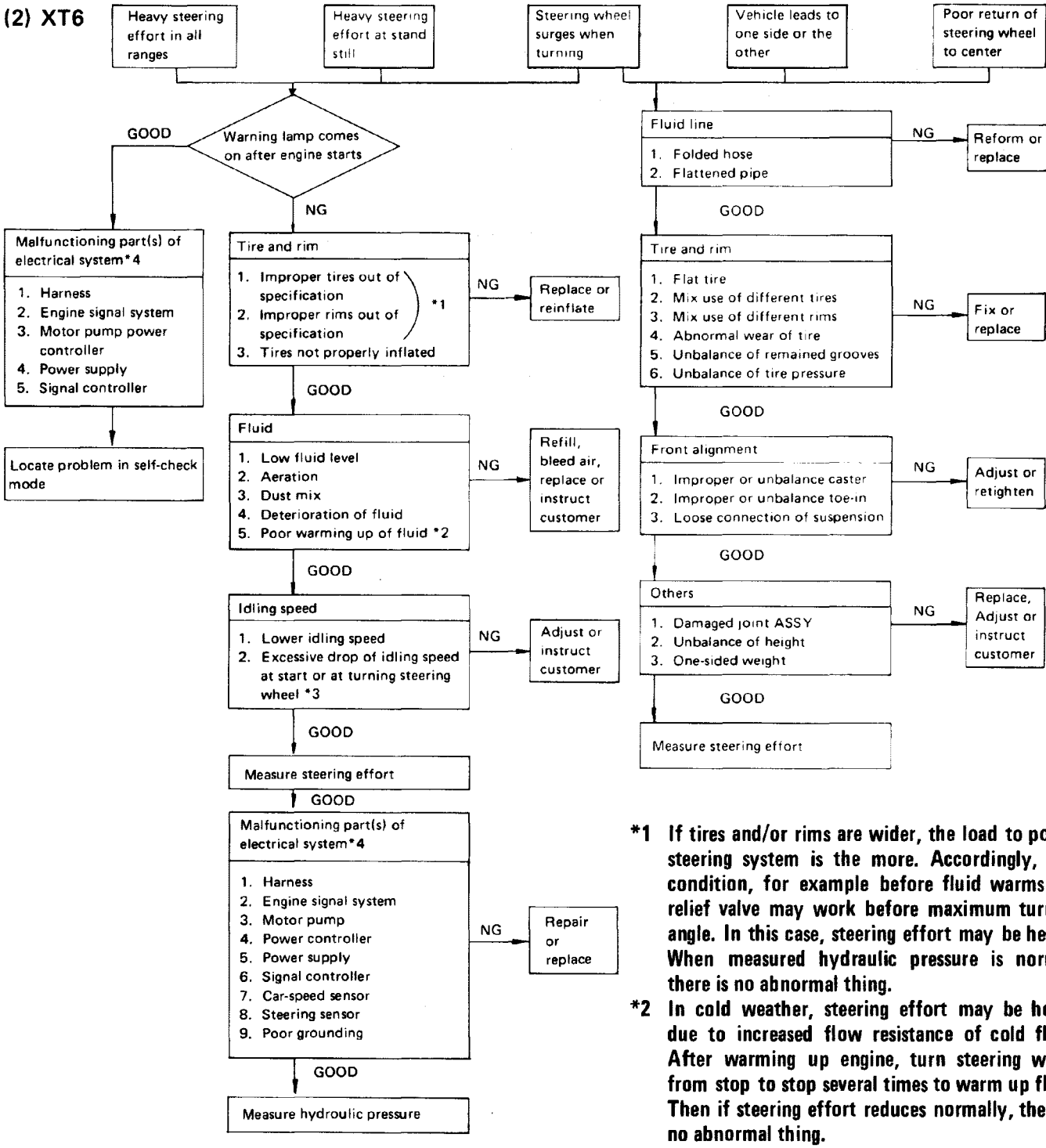

***1 If tires and/or rims are wider, the load to power steering system is the more. Accordingly, in a condition, for example before fluid warms up, relief valve may work before maximum turning angle. In this case, steering effort may be heavy. When measured hydraulic pressure is normal, there is no abnormal thing.**

***2 In cold weather, steering effort may be heavy due to increased flow resistance of cold fluid. After warming up engine, turn steering wheel from stop to stop several times to warm up fluid. Then if steering effort reduces normally, there is no abnormal thing.**

***3 In cold weather or with insufficient warm up of engine, steering effort may be heavy due to excessive drop of idling speed when turning steering wheel. In this case, it is recommended to start the vehicle with increasing engine speed than usual. Then if steering effort reduces normally, there is no abnormal thing.**

***4 Most problems that occur in electrical system can be isolated as to what system line or part is malfunctioning.**

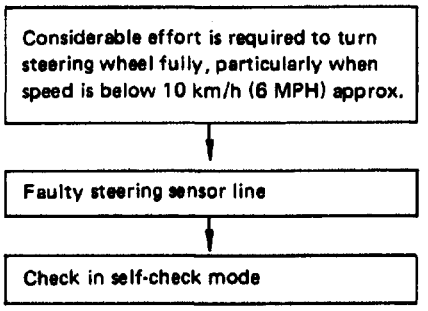
Considerable effort is required to turn steering wheel fully, particularly when speed is below 10 km/h (6 MPH) approx.
Faulty steering sensor line
Check in self-check mode

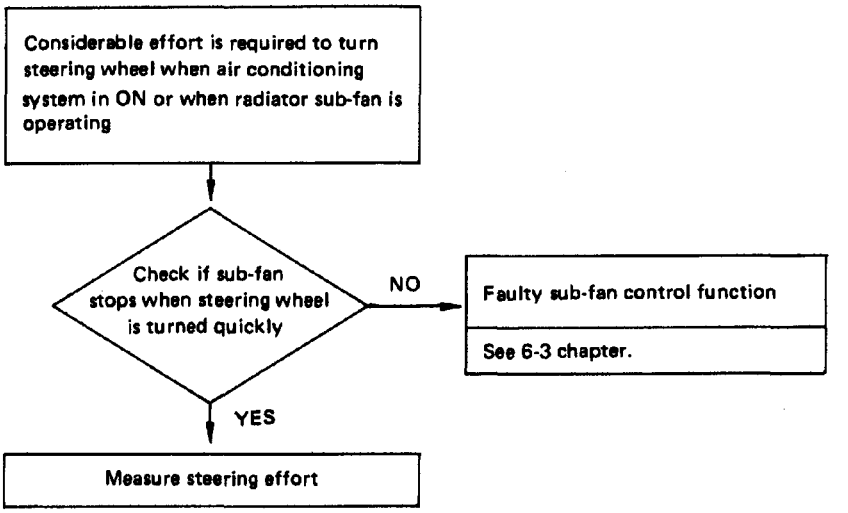
Considerable effort is required to turn steering wheel when air conditioning system in ON or when radiator sub-fan is operating
Check if sub-fan stops when steering wheel is turned quickly
NO
Faulty sub-fan control function
See 6-3 chapter.
YES
Measure steering effort

A2) MEASUREMENT OF STEERING EFFORT

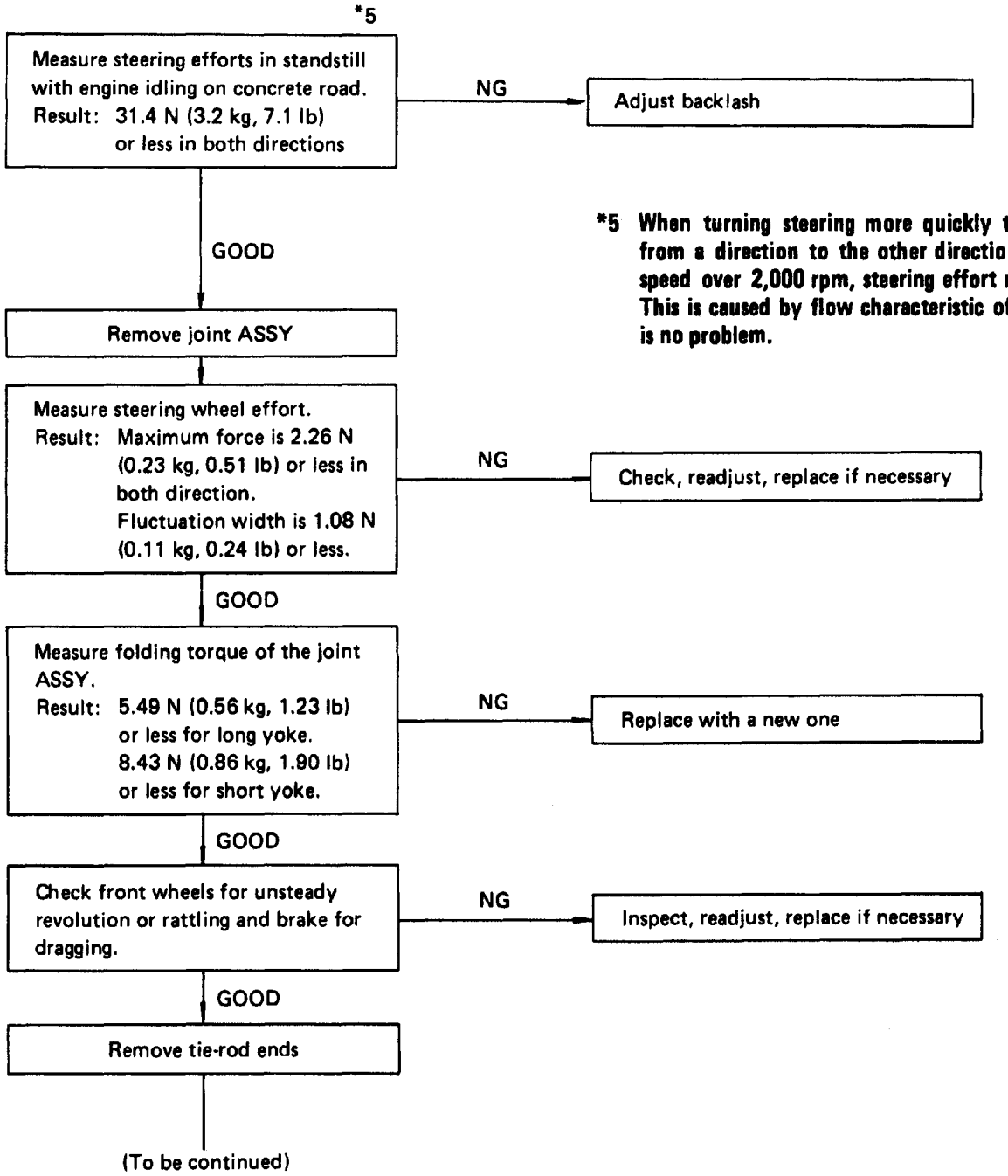

***5 When turning steering more quickly than necessary from a direction to the other direction at an engine speed over 2,000 rpm, steering effort may be heavy. This is caused by flow characteristic of oil pump and is no problem.**

Check tie-rod ends, tie-rods and ball joints of suspension for unsteady revolution or rattling.

NG → Inspect, replace if necessary

GOOD ↓

Measure rotating and sliding resistance of gearbox ASSY.
Result: Rotating resistance is 7.85 N (0.80 kg, 1.76 lb) or less around center position and 10.10 N (1.03 kg, 2.27 lb) or less in all positions within 20% difference between clockwise and counter-clockwise.
Sliding resistance is 245 N (25 kg, 55 lb) or less with 20% difference between left and right directions.

NG → Readjust backlash, if ineffective replace bad parts

Measurement of steering effort

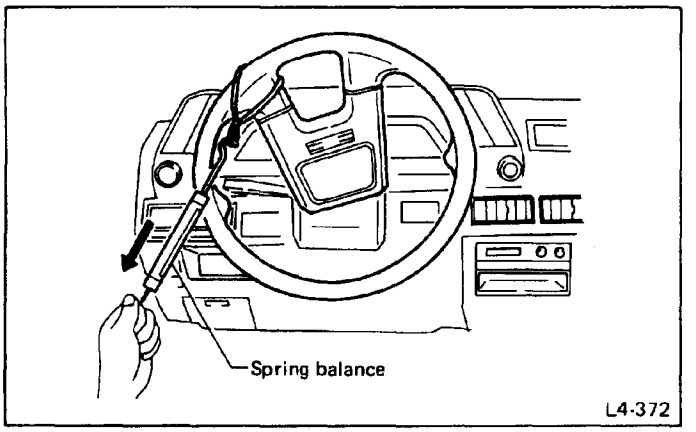

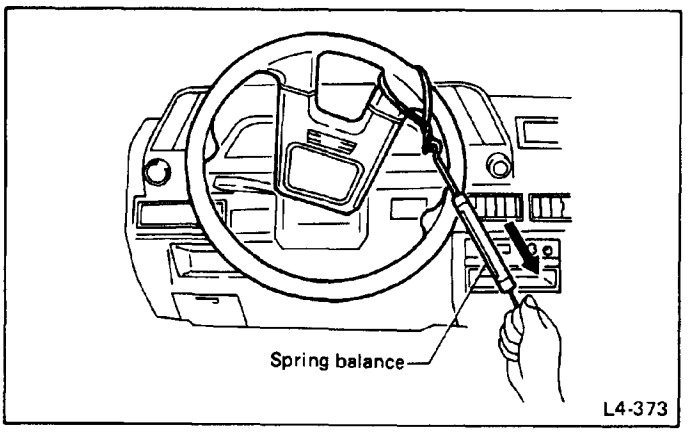

Fig. 223

Measurement of folding torques of joint assembly

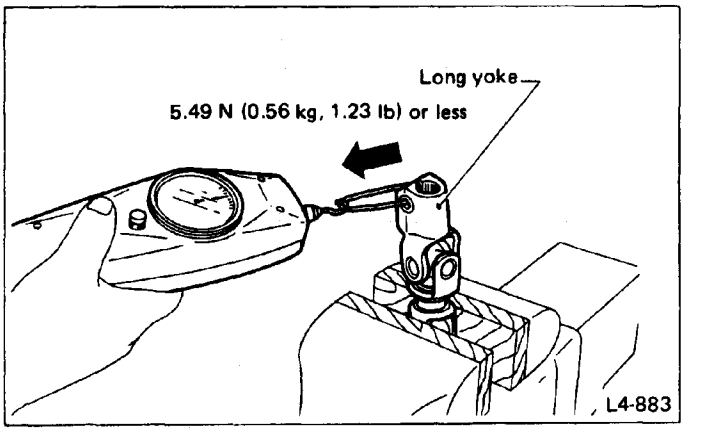

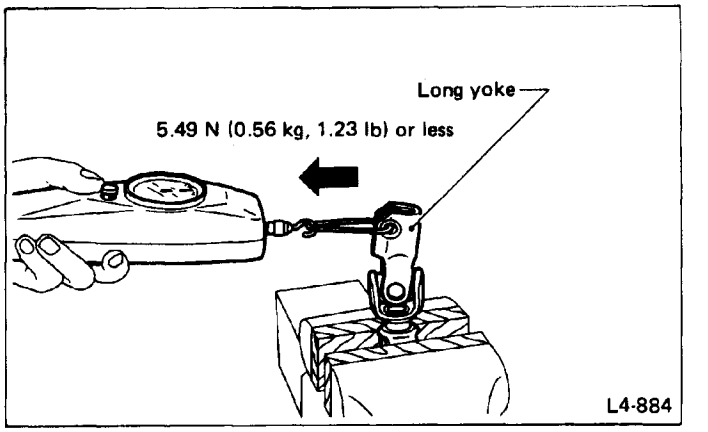

Fig. 224

A3) MEASUREMENT OF HYDRAULIC PRESSURE

Be sure to complete all items aforementioned in article 1), prior to measuring hydraulic pressure. Otherwise, pressure can not be measured correctly.

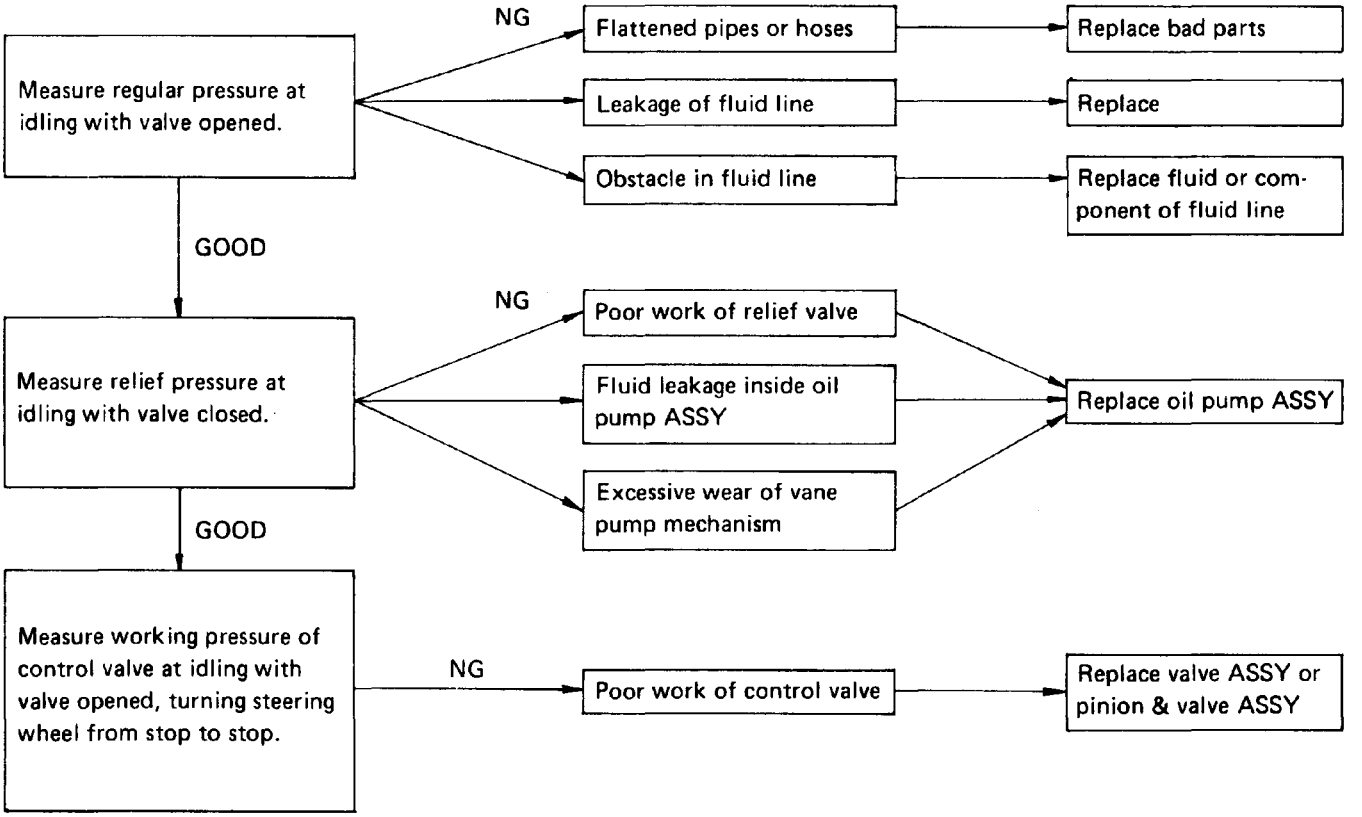

a. Do not leave the valve of pressure gauge closed or hold the steering wheel at stop end for 5 seconds or more in any case, as the oil pump may be damaged due to long keep of these conditions.
b. Put cotton cloth waste at a place where fluid drops before pressure gauge is installed. Wipe off spilt fluid thoroughly after the measurement.
c. Keep engine idling during the measurement.

Regular pressure:
981 kPa (10 kg/cm², 142 psi) or less

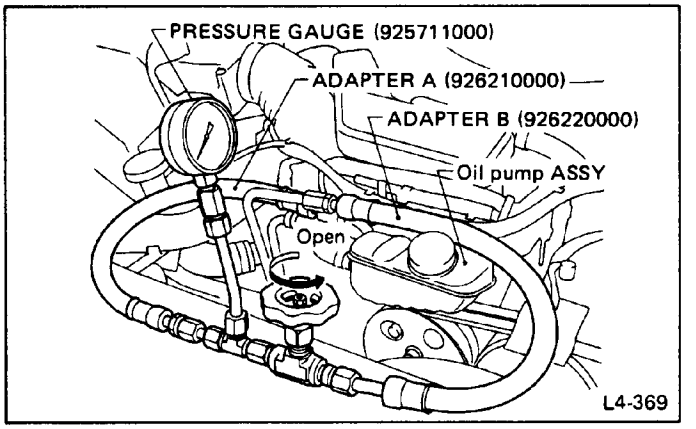

Fig. 225

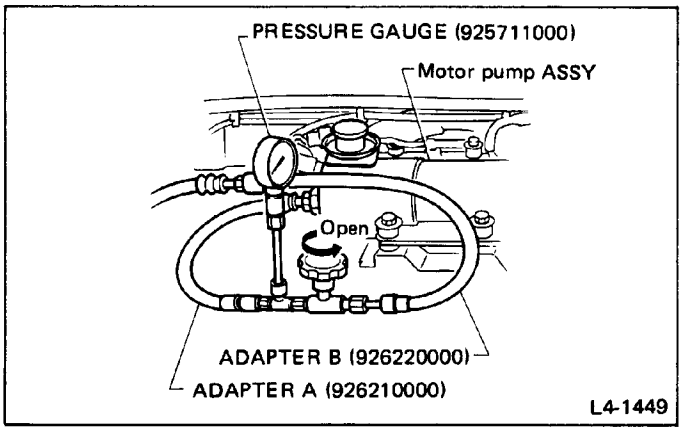

Fig. 226

Relief pressure:
3,923 – 5,394 kPa
(40 – 55 kg/cm², 569 – 782 psi)
5,884 – 7,355 kPa
(60 – 75 kg/cm², 853 – 1,067 psi)

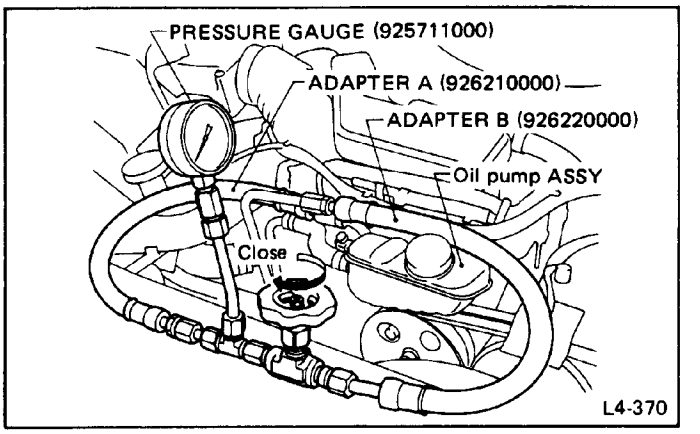

Fig. 227

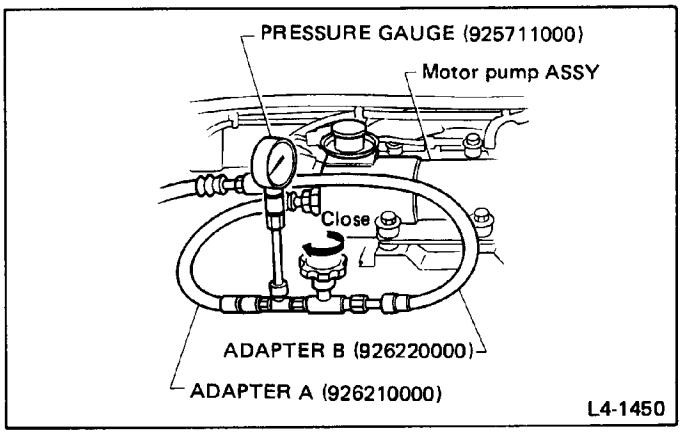

Fig. 228

Working pressure:
5,884 – 7,355 kPa
(60 – 75 kg/cm², 853 – 1,067 psi)

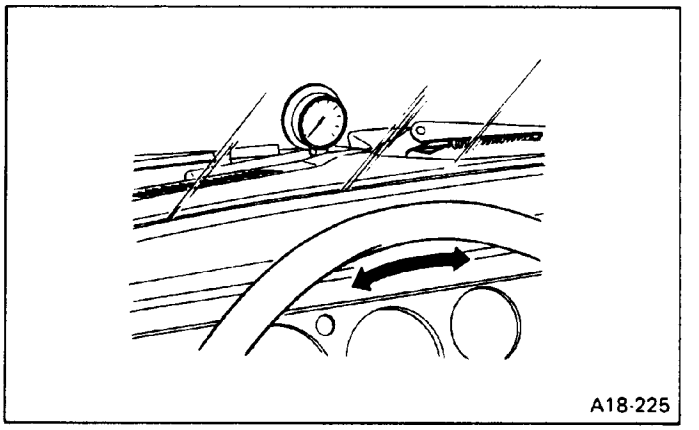

Fig. 229

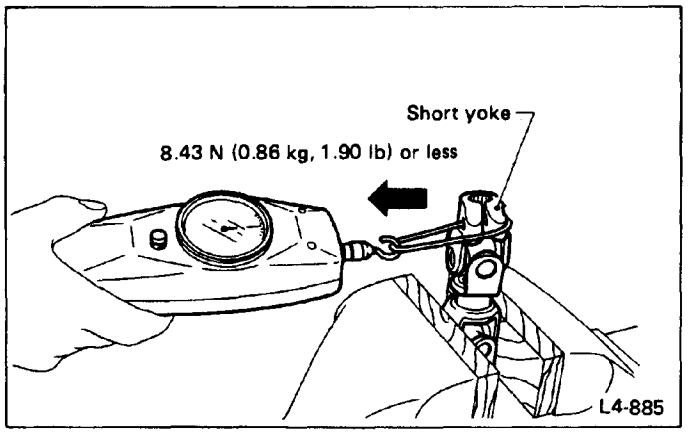

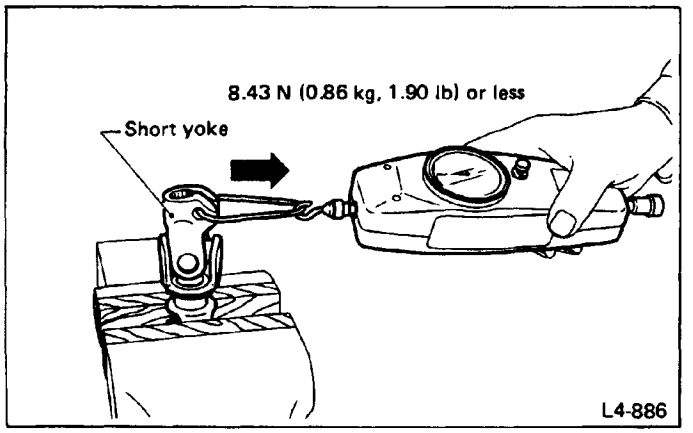

Fig. 230

Measurement of resistances of gearbox assembly

Rotating resistance:
Straight-ahead position within 30 mm (1.18 in) from rack center
Less than 7.85 N (0.80 kg, 1.76 lb)
Maximum allowable torque
10.10 N (1.03 kg, 2.27 lb)

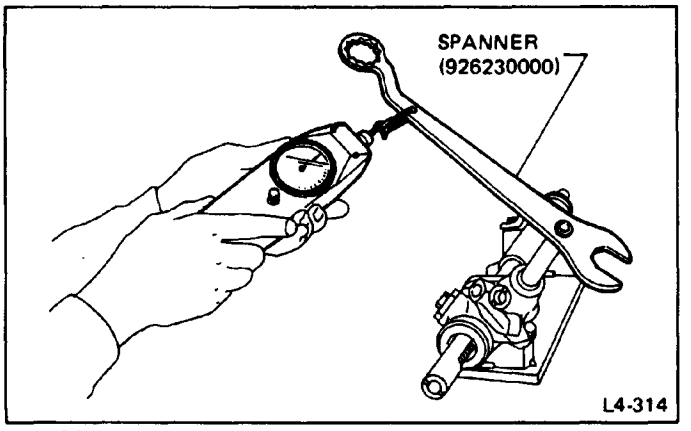

Fig. 231

Sliding resistance:
Right-turn steering
245 N (25 kg, 55 lb) or less
Left-turn steering
245 N (25 kg, 55 lb) or less

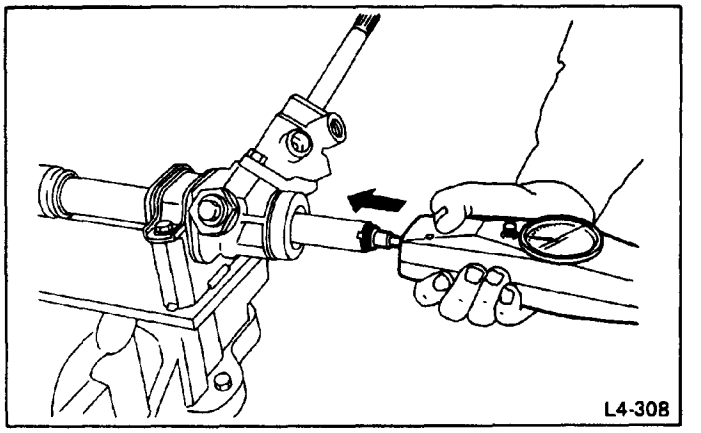

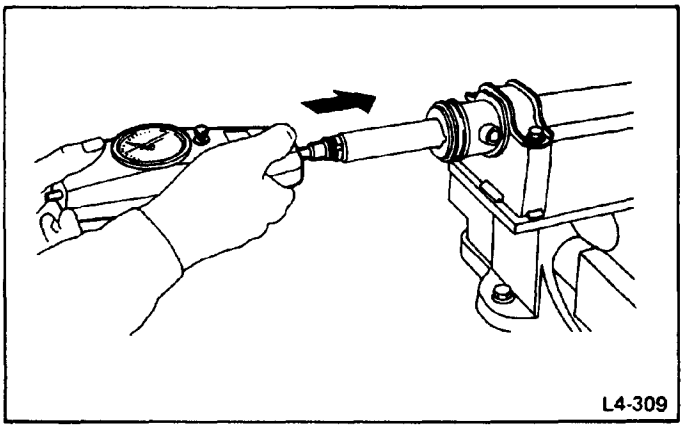

Fig. 232

A4) FLUID LEAKAGE

(1) Except XT6

It is likely that although one judges fluid leakage, there is actually no leakage. This is because the fluid spilt during the last maintenance was not completely wiped off. Be sure to wipe off spilt fluid thoroughly after maintenance.

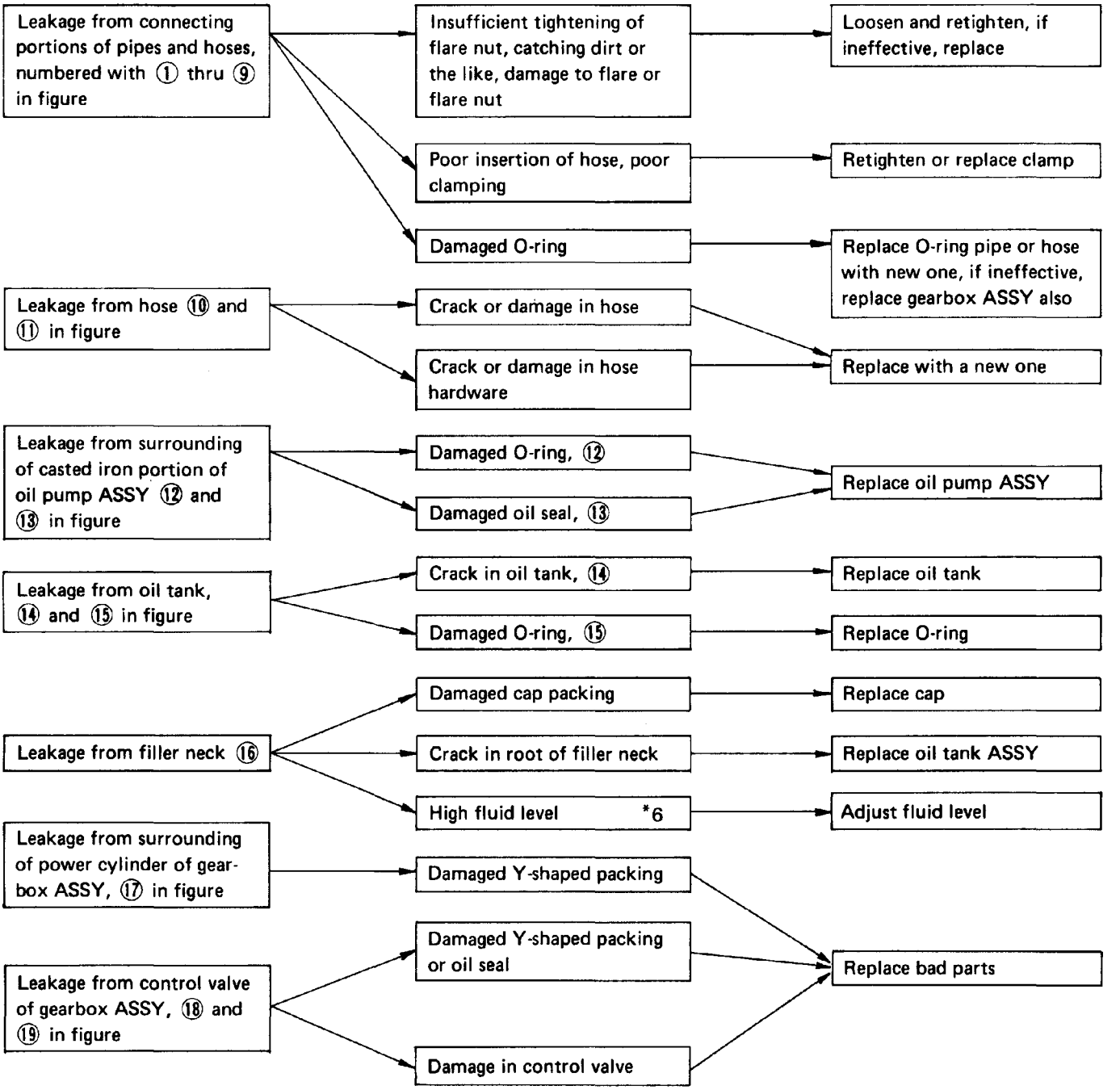

***6 Fluid level is specified at optimum position (range) for ordinary use. Accordingly, if the car is used often under hard conditions such as on very rough roads or in mountainous areas, fluid may bleed out from cap air vent hole. This is not a problem. If a customer complains strongly and is not likely to be satisfied with the leakage, lower the fluid level to the extent that fluid will not bleed out under the conditions described, and have the customer check the fluid level and its quality more frequently than usual.**

(2) XT6

It is likely that although one judges fluid leakage, there is actually no leakage. This is because the fluid spilt during the last maintenance was not completely wiped off. Be sure to wipe off spilt fluid thoroughly after maintenance.

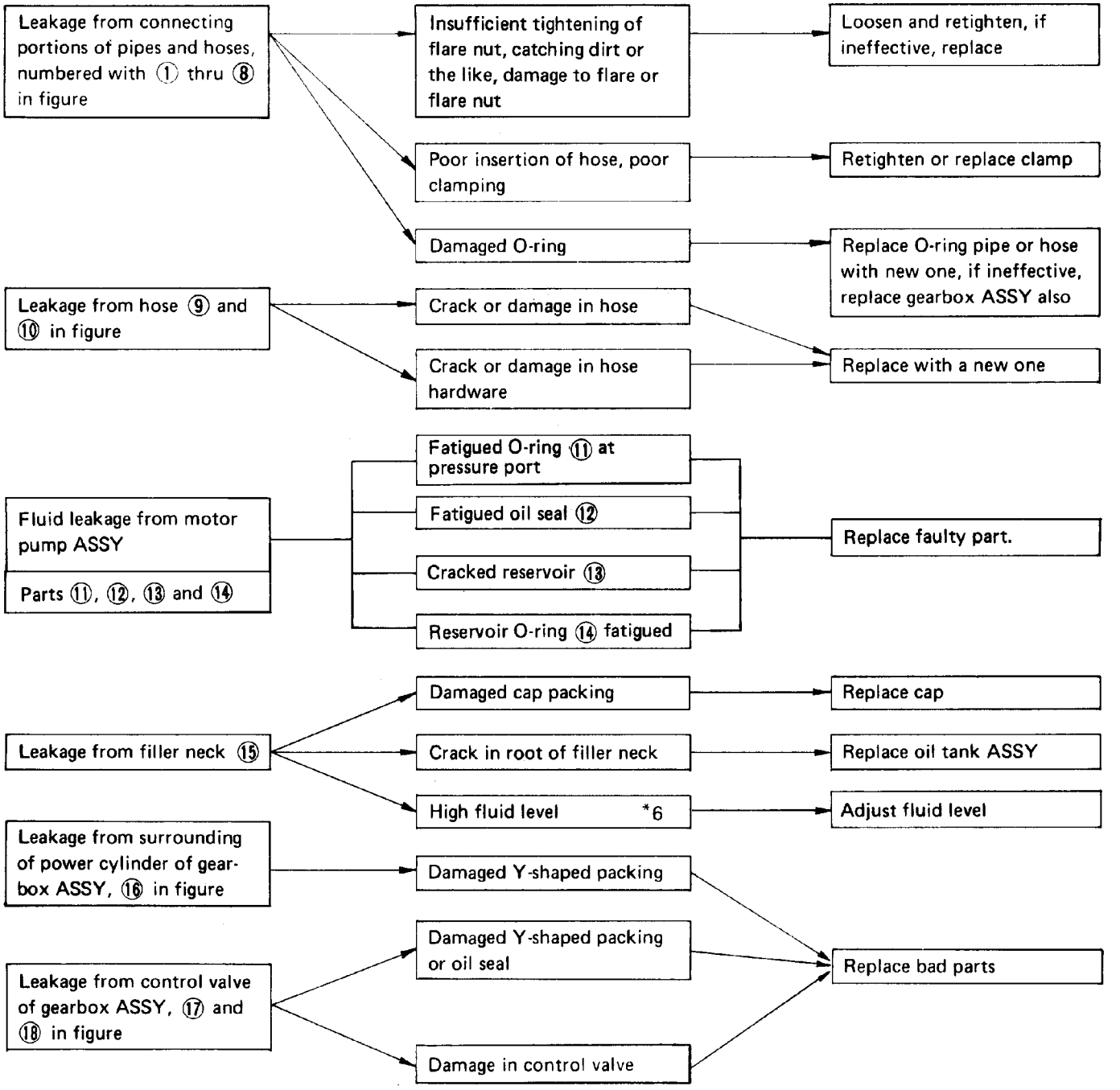

***6 Fluid level is specified at optimum position (range) for ordinary use. Accordingly, if the car is used often under hard conditions such as on very rough roads or in mountainous areas, fluid may bleed out from cap air vent hole. This is not a problem. If a customer complains strongly and is not likely to be satisfied with the leakage, lower the fluid level to the extent that fluid will not bleed out under the conditions described, and have the customer check the fluid level and its quality more frequently than usual.**

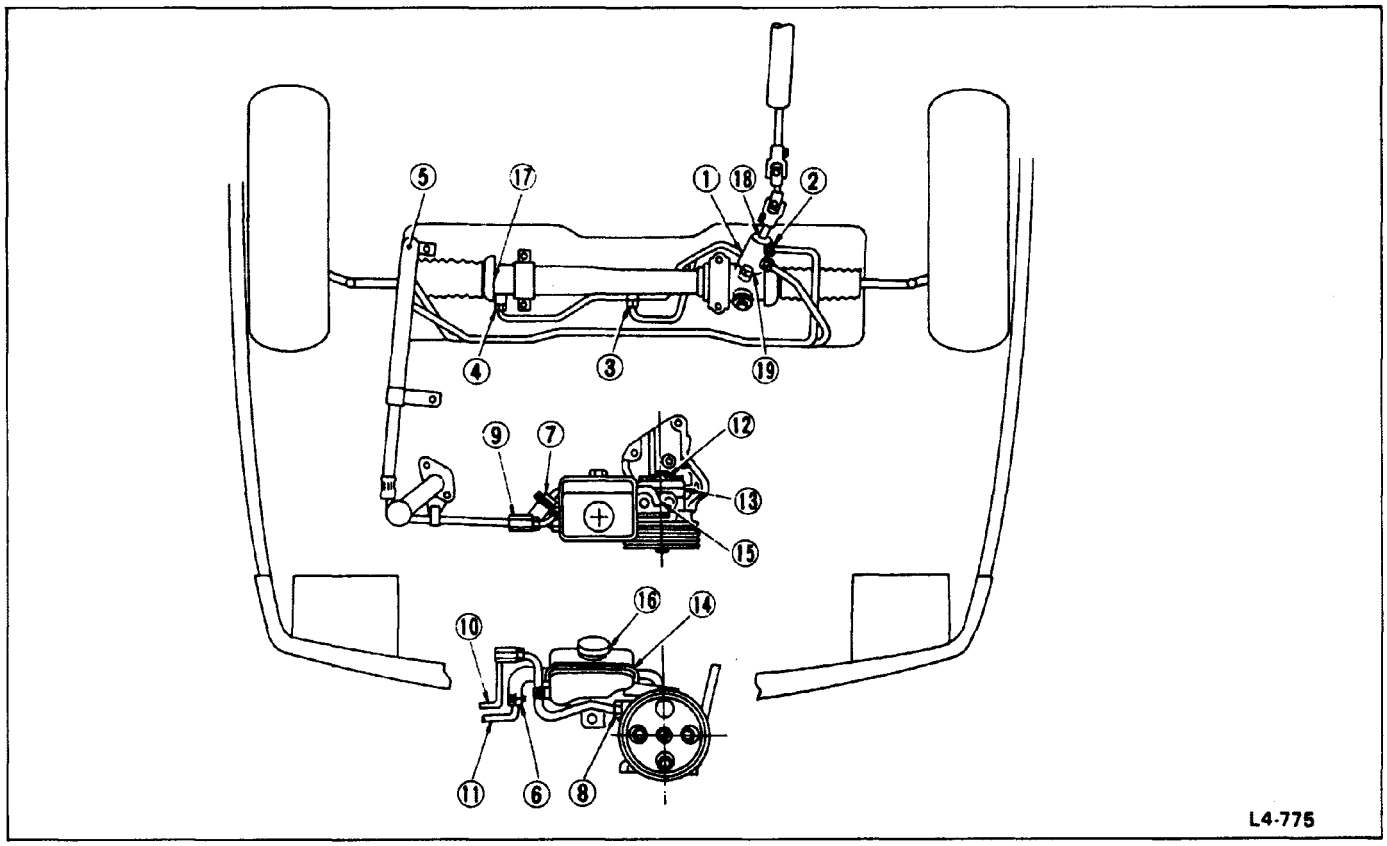

Fig. 233

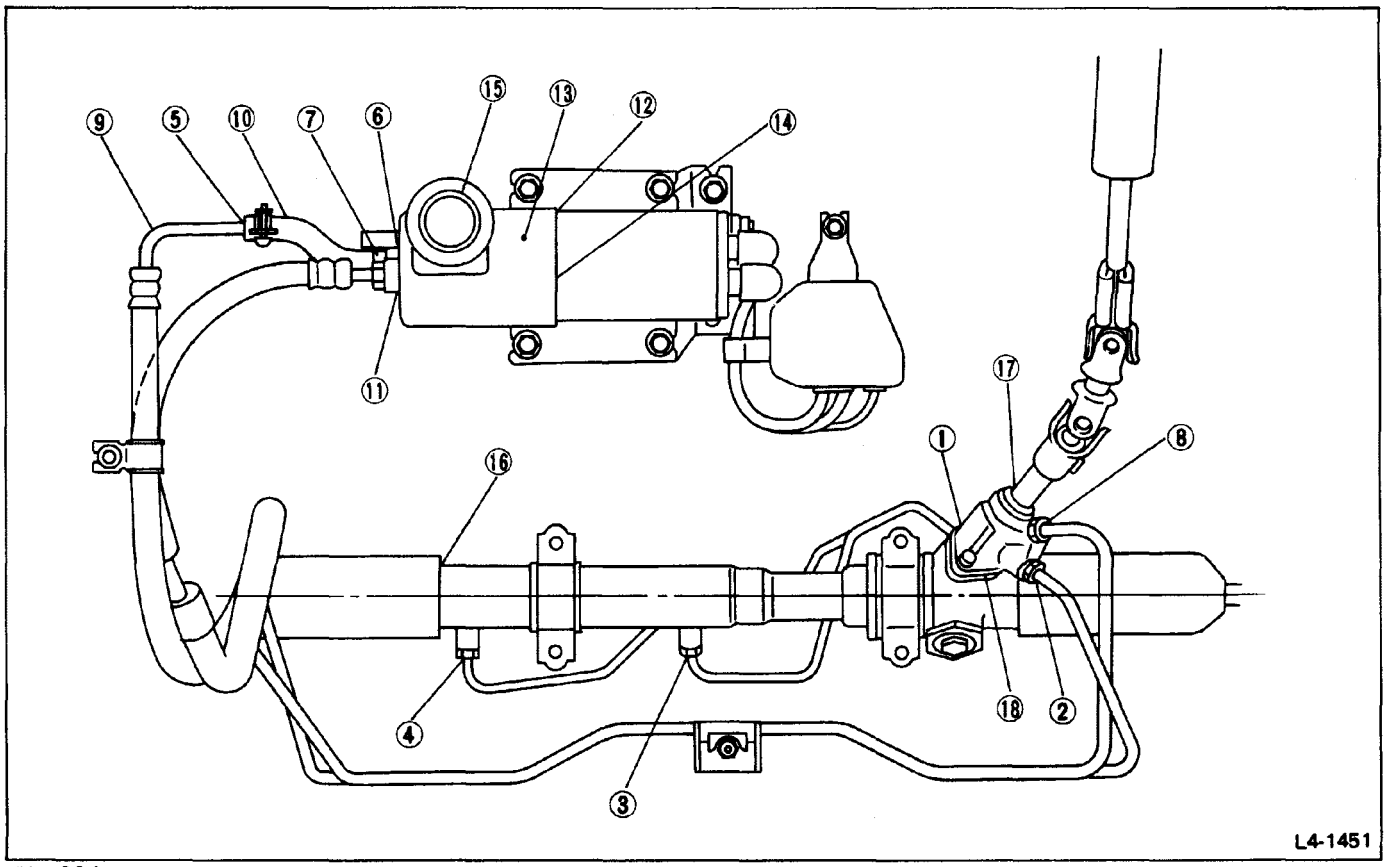

Fig. 234

A5) NOISE AND VIBRATION

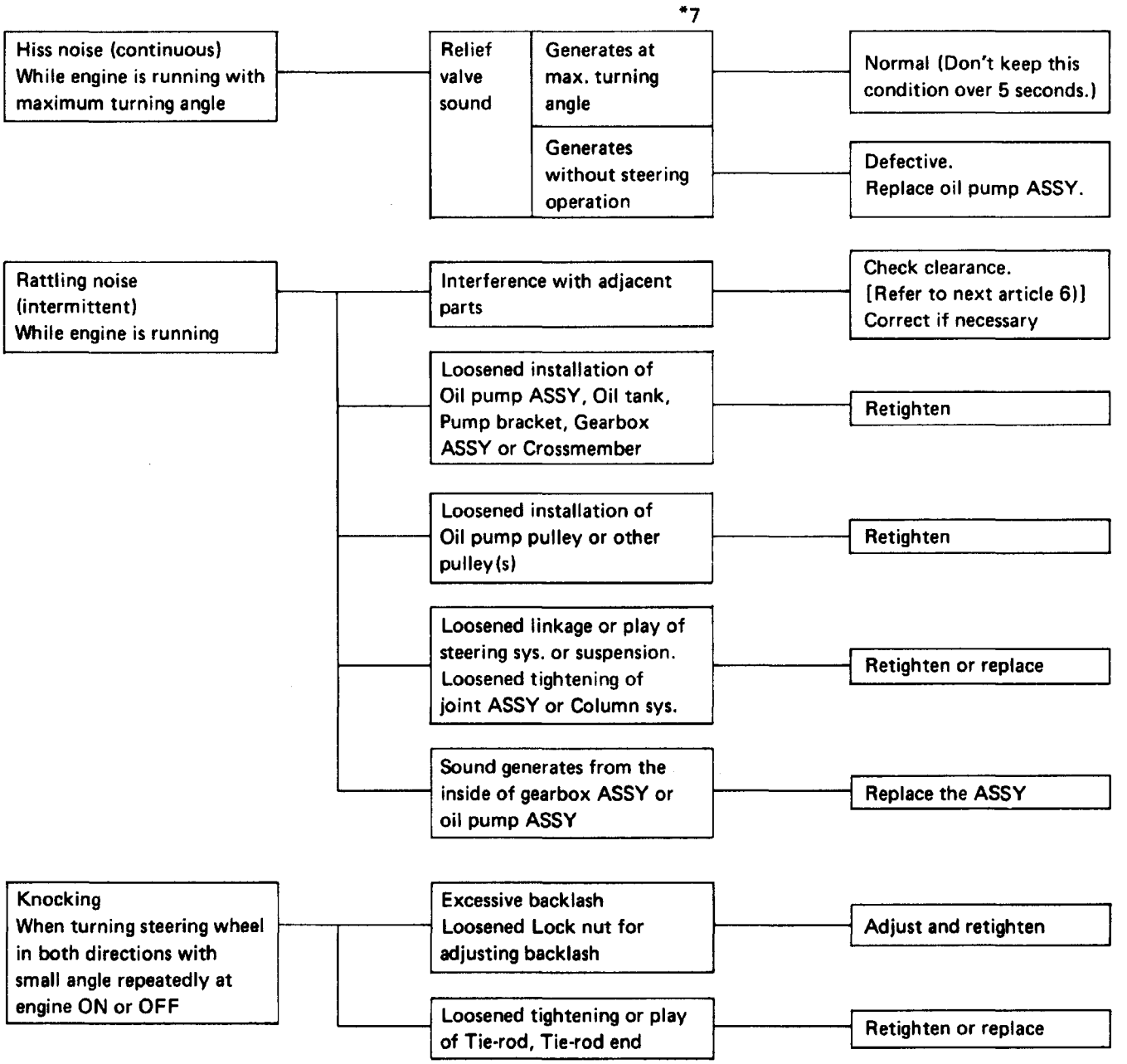

***7 Don't keep the relief valve operated over 5 sec. at any time or inner parts of the oil pump may be damaged due to rapid increase of fluid temperature.**

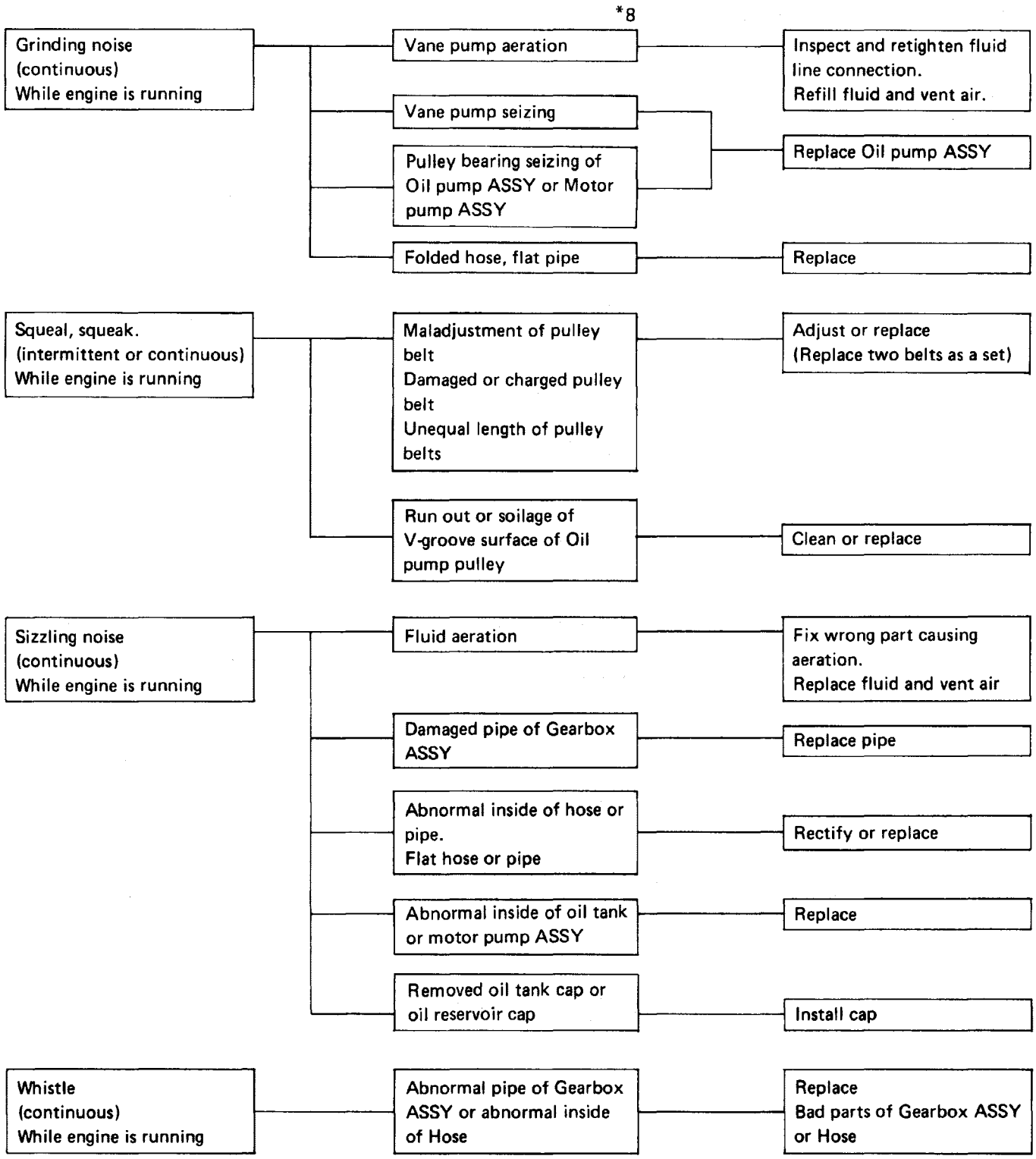

***8 Grinding noise may be heard immediately after the engine start in extremely cold condition. In this case, if the noise goes off during warm up there is no abnormal function in the system. This is due to the fluid characteristic in extremely cold condition.**

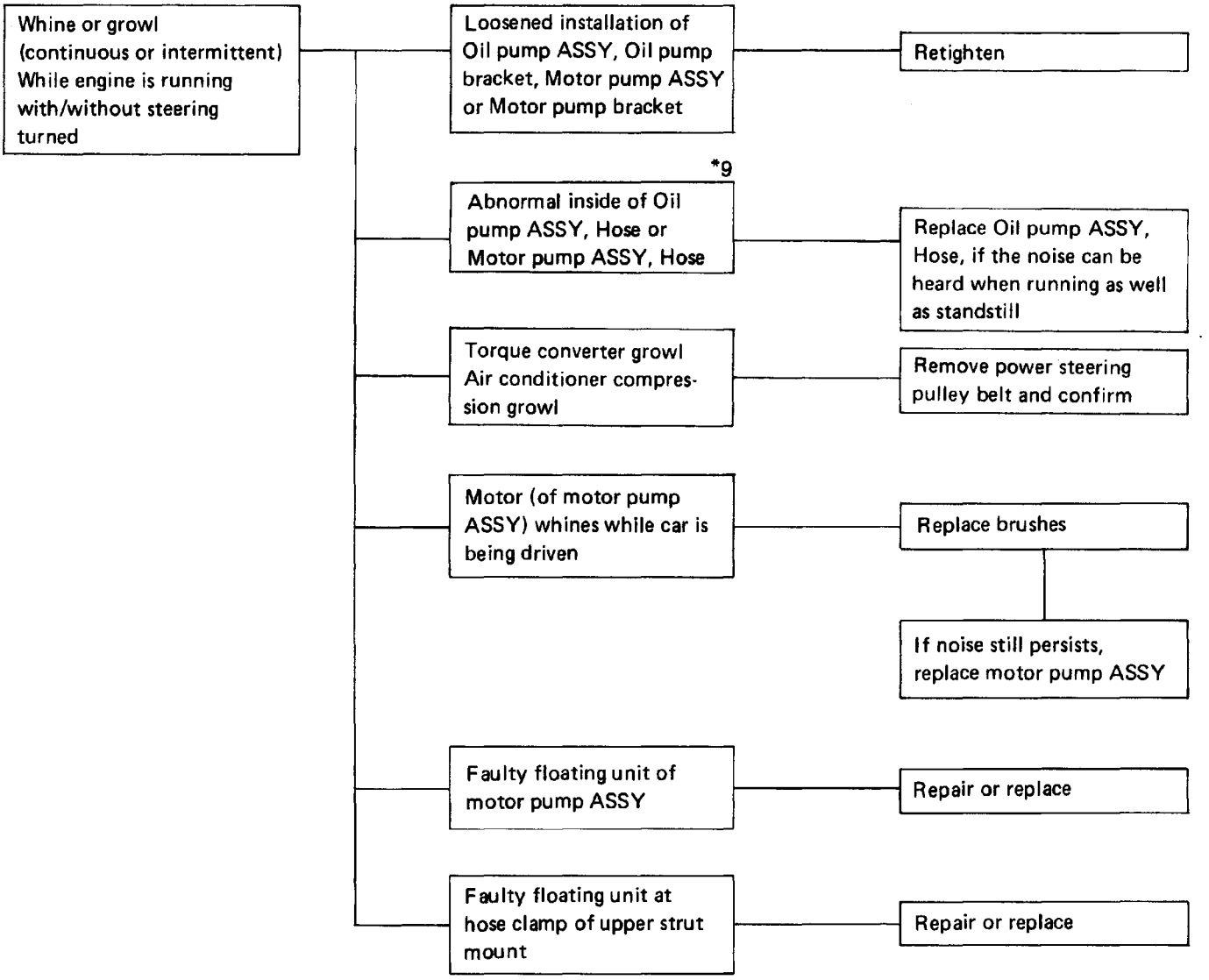
Whine or growl (continuous or intermittent) While engine is running with/without steering turned
Loosened installation of Oil pump ASSY, Oil pump bracket, Motor pump ASSY or Motor pump bracket
Retighten
*9
Abnormal inside of Oil pump ASSY, Hose or Motor pump ASSY, Hose
Replace Oil pump ASSY, Hose, if the noise can be heard when running as well as standstill
Torque converter growl Air conditioner compression growl
Remove power steering pulley belt and confirm
Motor (of motor pump ASSY) whines while car is being driven
Replace brushes
If noise still persists, replace motor pump ASSY
Faulty floating unit of motor pump ASSY
Repair or replace
Faulty floating unit at hose clamp of upper strut mount
Repair or replace

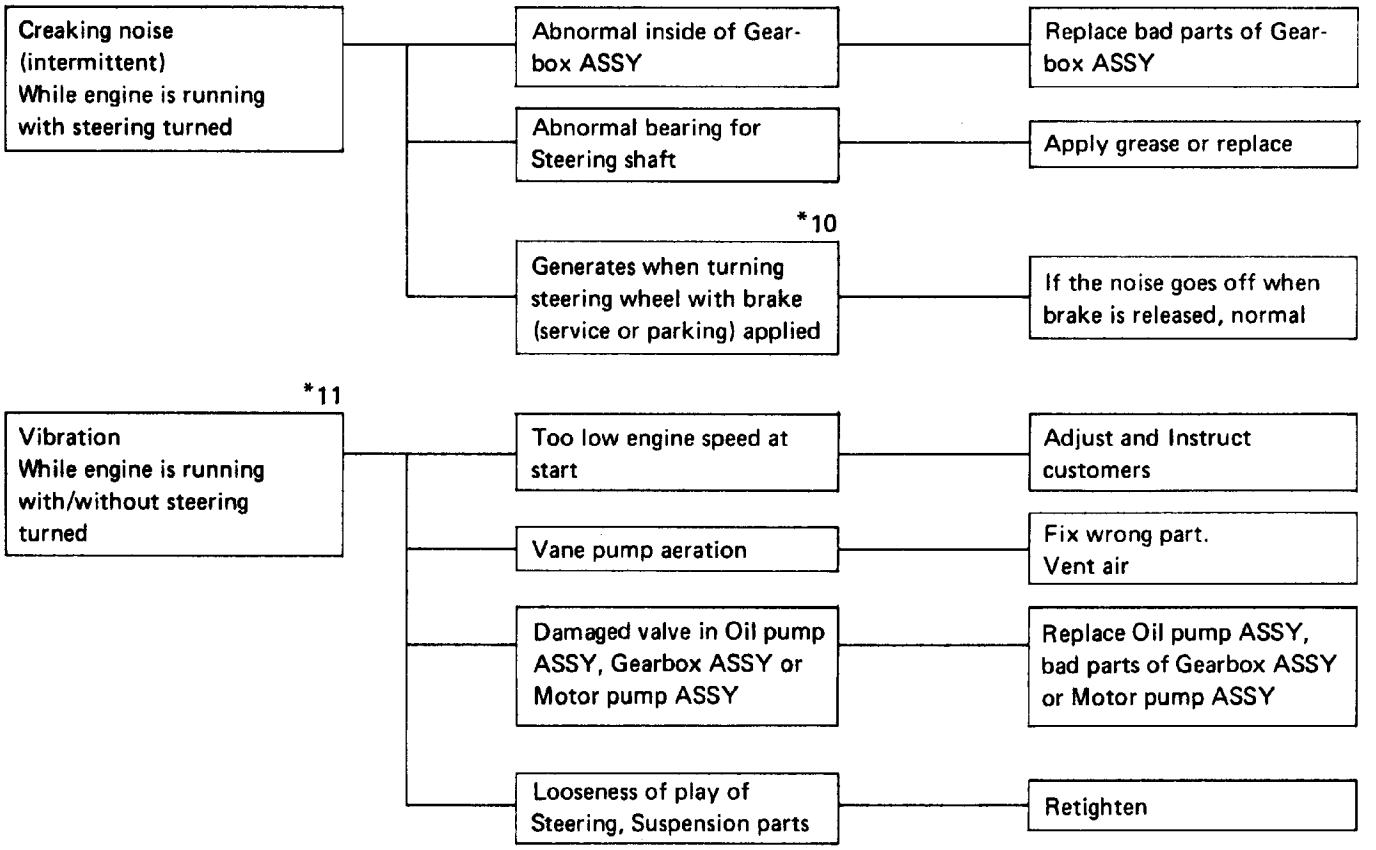

***9 Oil pump or Motor pump makes whine or growl noise slightly due to its mechanism. Even if the noise can be heard when steering wheel is turned at standstill there is no abnormal function in the system provided that the noise eliminates when the car is running.**

***10 When stopping with service brake and/or parking brake applied, power steering can be operated easily due to its light steering effort. If doing so, the disk rotates slightly and makes creaking noise. The noise is generated by creaking between the disk and pads. If the noise goes off when the brake is released, there is no abnormal function in the system.**

***11 There may be a little vibration around the steering devices when turning steering wheel at standstill, even though the component parts are properly adjusted and have no defects.**
Hydraulic systems are likely to generate this kind of vibration as well as working noise and fluid noise because of combined conditions, i.e.,
Road surface and tire surface, Engine speed and turning speed of steering wheel, Fluid temperature and braking condition.
This phenomena does not indicate there is some abnormal function in the system.
The vibration can be known when steering wheel is turned repeatedly at various speeds from slow to rapid step by step with parking brake applied on concrete road and in "D" range for automatic transmission vehicle.

A6) CLEARANCE TABLE

This table lists various clearances that must be correctly adjusted to ensure normal vehicle driving without interfering noise or any other faults.

(1) Except XT6

Location	Minimum allowance mm (in)	Location	Minimum allowance mm (in)
① High tension cord – Oil tank	5 (0.20)	⑦ Exhaust pipe – Gearbox boot	15 (0.59)
② DOJ – Shaft or Joint ASSY	14 (0.55)	⑧ Side frame – Hoses A and B	15 (0.59)
③ DOJ – Valve housing	11 (0.43)	⑨ TURBO lubricating pipe – Hoses A and B	8 (0.31)
④ Pipe – Pipe	2 (0.08)	⑩ Radiator hose – Hoses A and B	13 (0.51)
Pipe – Crossmember		⑪ Oil pan – Pipe	10 (0.39)
⑤ Stabilizer – Pipe	5 (0.20)	⑫ Thermostat – Hoses A and B	2 (0.08)
⑥ Exhaust pipe – Pipe	15 (0.59)	⑬ AT cooling hose – Joint ASSY	20 (0.79)

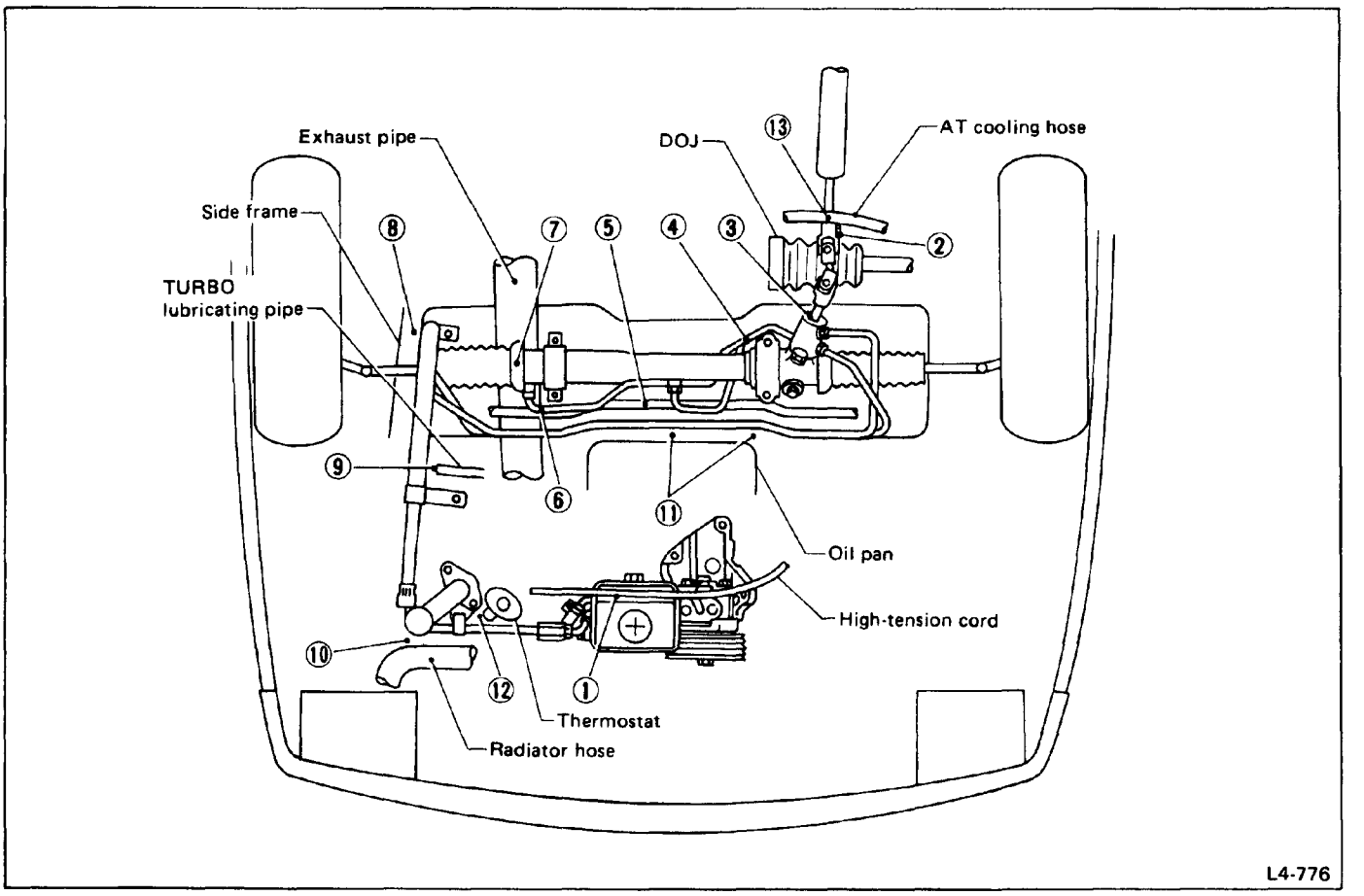

Fig. 235

(2) XT6

Location	Minimum allowance mm (in)	Location	Minimum allowance mm (in)
① Motor pump to bracket	3 (0.12)	⑦ Exhaust pipe to gear box boot	14 (0.55)
② DOJ joint to shaft/joint ASSY	14 (0.55)	⑧ Power cylinder to starter ring gear	12 (0.47)
③ DOJ to valve housing	14 (0.55)	⑨ Brake booster to pipe	5 (0.20)
④ Pipe to pipe/crossmember	2 (0.08)	⑩ Engine intake duct to hoses A and B	10 (0.39)
⑤ Stabilizer to pipe	5 (0.20)	⑪ Brake master cylinder to hoses A and B	10 (0.39)
⑥ Exhaust pipe to pipe	15 (0.59)	⑫ Accelerator cable to power controller	5 (0.20)

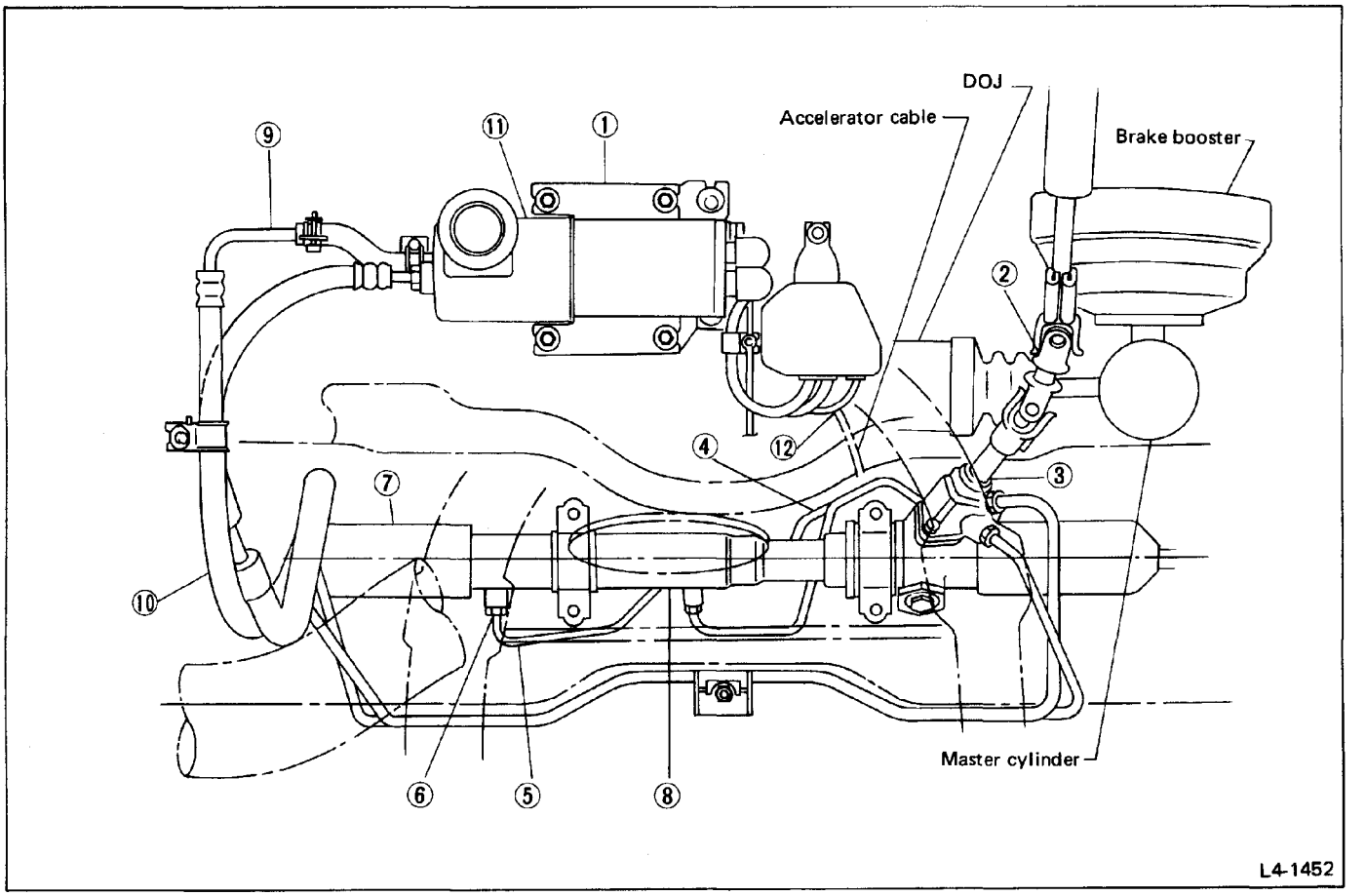

Fig. 236

A7) BREAKAGE OF HOSES

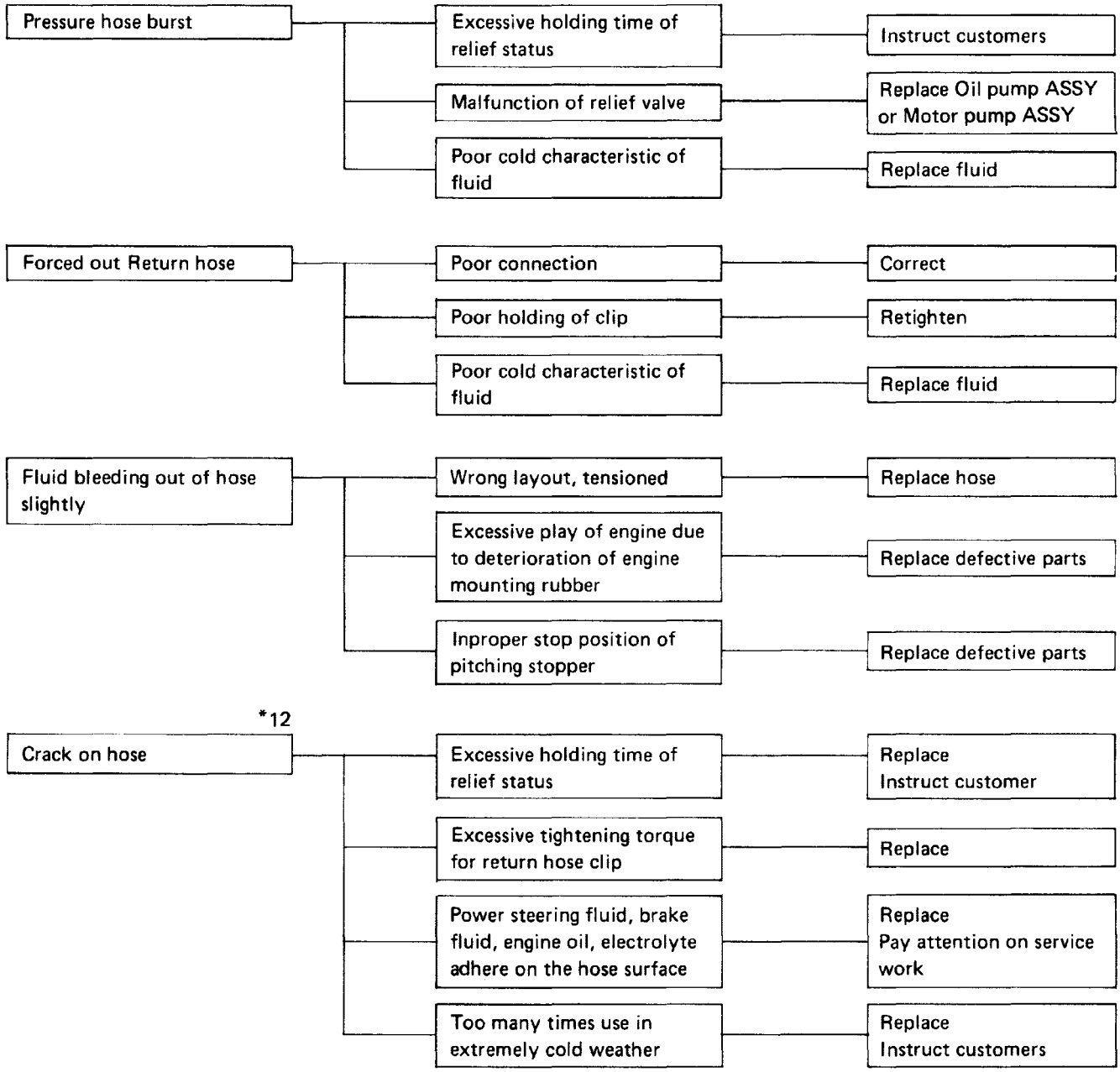

***12 Although surface layer materials of rubber hoses have excellent weathering resistance, heat resistance and resistance for low temperature brittleness, they are likely to be damaged chemically by brake fluid, battery electrolyte, engine oil and automatic transmission fluid and their service lives are to be very shortened. It is very important to keep the hoses free from before-mentioned fluids and to wipe out immediately when the hoses are adhered with the fluids.**
Since resistances for heat or low temperature brittleness are gradually declining according to time accumulation of hot or cold conditions for the hoses and their service lives are shortening accordingly, it is necessary to perform careful inspection frequently when the car is used in hot weather areas, cold weather areas and/or a driving condition in which many times steerings are required in short time. Particularly continuous work of relief valve over 5 seconds causes to reduce service lives of the hoses, the oil pump ASSY, the fluid, etc. due to over heat.
So, avoid to keep this kind of condition when servicing as well as driving.

SUBARU

1988

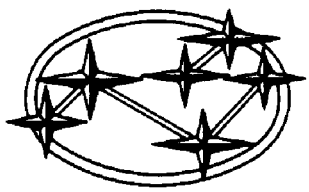

Page

MECHANISM AND FUNCTION 2
Disc Brake 2
Master Cylinder 2
Brake Booster 5
Proportioning Valve 5
Hill-Holder 7
SPECIFICATIONS AND SERVICE DATA 10
SPECIFICATIONS 10
SERVICE DATA 11
RECOMMENDED BRAKE FLUID 11
COMPONENT PARTS 12
SERVICE PROCEDURE 20
Front Disc Brake 20
Rear Disc Brake 30
Rear Drum Brake 33
Master Cylinder 36
Brake Booster 37
Brake Hose 40
Proportioning Valve 41
Hill-Holder 42
Parking (Hand) Brake 44
Brake Fluid Level Indicator 45
Air Bleeding 45
Replacement of Brake Fluid 46
TROUBLESHOOTING 48
Entire Brake System 48
Hill-Holder 50

MECHANISM AND FUNCTION

Disc Brake

PAD WEAR INDICATOR

A wear indicator is provided on disc brake pad. If the front pad wears down to 1.5 mm (0.059 in) or the rear pad wears down to 3 mm (0.12 in), the tip of the wear indicator comes into contact with the disc rotor, and it makes a squeaking sound as the wheel rotates, indicating that the pad needs to be replaced. (XT6)

If the pad wears down to 1.5 mm (0.059 in), the tip of the wear indicator comes into contact with the disc rotor, and it makes a squeaking sound as the wheel rotates, indicating that the pad needs to be replaced. (Except XT6)

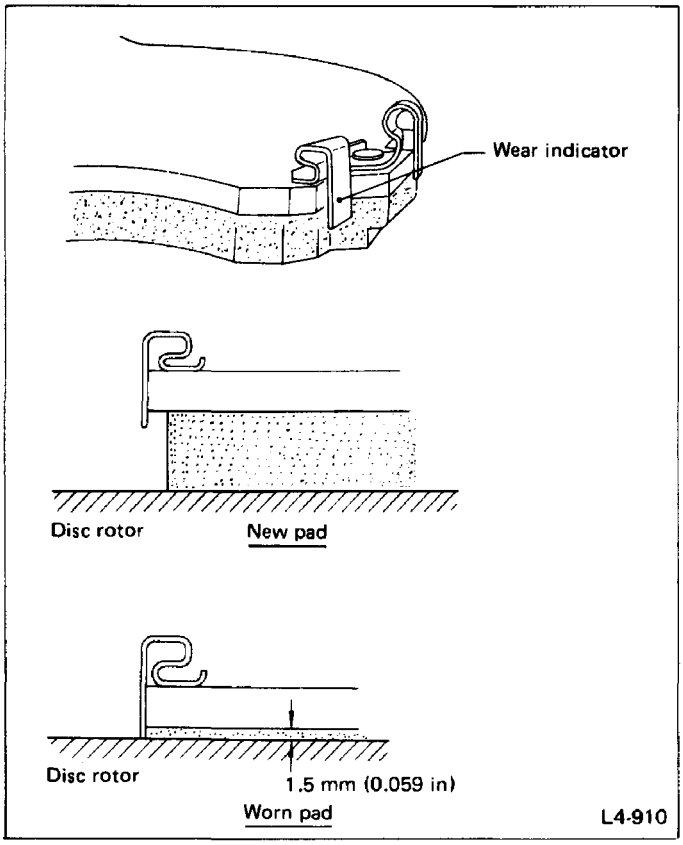

Fig. 1 Front disc brake

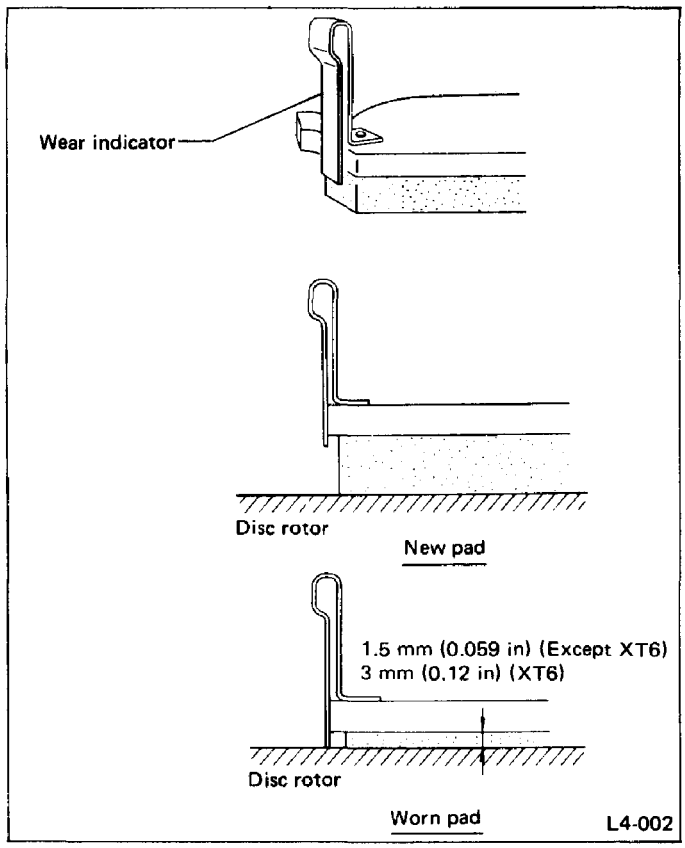

Fig. 2 Rear disc brake

Master Cylinder (Except XT6)

1) The fast-fill mechanism is adopted to improve the pedal operating feel.

2) The sealed reservoir tank is adopted to extend the service life of brake fluid.

3) The fluid leveler is built into the reservoir tank for easy and correct monitoring of the fluid level when adding brake fluid.

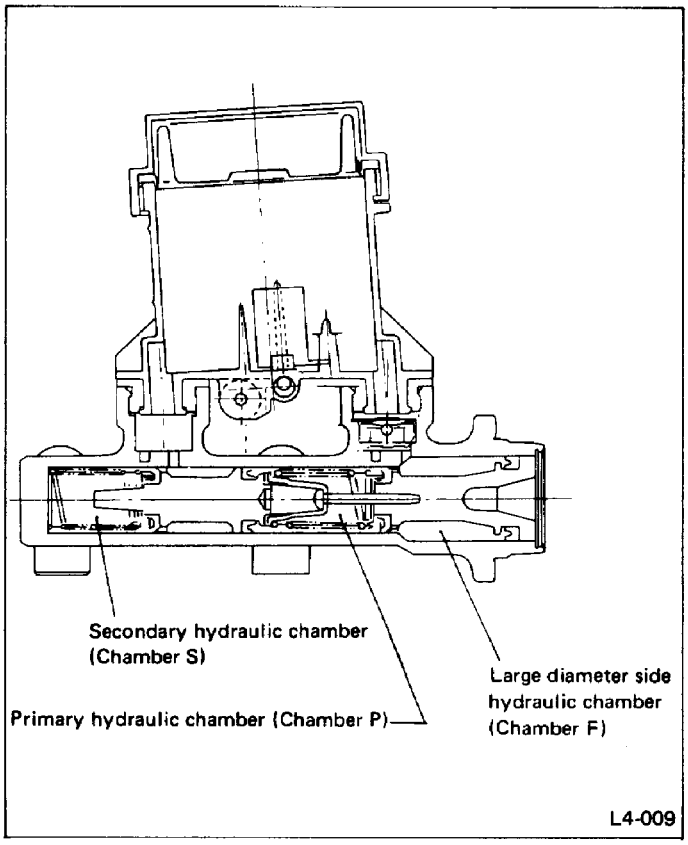

Fig. 3

OPERATION OF FAST-FILL MECHANISM

When compared to a conventional master cylinder, the one with the fast-fill mechanism has the following two unique structural features:

1) It has a large diameter chamber (chamber F) on the inlet side of the master cylinder, and small diameter chambers (chambers P and S) on the inner side. The primary piston is of a stepped construction with those two diameters.

2) A check valve, which is called the fast-fill valve (FFV), is installed between chambers P & F and the reservoir.

This FFV controls the flow of brake fluid from chamber F to reservoir, and vice versa, by ball valve and supply valve, respectively.

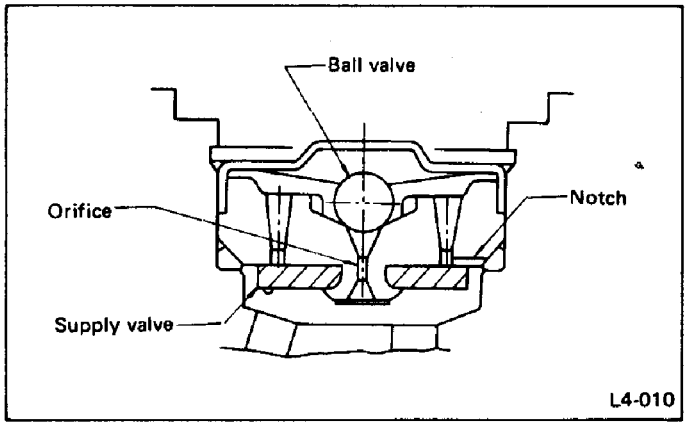

Fig. 4

The ball valve is opened when fluid pressure in chamber F exceeds the preset pressure level. The notch in the supply valve keeps the valve always in a partially opened state, so that no fluid pressure will be left in chambers P and F when the system is not operating.

Operation of fast-fill valve

1) Low fluid pressure period

During the low fluid pressure period which begins immediately after starting the piston and ends when the ball valve in the FFV releases, the fluid pressure generated in chamber F is higher than the one in chamber P; the fluid pressure difference causes fluid to flow from chamber F to chamber P. The amount of fluid flow shortens the brake pedal stroke, i.e. brake fluid is pushed out of the master cylinder through the sectional area of chamber F.

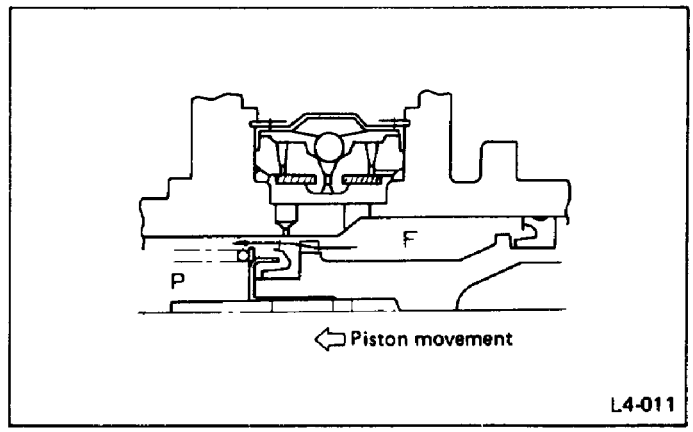

Fig. 5

2) High fluid pressure period

During the high fluid pressure period after releasing fluid from the ball valve, the pressure in chamber P is higher than the pressure in chamber F, and flow of fluid is made stationary by primary cup's sealing the passage. As the fluid pressure in chamber F drops thereafter, the operating pressure is generated by the pedal depressing force and the sectional area of chamber P.

An orifice is provided in the passage between chamber F and the reservoir for smooth pedal feel.

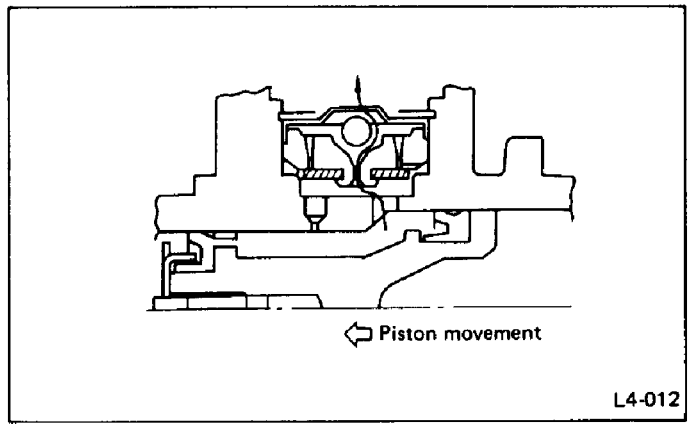

Fig. 6

3) When slackening pedal depression
Brake fluid is supplied from the reservoir through the supply valve by negative pressure generated in chamber F. Fluid is also supplied to chamber P through chamber F.

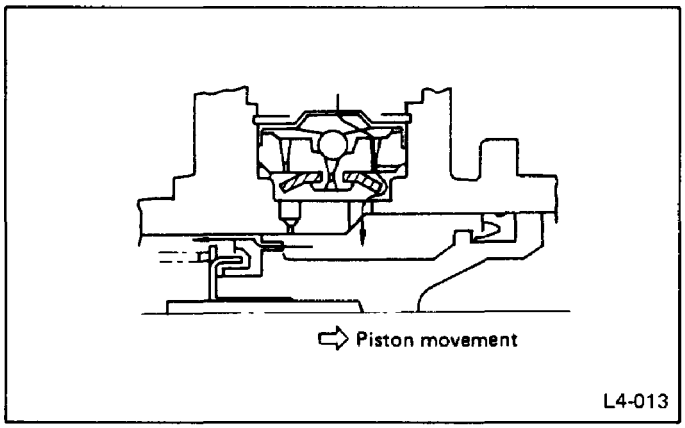

Fig. 7

4) When pedal is released
When the brake pedal is released, a residual pressure is generated by the amount of fluid oversupplied to chamber F while the pedal is being released, the amount of fluid moved from chamber F to chamber P during low pressure period, and the amount of fluid supplied from the reservoir. This excessive amount of fluid in both chambers is returned to the reservoir through the notch mentioned previously until the pressure becomes zero.

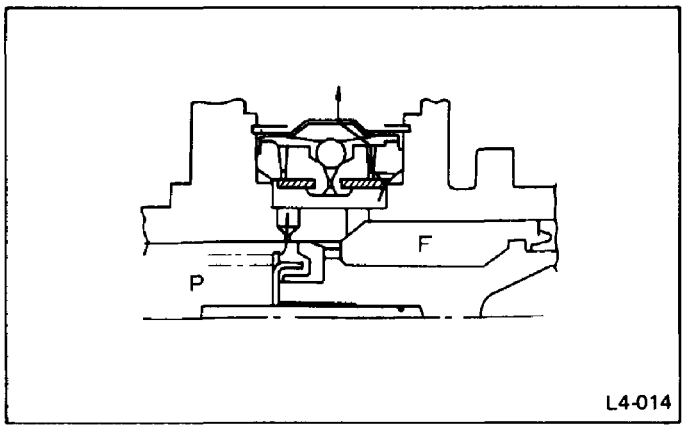

Fig. 8

Fast-fill effect

The pedal stroke on the primary side is shortened because brake fluid flows from chamber F. The secondary side pedal stroke is also shortened since a large amount of fluid fed from chamber F to chamber P separates the primary piston and secondary piston.

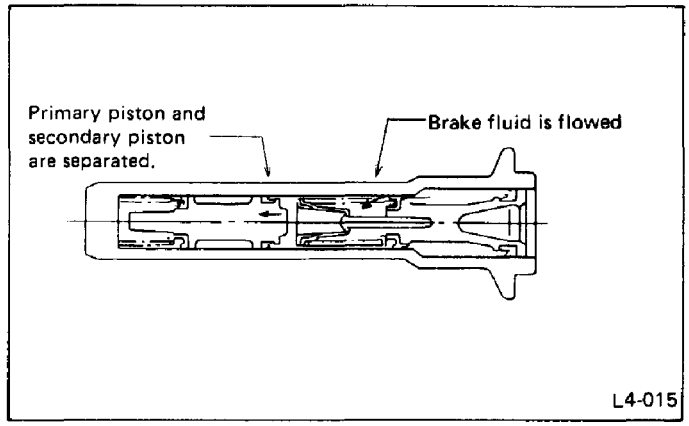

Fig. 9

With the FFV provided, the piston stroke can be made shorter than that of the conventional master cylinder through the above-mentioned process. That is, the brake pedal stroke is shortened, and brake pedal feel is improved.

BRAKE FLUID LEVEL INDICATOR

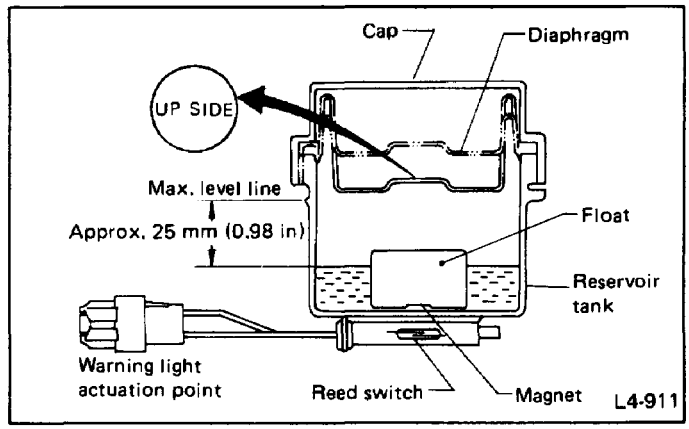

Fig. 10

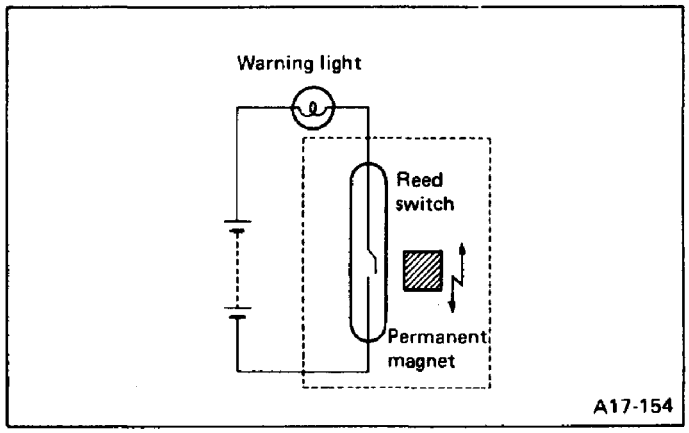

Fig. 11

Under normal conditions, the float remains above the reed switch, and the line of the magnetic force from the permanent magnet in the float is unable to activate the reed switch. Therefore, the circuit is kept open, and the warning light remains off. The float lowers as the brake fluid level lowers, and if it falls below the specified fluid level [approx. 25 mm (0.98 in) below the MAX level line], the reed switch will be activated by the permanent magnet to close the circuit. In this event, the warning light comes on and warns the driver of a reduction of the brake fluid level.
However, the lamp may be lighted momentarily even when the brake fluid surface is still above the specified level, if the vehicle body tilts or swings largely.

Brake Booster

CHECK VALVE

The check valve is built into the vacuum hose. Its orientation is indicated on the label attached to the vacuum hose.

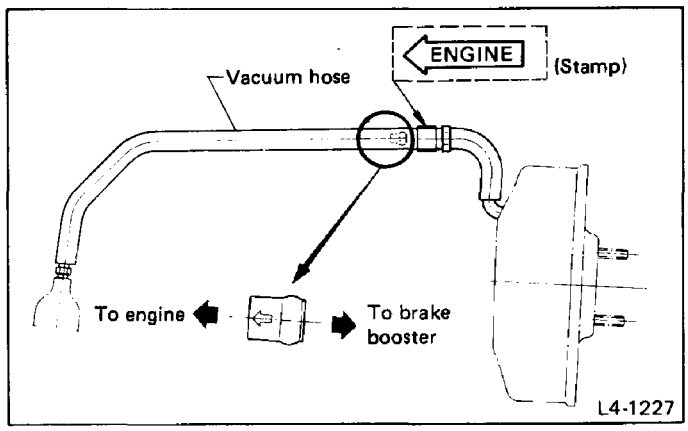

Fig. 12

Proportioning Valve

The proportioning valve for dual piping systems is adopted for controlling the braking force.

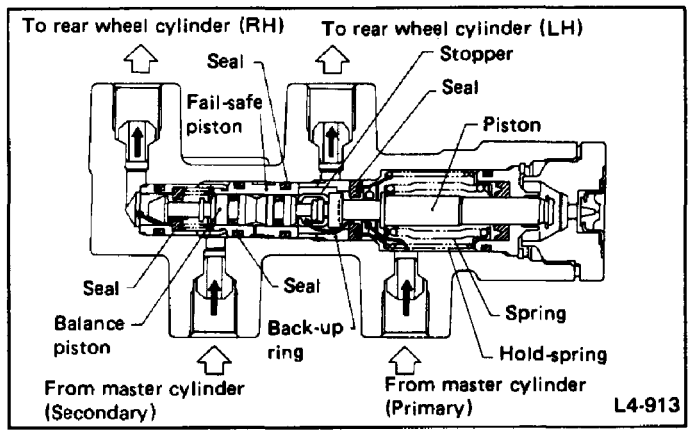

Fig. 13 Construction

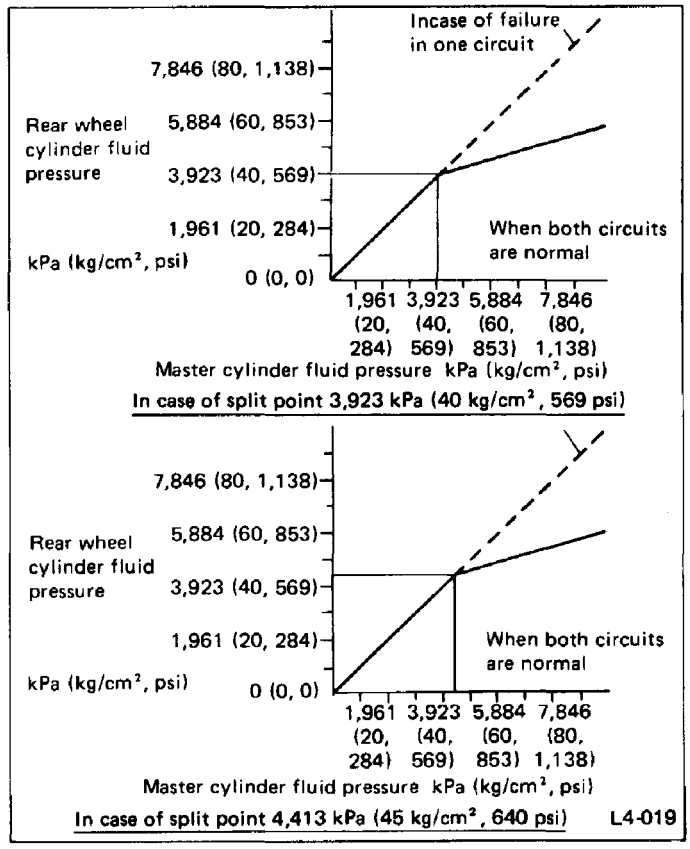

Fig. 14 Characteristic curve

OPERATION

OPERATION DURING NORMAL CONDITIONS

1. Prior to valve operation (Before split point)

When the fluid pressure in the master cylinder is low (the fluid pressure before the split point), the piston is pressed by the spring load and the valve remains inoperative. As a result, the fluid pressure in the master cylinder is held equal to the fluid pressure in the rear wheel cylinder.

2. After valve operation (After split point)

1) When the master cylinder fluid pressure rises, the piston in the primary circuit is moved rightward against the spring load, and brought into contact with the seal (1) (as shown in the figure). The master cylinder fluid pressure chamber (chamber A) is therefore cut off from the rear wheel cylinder fluid pressure chamber (chamber B), and the fluid pressure to the rear wheel cylinder is thus controlled. (The pressure at this moment is the split point pressure.)

If the fluid pressure in chamber A rises further, the piston is moved leftward, off the seal (1), and this causes the fluid pressure in chamber B to rise. The piston is then moved rightward, and brought into contact with the seal (1) again. After this, the piston repeats this contact with the seal (1) in this way, thereby controlling the fluid pressure in the rear wheel cylinder.

2) When the fluid pressure in chamber B is controlled in the secondary circuit, the balance piston is moved rightward by the fluid pressure difference between chamber B and chamber C, and brought into contact with the seal (2), and the fluid pressure in chamber D is controlled. Since sectional areas A1 and A2 are equal, the balance piston is pushed by equal forces from the right and left. If the fluid pressure rises in chamber B, the balance piston performs control to equalize the fluid pressure in chamber D and chamber B by repeating open-close operation with the seal (2).

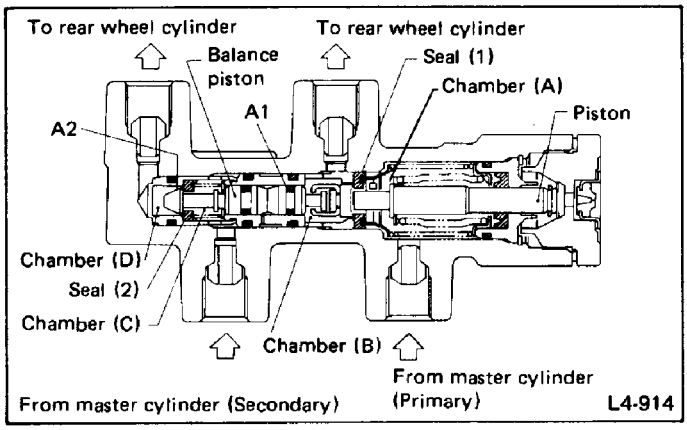

Fig. 15

OPERATION IN CASE OF CIRCUIT FAILURE

1. Failure of primary circuit

If the primary circuit fails, the fail-safe piston and balance piston are moved rightward by the fluid pressure in the master cylinder in the secondary circuit until the piston contacts the plug. In this case, the balance piston remains off the seal (2), and no split point is created in the graph. That is, the fluid pressure in the secondary side rear wheel cylinder is equal to the fluid pressure in the master cylinder.

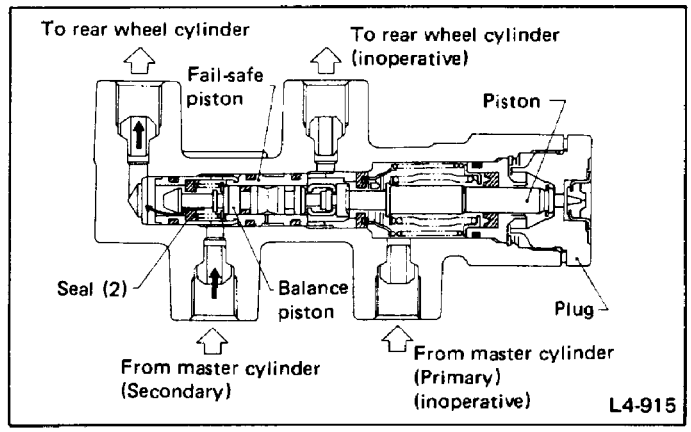

Fig. 16

2. Failure of secondary circuit

If the secondary circuit fails, the balance piston is moved leftward by the fluid pressure in chamber B until the end of the piston contacts the stopper. Since sectional area A1 is greater than A2, the piston remains unmoved even after the master cylinder fluid pressure has reached the split point, and the piston is kept off the seal (1). Hence, no split point is created in the graph, and the rear wheel cylinder fluid pressure of the primary circuit is kept equal to the master cylinder fluid pressure.

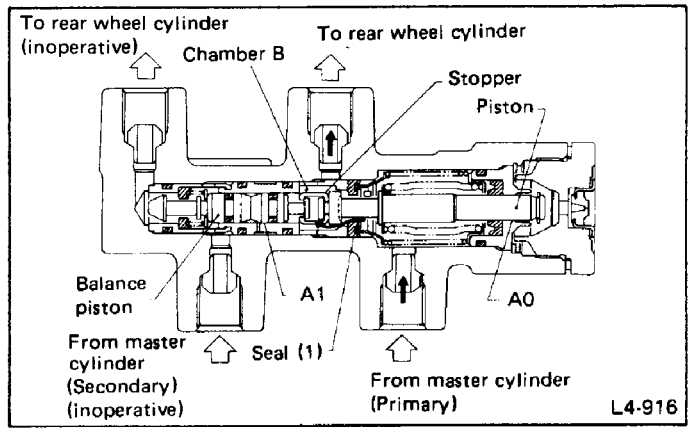

Fig. 17

Hill-Holder

OUTLINE

Hill-holder is a device to make starting on an uphill road easily and permits even a driver not yet familiarized with starting by use of parking brake to start the vehicle smoothly.
When pressing down the clutch pedal with the brake pedal depressed in order to start the vehicle on an uphill road, this device holds the brake temporarily upon taking your foot off the brake pedal (until the clutch pedal is released). Therefore, smooth starting is enabled by usual engagement of the clutch while depressing the accelerator pedal.

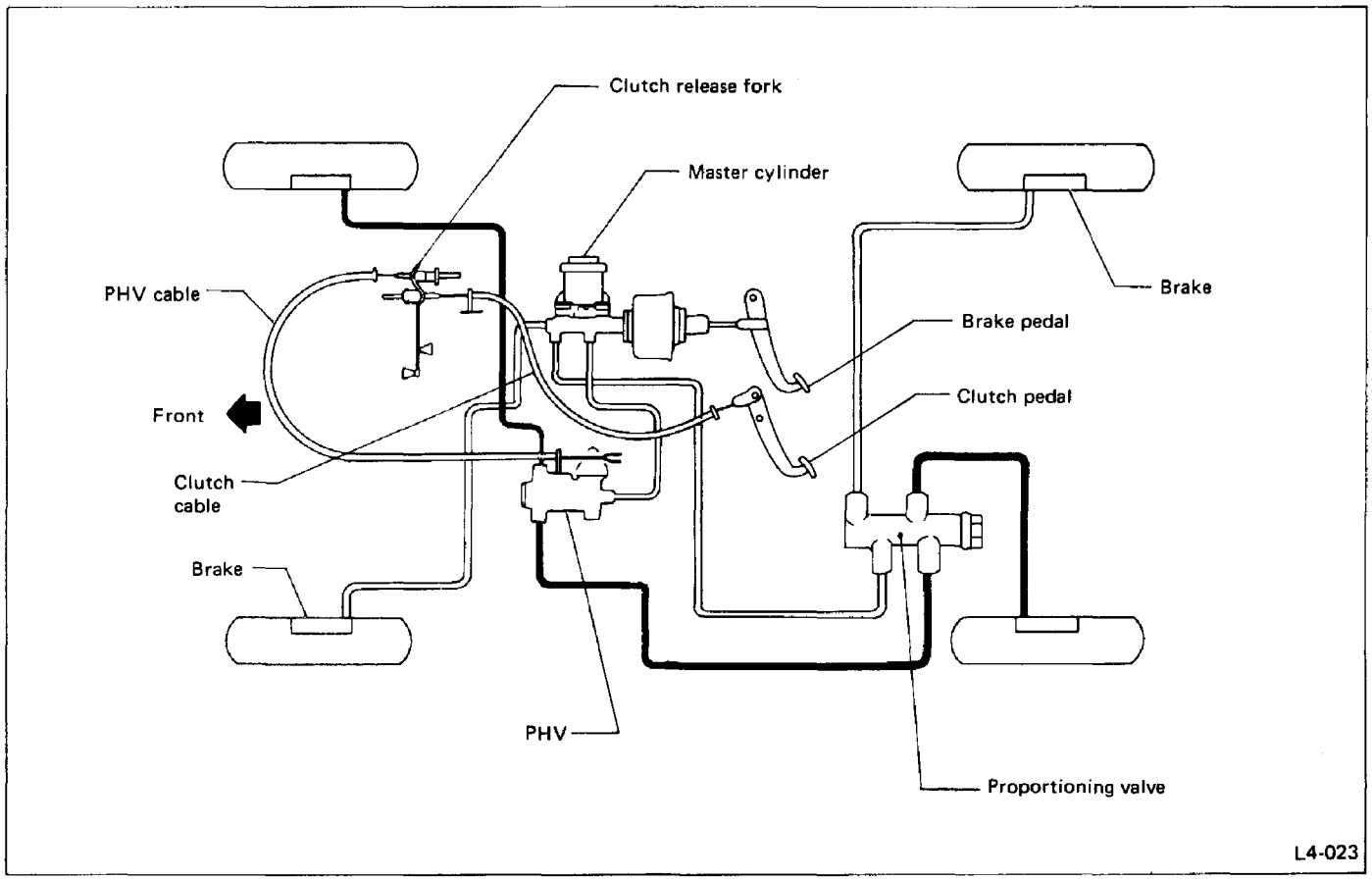

Fig. 18 Outline of hill-holder

PRESSURE HOLD VALVE (PHV)

PHV (Pressure Hold Valve) is connected to one of the service brake pipes and pushrod (8) is pushed in and/or pulled out by cam shaft (2) interlinked with the clutch pedal to change the clearance between ball (3) and seal (5), thereby opening and/or closing the hydraulic circuit. Normally, on a flat road, ball (3) is located at the front and the valve is kept opened regardless of the position of the pushrod. (This status is the same as on a downhill road.)

When stopping the vehicle on an uphill road by depressing both brake and clutch pedals, the ball rolls toward the rear and, at the same time, the pushrod retracts to close the valve, so that hydraulic pressure is maintained. Even when taking your foot off the brake pedal, the hydraulic pressure is maintained so far as the clutch pedal is kept depressed. In this status, when engaging the clutch ordinarily while depressing the accelerator pedal, the maintained hydraulic pressure is released simultaneously with the generation of driving force to permit smooth starting.

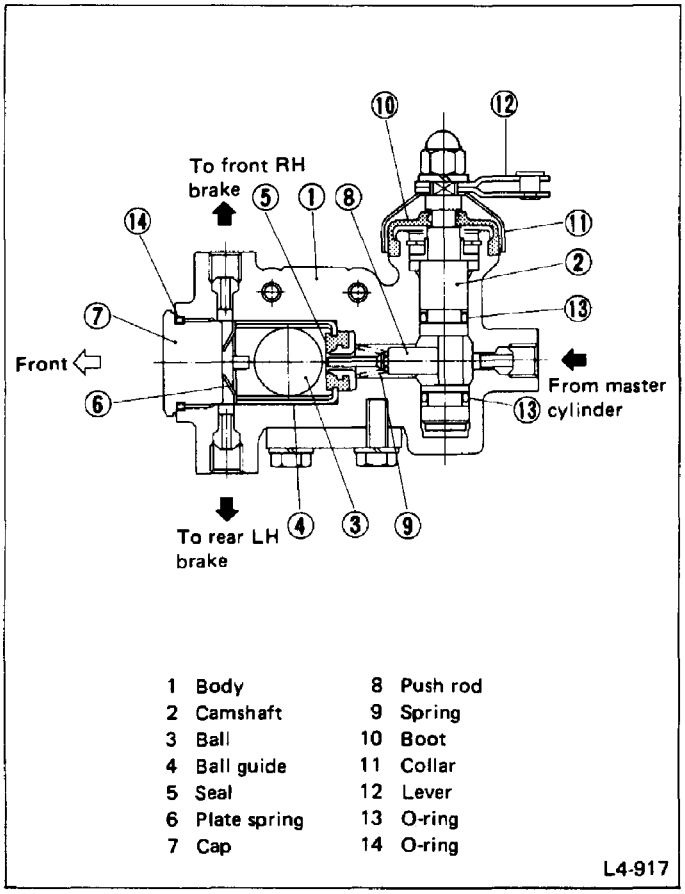

Fig. 19 Pressure hold valve

- Activating condition

This device is activated only when depressing the clutch and brake pedals with the vehicle stopped on an uphill road.

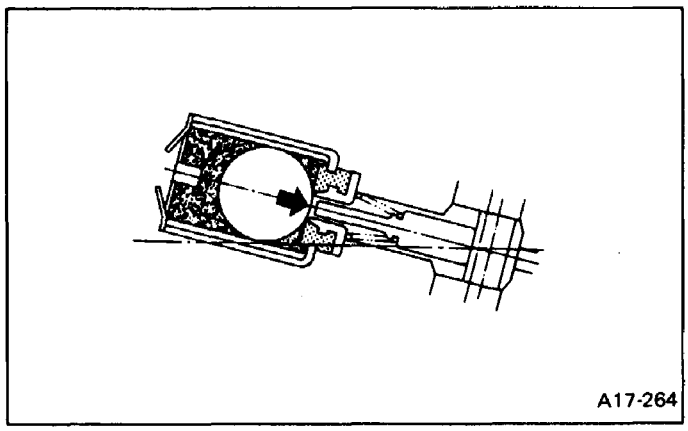

Fig. 20

When stopping the vehicle on an uphill road, the ball rolls toward the rear to seal the port and therefore the hydraulic pressure is maintained even by releasing the brake pedal.

- Inactive status

This accessory is not activated in any status other than the above.

1) While driving

(1) During acceleration or usual driving

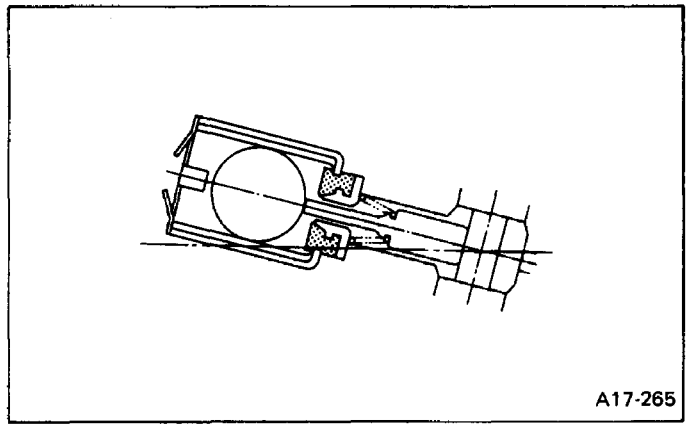

Fig. 21

Since the clutch pedal is not depressed, the pushrod is located outside the port. In this status, hydraulic pressure cannot be maintained.

(2) During deceleration

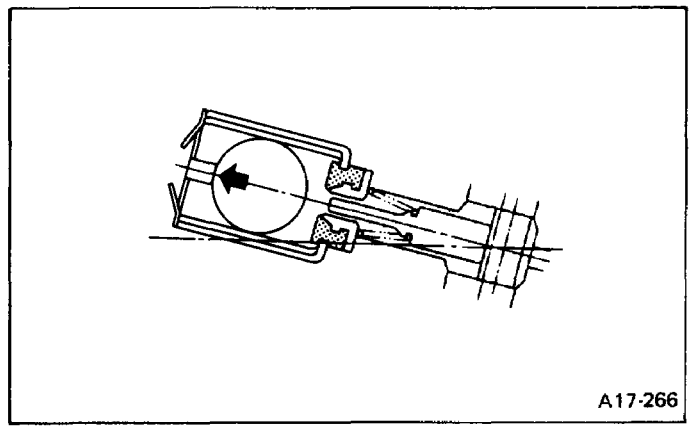

Fig. 22

Even when depressing the clutch pedal, the ball is kept at the front by decelerating force. In this status, hydraulic pressure is not maintained.

2) When stopping

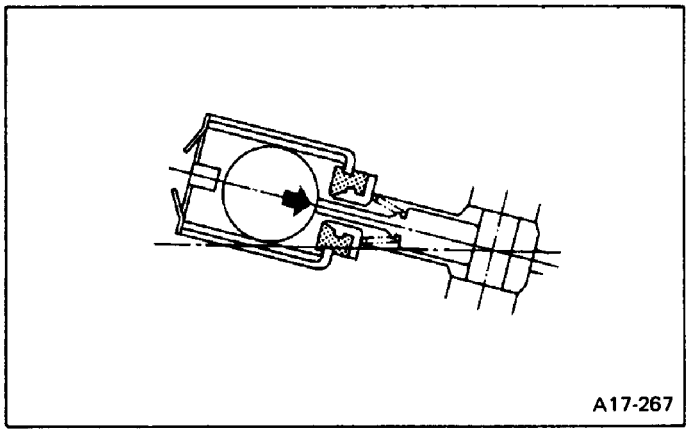

Fig. 23

Even when stopping on an uphill road, hydraulic pressure is not maintained unless the clutch pedal is depressed.

3) On a flat road

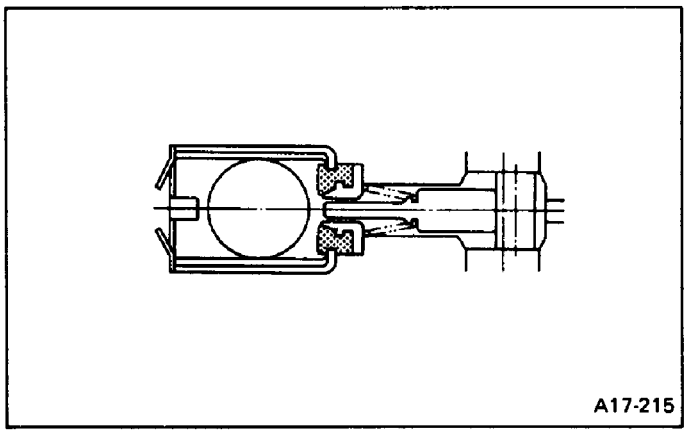

Fig. 24

This device is not designed to operate on a flat road, except for reversing.

OPERATIONAL PRECAUTIONS

1) Hill-holder is a device used to facilitate starting on an uphill road. For stoppage on the uphill road, therefore, you must keep the brake pedal depressed or pull the parking brake.
2) Hill-holder may not be activated on a slope of an extremely small inclination.
3) If the brake is not held sufficiently upon releasing the brake pedal with the clutch pedal depressed, press down the brake pedal a little strongly once again.
4) If depressing the clutch pedal again in the course of starting operation, the brake may be released. In this case, depress the brake pedal again. (Because the brake is released when returning the clutch pedal halfway.) (For example, when interrupting starting operation or shifting gear from other than LOW because of misoperation.)
5) Before you leave the driver's seat, be sure to pull the parking lever and confirm that the vehicle is kept stopped upon releasing the clutch pedal.
6) When reversing the vehicle on a flat road, the following phenomena may be felt. These phenomena are caused by the activation of the hill holder, which does not constitute abnormality.
   (1) Brake effect remains even after releasing the brake pedal if depressing the clutch and brake pedals when reversing the vehicle.
   (2) A slight shock is given to the vehicle when starting the vehicle after stopping the reverse movement.

SPECIFICATIONS AND SERVICE DATA

SPECIFICATIONS

	Engine		1800 cc		2700 cc	
	Driving system		FWD	4WD	FWD	4WD
Front brake	Type		Disc (AD type, ventilated)			
	Effective disc diameter	mm (in)	192 (7.56)		212 (8.35)	
	Disc thickness x outer diameter	mm (in)	18 x 242 (0.71 x 9.53)		22 x 262 (0.87 x 10.31)	
	Effective cylinder diameter	mm (in)	53.97 (2.1248)			
	Pad dimensions (length x width x thickness)	mm (in)	118 x 45.5 x 12 (4.65 x 1.791 x 0.47)			
	Clearance adjustment		Automatic adjustment			
Rear brake	Type		Drum (Leading-Trailing)	Disc (Colette)		
	Effective drum or disc diameter	mm (in)	180 (7.09)	190 (7.48)	220 (8.66)	
	Disc thickness x outer diameter	mm (in)	–	10 x 226 (0.39 x 8.90)	10 x 256 (0.39 x 10.08)	
	Effective cylinder diameter	mm (in)	17.46 (11/16)	30.23 (1.1902)		
	Lining or pad dimensions (length x width x thickness)	mm (in)	172 x 30 x 4.5 (6.77 x 1.18 x 0.177)	71 x 36 x 10 (2.80 x 1.42 x 0.39)		
	Clearance adjustment		Manual adjustment	Automatic adjustment		
Master cylinder	Type		Tandem (with fast fill mechanism)		Tandem	
	Effective diameter	mm (in)	20.64 (13/16) (Small) 25.40 (1) (Large)		23.81 (15/16)	
	Reservoir		Sealed type			
Brake booster	Type		Vacuum suspended		Vacuum suspended (Tandem)	
	Effective diameter	mm (in)	205 (8.07)		180 (7.09)+205 (8.07)	
Proportioning valve	Split point	kPa (kg/cm^2, psi)	3,923 (40, 569)	4,413 (45, 640)	3,923 (40, 569)	4,413 (45, 640)
	Reducing ratio		0.3			
Brake line			Dual circuit system			
Brake fluid reservoir capacity		cm^3 (cc, cu in)	160 (160, 9.76)			
Parking brake			Mechanical on front brakes			
Hill-holder			–			Equipped

SERVICE DATA

ITEM			STANDARD	SERVICE LIMIT
Front brake (Disc type)	Pad thickness (including back metal)		18 mm (0.71 in)	7.5 mm (0.295 in)
	Disc thickness Ventilated disc	Except XT6	18 mm (0.71 in)	16.0 mm (0.630 in)
		XT6	22 mm (0.87 in)	20.0 mm (0.787 in)
	Disc run-out			0.10 mm (0.0039 in)
Rear brake (Drum type)	Inside diameter		180 mm (7.09 in)	182 mm (7.17 in)
	Lining thickness		4.5 mm (0.177 in)	1.5 mm (0.059 in)
Rear brake (Disc type)	Pad thickness (including back metal)	Except XT6	15 mm (0.59 in)	6.5 mm (0.256 in)
		XT6		8.0 mm (0.315 in)
	Disc thickness		10 mm (0.39 in)	8.5 mm (0.335 in)
	Disc run-out			0.10 mm (0.0039 in)
Brake booster	Brake fluid pressure without engine running		At brake pedal force 147 N (15 kg, 33 lb): 392 kPa (4 kg/cm^2, 57 psi) At brake pedal force 294 N (30 kg, 66 lb): 2,452 kPa (25 kg/cm^2, 356 psi) (Except XT6) 1,569 kPa (16 kg/cm^2, 228 psi) (XT6)	
	Brake fluid pressure with engine running and vacuum at 66.7 kPa (500 mmHg, 19.69 inHg)		At brake pedal force 147 N (15 kg, 33 lb): 4,904 kPa (50 kg/cm^2, 711 psi) (Except XT6) 5,394 kPa (55 kg/cm^2, 782 psi) (XT6) At brake pedal force 294 N (30 kg, 66 lb): 6,375 kPa (65 kg/cm^2, 924 psi) (Except XT6) 9,317 kPa (95 kg/cm^2, 1,351 psi) (XT6)	
Parking brake	Lever stroke		3 to 4 notches/245 N (25 kg, 55 lb)	
Hill-holder	Adjusting shim Thickness		0.6 mm (0.024 in) (One shim increases an angle of approx. 0.5°.)	
	Part Number		725807000	

RECOMMENDED BRAKE FLUID

FMVSS No. 116, fresh DOT3 or 4 brake fluid

a. Avoid mixing brake fluid of different brands to prevent the fluid performance from degrading.
b. When brake fluid is supplemented, be careful not to allow any dust into the reservoir.
c. Use fresh DOT3 or 4 brake fluid when replacing or refilling the fluid.

COMPONENT PARTS

Front Disc Brake

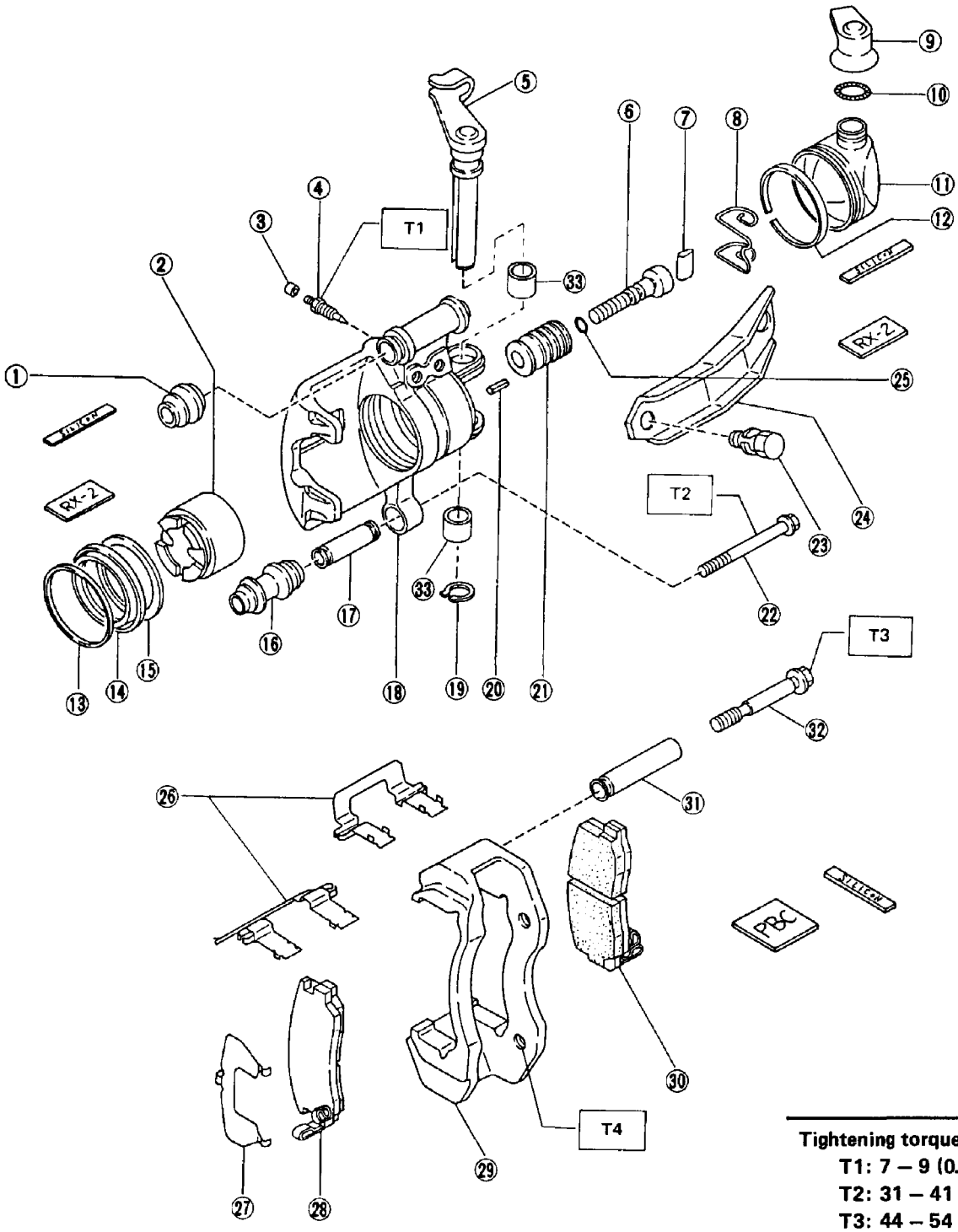

1 Guide pin boot
2 Piston
3 Air bleeder cap
4 Air bleeder screw
5 Lever & spindle
6 Spindle
7 Connecting link
8 Return spring
9 Lever cap (upper)
10 Garter spring
11 Lever cap
12 Retainer
13 Boot ring
14 Piston boot
15 Piston seal
16 Lock pin boot
17 Lock pin sleeve
18 Caliper body
19 Retaining spring
20 Spring pin
21 Cone spring
22 Lock pin
23 Bolt ASSY
24 Bracket
25 O-ring
26 Pad clip
27 Shim
28 Outer pad
29 Support
30 Inner pad
31 Guide pin sleeve
32 Guide pin
33 Needle bearing

Tightening torque: N·m (kg-m, ft-lb)
T1: 7 – 9 (0.7 – 0.9, 5.1 – 6.5)
T2: 31 – 41 (3.2 – 4.2, 23 – 30)
T3: 44 – 54 (4.5 – 5.5, 33 – 40)
T4: 49 – 69 (5.0 – 7.0, 36 – 51)

Fig. 25

L4-1327

Rear Disc Brake

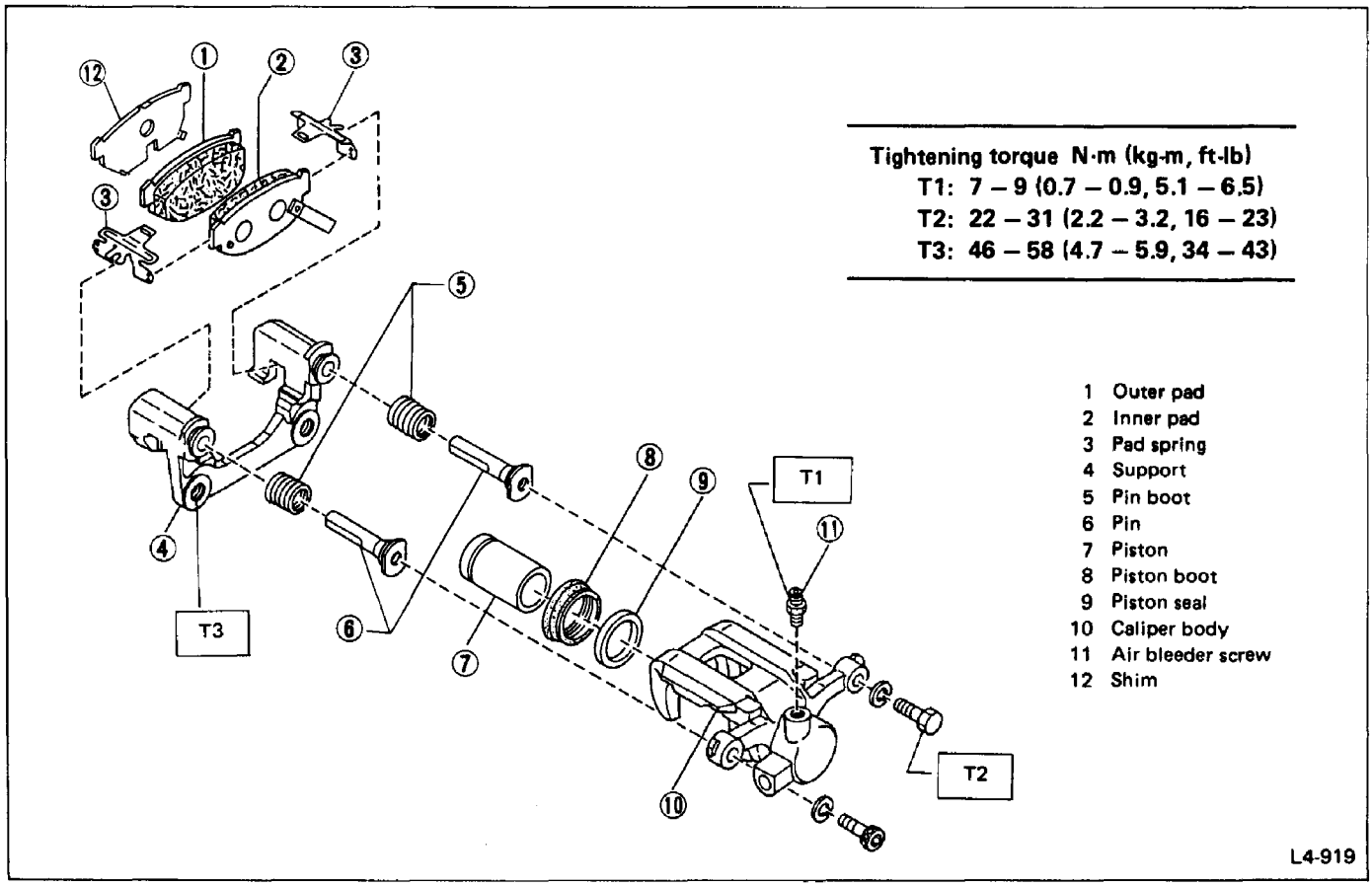

Fig. 26

Rear Drum Brake (FWD)

1 Boot
2 Shoe hold down pin
3 Back plate
4 Adjuster
5 Brake shoe
6 Shoe hold down spring
7 Upper shoe return spring
8 Lower shoe return spring
9 Air bleeder cap
10 Air bleeder screw
11 Boot
12 Cup
13 Piston
14 Wheel cylinder body

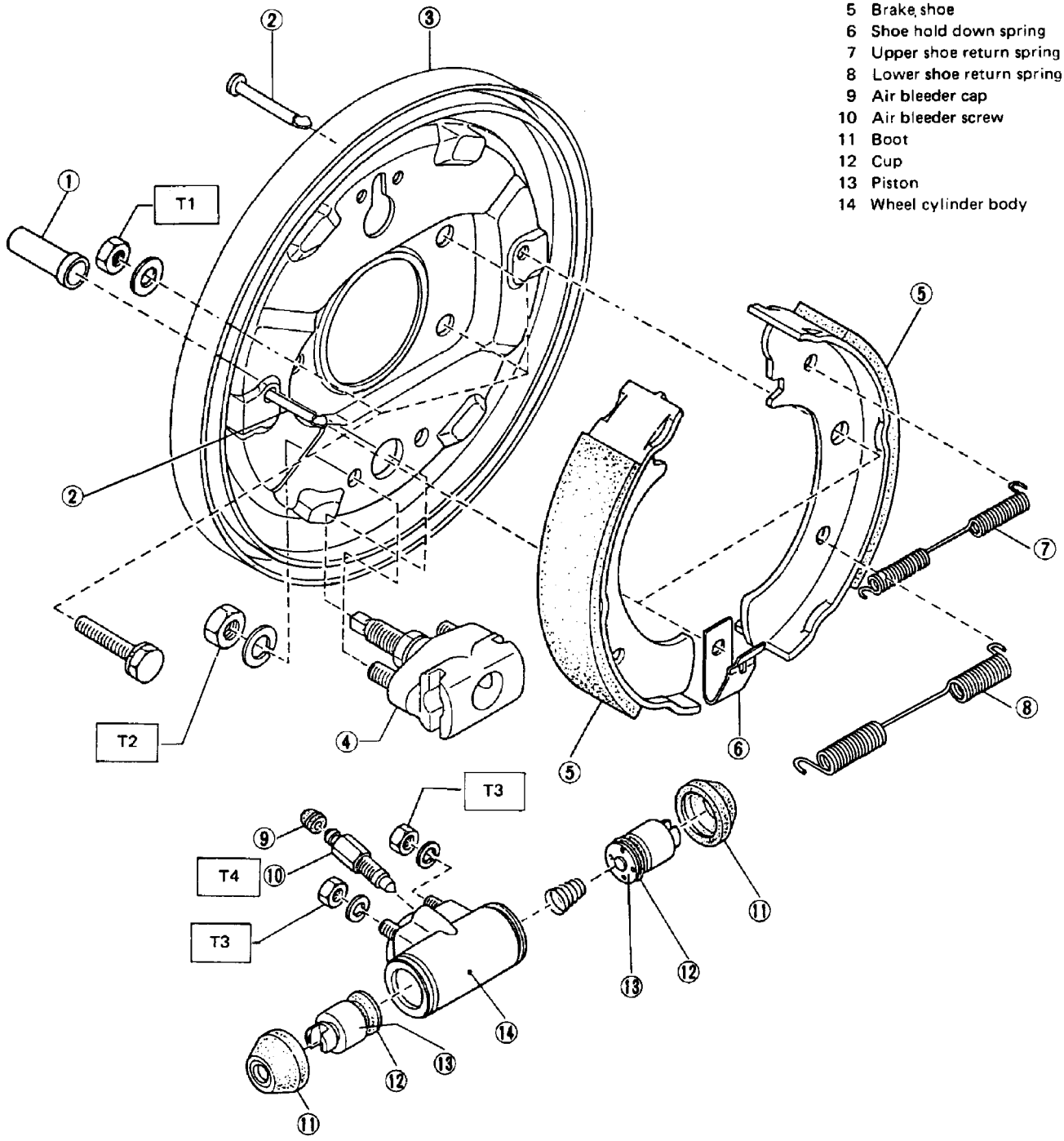

Tightening torque N·m (kg-m, ft-lb)
T1: 46 – 58 (4.7 – 5.9, 34 – 43)
T2: 12.3 – 15.2 (1.25 – 1.55, 9.0 – 11.2)
T3: 8 – 10 (0.8 – 1.0, 5.8 – 7.2)
T4: 7 – 9 (0.7 – 0.9, 5.1 – 6.5)

Fig. 27

L4-920

Master Cylinder (Except XT6)

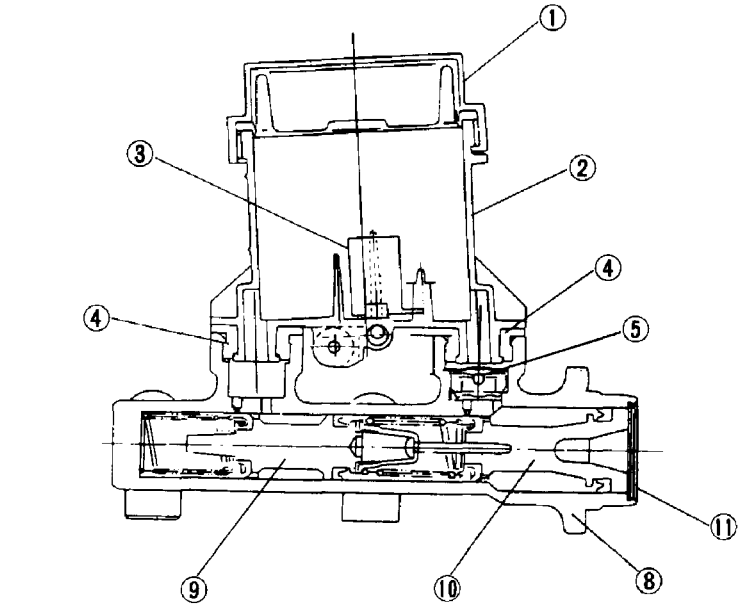

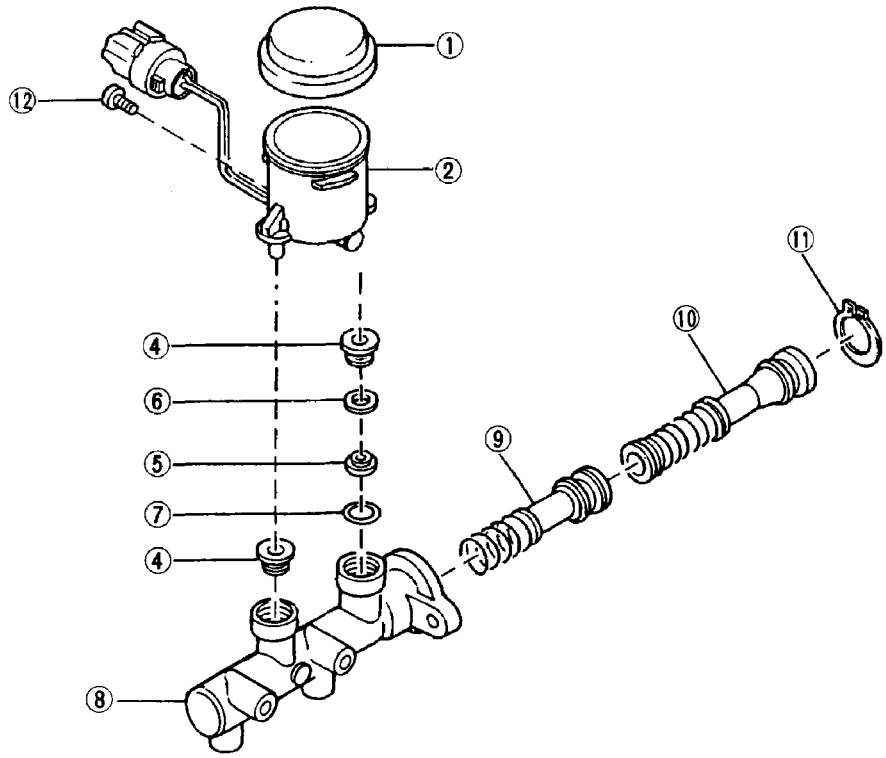

1 Cap
2 Reserve tank
3 Float
4 Seal
5 Valve
6 C-ring
7 O-ring
8 Cylinder body
9 Secondary piston
10 Primary piston
11 C-ring
12 Bolt

Fig. 28 L4-1214

Master Cylinder for XT6

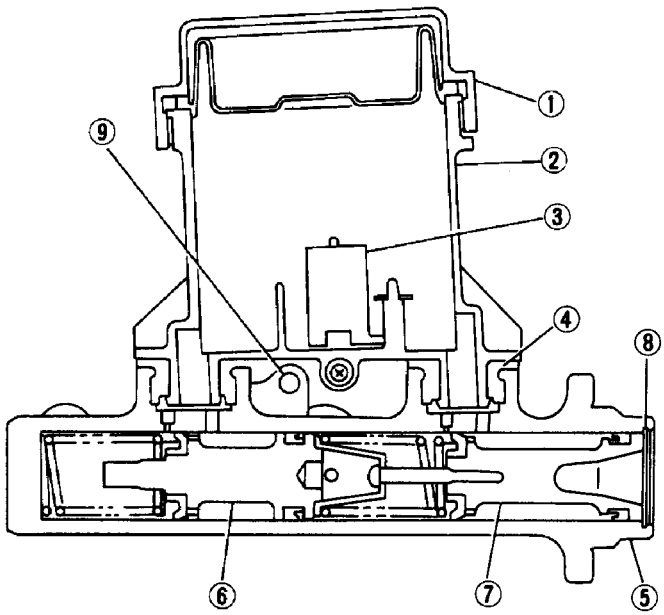

1 Cap
2 Reserve tank
3 Float
4 Seal
5 Cylinder body
6 Secondary piston
7 Primary piston
8 C-ring
9 Bolt

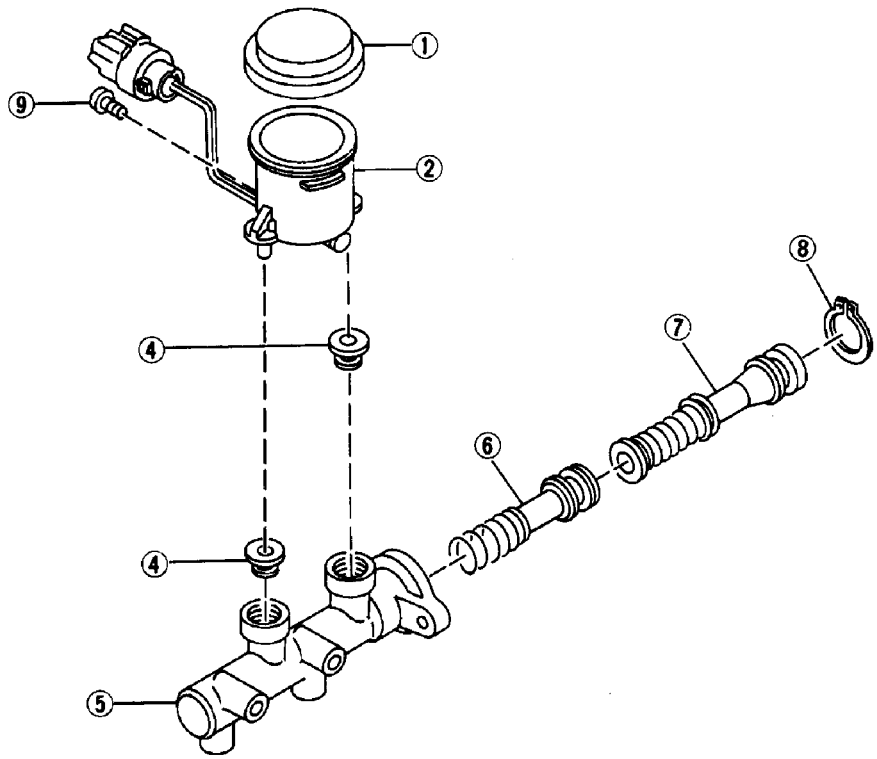

Fig. 29

L4-1328

Brake Booster

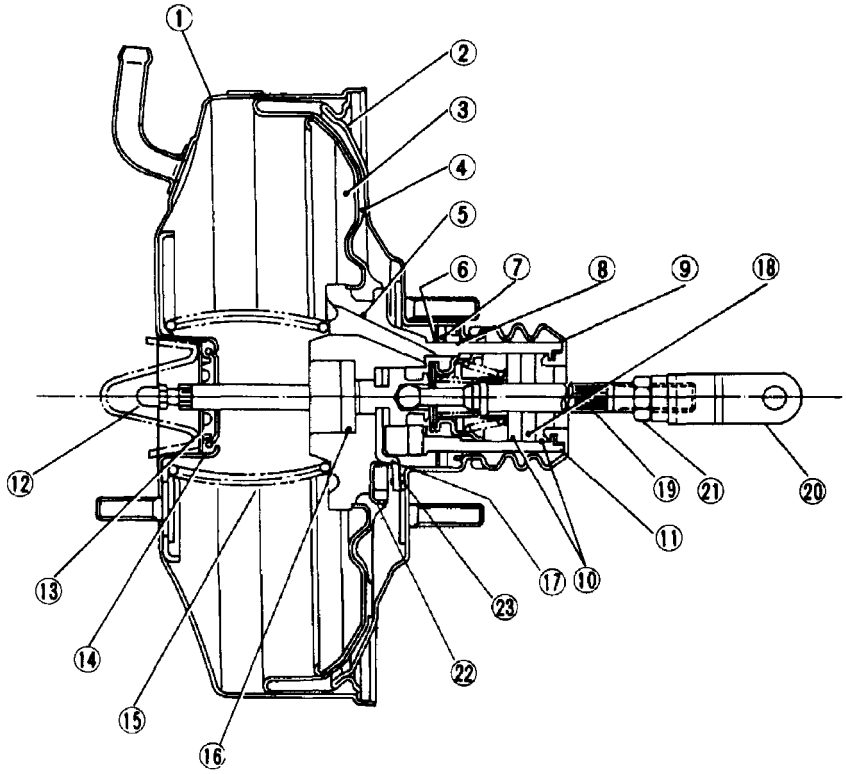

1 Front shell
2 Rear shell
3 Diaphragm plate
4 Diaphragm
5 Valve body
6 Retainer
7 Bearing
8 Seal
9 Valve body guard
10 Filter
11 Retainer
12 Push rod
13 Retainer
14 Plate & seal ASSY
15 Return spring
16 Reaction disc
17 Key
18 Silencer
19 Operating rod
20 Clevis
21 Nut
22 Retainer
23 Stopper

L4-921

Fig. 30 Except XT6

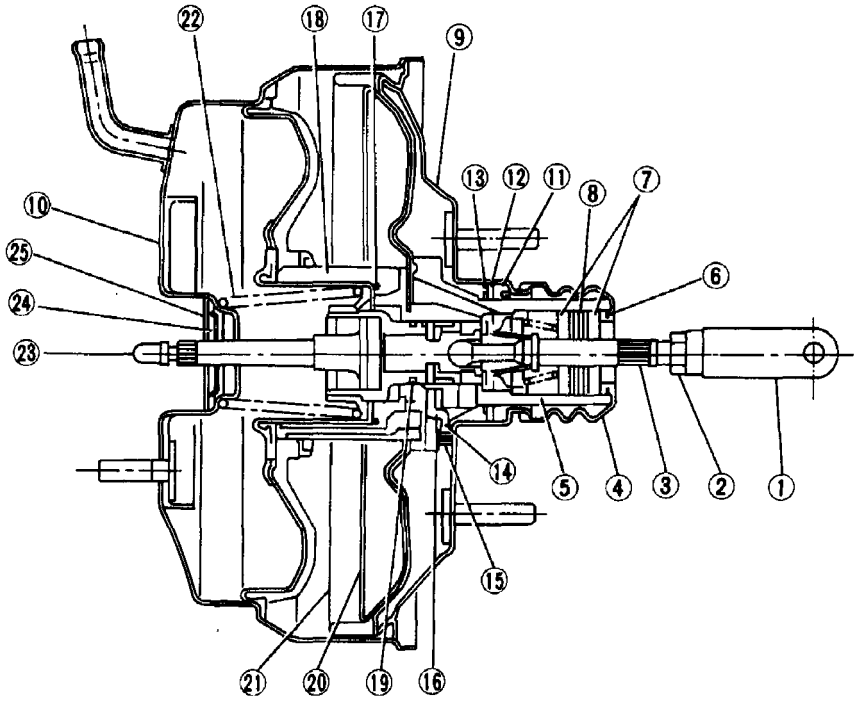

1 Clevis
2 Nut
3 Operating rod
4 Valve body guard
5 Valve body
6 Retainer
7 Filter
8 Silencer
9 Rear shell
10 Front shell
11 Seal valve body
12 Bearing
13 Retainer
14 Key
15 Stopper
16 Retainer
17 O-ring
18 Center body
19 O-ring
20 Diaphragm plate
21 Diaphragm
22 Return spring
23 Push rod
24 Push rod seal
25 Retainer

L4-1329

Fig. 31 XT6

Hill-Holder

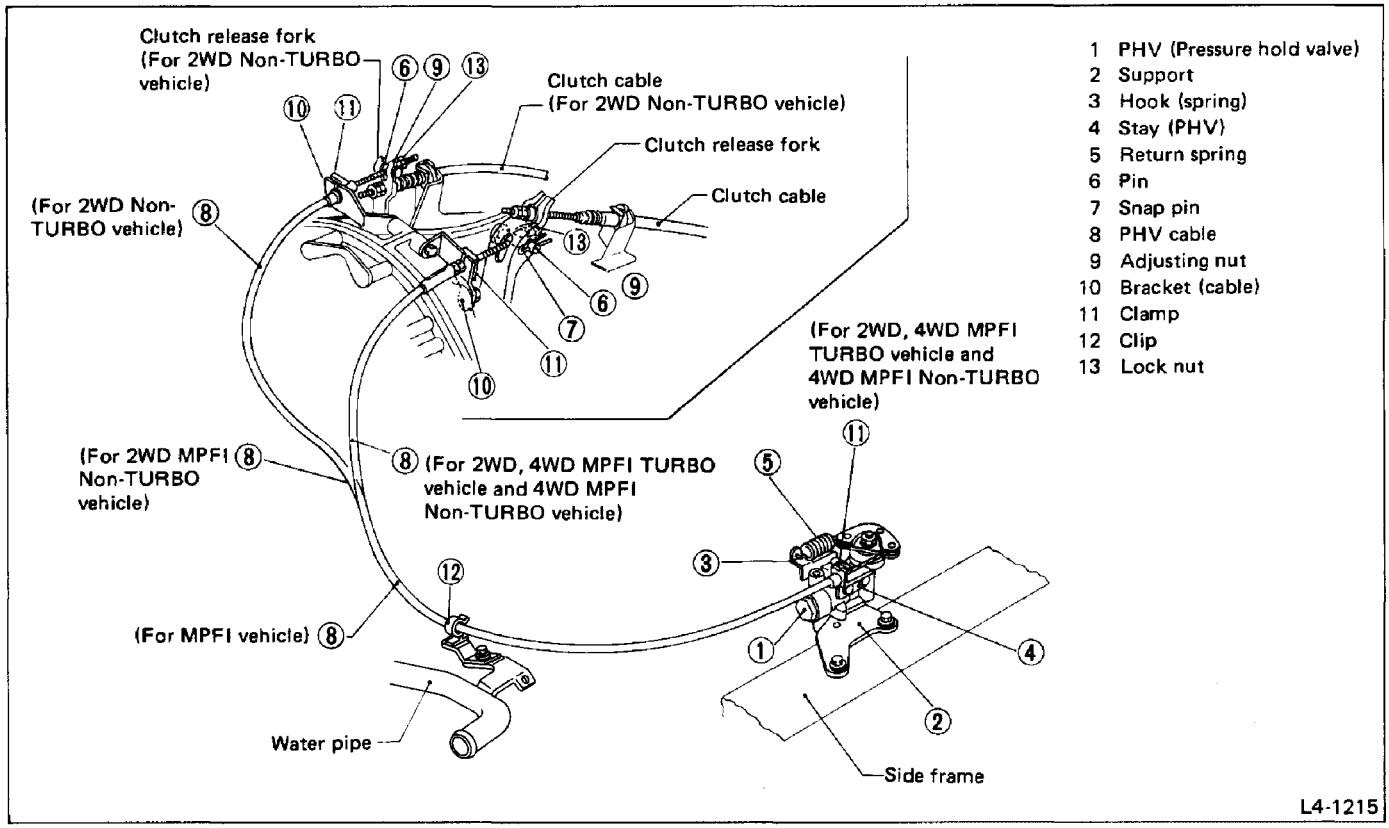

Fig. 32 Component parts of hill-holder (Except XT6)

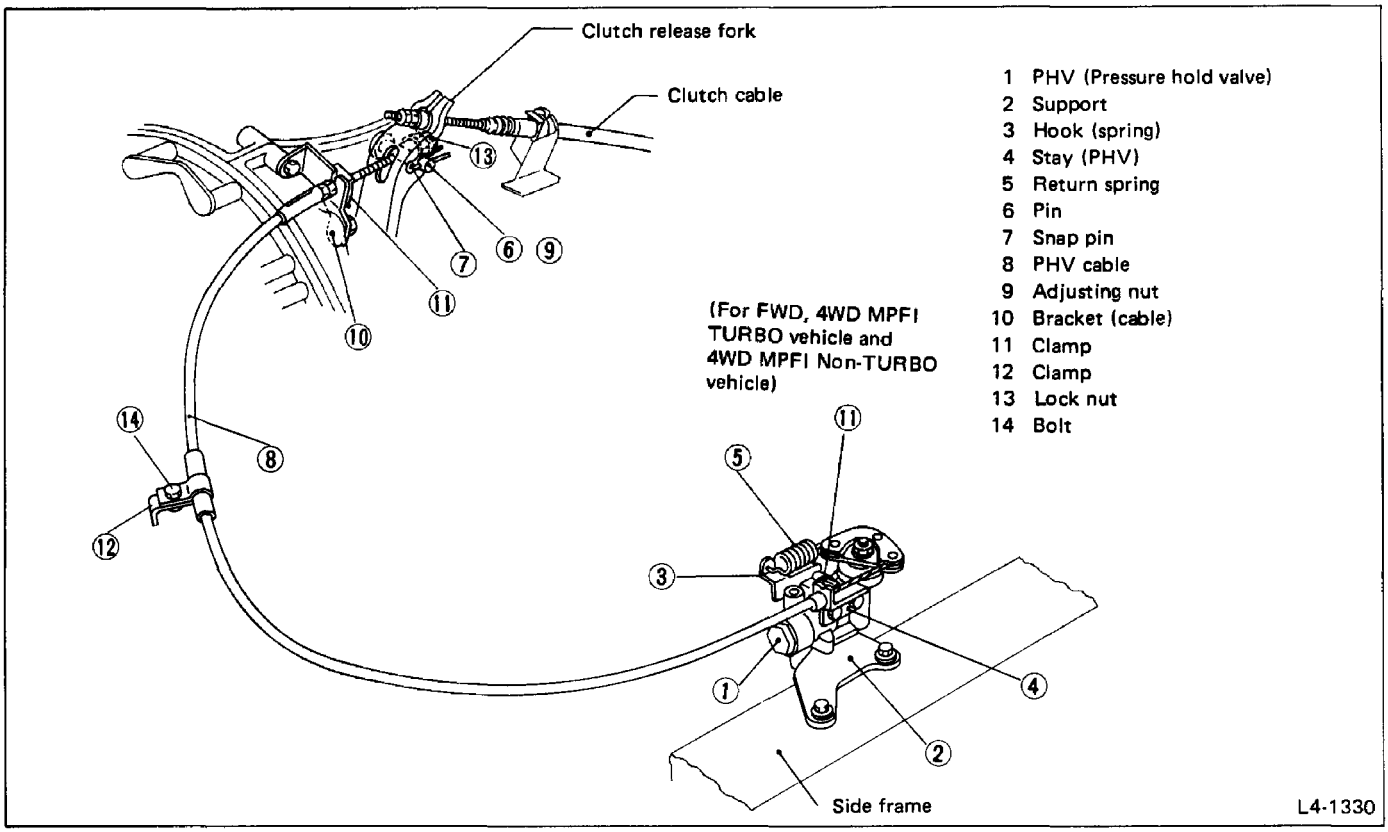

Fig. 33 Component parts of hill-holder for XT6

Parking (Hand) Brake

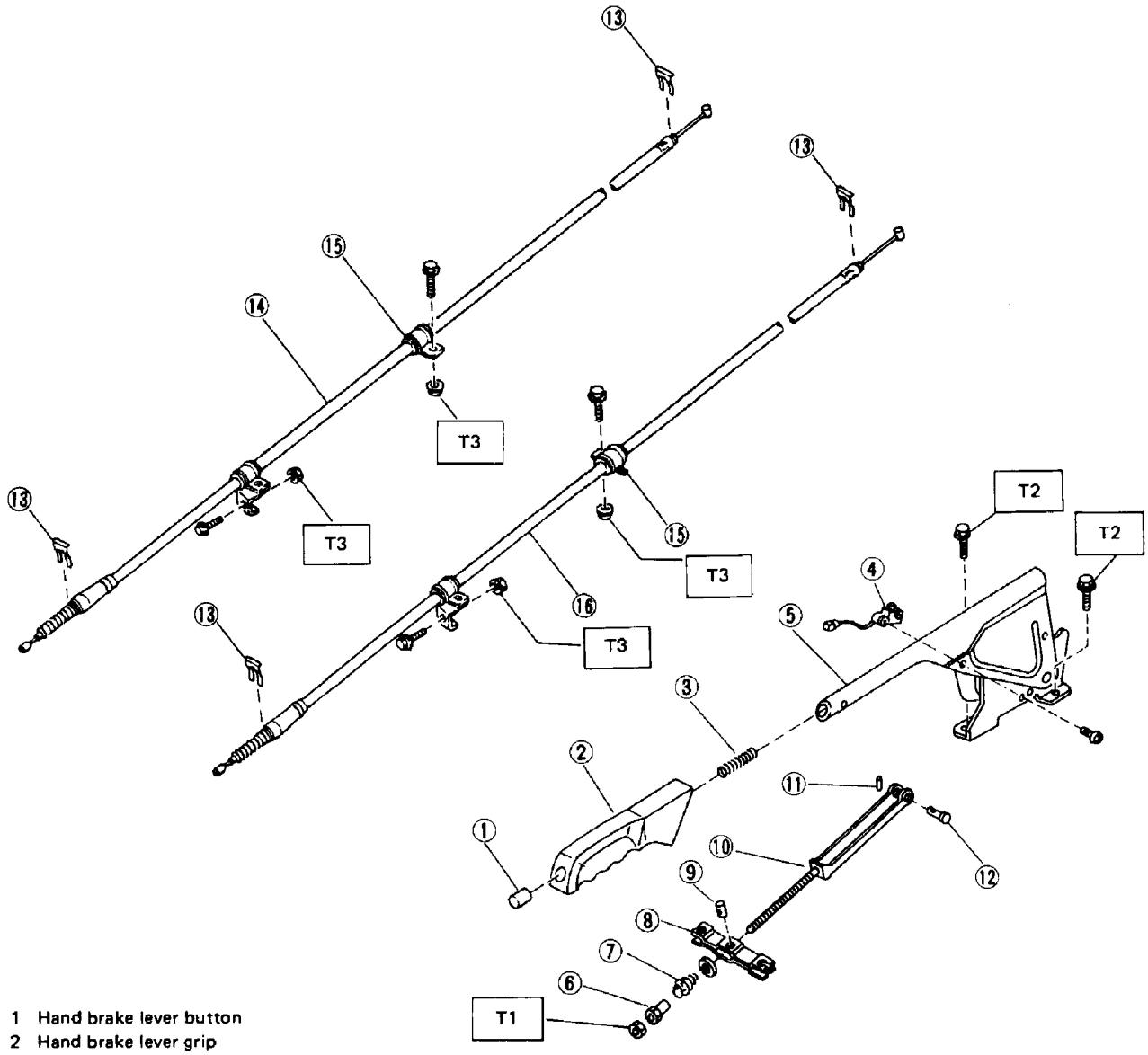

1 Hand brake lever button
2 Hand brake lever grip
3 Hand brake lever spring
4 Hand brake switch
5 Hand brake lever
6 Hand brake adjuster
7 Hand brake spring
8 Equalizer
9 Hand brake pin
10 Hand brake rod
11 Cotter pin
12 Clevis pin
13 Clamp
14 Hand brake cable RH
15 Clamp
16 Hand brake cable LH

Tightening torque N·m (kg-m, ft-lb)
T1: 4.4 – 7.4 (0.45 – 0.75, 3.3 – 5.4)
T2: 10 – 18 (1.0 – 1.8, 7 – 13)
T3: 10 – 16 (1.0 – 1.6, 7 – 12)

Fig. 34

L4-1216

SERVICE PROCEDURE

Front Disc Brake

Grease Application

N : NIGLUBE RX-2 GREASE (003606000 or 725191040)
S : SILICON COMPOUND (003606010 or 725191050)
P : PBC GREASE (003603000 or 725191060)

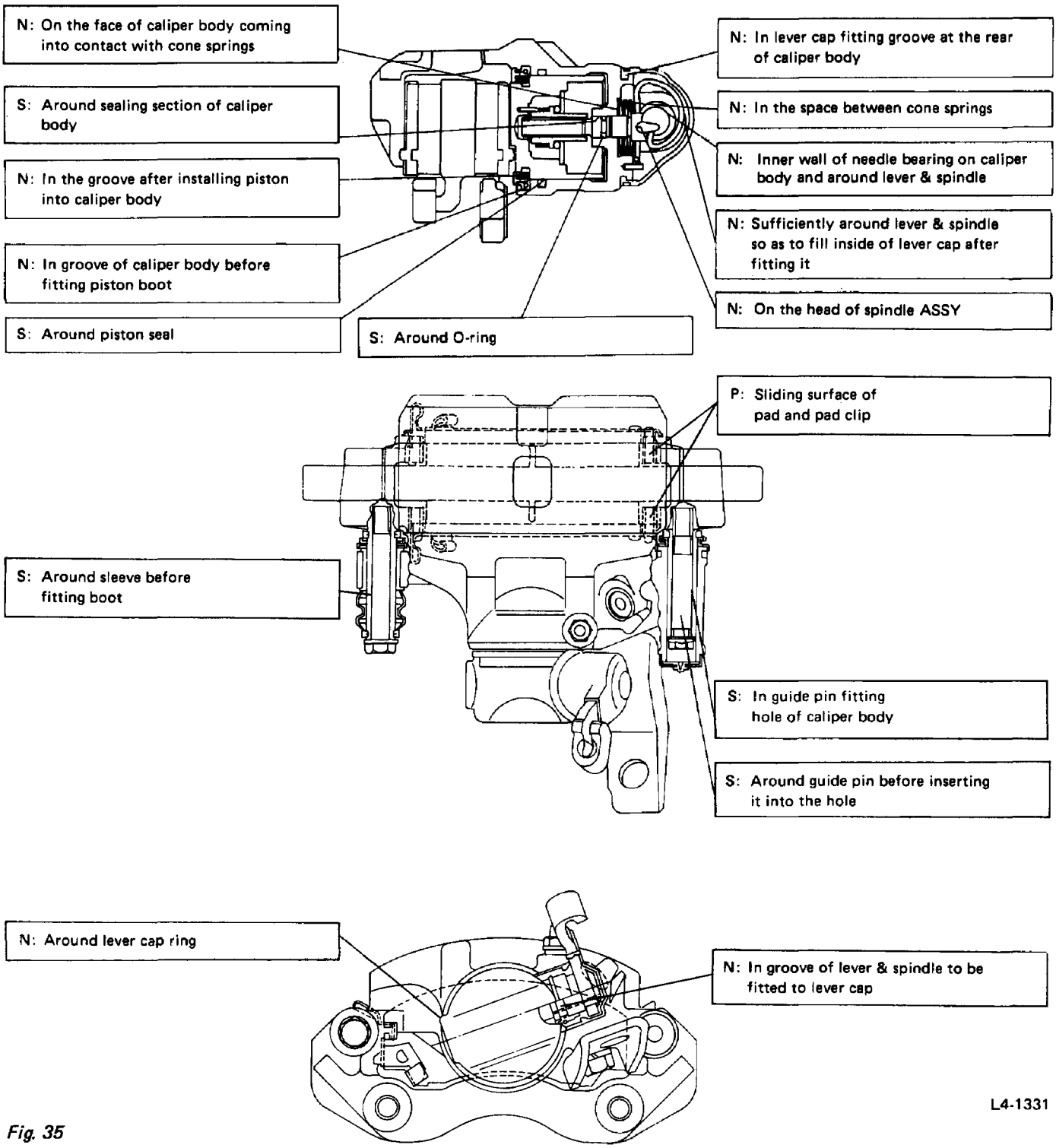

Fig. 35

Replacement of Pad

REMOVAL

1) Return hand brake lever completely.
2) Remove inner cable end from lever, draw out outer cable clamp, then disconnect hand brake cable from caliper body ASSY.

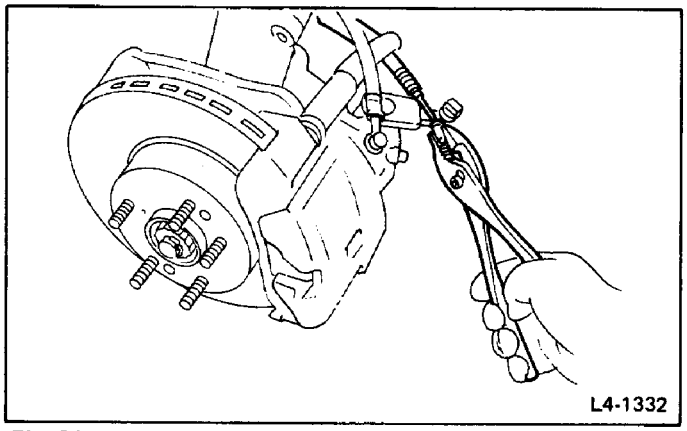

Fig. 36

3) Remove lock pin.

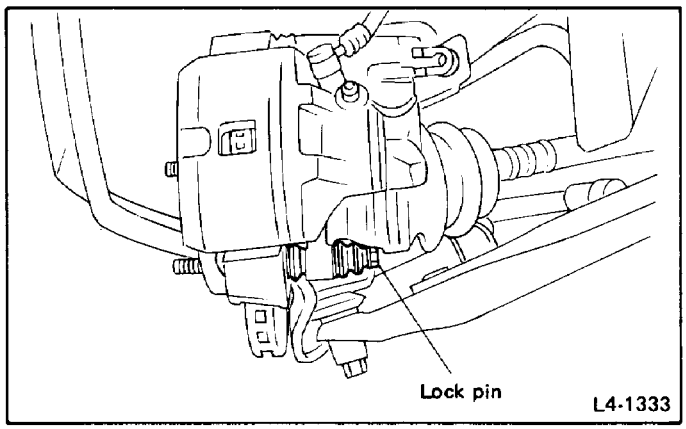

Fig. 37

4) Spin caliper body ASSY on guide pin.

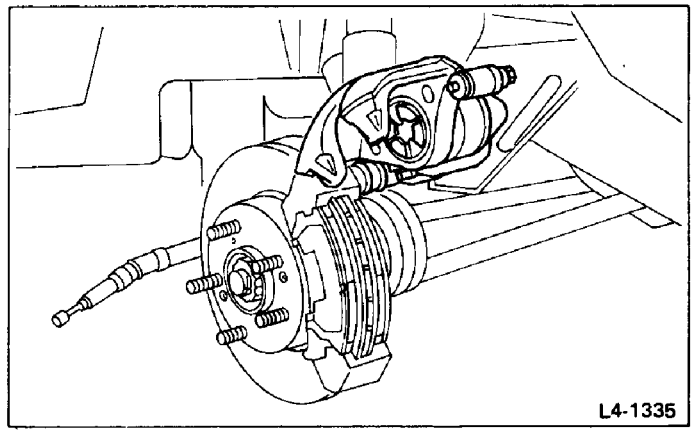

Fig. 38

5) Remove pads from support.

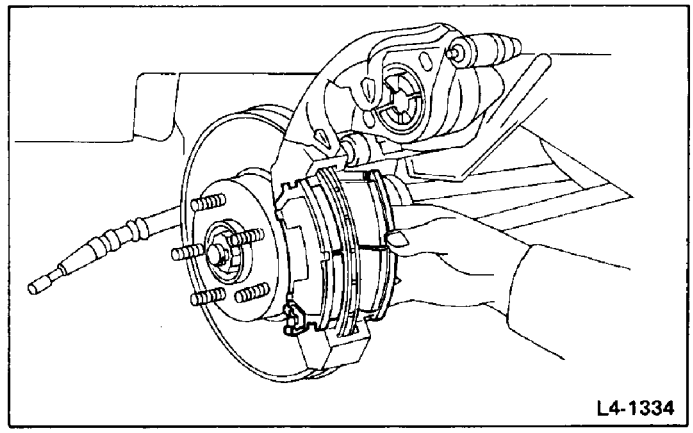

Fig. 39

a. Do not touch the brake pedal after the pads have been removed.
b. Do not disconnect hose.
c. When replacing the pad, do not remove the caliper body, but just turn it enough for removal and installation.

INSPECTION

1) Pad

Check the pad thickness through the inspection hole and replace pads if not within specification.

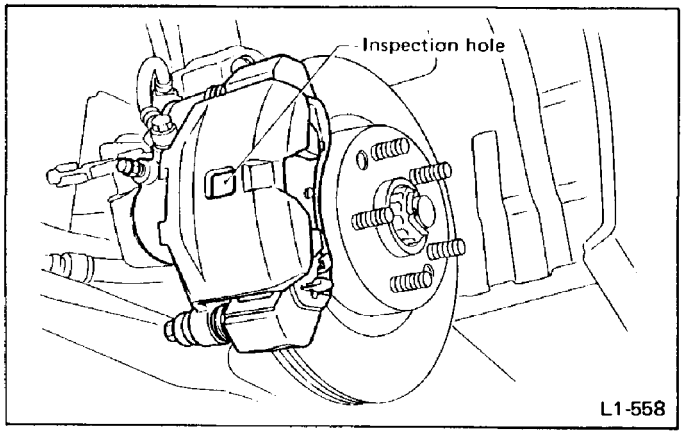

Fig. 40

Pad thickness including back metal:
Standard
18 mm (0.71 in)
Usable limit
7.5 mm (0.295 in)

a. Always replace the pads for both the left and right wheels at the same time.

b. A wear indicator is provided on the disc brake pad. If the pad wears down to such an extent that the end of the wear indicator contacts the disc rotor, a squeaking sound is produced as the wheel rotates. If this sound is heard, replace the pad.

2) Disc rotor

Check for wear and damage, and correct or replace if abnormal.

Disc rotor thickness:
Ventilated disc
Standard
Except XT6: 18 mm (0.71 in)
XT6: 22 mm (0.87 in)
Usable limit
Except XT6: 16 mm (0.63 in)
XT6: 20 mm (0.79 in)

3) Disc rotor runout

Disc rotor runout:
Limit
0.10 mm (0.0039 in)

INSTALLATION

1) It is necessary to push back piston into cylinder, since piston protrudes from cylinder in proportion to the amount of pad wear, and the gap where pads are to be inserted is narrow. Rotate piston clockwise with WRENCH (926430000) and SPACER (926440000) to force in piston to caliper body, and set the piston notch to the specified position.

When using WRENCH, fix SPACER as shown with 6 mm dia. bolts [length: less than 15 mm (0.59 in)].

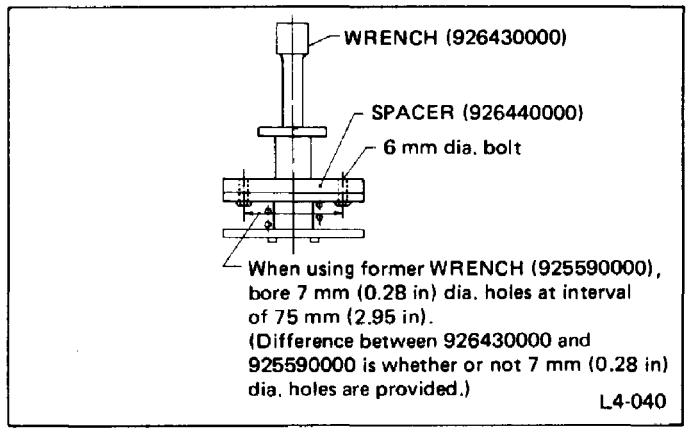

Fig. 41

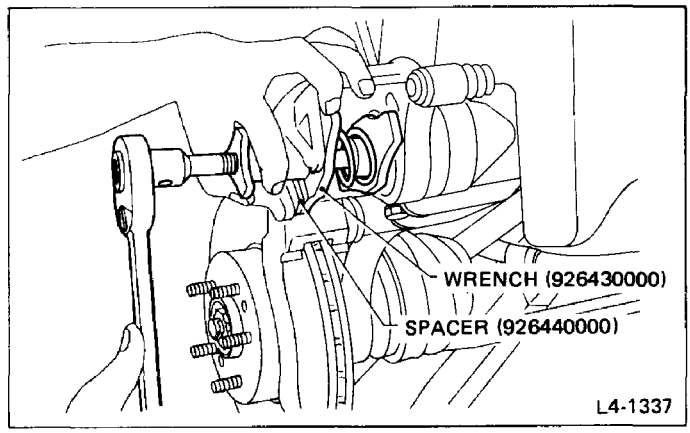

Fig. 42 Pushing back piston

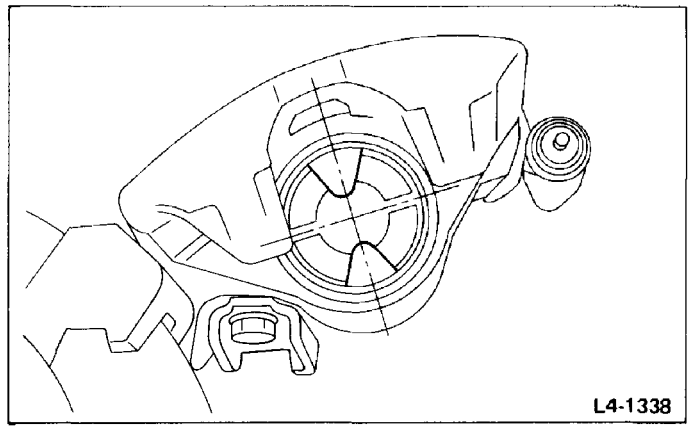

Fig. 43 Specified position of piston notch

After pushing back piston, check piston boot for twist. If twisted, correct twist using a strip driver.

a. Do not disconnect hose.
b. Always return the piston to that point which allows only a minimum clearance for the pad to be inserted.
c. Be sure to use the special tool when pushing in the piston to the caliper body. If the piston is pushed into the caliper body with a vice and without rotating it, the spindle (5-thread) may be buckled. To prevent this, the piston should be rotated clockwise when pushed into the caliper body.

2) Remove rust and foreign materials from the contact area of support with the sliding part of pad. Then, install a new genuine SUBARU pad. Make sure that pad clips are in normal operating condition before installing new pad.

a. Securely attach all pads to the frictional surfaces of their supports.
b. Apply thin coat of PBC GREASE (725191060 or 003603000) to the frictional portion between pad and pad clip.
c. Do not install shim on inner pad.
d. When replacing the pad, replace pads of the right and left wheels at the same time.

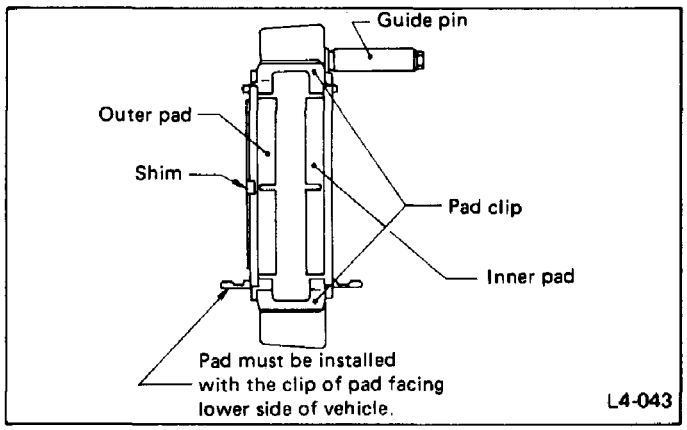

Fig. 44

3) Remove foreign materials from lock pin.
Tighten lock pin to the specified torque.

Torque (Lock pin):
31 – 41 N·m (3.2 – 4.2 kg-m, 23 – 30 ft-lb)

4) Upon completion of installing the brake system, confirm that the pad dowel (rise on pad back metal) fits into the piston notch.
Depress brake pedal several times.
5) Confirm that tire can be rotated with a force of less than 39 N (4 kg, 9 lb) at the outside diameter of tire.

(1) If wheel bearing is worn or disc rotor is not exactly perpendicular to the counterpart, the surface of disc rotor runs out in the axial direction during rotation. This causes disc rotor to be pressed against lining, and rotational resistance increases.
When such trouble occurs, measure the disc rotor runout. If the runout exceeds the limit, change the tightening position of rotor on hub or the meshing position of hub to axle shaft serration. If this does not correct the run-out, replace rotor.

Disc rotor runout:
Limit
0.10 mm (0.0039 in)

Measure the disc rotor runout at a point less than 5 mm (0.20 in) from the outer periphery of the rotor.

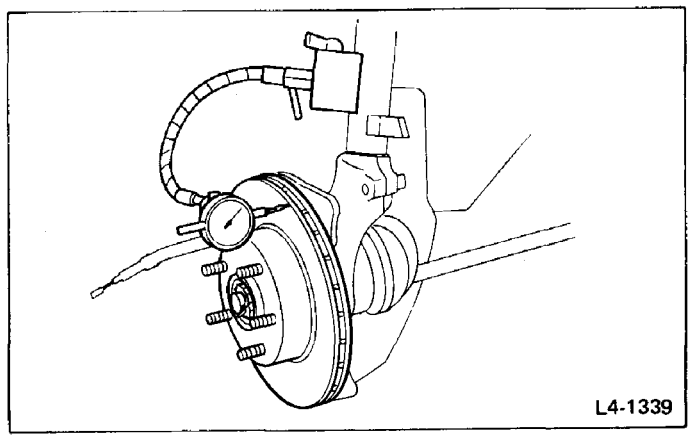

Fig. 45

(2) If the rotational resistance is over the specified value due to the other causes, recheck disc brake ASSY and repair or replace it if necessary.

Caliper Assembly

REMOVAL AND DISASSEMBLY

1) Remove union bolt and disconnect brake hose from caliper body ASSY.

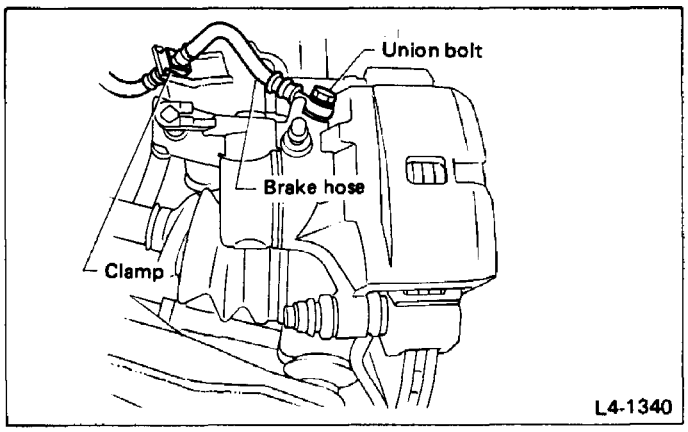

Fig. 46

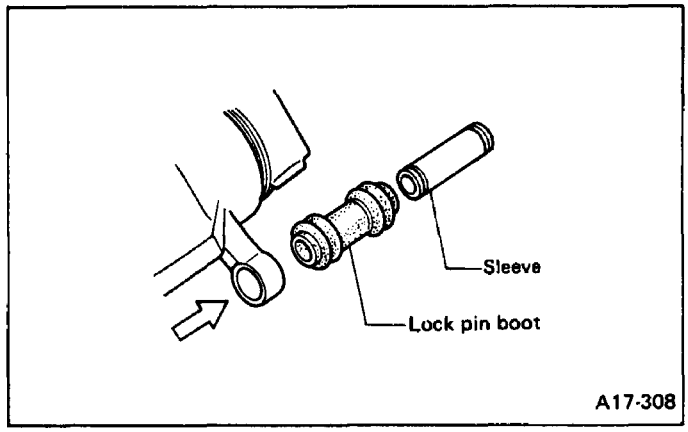

Fig. 48

2) Remove hand brake cable and pad in accordance with the removing procedure of pad.

3) Remove caliper body ASSY by pulling it out of support.

Do not remove guide pin unless it is damaged.

4) Remove support from housing.

The support should be removed only when the disc rotor or the support is replaced, and should not be removed when performing the maintenance of the caliper body ASSY.

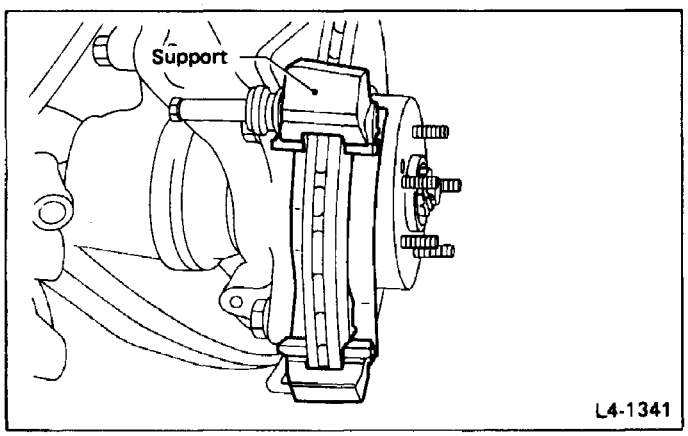

Fig. 47

5) Remove sludge and dirt from support and caliper body ASSY.

Take special care to prevent dirt from entering through the brake fluid inlet.

6) Remove sleeve, then remove lock pin boot, taking care not to scratch it.

7) Remove boot ring by using a strip driver with taking care so as not to scratch piston boot. Then, remove piston boot.

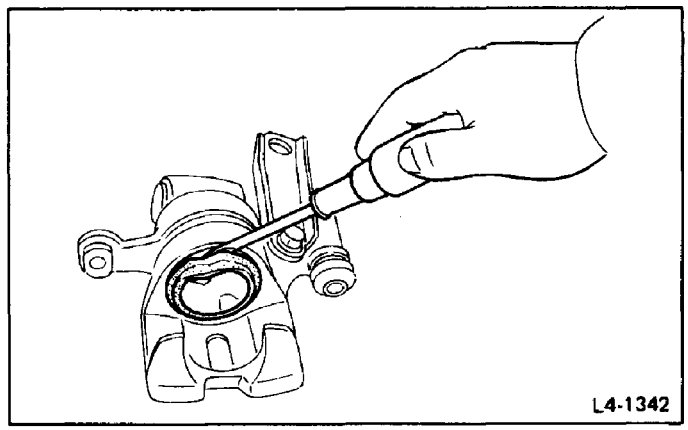

Fig. 49

If the strip driver is not available, use a screwdriver after the tip of the screwdriver is rounded off, and burrs are thoroughly eliminated.

8) Draw out piston from cylinder by applying a compressed air or pressurized liquid gradually from the brake fluid inlet of caliper body ASSY.

Do not apply an excessively high pressure, since such carelessness may cause the piston to spring out of the cylinder.

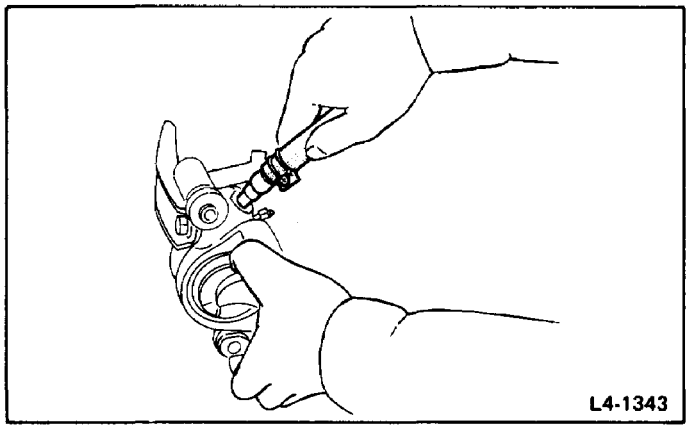

Fig. 50

9) Remove piston seal by using a strip driver with taking special care so as not to scratch the inner wall of cylinder.

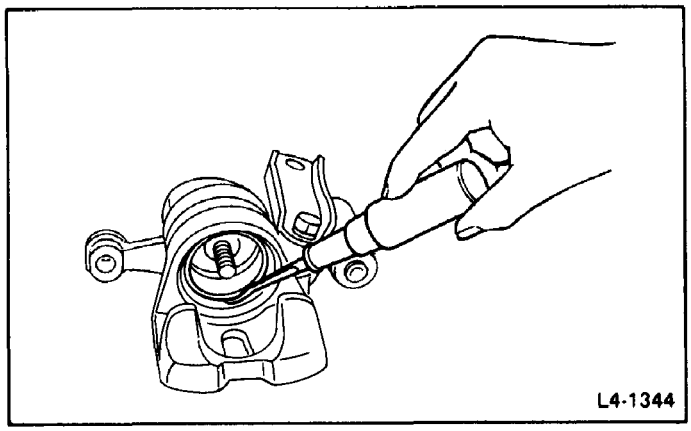

Fig. 51

10) Remove guide pin boot from caliper body.

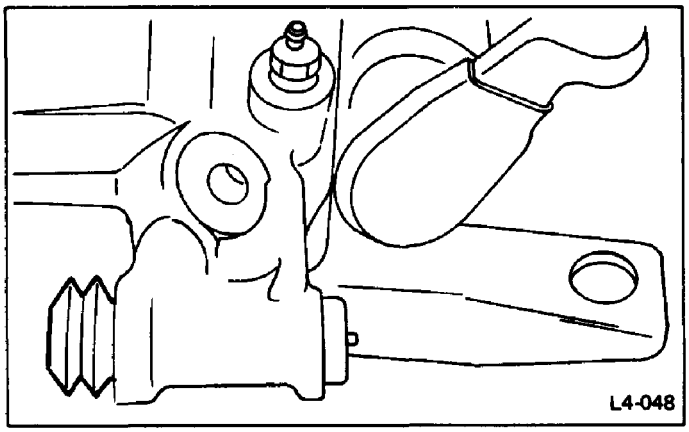

Fig. 52

Replace the removed boot with a new one.

11) Remove retainer and lever cap, then remove retaining spring from lever & spindle.

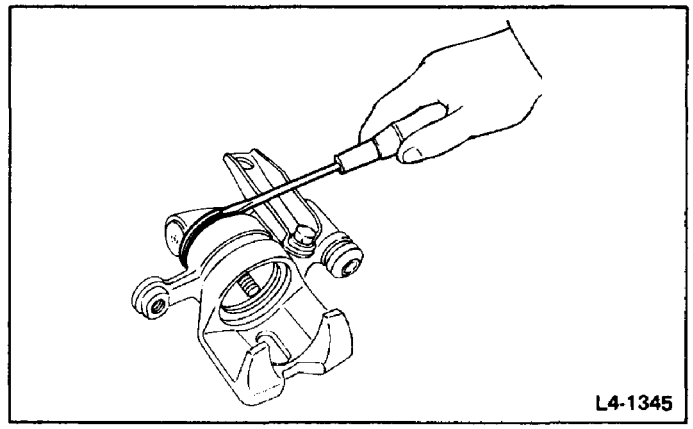

Fig. 53

The lever cap may only be pulled out of the groove in the caliper body.

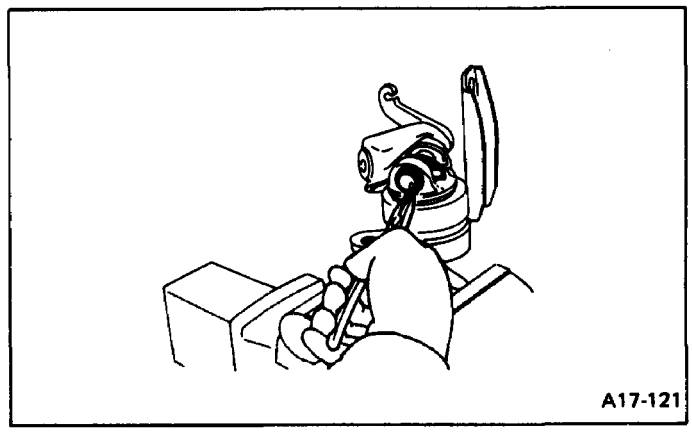

Fig. 54

12) Press spring washer (coned disc spring) with PULLER (925471000) to eliminate a load applied to lever & spindle through spring washer, pull out lever & spindle.
Detach PULLER, and then remove connecting link and return spring.

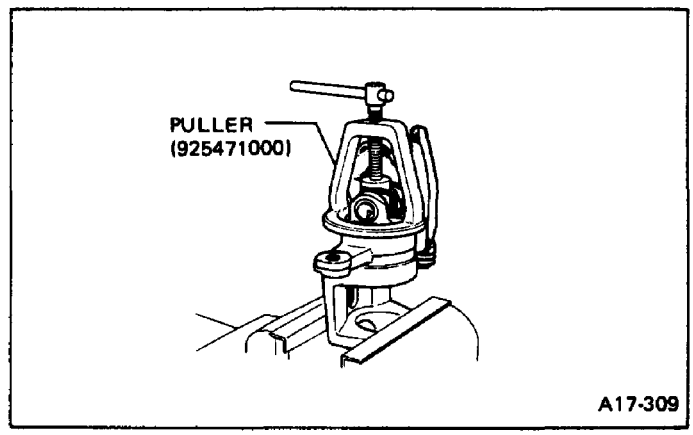

Fig. 55

INSPECTION

Inspect the disassembled parts, correct or replace if defective.
1) Caliper body
Uneven wear, damage or rust.
2) Piston
Uneven wear, damage or rust.
3) Rubber parts
Deformation, wear, damage, deterioration or coat of mineral oil.
4) Pad clip
Deformation, wear, damage or rust.
5) Spindle and cone spring
Damage or rust.
6) Lever & spindle
Damage or rust.
7) Support
Wear, damage or rust.
8) Other parts
Deformation, wear, damage or rust.

If the rubber parts are scratched or coated with mineral oil, replace it with a new one.

ASSEMBLY AND INSTALLATION

1) Clean the inner part of caliper body (cylinder) with brake fluid. Apply a thin coat of SILICON COMPOUND (725191050 or 003606010) to piston seal, and fit the seal to the groove provided in the cylinder with hand.

Pay special attention to prevent the seal from twisting.

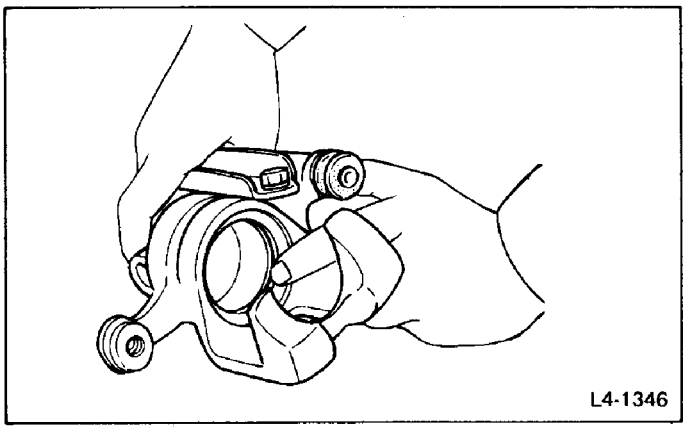

Fig. 56

2) Insert piston into cylinder.

Be sure to insert the piston into the cylinder with hand.
Do not use a vice when inserting the piston.

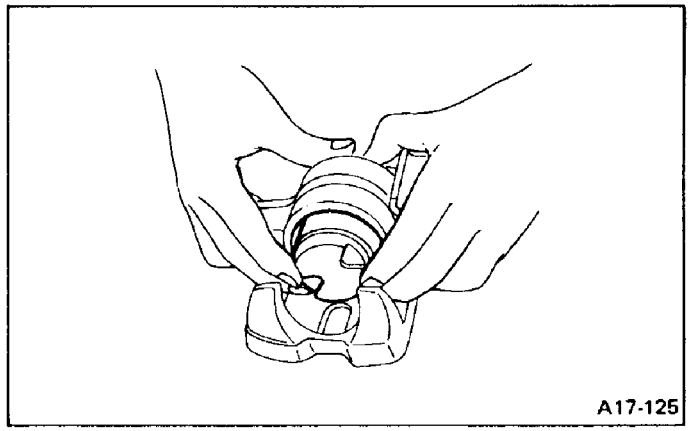

Fig. 57

3) Upon completion of inserting piston into cylinder, apply NIGLUBE RX-2 GREASE (725191040 or 003606000) into the grooves provided in cylinder and along the circumference of piston head. Then fit boot into the grooves. After confirming that boot is not twisted, attach boot ring.

When attaching the boot ring, refer to the figure.

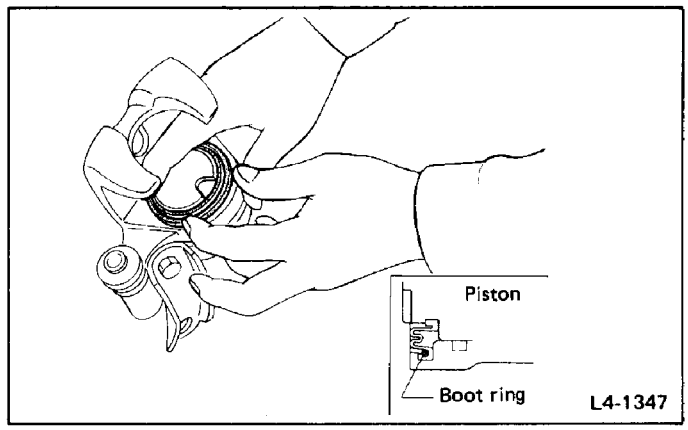

Fig. 58 Fitting piston boot and boot ring

4) Apply NIGLUBE RX-2 GREASE (725191040 or 003606000) to the cone springs fitting section of spindle, into the space between cone springs after fitting them, and onto the face of caliper body coming into contact with cone springs.
Apply a thin coat of SILICON COMPOUND (725191050 or 003606010) to the sealing section of caliper body coming into contact with O-ring of spindle ASSY.
Then, insert spindle ASSY into cylinder by turning clockwise from the opening at the bottom of caliper body.

Never fail to apply the specified grease or compound to the proper sections.

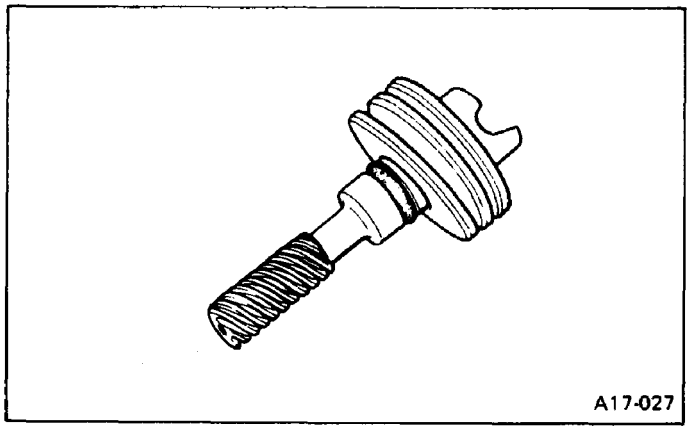

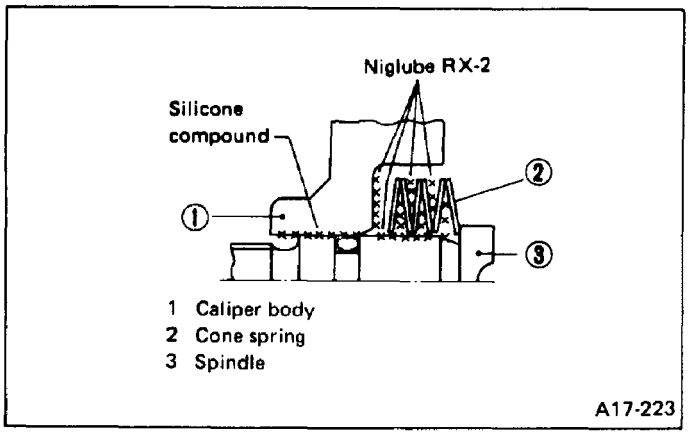

Fig. 59 Spindle ASSY and grease application

a. When the cone spring is replaced due to scratch, be sure to replace the O-ring with a new one. Also, attach a new cone spring before fitting the O-ring.
Six cone springs are incorporated. The assembling combination is as follows.

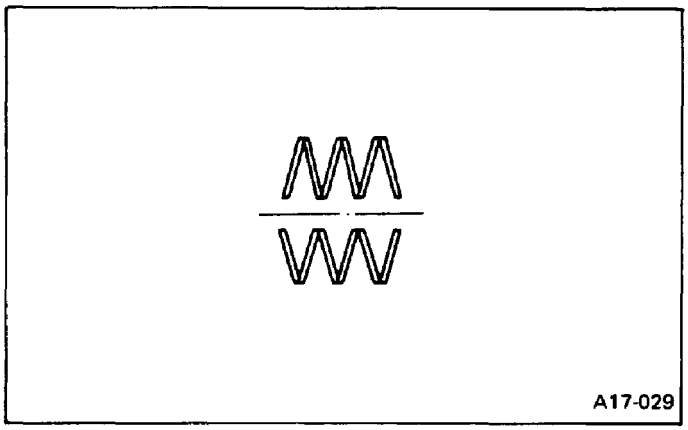

Fig. 60

b. After attaching cone springs, apply thin coat of SILICON COMPOUND (725191050 or 003606010) to the O-ring, and insert it with ADAPTER (925600000) with taking care to prevent the O-ring from being damaged.

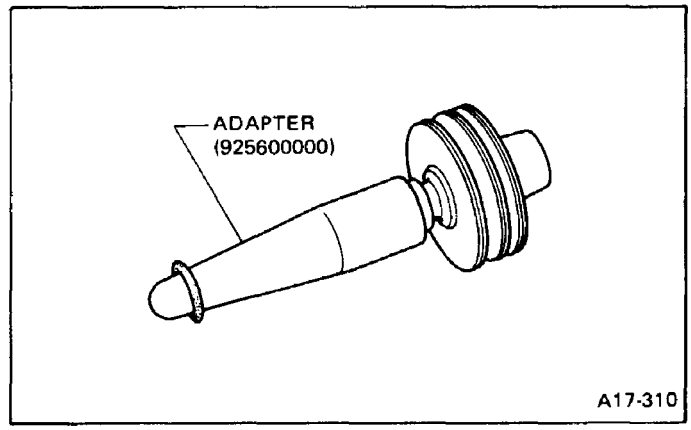

Fig. 61 Fitting O-ring

5) Apply NIGLUBE RX-2 GREASE (725191040 or 003606000) to the head of spindle ASSY and onto the inner wall of needle bearings on caliper body in which lever & spindle is to be fitted. After setting connecting link and return spring, press a set of cone springs by PULLER (925471000).
Apply NIGLUBE RX-2 GREASE (725191040 or 003606000) to grooves of lever & spindle in which lever cap and connecting link are to be fitted. Then, fit connecting link into the groove at the head of spindle. Insert lever & spindle provided with lever cap and garter spring. Be sure to force in the hooked portion of return spring to the groove of lever & spindle as shown. Then, remove PULLER (925471000).

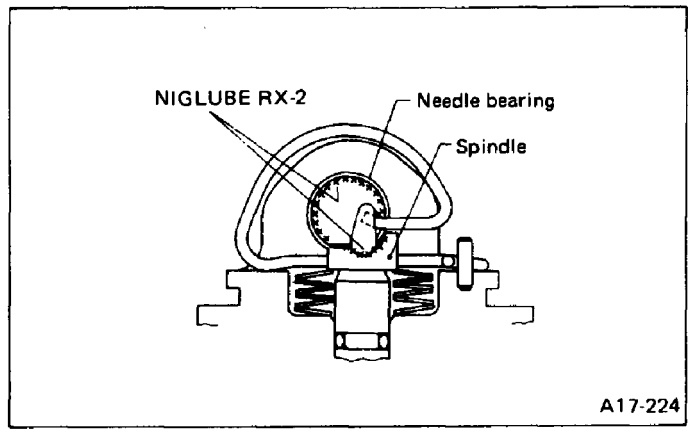

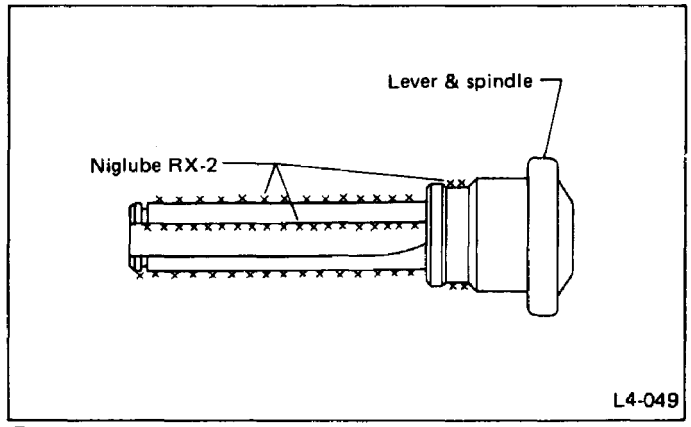

Fig. 62 Grease application

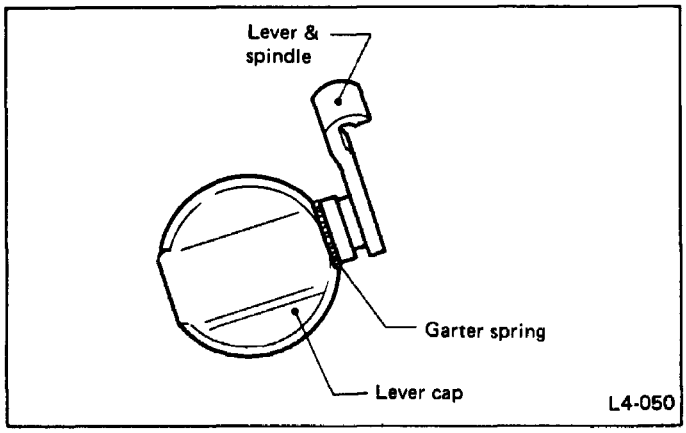

Fig. 63 Lever & spindle, lever cap and garter spring in ASSY

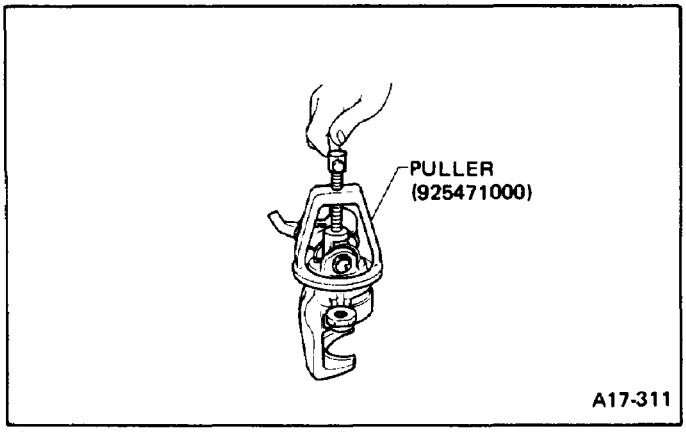

Fig. 64 Inserting lever & spindle

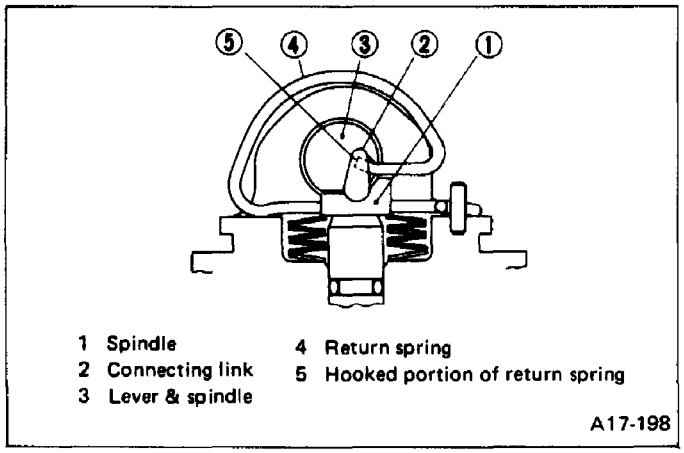

Fig. 65

When inserting the lever & spindle, make sure that the needle bearing of caliper body is clean and free from any foreign matter.

6) Fit retaining spring into the groove of lever & spindle.
Apply NIGLUBE RX-2 GREASE (725191040 or 003606000) to the groove of caliper body in which lever cap is to be fitted and to retaining spring.

Apply sufficient amount of NIGLUBE RX-2 GREASE (725191040 or 003606000) to the space around connecting link and lever & spindle so as to fill inside of lever cap after fitting it.
Fit lever cap properly into the groove at the rear of caliper body.
Attach retainer onto lever cap.

Be careful not to damage the lever cap by the edge of the retainer.

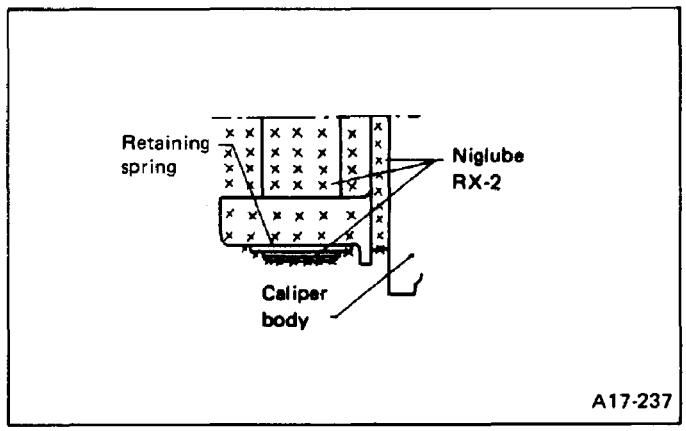

Fig. 66 Grease application

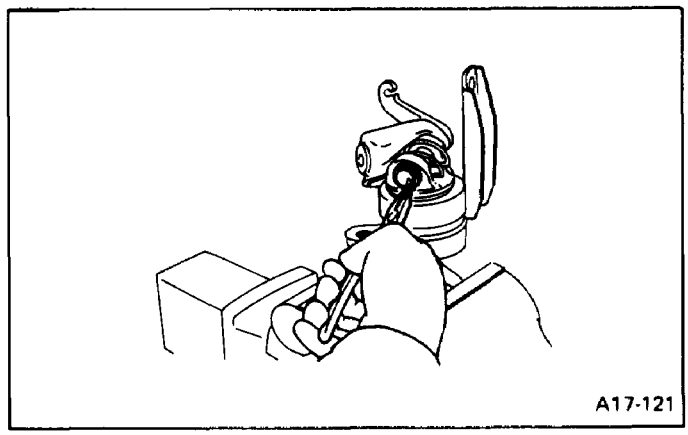

Fig. 67

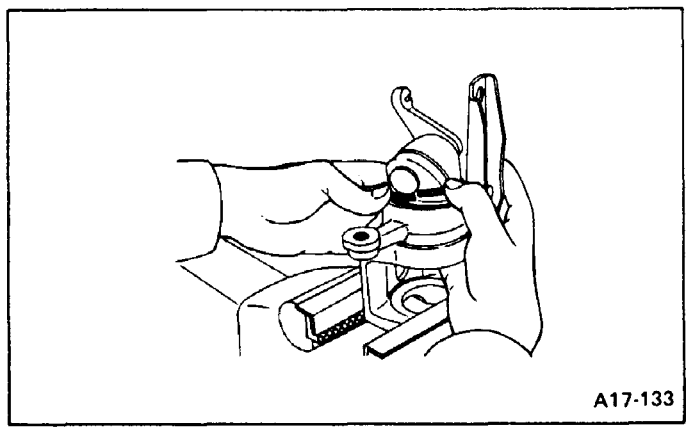

Fig. 68

7) Remove any foreign matter from the guide pin portion in caliper body. Fit guide pin boot. (Be careful not to scratch boot itself.)
After fitting, make sure that boot is not damaged.

Once the guide pin boot is removed, always replace it with a new one.

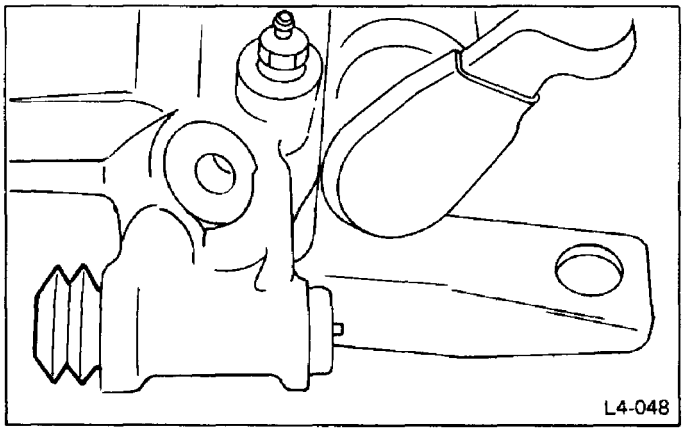

Fig. 69

8) Install lock pin boot to caliper body. Apply SILICON COMPOUND (725191050 or 003606010) to the inside (the sliding surface) of lock pin boot and to the boot-fitting grooves of sleeve. Then insert sleeve into lock pin boot.

Use new lock pin boot.

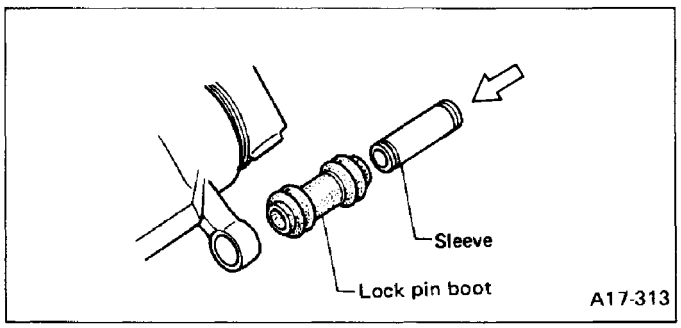

Fig. 70

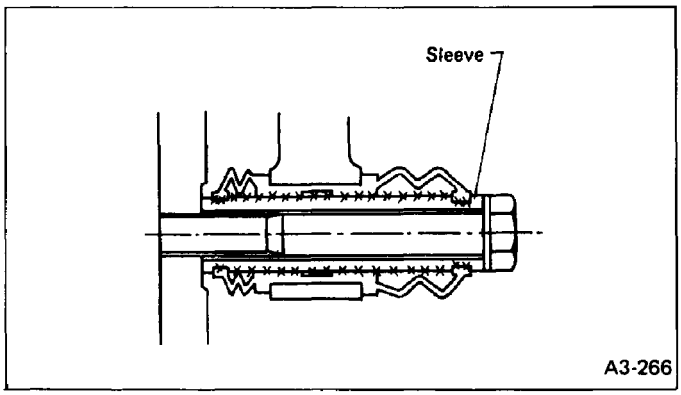

Fig. 71 Grease application to lock pin portion

9) Rotate piston until the notch at the head of piston is set to the specified position, and make sure that all parts are properly attached.
(For pushing back piston, refer to step 1) in "INSTALLATION" of "Replacement of Pad").
10) Install support to housing.

Torque (Support bolt):
49 – 69 N·m (5.0 – 7.0 kg-m, 36 – 51 ft-lb)

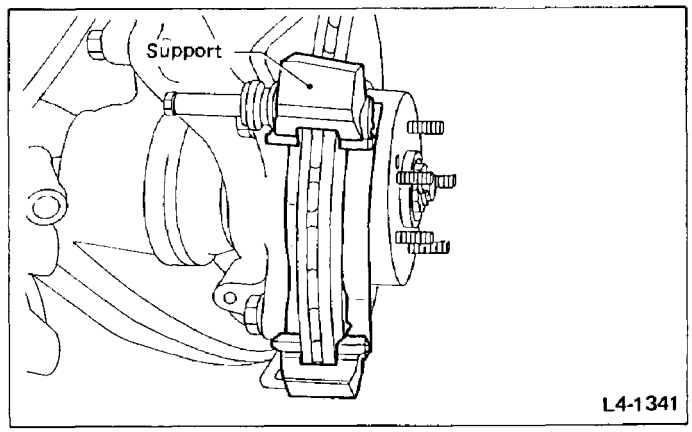

Fig. 72

11) Install pad clips properly.
12) Install outer pad and inner pad properly.

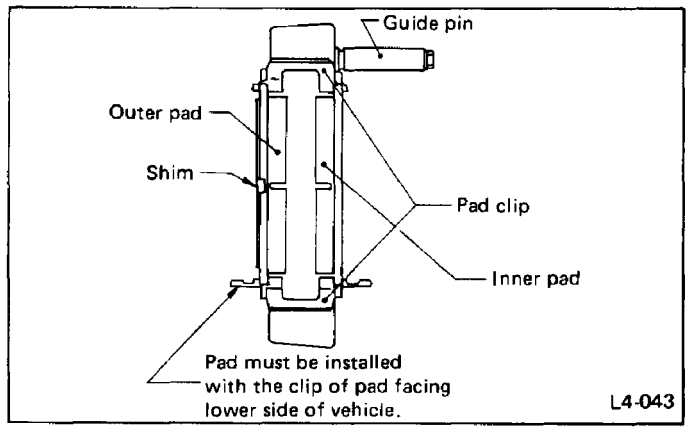

Fig. 73

13) Make sure that caliper body and support are properly coated with grease. Insert the support guide pin into the fitting hole in caliper body. Tighten lock pin to the specified torque.

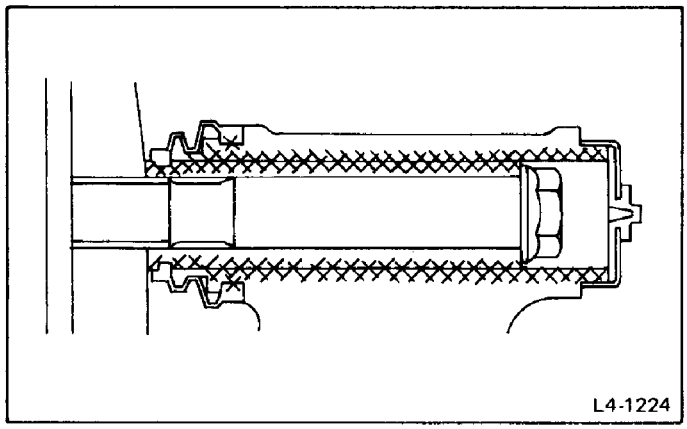

Fig. 74 Grease application to guide pin portion

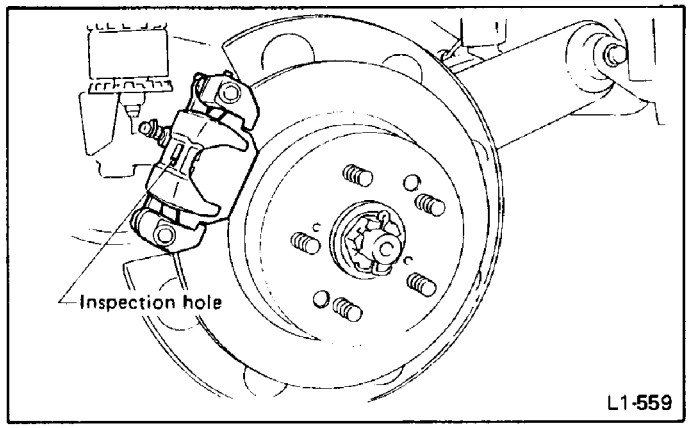

Fig. 75

Torque (Lock pin):
31 – 41 N·m (3.2 – 4.2 kg-m, 23 – 30 ft-lb)

a. Use only SILICON COMPOUND (725191050 or 003606010) grease for the guide pin and lock pin portions.
b. After assembling, make sure that boots are properly fitted in the grooves on the caliper body, guide pin sleeve and lock pin sleeve.
c. If the boot contains too much air and is expanded, press it to purge out some air.

14) Make sure that all parts are properly attached, then connect brake hose and hand brake cable.

Torque (Union bolt):
15 – 21 N·m (1.5 – 2.1 kg-m, 11 – 15 ft-lb)

Replace brake hose gaskets with new ones.

15) Bleed air from the brake system.

Torque (Air bleeder screw):
7 – 9 N·m (0.7 – 0.9 kg-m, 5.1 – 6.5 ft-lb)

Rear Disc Brake

Replacement of Pad

The thickness of the pad can be visually inspected from the inspection hole of the caliper body.

REMOVAL

1) Remove the lower of the two bolts securing the caliper body to the support. (The upper bolt does not need to be removed.)

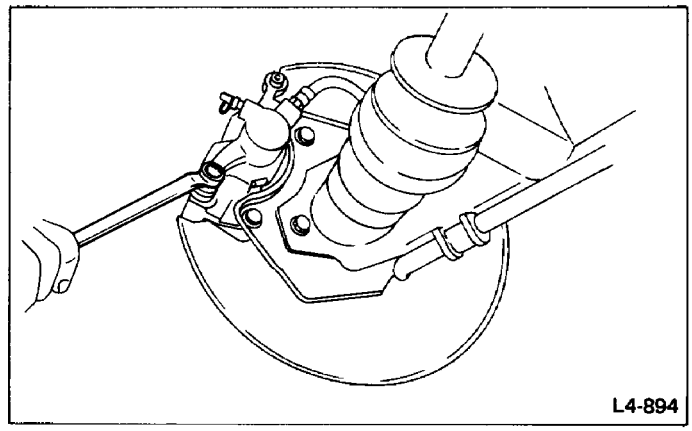

Fig. 76

2) Remove the pad and pad spring by turning up the caliper body using the upper pin as the pivot.

a. The brake pedal must not be depressed when the pad has been removed.
b. When replacing the pad, do not remove the caliper body, but just turn it enough for removal and installation.

INSPECTION

1) Inspection of pad
Check the pad thickness through the inspection hole and replace pads if not within specification.

Thickness of pad (including back metal):
Standard value
15.0 mm (0.591 in)
Service limit
Except XT6: 6.5 mm (0.256 in)
XT6: 8.0 mm (0.315 in)

Replace the pads of the right and left wheels at the same time. Also, replace the pad spring if deformed or strained.

2) Inspection of rotor
Check the rotor for wear and damage, and repair or replace if defective.

Thickness of rotor:
Standard value
10.0 mm (0.394 in)
Service limit
8.5 mm (0.335 in)

INSTALLATION

1) Clean the caliper body and piston end face, and push the piston in the caliper body.

When the piston is difficult to put in place, loosen the air bleeder, then push into place.

2) Install the pad spring taking care of its upper and lower sides. Then install the pad.

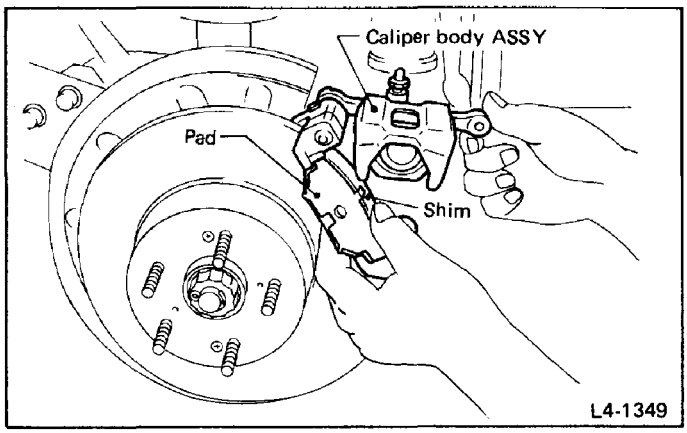

Fig. 77

3) Turn the caliper body back to the original position, and tighten the lower bolt.

Tightening torque:
22 – 31 N·m (2.2 – 3.2 kg-m, 16 – 23 ft-lb)

4) Depress the brake pedal several times with usual braking effort to adjust the relative position between the pad and rotor. Also, make sure that the pedal has a proper stroke.
5) Put back tires and rotate them several times. Then, wind a rope around the circumference of tire, and confirm that tire can be rotated with a force of less than 39 N (4 kg, 9 lb) at the outside diameter of tire.
If wheel bearing is worn or disc rotor is not exactly perpendicular to the counterpart, the surface of disc rotor runs out in the axial direction during rotation. This causes disc rotor to be pressed against lining, and rotational resistance increases.
When such trouble occurs, remove tire and measure the disc rotor runout. If the runout exceeds the limit, check the bearing and replace it if defective. If this does not correct the runout, replace rotor.

Disc rotor runout:
Limit
0.10 mm (0.0039 in)

Measure the disc rotor runout at a point less than 5 mm (0.20 in) from the outer periphery of the rotor.

Caliper Assembly

REMOVAL

1) Disconnect the brake hose from the caliper body.

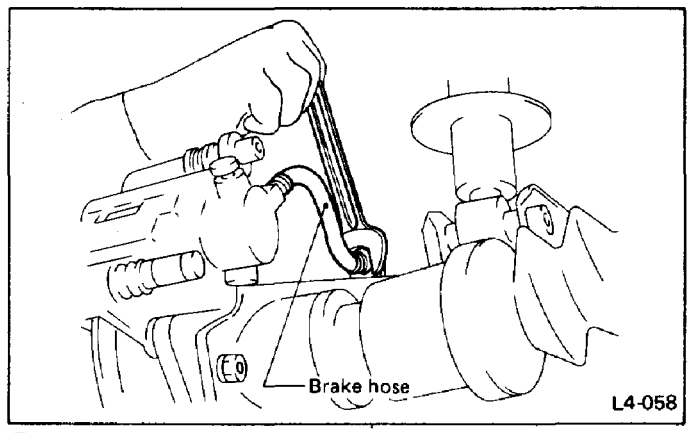

Fig. 78

2) Remove the caliper ASSY from trailing arm by loosening the mounting bolts.

DISASSEMBLY

1) Drain the brake fluid from the caliper body.
2) Remove the bolts and separate the support from the caliper body.
3) Pull out the pads and remove the pad springs.
4) Pull out the piston by blowing air into the caliper body.

Blow in air little by little to prevent the piston from jumping out.

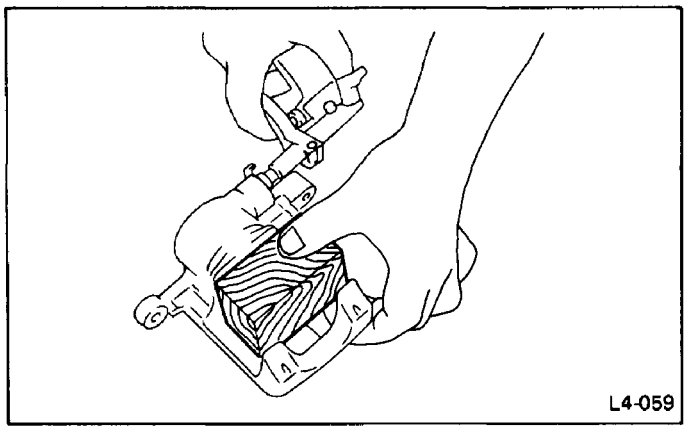

Fig. 79

5) After the piston has been removed, remove the boot and seal.
6) Remove the pins and boots from the support.

INSPECTION

Check all disassembled parts and replace if defective.
1) Check the inner wall of the cylinder for wear, rust and damage.
2) Check the support for wear, rust, cracks and other damage.

Rust and foreign material may be removed with a fine sandpaper. However, if they are excessive, replace the support.

3) Check the piston for wear, rust and damage.

Do not use sandpaper to clean the piston's surface, because it is plated.

4) Check the pin and pin boot for damage.

Be sure to replace the piston seal and piston boot each time the caliper ASSY is disassembled.

ASSEMBLY

a. When replacing piston seal, make sure of the sizes of piston and seal.
b. When replacing piston boot, make sure of the sizes of piston and boot.

	Piston	Piston boot	Seal
Effective cylinder diameter mm (in)		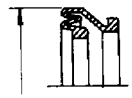	
30.23 (1.1902)	30.2 mm (1.189 in) dia.	41.5 mm (1.634 in) dia.	30.2 mm (1.189 in) dia.

L4-1125

Fig. 80

1) Wash the inner wall of the cylinder with brake fluid. Then apply a small amount of SILICON COMPOUND (725191050 or 003606010) to the piston seal and fit it into the seal groove of the cylinder by hand.

Be careful not to twist the seal when fitting.

2) Apply brake fluid to piston.
3) Apply NIGLUBE RX-2 GREASE (725191040 or 003606000) to the inner surface of piston boot.
4) Install the piston and piston boot to the caliper body. When doing this work, put the piston boot on the piston end in advance and fit the boot into the boot groove of the caliper body, as shown in figure.

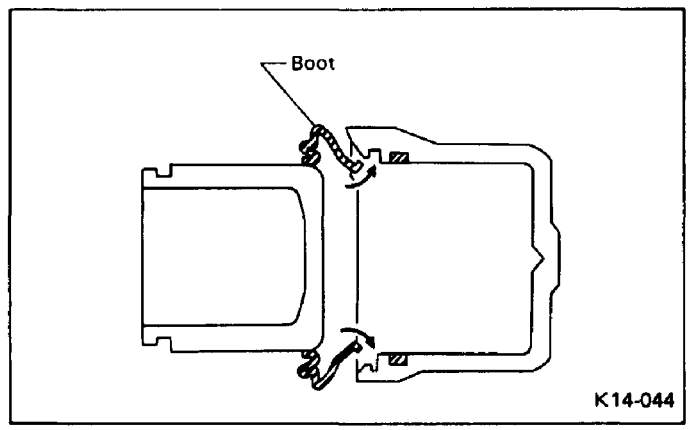

Fig. 81

5) Slowly put the piston into the caliper body, and fit the piston boot into the undercut of the piston just before the piston is completely inserted.

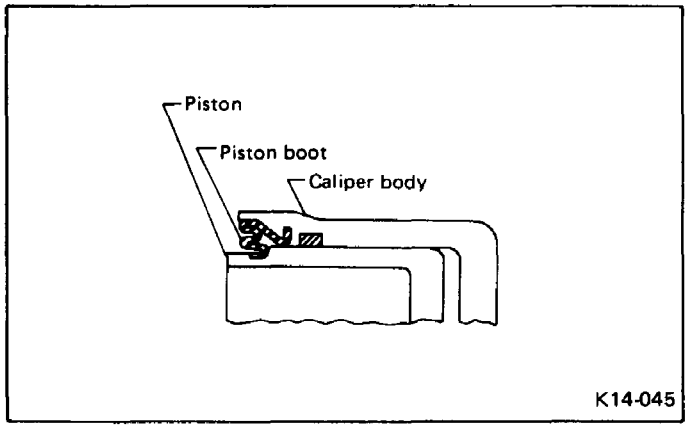

Fig. 82

6) Uniformly apply NIGLUBE RX-2 GREASE (725191040 or 003606000) to the whole sliding surface of the pin, and boot-fitting undercuts of the pin and the support. Then install the boot and pin to the support.

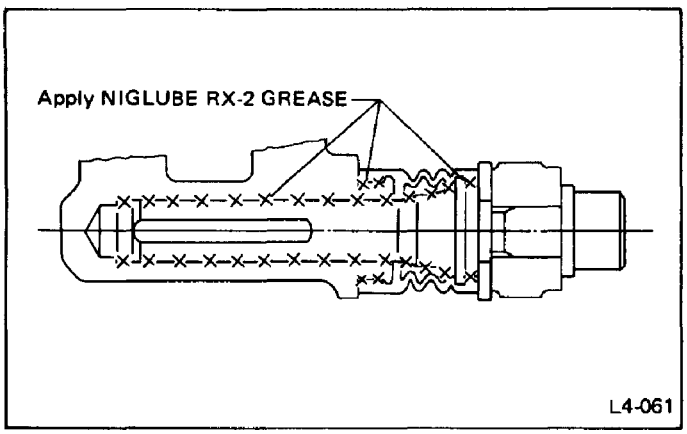

Fig. 83

7) Install the pad, and pad spring to the support. (Refer to sub-section, "Replacement of pad.")

After installing the pad, make sure that the pad is held down by spring force.

8) Install the support to caliper body.

INSTALLATION

1) Install caliper ASSY to trailing arm with bolts.

Bolt tightening torque:
46 – 58 N·m (4.7 – 5.9 kg-m, 34 – 43 ft-lb)

2) Connect the brake hose and bleed out air.

Tightening torque:
Brake hose
16 – 20 N·m (1.6 – 2.0 kg-m, 12 – 14 ft-lb)
Bleeder screw
7 – 9 N·m (0.7 – 0.9 kg-m, 5.1 – 6.5 ft-lb)

The brake hose must be connected without any twist.

3) After the installation is completed, depress the brake pedal several times to see that the braking system is not leaking any fluid.

Rear Drum Brake (1800 cc FWD model)

REMOVAL

1) Remove brake drum, referring to chapter "WHEELS AND AXLES".
2) Unscrew brake pipe flare nut and disconnect brake pipe.

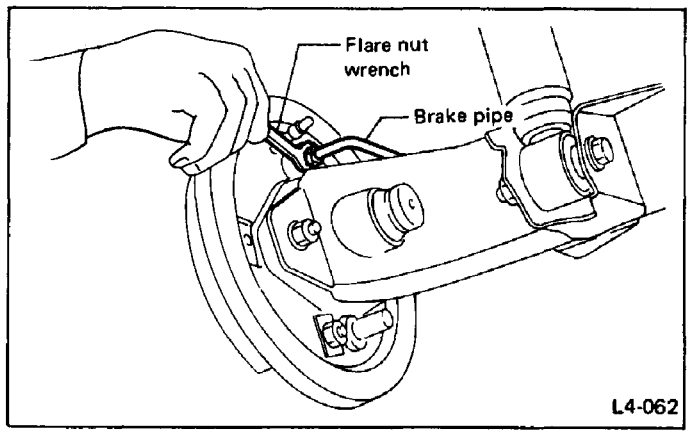

Fig. 84

3) Unscrew back plate installing bolts and remove brake ASSY. Take care so that spindle shaft and bearing are free from dust.

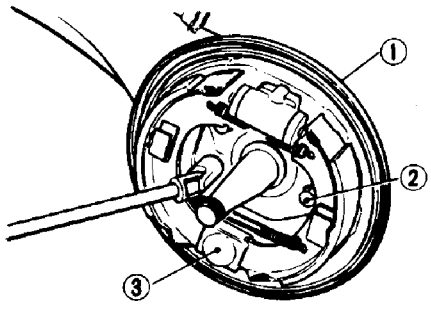

1 Back plate
2 Back plate installing bolt
3 Adjuster A17-351

Fig. 85

4) Remove shoe hold down spring with pliers.
5) Pull out shoe on anchor side.
6) Pull out shoe on cylinder side.

INSPECTION

Check the disassembled parts. Correct or replace if defective.
1) If the inside surface of brake drum is streaked, correct the surface. If it is unevenly worn, taperingly streaked, or the outside surface of brake drum is damaged, correct or replace it.

Drum inner diameter:
Standard
180 mm (7.09 in)
Service limit
182 mm (7.17 in)

2) Measure the lining thickness. If it exceeds the limit, replace shoe ASSY.

Lining thickness:
Standard
4.5 mm (0.177 in)
Service limit
1.5 mm (0.059 in)

Replace the leading and trailing shoes on the right and left brake ASSY at the same time.

3) If the deformation or wear of back plate, shoe, etc. are notable, replace them.
4) When the shoe return spring tension is excessively weakened, replace it, taking care to identify upper and lower springs.
5) If grease has leaked from brake drum, replace oil seal or drum.
6) If drum bearing is abnormal or loose, replace it.
7) Strut ASSY (4WD only)
(1) Improper operation (due to worn meshing tooth surface or rust etc.) or damage.
(2) Wear on brake shoe contacting portion.

Never disassemble strut ASSY.

INSTALLATION (FWD)

1) Clean back plate and wheel cylinder.
2) Assemble shoe ASSY with springs. Pay attention to the shape and installing position of springs.

	Upper	Lower
Wire diameter	Thin	Thick
Installing position	On wheel cylinder and brake drum side.	On anchor and brake drum side.

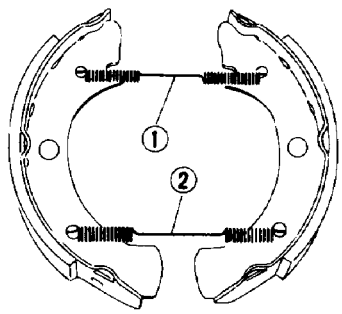

1 Upper return spring
2 Lower return spring A17-352

Fig. 86

3) Apply brake grease to the portions shown by arrows in figure.

Brake grease:
Dow Corning Molykote No. 7439 (P/N 725191460)

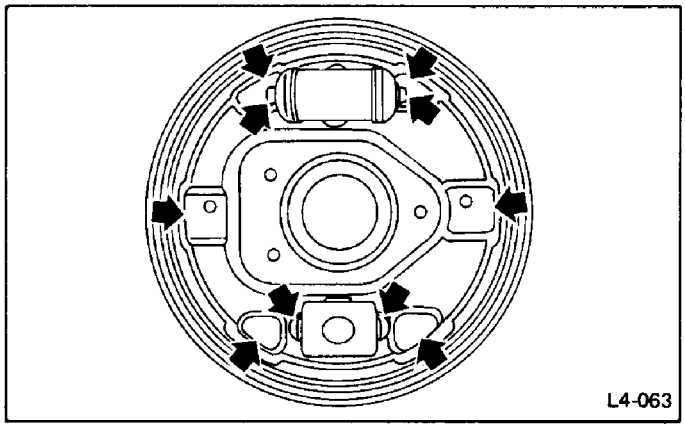

Fig. 87

4) Fit shoe ASSY first to wheel cylinder, then to anchor, and secure both shoes with shoe hold down springs.
5) Adjust the shoe diameter to about 179.8 mm (7.08 in) by turning the wedge. Measure the shoe diameter at three positions, upper, middle, and lower position.
6) Tighten temporarily brake pipe flare nut.
7) Fit spacer (seal) onto spindle and install back plate. In this case, center by using the outer circumference of spacer as a faucet joint. Insert three bolts from the back plate side.

Torque (Back plate):
46 – 58 N·m (4.7 – 5.9 kg-m, 34 – 43 ft-lb)

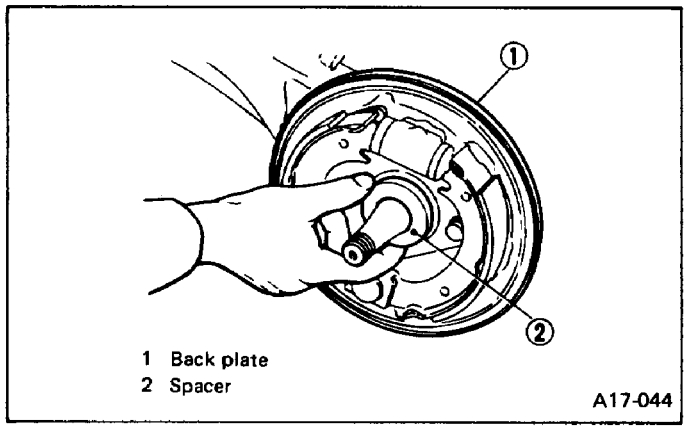

Fig. 88

Do not allow foreign matters to enter the brake ASSY.

8) Tighten brake pipe flare nut to the specified torque.

Torque:
13 – 18 N·m (1.3 – 1.8 kg-m, 9 – 13 ft-lb)

9) Install brake drum in parallel with brake ASSY.
10) Bleed air from the brake system.

Torque (Air bleeder screw):
7 – 9 N·m (0.7 – 0.9 kg-m, 5.1 – 6.5 ft-lb)

CLEARANCE ADJUSTMENT (FWD)

The adjusting mechanism for the brake lining clearance is of a manual type.
Follow the undermentioned procedure.
1) Jack up vehicle body to release wheel from the ground.
2) Tighten the wedge fully until wheel ceases to rotate. Screwing up the wedge forces anchor to expand on either side by the wedge action and consequently shoes stick to drum.
3) Turn back the wedge for 180°, and the shoe clearance will be 0.1 to 0.15 mm (0.004 to 0.0059 in).
4) Be sure that tire and wheel can be rotated easily by hand.

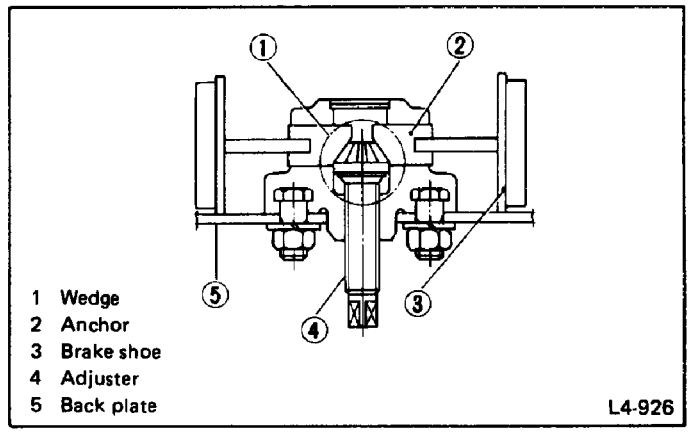

Fig. 89 Adjusting mechanism

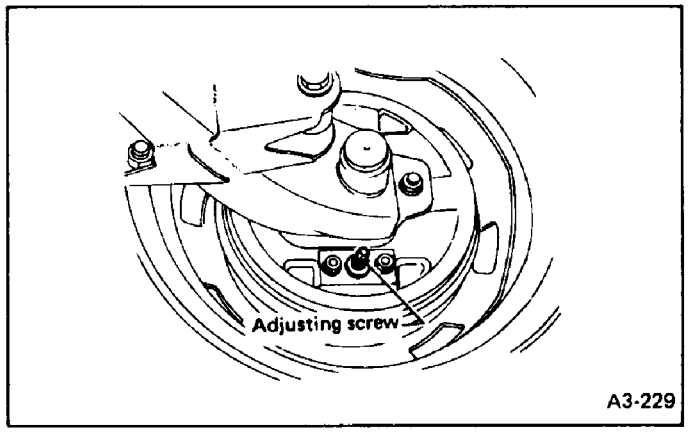

Fig. 90 Adjusting shoe clearance

Wheel Cylinder

DISASSEMBLY

1) Remove boot from cylinder.
2) Take out piston, which is piston ASSY with cup.

a. Wheel cylinder can be disassembled and inspected with it mounted on the back plate. Therefore it should not be removed except replacing the wheel cylinder ASSY etc.
b. When removing the cup from piston, be careful not to damage piston. And be sure to use the new cup.

INSPECTION

Inspect each parts after washing them with brake fluid, and replace if the following defects are found.

Do not use any cleaning solvent other than brake fluid.

1) Cup: Damage, fatigue or wear.
2) Cylinder and piston frictional surfaces: damage, uneven wear, corrosion or rust.
3) Spring: Rust or damage.
4) Boot: Damage.

ASSEMBLY

1) Assembly is the reverse order of disassembly.

a. When installing the cup, use the special tool ADAPTER, apply brake fluid to the frictional surface for smooth installation and pay attention to cup direction.
b. When replacing the repair kit, make sure that the sizes of cylinder and cup are the same as those which were replaced.
c. Special tools (ADAPTERs) are available in different sizes. Use only the tool of the correct size.

ADAPTER	
Part No.	Applicable size
925460000	17.46 mm (11/16 in)

d. While assembling, be careful to prevent any metal chip, dust or dirt from entering the wheel cylinder.

2) Apply rubber grease to the boot inside as shown in figure.

NIGLUBE RX-2 GREASE (P/N 003606000)

Never use brake grease.

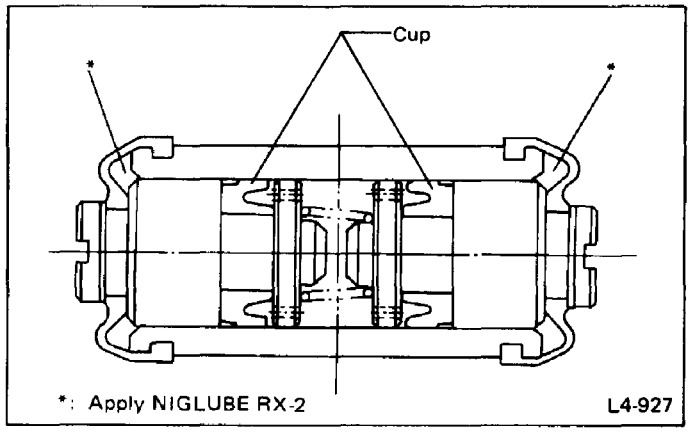

Fig. 91

Master Cylinder

REMOVAL

1) Thoroughly drain brake fluid from reservoir tank.
2) Disconnect fluid level indicator harness connector.
3) Remove brake pipes from master cylinder.
4) Remove master cylinder mounting nuts, and take out master cylinder from brake booster.

Do not let brake fluid remain on a painted surface. Wash off it immediately.

DISASSEMBLY

PRECAUTIONS FOR DISASSEMBLY

1) Remove mud and dirt from the surface of brake master cylinder.
2) Prepare tools necessary for disassembly operation, and arrange them neatly on work bench.
3) Clean work bench.
4) Tools for disassembly operation:
   - Phillips screwdriver 1
   - C-ring pliers 1

DISASSEMBLY PROCEDURE

1) Remove C-ring with C-ring pliers pushing in primary piston slightly.

Piston may jump out from master cylinder.

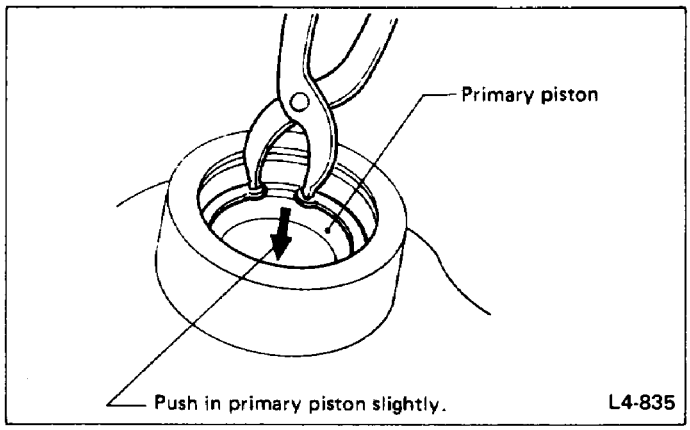

Fig. 92

2) Extract primary piston CP and secondary piston CP.

a. Do not disassemble the piston CP; otherwise, the spring set value may be changed.
b. Use brake fluid or methanol to wash inside wall of cylinder, pistons and piston cups. Be careful not to damage parts when washing. If methanol is used for washing, do not dip rubber parts, such as piston cups, in it for more than 30 seconds; otherwise, they may become swelled.

INSPECTION

If any damage, deformation, wear, swelling, rust, and other faults are found on the primary piston CP, secondary piston CP, secondary piston stopper, or gasket, replace the faulty part.

a. The primary and secondary pistons must be replaced as complete assemblies.
b. The service limit of the clearance between each piston and the master cylinder inner dia. is 0.11 mm (0.0043 in).
c. When handling parts, be extremely careful not to damage or scratch the parts, or let any foreign matter get on them.

ASSEMBLY

PRECAUTIONS FOR ASSEMBLING

1) When assembling, be sure to use recommended brake fluid.
2) Ensure that the inside wall of cylinder, pistons, and piston cups are free from dirt when assembling.
3) Be extremely careful not to damage, scratch, or dent cylinder inside wall, pistons, and piston cups.
4) Do not drop parts. Never attempt to use any part that has been dropped accidentally.

ASSEMBLING OPERATION

1) Assembling piston CP:
Apply recommended brake fluid to inside wall of cylinder, and to outer surface of piston CP, and install piston CPs carefully into cylinder.
2) Assembling C-ring:
With primary piston pushed in slightly, attach C-ring by using C-ring pliers.

After assembling, ensure that the C-ring is fitted securely in the ring groove.

INSTALLATION

To install the master cylinder to the body, reverse the sequence of removal procedure.

Tightening torque:
Master cylinder mounting nut
10 – 18 N·m (1.0 – 1.8 kg-m, 7 – 13 ft-lb)
Piping flare nut
13 – 18 N·m (1.3 – 1.8 kg-m, 9 – 13 ft-lb)

Be sure to use recommended brake fluid.

Brake Booster

REMOVAL

1) Remove the following parts at engine compartment.
   (1) Disconnect connector for brake fluid level indicator.
   (2) Remove brake pipes from master cylinder.
   (3) Remove master cylinder installing nuts.
   (4) Disconnect vacuum hose from brake booster.
2) Remove the following parts from the pedal bracket.
   (1) Snap pin and clevis pin.
   (2) Four brake booster installing nuts.
3) Remove brake booster while shunning brake pipes.

INSTALLATION

1) Mount brake booster in position.

Torque (Brake booster to toe board):
13 – 23 N·m (1.3 – 2.3 kg-m, 9 – 17 ft-lb)

2) Connect operating rod to brake pedal with clevis pin and snap pin.

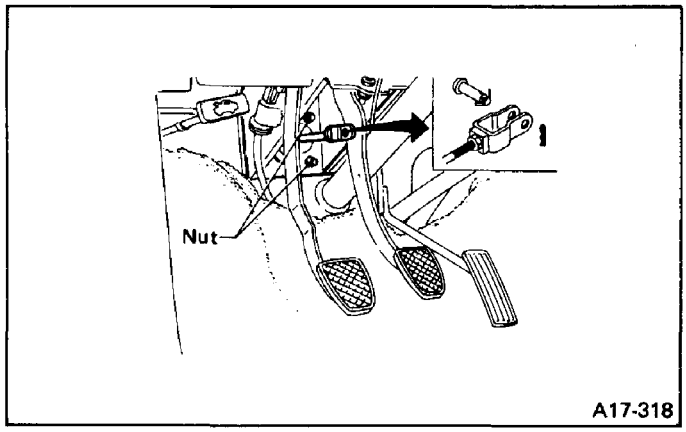

Fig. 93

3) Connect vacuum hose to brake booster.
4) Mount master cylinder onto brake booster.

Torque (Nut):
10 – 18 N·m (1.0 – 1.8 kg-m, 7 – 13 ft-lb)

5) Connect brake pipes to master cylinder.

Torque (Brake pipe flare nut):
13 – 18 N·m (1.3 – 1.8 kg-m, 9 – 13 ft-lb)

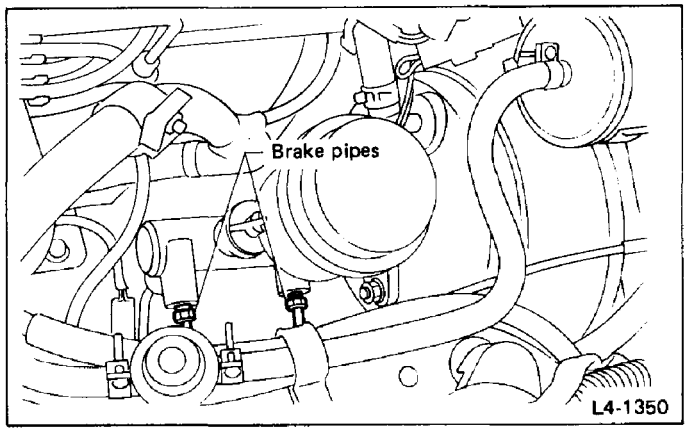

Fig. 94

6) Connect electric connector for brake fluid level indicator.
7) Adjust operating rod of brake booster as follows:
(1) Be sure engine is off. (No vacuum is applied to brake booster.)
(2) There should be play between brake booster clevis and pin at brake pedal installing portion.
(Depress brake pedal pad with a force of less than 10 N [1 kg, 2 lb] to a stroke of 0.5 to 2.5 mm [0.020 to 0.098 in].)

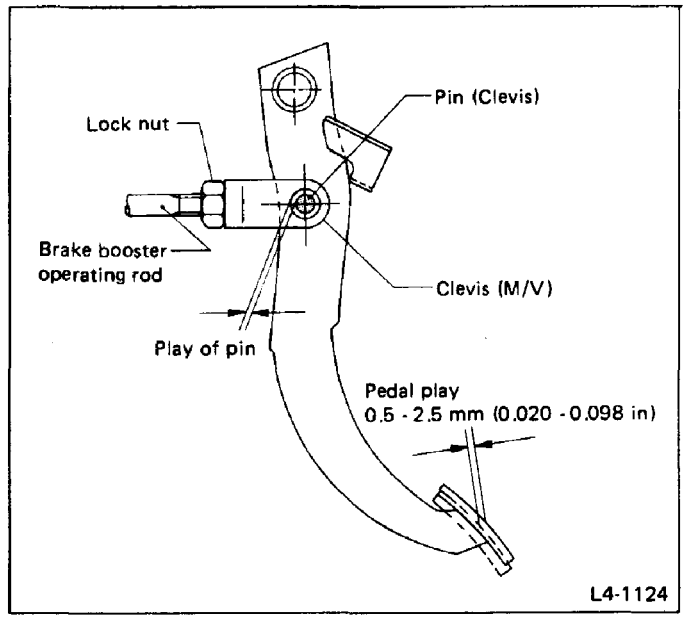

Fig. 95

(3) Depress the surface of brake pad by hand.
(4) If there is no free play between clevis pin and clevis, loosen lock nut for operating rod and adjust operating rod by turning in the direction that shortens it.

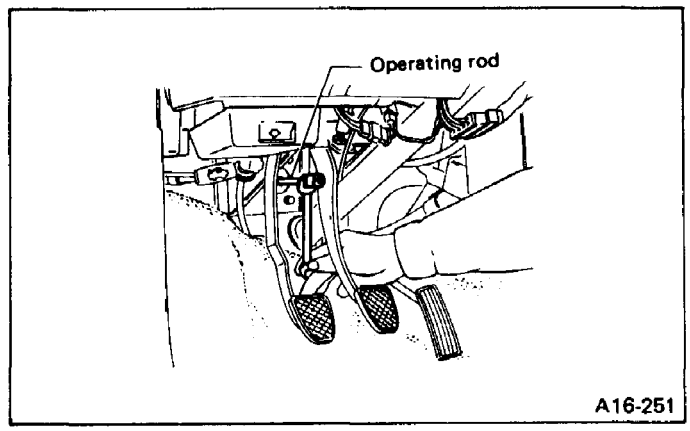

Fig. 96 Tightening lock nut on operating rod ASSY

8) Bleed air from brake system.

Torque (Air bleeder screw):
7 – 9 N·m (0.7 – 0.9 kg-m, 5.1 – 6.5 ft-lb)

9) Conduct road tests to ensure brakes do not drag.

OPERATION CHECK

When checking operation, be sure to securely apply the hand brake.

CHECKING WITHOUT USING GAUGES

This method cannot determine the exact portion which has failed, but it can provide a rough understanding of the nature of the failure if checking is conducted in accordance with the following procedure.

Air tightness check

Start engine, and run it for 1 to 2 minutes, then turn it off. Depress brake pedal several times applying the same pedal force as that used in ordinary braking operations. The pedal stroke should be greatest on the 1st depression, and it should become smaller with each successive depression. If no change occurs in the pedal height while in a depressed state, brake booster is faulty.

In the event of defective operation, inspect the condition of the check valve and vacuum hose. Replace them if faulty and conduct the test again. If no improvement is observed, check precisely with gauges.

Operation check

1) With engine off, depress brake pedal several times applying the same pedal force and make sure that the pedal height does not vary with each depression of the pedal.
2) With brake pedal depressed, start engine.
3) As engine starts, brake pedal should move slightly toward the floor. If no change occurs in the pedal height, brake booster is faulty.

If faulty, check precisely with gauges.

Loaded air tightness check

Depress brake pedal while engine is running, and turn off engine while the pedal is still depressed. Keep the pedal depressed for 30 seconds; if no change occurs in the pedal height, brake booster is functioning normally; if the pedal height increases, it is faulty.

If faulty, check precisely with gauges.

CHECKING WITH GAUGES

Connect gauges as shown in figure. After bleeding air from pressure gauges, proceed to each check.

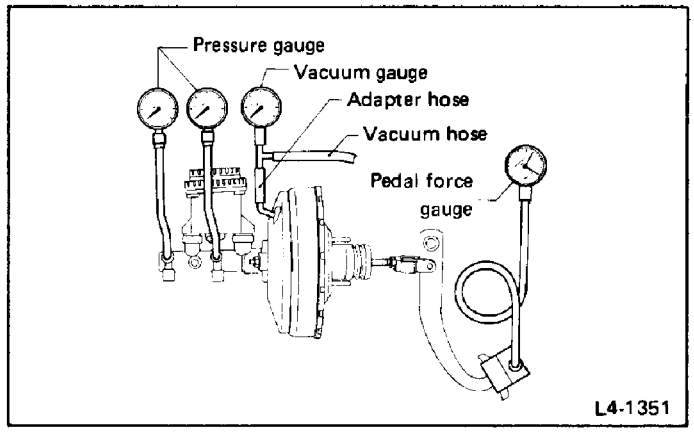

Fig. 97

Air tightness check

1) Start engine and keep it running until a vacuum of 66.7 kPa (500 mmHg, 19.69 inHg) is indicated on vacuum gauge. Do not depress brake pedal.
2) Stop engine and watch the gauge. If the vacuum drop range is less than 3.3 kPa (25 mmHg, 0.98 inHg) within 15 seconds after stopping engine, brake booster is functioning properly.
If defective, the cause may be one of those listed below.

- Check valve malfunction
- Leak from vacuum hose
- Leak from the shell jointed portion or stud bolt welded portion
- Damaged diaphragm
- Leak from valve body seal and bearing portion
- Leak from plate & seal ASSY portion
- Leak from poppet valve ASSY portion

Loaded air tightness check

1) Start engine and depress brake pedal with pedal force of 196 N (20 kg, 44 lb). Keep engine running until a vacuum of 66.7 kPa (500 mmHg, 19.69 inHg) is indicated on vacuum gauge while the pedal is still depressed.
2) Stop engine and watch vacuum gauge.
If the vacuum drop range is less than 3.3 kPa (25 mmHg, 0.98 inHg) within 15 seconds after stopping engine, brake booster is functioning properly.
If defective, refer to "Air tightness check" described above.

Lack of boosting action check

Turn off engine, and set the vacuum gauge reading at "0". Then, check the fluid pressure when brake pedal is depressed. The pressure must be greater than the standard value listed below.

Pedal force N (kg, lb)	Fluid pressure kPa (kg/cm², psi)
147 (15, 33)	392 (4, 57)
294 (30, 66)	Except XT6: 2,452 (25, 356) XT6: 1,569 (16, 228)

Boosting action check

Set the vacuum gauge reading at 66.7 kPa (500 mmHg, 19.69 inHg) by running engine. Then, check the fluid pressure when brake pedal is depressed. The pressure must be greater than the standard value listed below.

Pedal force N (kg, lb)	Fluid pressure kPa (kg/cm², psi)
147 (15, 33)	Except XT6: 4,904 (50, 711) XT6: 5,394 (55, 782)
294 (30, 66)	Except XT6: 6,375 (65, 924) XT6: 9,317 (95, 1,351)

HANDLING PRECAUTIONS

1) After protector has been removed from push-rod, do not turn the master cylinder side of brake booster downwards.
   (1) If the master cylinder side is turned downwards, push-rod may come loose by virtue of its own weight, and reaction disc may drop into brake booster.
   (2) Whether or not reaction disc has dropped can be determined by measuring the dimension "L".
   The projected amount "L" of pushrod should be as follows:

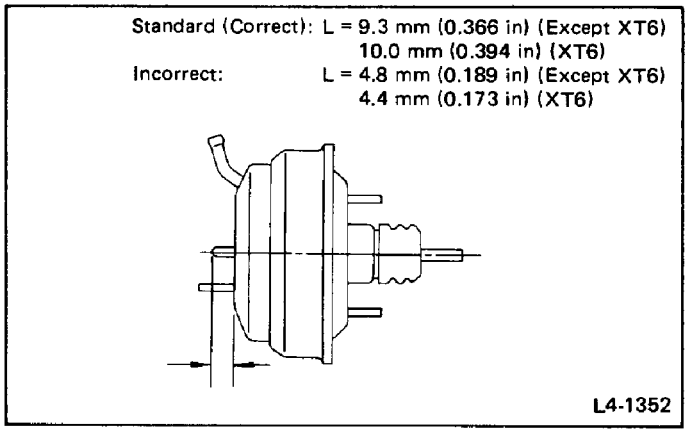

Fig. 98 Push rod projection

   (3) If protector is fitted correctly, reaction disc will not fall out.

2) Be careful not to drop brake booster. Brake booster should be discarded if it has been dropped.
3) Use special care when handling operating rod.
If excessive force is applied to operating rod, sufficient to cause a change in the angle in excess of ±3°, it may result in damage to the power piston cylinder.
4) Use care when placing brake booster on the floor.

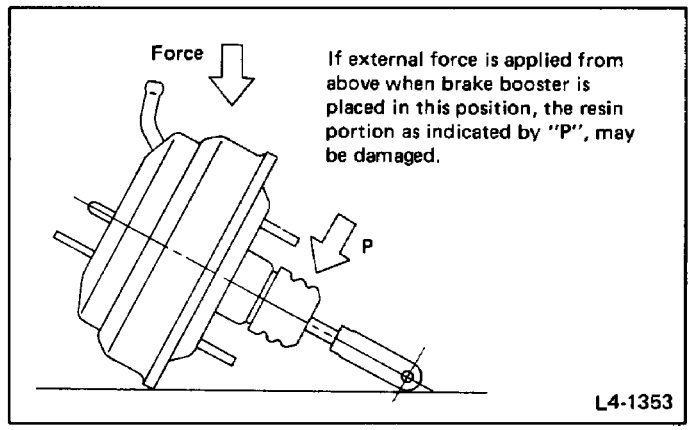

Fig. 99 Handling precaution

Brake Hose

REMOVAL

1) Separate brake pipe from brake hose.
(Always use flare nut wrench and be careful not to deform flare nut.)

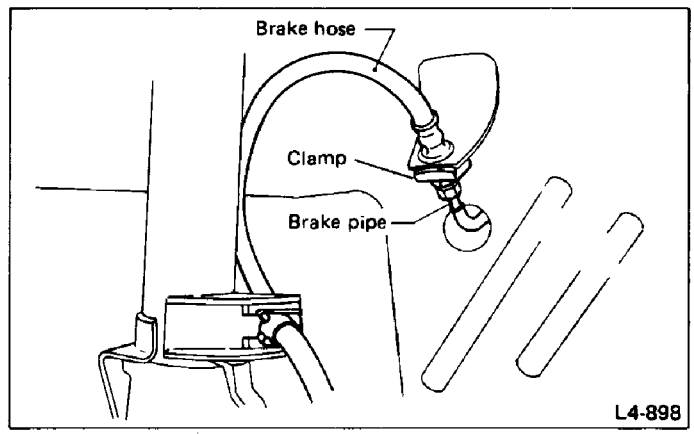

Fig. 100 Separating brake pipe

2) Pull out clamp to remove brake hose.

3) In case of front disc brake, remove clamp at strut and union bolt.

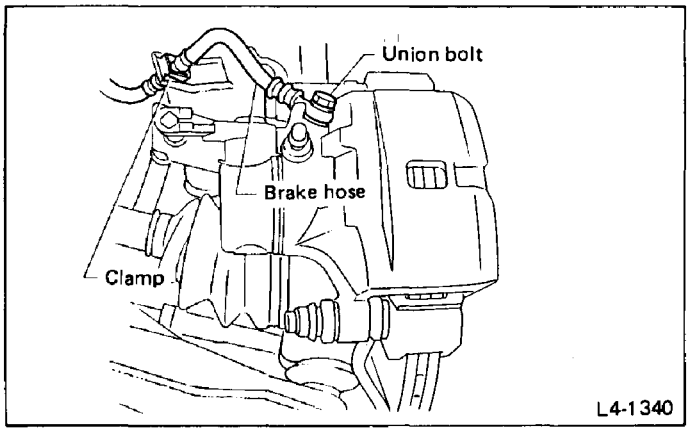

Fig. 101 Removing front brake hose

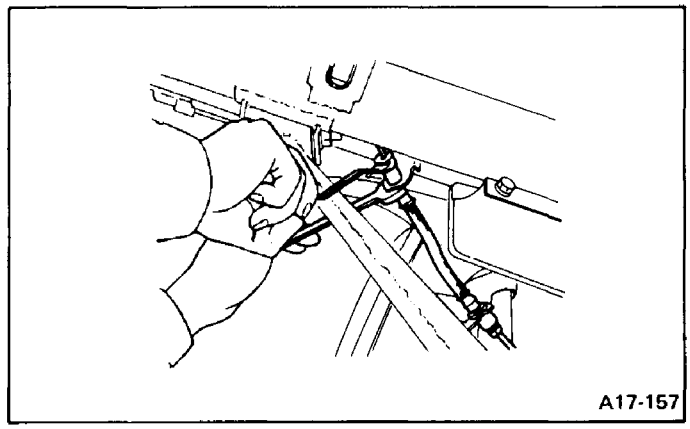

Fig. 102 Tightening flare nut

INSTALLATION

Front brake hose

1) Route end of brake hose (on caliper side) through hole in brake hose bracket at strut location.
2) Tighten end of brake hose at caliper using a union bolt.

Torque (Union bolt):
15 – 21 N·m (1.5 – 2.1 kg-m, 11 – 15 ft-lb)

3) Secure middle fitting of brake hose to bracket at strut location using a clamp.
4) Position disc in straight-forward direction and route brake hose through hole in bracket on wheel apron side. Be sure brake hose is not twisted.
5) Temporarily tighten flare nut to connect brake pipe and hose.
6) Fix brake hose with clamp at wheel apron bracket.
7) While holding hexagonal part of brake hose fitting with a wrench, tighten flare nut to the specified torque.

Torque (Brake pipe flare nut):
13 – 18 N·m (1.3 – 1.8 kg-m, 9 – 13 ft-lb)

8) Bleed air from the brake system.

Rear brake hose

1) Pass brake hose through the hole of bracket, and lightly tighten flare nut to connect brake pipe.
2) Insert clamp upward to fix brake hose.
3) Perform the same procedures as beforementioned in steps 7) and 8).

Proportioning Valve

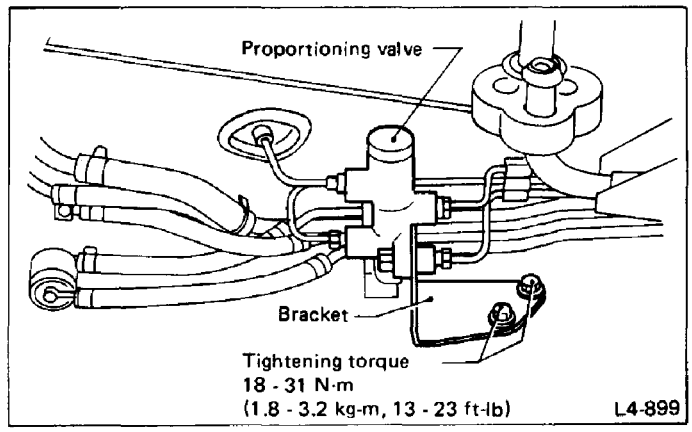

Fig. 103

INSPECTION

1) Install the oil pressure gauges to measure the master cylinder fluid pressure (front wheel brake fluid pressure) and rear wheel cylinder fluid pressure.
2) Bleed air from the oil pressure gauges.
3) Check the master cylinder fluid pressure and rear wheel cylinder fluid pressure.
The standard values are shown in figure.

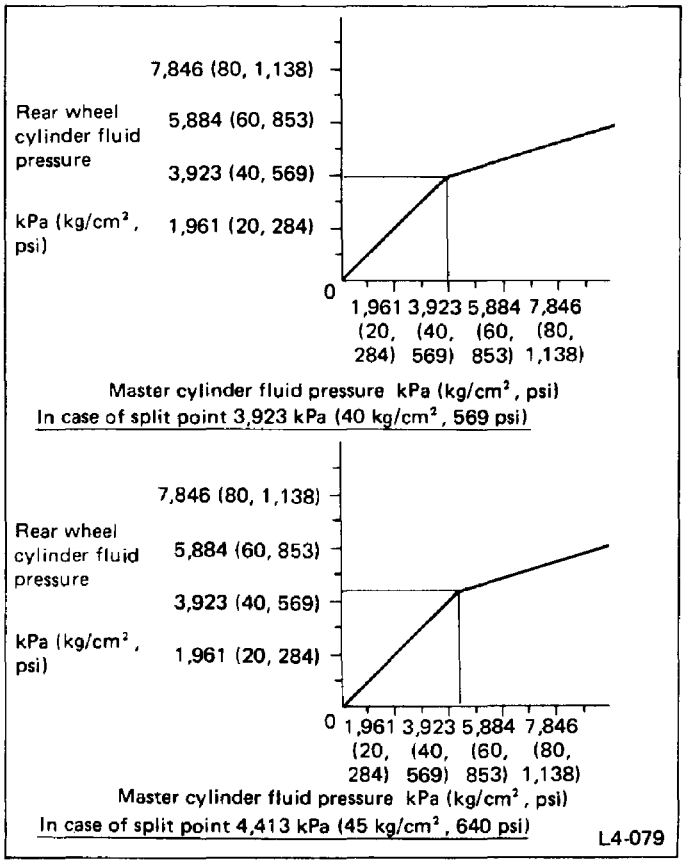

Fig. 104

REMOVAL

1) Remove brake pipe from proportioning valve at four places.
2) Remove proportioning valve from its bracket.

Do not disassemble or adjust the proportioning valve. (The proportioning valve must be replaced as an assembly.)

INSTALLATION

1) Install proportioning valve to bracket.
2) Connect brake pipes correctly to proportioning valve.
3) Bleed air, then check each joint of brake pipe for oil leaks.

Tightening torque:
Proportioning valve to brake pipe flare nut
13 – 18 N·m (1.3 – 1.8 kg-m, 9 – 13 ft-lb)
Proportioning valve to bracket
20.1 – 28.9 N·m
(2.05 – 2.95 kg-m, 14.8 – 21.3 ft-lb)

Hill-Holder

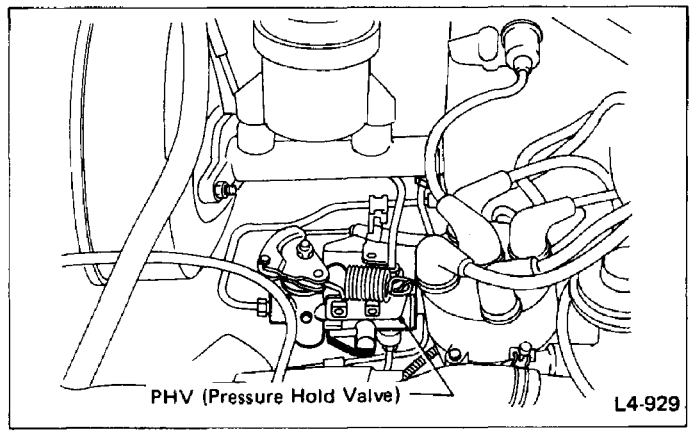

Fig. 105

REMOVAL

1) Drain brake fluid from reservoir on primary side of master cylinder.
2) Remove adjusting nut and cable clamp, and disconnect PHV cable from cable bracket on engine.
3) Detach PHV cable from clips.
4) Remove cable clamp, and disconnect PHV cable from PHV stay.

Carefully protect boots and inner cable from damage when disconnecting PHV cable.

5) Disconnect brake pipes from PHV.

a. Pay attention not to drop brake fluid onto body painting since it may dissolve paint.
b. Pay attention not to damage hexagonal head of flare nut by using pipe wrench without fail.

6) Detach PHV along with support from side frame.

Exercise utmost care to prevent foreign matter from entering into PHV when removing it.

INSPECTION

Check up removed parts as follows, and replace defective ones.
1) Check if boots of PHV cable are damaged or degraded, and if inner cable is damaged or corroded.
2) Check if return spring is worn out, damaged or corroded.

3) Confirm that rolling sound of ball is heard with PHV inclined and lever rotates smoothly.

CAUTION:
Never disassemble PHV. Replace entire PHV ASSY if necessary.

INSTALLATION

1) Assemble bracket with support of PHV.

Torque:
7 – 13 N·m (0.7 – 1.3 kg-m, 5.1 – 9.4 ft-lb)

2) Install PHV onto side frame.

Torque:
7 – 13 N·m (0.7 – 1.3 kg-m, 5.1 – 9.4 ft-lb)

3) Connect brake pipes to PHV.

Torque:
13 – 18 N·m (1.3 – 1.8 kg-m, 9 – 13 ft-lb)

Confirm that brake pipes are not deformed and/or damaged. Replace them with new ones if necessary.

4) Install PHV cable to PHV stay.

If cable clamp (and clips) is damaged, replace it with a new one.

5) Connect PHV cable with clips.

Avoid sharp bending of PHV cable as it may cause breakage.

6) Install PHV cable onto cable bracket on engine.

7) Apply grease to the following points.
- Hook portion of return spring
- Cable end portion of lever
- Cable end portion of clutch release fork

Grease:
SUNLIGHT 2 (P/N 003602010)

8) Be sure to bleed air from the system.

After replacing PHV cable or clutch cable with new one, operate clutch pedal about 30 times as a running-in operation prior to adjustment.

ADJUSTMENTS

1) Inspect free play of clutch pedal by depressing the pedal by hand. If it is out of the specified value, adjust it by turning adjusting nut on engine side end of clutch cable at release fork.

Standard of free play:
At clutch pedal
10 – 20 mm (0.39 – 0.79 in)
At center of cable on clutch release fork:
2WD: 2 – 3 mm (0.08 – 0.12 in)
4WD: 3 – 4 mm (0.12 – 0.16 in)

Torque:
Lock nut of clutch cable
5.4 – 9.3 N·m (0.55 – 0.95 kg-m, 4.0 – 6.9 ft-lb)
Lock nut of PHV cable
2.5 – 4.4 N·m (0.25 – 0.45 kg-m, 1.8 – 3.3 ft-lb)

2) Confirm stopping and starting performances by activating hill-holder on an uphill road of 3° or higher inclination.
(1) If vehicle does not stop;
Tighten adjust nut of PHV cable.
(2) If vehicle does not start properly;
- Case A – When hill-holder is released later than engagement of clutch pedal (Engine tends to stall.):
  Loosen adjust nut gradually until smooth starting is enabled.
- Case B – When hill-holder is released earlier than engagement of clutch pedal (Vehicle slips down slightly.):
  Tighten adjust nut so that hill-holder is released later than engagement of clutch pedal (status in Case A). Then make adjustment the same as in Case A.

CAUTION:
Whenever turning adjust nut, prevent PHV cable from revolving as shown in following figure.

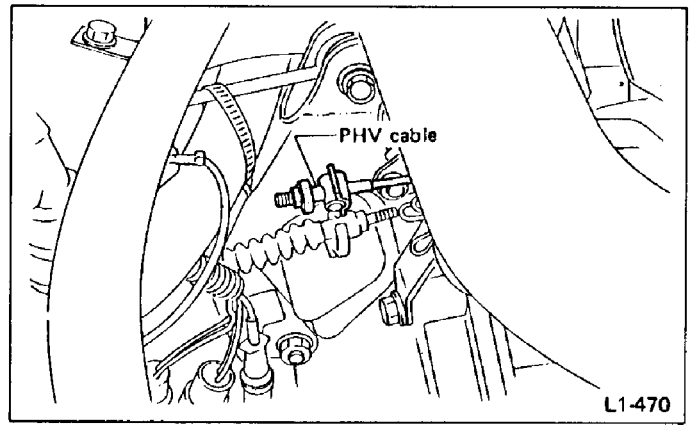

Fig. 106 Turning adjust nut for PHV cable

Parking (Hand) Brake

Parking (Hand) Brake Lever

REPLACEMENT

1) Remove parking brake cover.
2) Disconnect electric connector for parking brake switch.

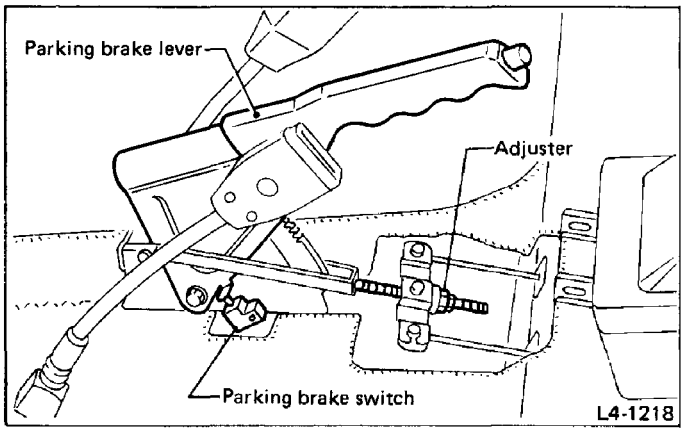

Fig. 107

3) Loosen parking brake adjuster, and remove inner cable end from equalizer.
4) Remove parking brake lever.
5) Install parking brake lever in the reverse order of removal.

Torque (Lever installing bolt):
10 – 18 N·m (1.0 – 1.8 kg-m, 7 – 13 ft-lb)

6) Adjust parking brake. (See "Adjustment of parking brake".)

Parking (Hand) Brake Cable

REPLACEMENT

1) Loosen front wheel nuts.
2) Jack up vehicle, and support it with safety stands (rigid racks).
3) Remove front tires and wheels.
4) Remove parking brake cover.
5) Loosen parking brake adjuster, then remove inner cable end from equalizer, and detach clamps.

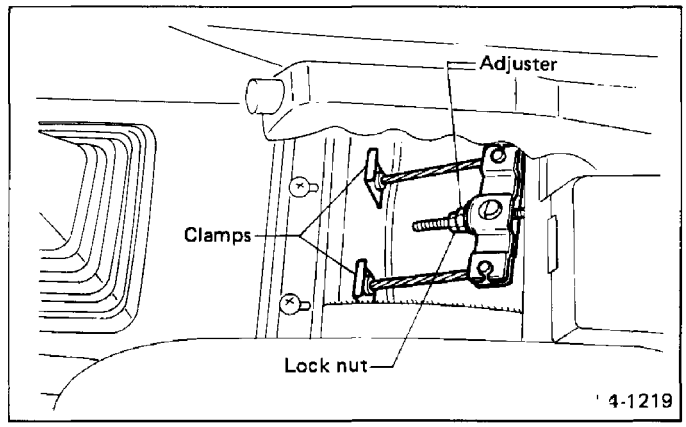

Fig. 108

6) Pull out parking brake cable clamp from caliper, and disconnect cable end.

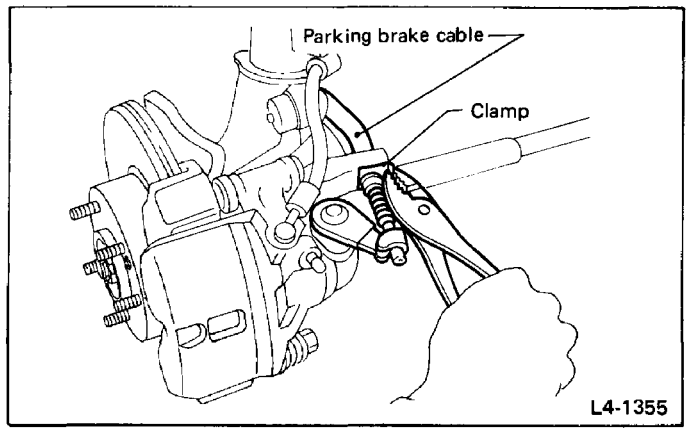

Fig. 109

7) Remove bolt and bracket from transverse link.
8) Remove bolt and clamp from leading bracket.

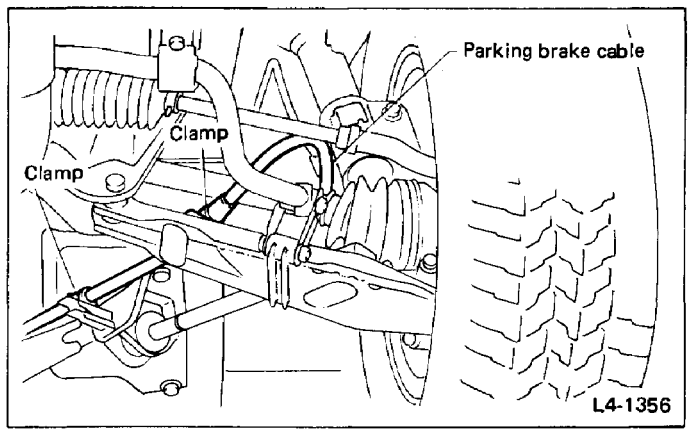

Fig. 110

9) Detach parking brake cable from cable guide at rear crossmember.

10) Remove cable ASSY from cabin by forcibly pulling it forward.
11) Install (new) parking brake ASSY in the reverse order of removal.

a. Be sure to pass cable through cable guide inside the tunnel.
b. Be sure to adjust the lever stroke.
c. Do not twist boot when attaching inner cable to lever of caliper body ASSY.
d. Be careful not to damage boot when driving clamp in.

Torque (Rear crossmember cable clamp):
10 – 16 N·m (1.0 – 1.6 kg-m, 7 – 12 ft-lb)
Torque (Bracket to transverse link):
10 – 16 N·m (1.0 – 1.6 kg-m, 7 – 12 ft-lb)

Adjustment of Parking (Hand) Brake

Before adjusting the hand brake, check the depressed height of brake pedal.
Make sure that the distance above is as specified, then perform the following operations.

Bleed air completely from the brake system before attempting the following operations.

1) Forcibly pull hand brake lever 3 to 5 times.
2) Adjust hand brake lever by turning adjuster until the play at the A portion is set at 0 to 0.5 mm (0 to 0.020 in), then confirm that the lever stroke is as specified.

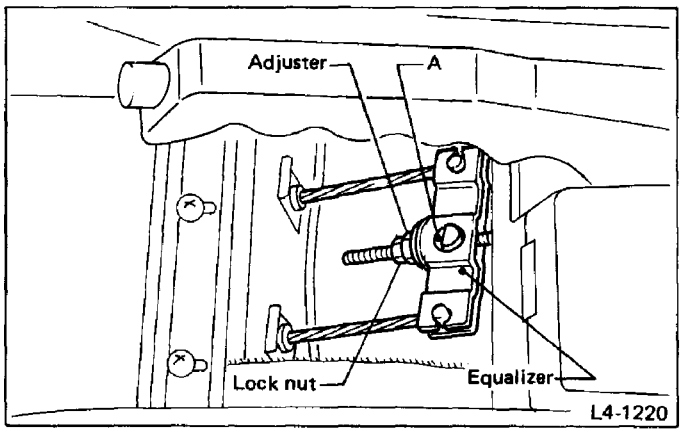

Fig. 111

Lever stroke:
3 to 4 notches when pulled
with a force of 245 N (25 kg, 55 lb)

Torque (Adjuster lock nut):
4.4 – 7.4 N·m (0.45 – 0.75 kg-m, 3.3 – 5.4 ft-lb)

Ensure that front brake is not dragging.

Brake Fluid Level Indicator

INSPECTION

1) Ensure that warning light will come on if brake fluid in reserve tank reduces to the following quantity.
(Check fluid level after starting engine.)

Reserve tank with level indicator:
Residual fluid quantity at light ON
Approx. 80 cm^3 (80 cc, 4.88 cu in)
Tank capacity
160 cm^3 (160 cc, 9.76 cu in)

2) Check float, etc. for deformation, and replace if necessary.

Air Bleeding

Bleed air out the front and rear brakes in the following manner.

General Rules for the Effective Bleeding

1) Start with the brakes (wheels) connecting to the secondary chamber of the master cylinder.
2) The time interval between two brake pedal operations (from the time when the pedal is released to the time when it is depressed another time) shall be approximately 3 seconds.
3) The air bleeder on each brake shall be released for 1 to 2 seconds.

Recommended Brake Fluid

FMVSS No. 116, fresh DOT3 or 4 brake fluid

Bleeding Procedure

a. The FMVSS No. 116, fresh DOT3 or 4 brake fluid must be used.
b. During bleeding operation, keep the brake reserve tank filled with brake fluid to eliminate entry of air.
c. Ensure also that the linings and pads are free from brake fluid.

1) Make sure that there is no leak from joints and connections of the brake system.
2) Fit one end of vinyl tube into the air bleeder and put the other end into a brake fluid container.
3) Slowly depress the brake pedal and keep it depressed. Then, open the air bleeder to discharge air together with the fluid.
Release air bleeder for 1 to 2 seconds.
Next, with the bleeder closed, slowly release the brake pedal.
Repeat these steps until there are no more air bubbles in the vinyl tube.
Allow 3 to 4 seconds between two brake pedal operations.

a. Brake pedal operation must be very slow.
b. Cover bleeder with waste cloth, when loosening it, to prevent brake fluid from being splashed over surrounding parts.

4) Tighten air bleeder securely when no air bubbles are visible.

Air bleeder tightening torque:
7 – 9 N·m (0.7 – 0.9 kg-m, 5.1 – 6.5 ft-lb)

5) Perform these steps for the brakes connecting to the secondary chamber of master cylinder, first, and then for the ones connecting to primary chamber. With all procedures completed, fully depress the brake pedal and keep it in that position for approximately 20 seconds to make sure that there is no leak evident in the entire system.

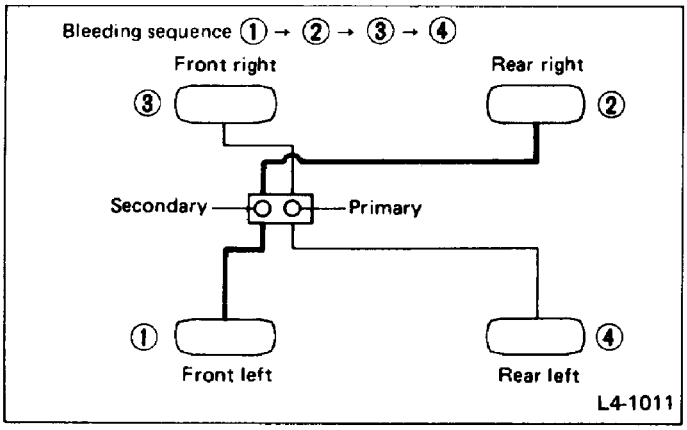

Fig. 112

6) If the pedal action is soft and spongy, or pedal travels excessively, the system must be bled of air again.
7) Add brake fluid to the required level (MAX level) of reserve tank.
8) As a final step, test run the vehicle at low speed and apply brakes relatively hard 2 to 3 times to ensure that brakes provide normal braking action on all four wheels without dragging and uneven braking.

Replacement of Brake Fluid

To always maintain the brake fluid characteristics, replace the brake fluid according to maintenance schedule or earlier than that when used in severe condition.

REPLACEMENT

1) Either jack up the front end of vehicle and place a safety stand under it, or drive vehicle onto the pit and then jack up the front end.
2) Remove both left and right front wheels.
3) Remove filler cap from brake fluid tank.
Install one end of a vinyl tube onto the air bleeder of front brake and insert the other end of the tube into a container to collect the brake fluid.
To drain fluid into container, open the air bleeder and repeatedly depress and release the brake pedal until a small amount of fluid remains in the reservoir tank.
Then tighten the bleeder screw.

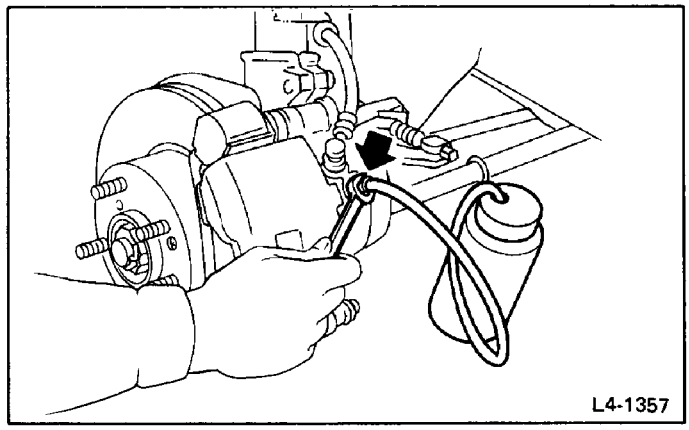

Fig. 113

a. The brake piping consists of a dual system, cross design. The piping on the primary side connects the right front brake and the rear left brake and the piping on the secondary side connects the left front brake and rear right brake.
b. For convenience and safety, it is advisable to have two men working.
c. Be careful not to spill brake fluid onto the painted surface.
d. Discard the drained brake fluid and do not reuse it.

4) Refill reservoir tank with recommended brake fluid.

Recommended brake fluid:
FMVSS No. 116, fresh DOT3 or 4 brake fluid

a. Avoid mixing different brands of brake fluid to prevent degrading the quality of the fluid.
b. Be careful not to allow dirt or dust to get into the reservoir tank.
c. Use fresh DOT3 or 4 brake fluid when replacing or refilling the fluid.
d. Always check to be sure a small amount of brake fluid is in the tank while changing brake fluid.
e. The amount of brake fluid required is approximately 270 mℓ (9.1 US fl oz, 9.5 Imp fl oz) for total brake system.
f. Bleed air according to illustrated sequence.

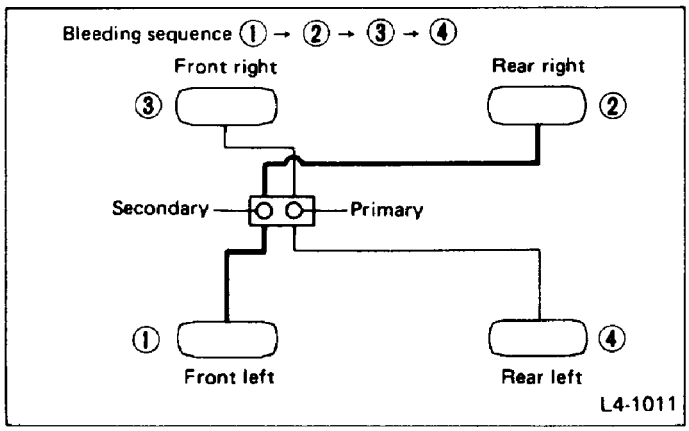

Fig. 114

5) Instruct your co-worker to depress the brake pedal slowly two or three times and then hold it depressed.
6) Loosen bleeder screw approximately 1/4 turn until a small amount of brake fluid drains into container, and then quickly tighten screw.
7) Repeat steps 5) and 6) above until there are no air bubbles in drained brake fluid and new fluid flows through vinyl tube.

Add brake fluid as necessary while performing the air bleed operation, in order to prevent the tank from running short of brake fluid.

8) After completing the bleeding operation, hold brake pedal depressed and tighten screw and install bleeder cap.

Tightening torque (Bleeder screw):
7 – 9 N·m (0.7 – 0.9 kg-m, 5.1 – 6.5 ft-lb)

9) Bleed air from each wheel cylinder using the same procedures as described in steps 5) through 8) above.

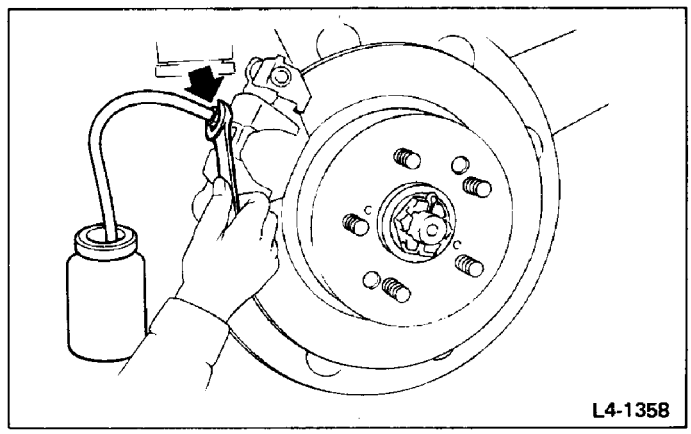

Fig. 115

10) Depress brake pedal with a force of approximately 294 N (30 kg, 66 lb) and hold it there for approximately 20 seconds. At this time check pedal to see if it shows any unusual movement.
Visually inspect bleeder screws and brake pipe joints to make sure that there is no fluid leakage.
11) Install wheels, and drive car for a short distance between 2 to 3 km (1 to 2 miles) to make sure that brakes are operating properly.

TROUBLESHOOTING

Entire Brake System

Trouble and possible cause	Remedy
1. Insufficient braking	
(1) Oil leakage from the hydraulic mechanism	Repair or replace (cup, piston seal, piston boot, master cylinder piston kit, pipe or hose).
(2) Entry of air into the hydraulic mechanism	Bleed the air.
(3) Excessively wide shoe clearance	Adjust the clearance.
(4) Wear, deteriorated surface material, adhering water or oil on the lining	Replace, grind or clean.
(5) Improper operation of master cylinder, wheel cylinder, disc caliper, brake booster or check valve	Correct or replace.
2. Unstable or uneven braking	
(1) Oil on the lining, drum	Eliminate cause of oil leakage, clean, or replace.
(2) Oil on the pad, rotor	Eliminate cause of oil leakage, clean, or replace.
(3) Drum or rotor eccentricity	Correct or replace the drum or rotor.
(4) Worn brake drum, or damage to the drum caused by sand	Correct by grinding, or replace.
(5) Improper lining or pad contact, deteriorated surface material, improper inferior material, or wear	Correct by grinding, or replace.
(6) Deformed back plate	Correct or replace.
(7) Loosened back plate or the support installing bolts	Retighten.
(8) Loosened rear wheel bearing	Retighten to normal tightening torque or replace.
(9) Trouble in the hydraulic system	Replace the cylinder, brake pipe or hose.
(10) Uneven effect of the hand brake	Check, adjust, or replace the front brake and cable system.
3. Excessive pedal stroke	
(1) Entry of air into the hydraulic mechanism	Bleed the air.
(2) Excessive play in the master cylinder push rod	Adjust.
(3) Oil leakage from the hydraulic mechanism	Repair or replace (cup, piston seal, piston boot, master cylinder piston kit, pipe or hose).
(4) Improperly adjusted shoe clearance	Adjust.
(5) Improper lining contact or worn lining	Correct or replace.
(6) Improper pad contact or worn pad	Correct or replace.

Trouble and possible cause	Remedy
4. Brake dragging or improper brake return	
(1) Insufficient pedal play	Adjust play.
(2) Improper master cylinder return	Clean or replace the cylinder.
(3) Clogged hydraulic system	Replace.
(4) Improper return or adjustment of hand brake	Correct or adjust.
(5) Weakened spring tension or breakage of shoe return spring	Replace the spring.
(6) Excessively narrow shoe clearance	Adjust the clearance.
(7) Improper wheel cylinder operation	Correct or replace.
(8) Improperly adjusted rear wheel bearing	Adjust or replace.
5. Brake noise (1) (creak sound)	
(1) Hardened or deteriorated lining or pad	Replace the shoe ASSY or pad.
(2) Worn lining or pad	Replace the shoe ASSY or pad.
(3) Loosened back plate or the support installing bolts	Retighten.
(4) Loose rear wheel bearing	Retighten to normal tightening torque.
(5) Dirty drum or rotor	Clean the drum or rotor, or clean and replace the brake ASSY.
6. Brake noise (2) (hissing sound)	
(1) Worn lining or pad	Replace the shoe ASSY or pad.
(2) Improperly installed shoe or pad	Correct or replace the shoe ASSY or pad.
(3) Loose or bent drum or rotor	Retighten or replace.
7. Brake noise (3) (click sound)	
In the case of the disc brake.	
(1) Excessively worn pad or the support	Replace the pad or the support.
In the case of the drum brake.	
(1) Excessively worn shoe ridge	Replace the back plate.
(2) Excessively worn wheel cylinder piston	Replace the wheel cylinder ASSY.
(3) Lack of oil on the shoe ridge surface and anchor	Add more grease.

Hill-Holder

Trouble and possible cause	Remedy
1. Counterforce of clutch pedal is too strong	
(1) PHV cable is damaged or does not operate properly	Repair or replace.
(2) Lever of PHV is defective	Replace entire PHV ASSY.
(3) Clutch system is anomalous	Refer to "Clutch and pedal cable system".
2. Vehicle does not stop on uphill road of 3° or higher inclination	
(1) Front side of vehicle is lowered	Refer to "Suspension".
(2) PHV cable is broken	Replace.
(3) Play of clutch is excessive	Adjust.
(4) PHV cable is elongated	Adjust.
(5) Sealing of PHV is poor	Replace entire PHV ASSY.
3. Shock is felt when starting	
(1) Poor adjustment of starting performance	Adjust.
(2) When depressing the brake pedal strongly:	(The stronger brake pedal depressing force, the later hill holder releasing.)
(3) When starting on flat road after stopping reverse movement:	(Because hill holder is activated.)
4. Vehicle slips down when starting	
(1) PHV cable is elongated	Adjust.
(2) Clutch facing is worn out	Adjust or replace.
(3) Bracket (cable) or stay (PHV) is deformed	Repair or replace.
5. Vehicle cannot start after stoppage	
(1) Return spring is fatigued or broken	Replace.
(2) PHV lever won't return	Replace entire PHV ASSY.
(3) When intentionally depressing brake pedal strongly:	[When the brake pedal is depressed by a force of 1,177 N (120 kg, 265 lb) or more.]
6. Abnormal sound is generated upon releasing brake pedal when stopping	
Rotor and pad, drum and lining matched with each other due to inadequate depressing force to brake pedal	(Abnormal sound is not generated when depressing brake pedal a little stronger.)

Trouble and possible cause	Remedy
7. Abnormal sound is generated when operating clutch pedal	
(1) Grease is inadequate for the hook of return spring and sliding portion of PHV cable end	Apply grease.
(2) When releasing after maintaining high fluid pressure:	(Flowing sound of fluid when releasing high fluid pressure.)
(3) Clutch system is anomalous	Refer to "Clutch and pedal cable system".

CAUTION:
a. Description in parentheses is a characteristic of hill-holder and does not indicate abnormality.
Depressing force required for clutch pedal equipped to hill-holder specifications is 20 to 29 N (2 to 3 kg, 4 to 7 lb) larger than the conventional specifications, which does not constitute abnormality.
b. When vehicle cannot travel (brake cannot be released) because return spring is broken, remove adjust nut, disconnect clutch and PHV, and then return PHV lever to release the brake. (Be sure to apply the parking brake before starting this operation.)
c. The hill-holder may not be activated on a slope of an extremely small inclination. If you want to correct it, insert a shim in between the side frame and support, thereby raising the front of PHV.
When inserting a shim, be sure to confirm stopping status on a slope whenever inserting a single shim. It is recommendable to avoid raising front of PHV excessively. Never insert 2 or more shims at a time.

Part Number	Part Name
725807000	Shim

[Thickness of shim is 0.6 mm (0.024 in), and one shim increases an angle of 0.5°.]

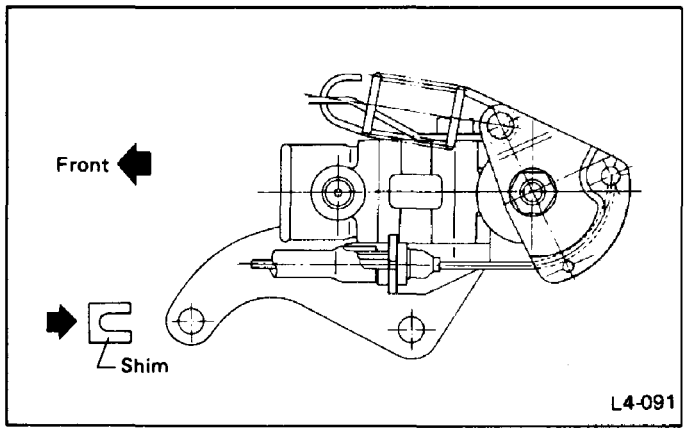

Fig. 116 Inserting shim

PEDAL SYSTEM AND CONTROL CABLES

4-5

SUBARU

1988

	Page
MECHANISM AND FUNCTION	2
Pedal Effort Reducing Mechanism (2700 cc model)	2
SPECIFICATIONS AND SERVICE DATA	3
COMPONENT PARTS	4
Pedal (Manual Transmission)	4
Pedal (Automatic Transmission)	5
SERVICE PROCEDURE	6
Pedal	6
Cable	10

MECHANISM AND FUNCTION

Pedal Effort Reducing Mechanism (2700 cc model)

A. CONSTRUCTION

Two arms are welded on the clutch pedal. One end of each arm is equipped with a spring.

B. OPERATION

When the clutch pedal is depressed, the two arms also move and spring hooks change position. When the arms move past the line (between the stationary position of the hook and the centerline of shaft), the effort required to depress the clutch pedal is reduced.

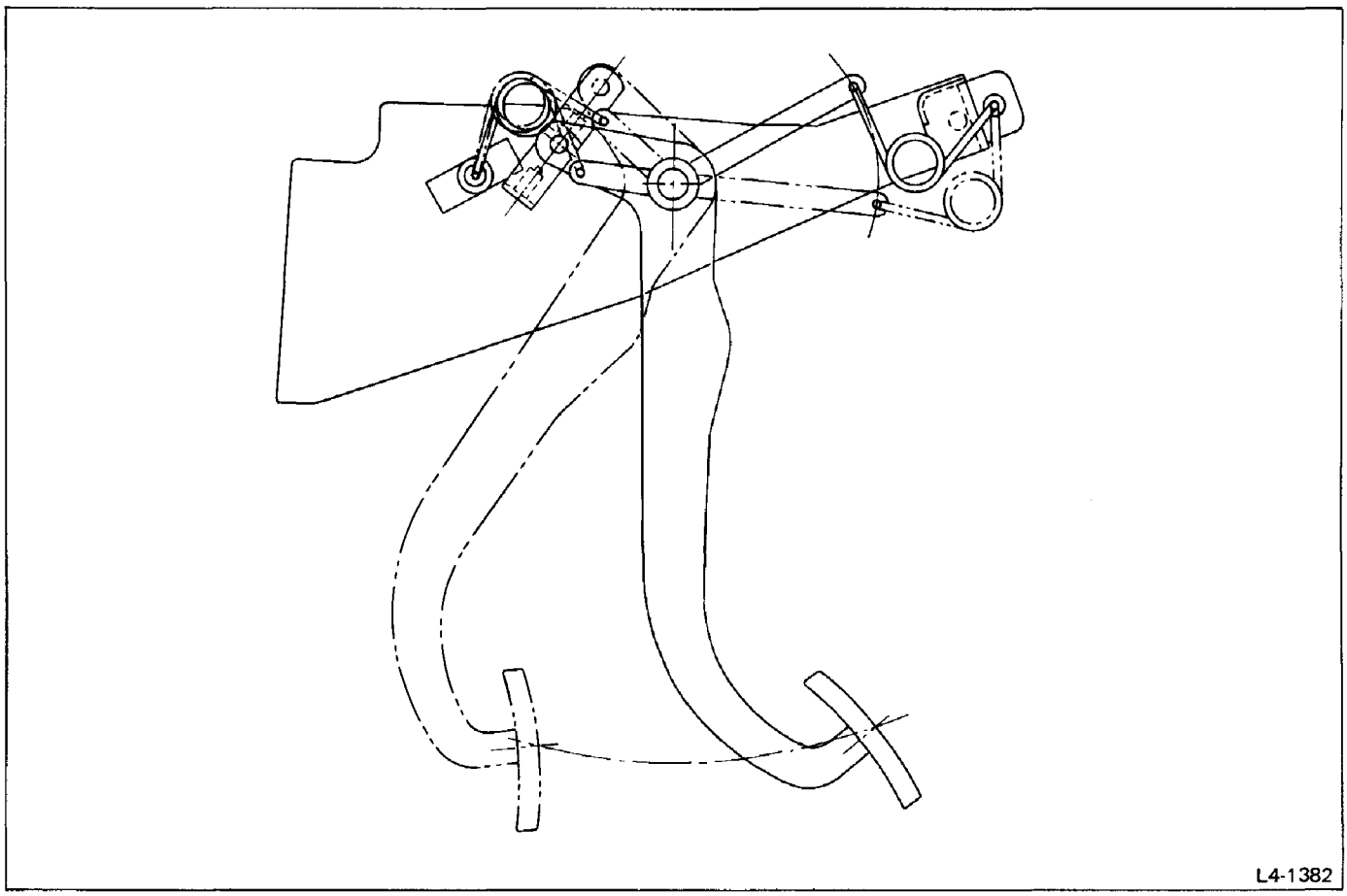

Fig. 1

SPECIFICATIONS AND SERVICE DATA

MAINTENANCE STANDARDS

Brake pedal	Free play Reserve distance (Remaining clearance)		0.5 – 2.5 mm (0.020 – 0.098 in) More than 120 mm (4.72 in)/294 N (30 kg, 66 lb)
Clutch pedal	Free play	At clutch pedal pad	10 – 20 mm (0.39 – 0.79 in)
		At center of cable on clutch release fork	4WD: 3 – 4 mm (0.12 – 0.16 in) FWD: 2 – 3 mm (0.08 – 0.12 in)
	Full stroke	At center of cable on clutch release fork	4WD: 25.5 – 27 mm (1.004 – 1.063 in) FWD: 17 – 18 mm (0.67 – 0.71 in)
Accelerator pedal	Free play	At pedal pad	0 – 4 mm (0 – 0.16 in)
	Stroke	At pedal pad	46 – 50 mm (1.81 – 1.97 in)
		At cable end	33 – 38 mm (1.30 – 1.50 in)

COMPONENT PARTS

Pedal (Manual Transmission)

Tightening torque: N·m (kg-m, ft-lb)
T1: 23 – 36 (2.3 – 3.7, 17 – 27)
T2: 6 – 9 (0.6 – 0.9, 4.3 – 6.5)
T3: 13 – 23 (1.3 – 2.3, 9 – 17)

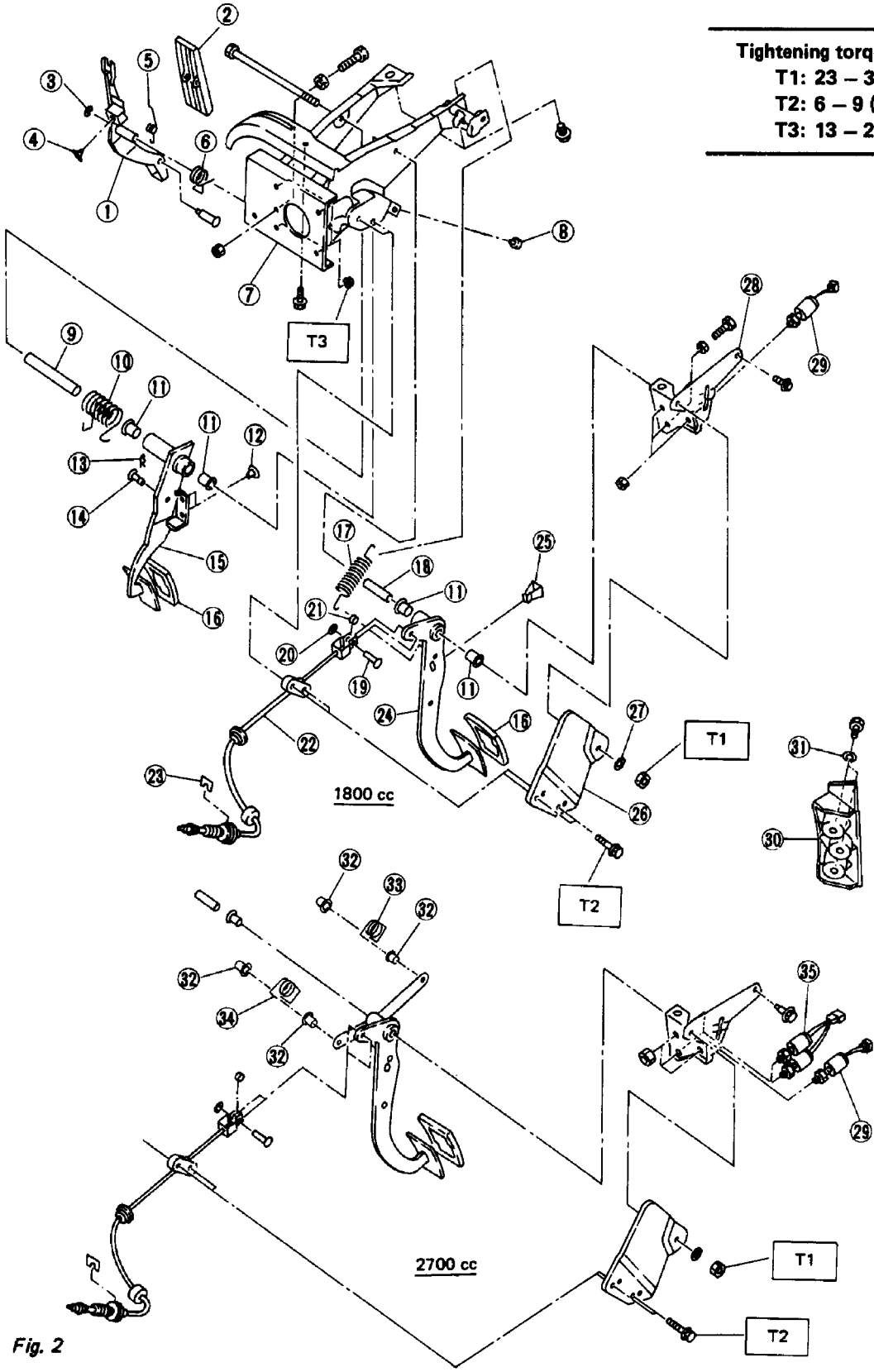

1 Accelerator pedal CP
2 Accelerator pedal pad
3 Clip
4 Stopper
5 Spring (accelerator pedal pad)
6 Spring (accelerator pedal)
7 Bracket CP
8 Stopper
9 Spacer
10 Spring (brake)
11 Bushing
12 Stopper
13 Snap pin
14 Clevis pin
15 Brake pedal
16 Pad
17 Spring (clutch)
18 Spacer
19 Clevis pin
20 Clip
21 Bushing
22 Clutch cable
23 Clamp
24 Clutch pedal
25 Stopper
26 Bracket
27 Spring washer
28 Clamp
29 Stop lamp switch
30 Footrest
31 Washer
32 Bushing
33 Spring
34 Spring
35 Stop & brake switch (cruise)

Fig. 2 L4-1384

Pedal (Automatic Transmission)

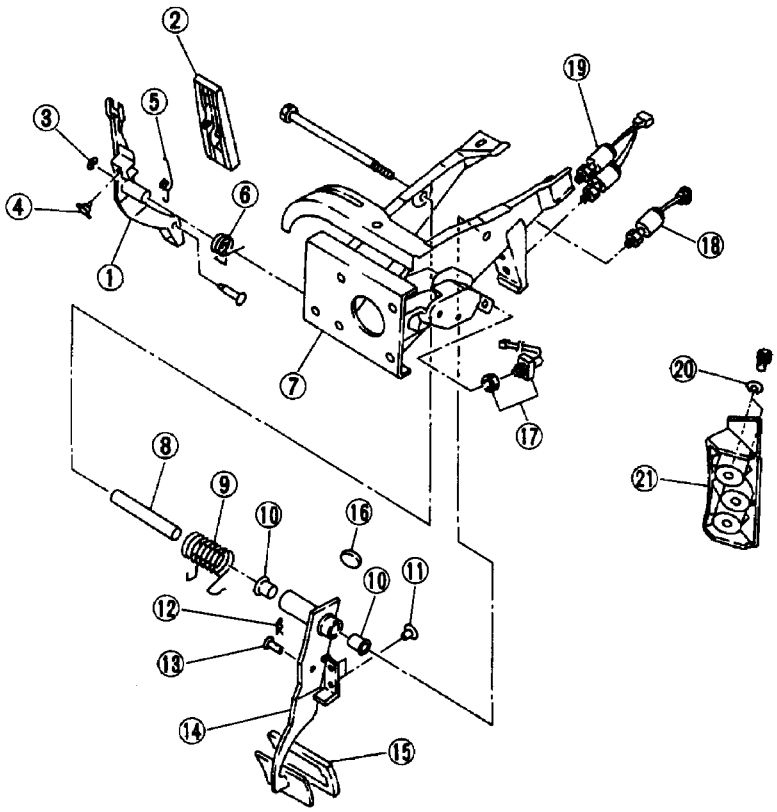

1 Accelerator pedal CP
2 Accelerator pedal pad
3 Clip
4 Stopper
5 Spring (accelerator pedal pad)
6 Spring (accelerator pedal)
7 Bracket
8 Spacer
9 Spring (brake)
10 Bushing
11 Stopper
12 Snap pin
13 Clevis pin
14 Brake pedal
15 Pad
16 Plug toe board
17 Kick down switch
18 Stop lamp switch
19 Stop & brake switch (cruise)
20 Washer
21 Foot rest

L4-1226

Fig. 3

SERVICE PROCEDURE

Pedal

ON-CAR SERVICE

1) BRAKE PEDAL

1) Check position of pedal pad.
If it is not within specified value, adjust it by adjusting brake booster operating rod length.

Reserve distance (Remaining clearance):
More than 120 mm (4.72 in)/294 N (30 kg, 66 lb)

Check free play by operating pedal by hand.
If it is not within specified value, adjust it by adjusting position of stop lamp switch.

Be careful not to rotate stop lamp switch.

Brake pedal free play:
0.5 – 2.5 mm (0.020 – 0.098 in)

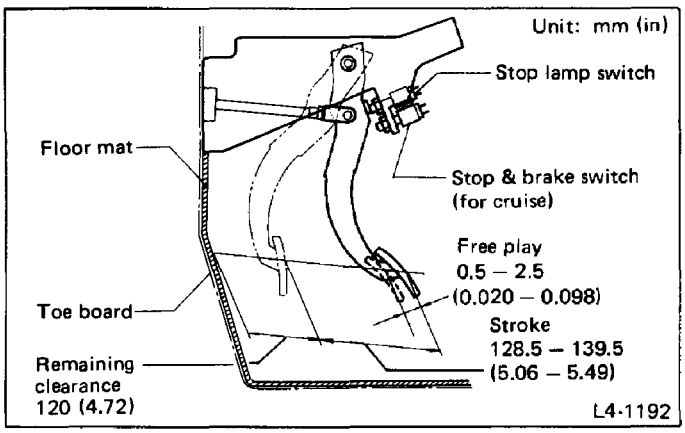

Fig. 4

2) Apply grease to operating rod connecting pin to prevent it from wearing.

2) CLUTCH PEDAL

1) Check clutch pedal free play by operating pedal by hand.
If it is not within specified value, adjust it by turning adjusting nut on engine side end of clutch cable.

Free play:
at clutch pedal pad
10 – 20 mm (0.39 – 0.79 in)
at center of cable on clutch release fork
FWD: 2 – 3 mm (0.08 – 0.12 in)
4WD: 3 – 4 mm (0.12 – 0.16 in)

Lock nut tightening torque:
5.4 – 9.3 N·m (0.55 – 0.95 kg-m, 4.0 – 6.9 ft-lb)

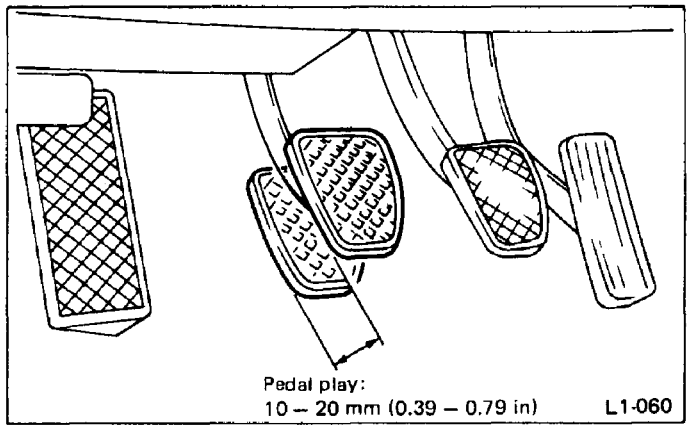

Fig. 5

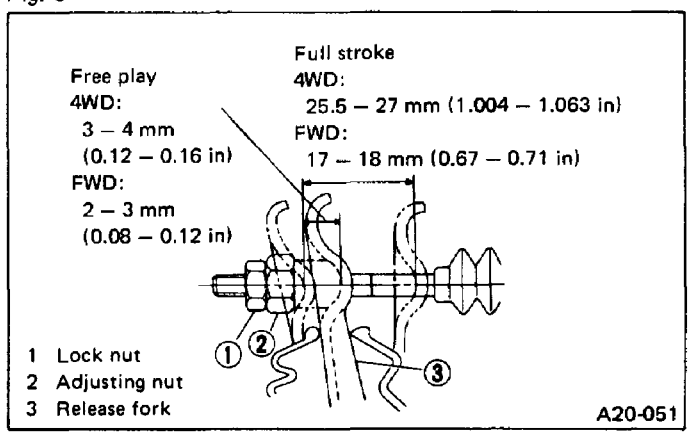

Fig. 6

2) Apply grease to connecting portion of clutch pedal and clutch cable and contact point of clutch release fork and clutch cable nut.

3) ACCELERATOR PEDAL

Check pedal stroke and free play by operating accelerator pedal by hand.
If it is not within specified value, adjust it by turning nut connecting accelerator cable to throttle body.

Free play at pedal pad:
0 – 4 mm (0 – 0.16 in)
Stroke:
at pedal pad 46 – 50 mm (1.81 – 1.97 in)
at cable end 33 – 38 mm (1.30 – 1.50 in)

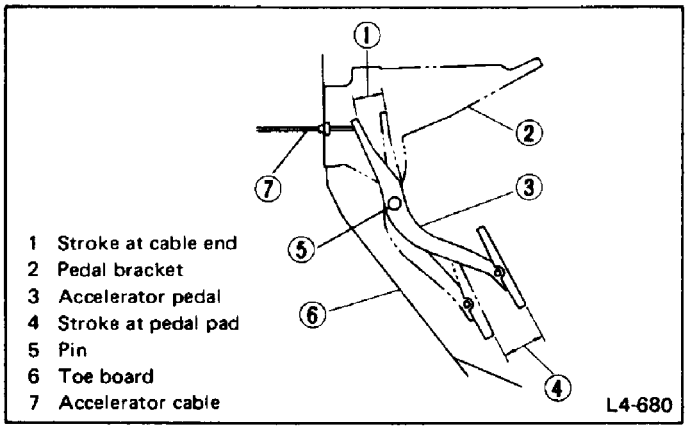

Fig. 7

REMOVAL AND DISASSEMBLY

1) Disconnect ground cable from battery.
2) Disconnect accelerator cable from throttle body.
3) Disconnect/detach clutch cable from the following parts.
   (1) Clutch release fork
   (2) Clamp on transmission case
   (3) Grommet of toe board
4) Detach trim panel and lower steering column.
5) Disconnect the following parts from pedal bracket.
   (1) Operating rod of brake booster
   (2) Electrical connectors (for stop light switch, etc.)
   (3) Accelerator cable

Be careful not to kink accelerator cable.

6) Remove pedal bracket ASSY along with clutch cable while supporting brake booster in engine room.
7) Detach following parts from pedal bracket ASSY.
   (1) Accelerator pedal return spring
   (2) Accelerator pedal
   (3) Clutch cable
   (4) Brake pedal return spring
   (5) Clutch pedal return spring (vehicle with Hill-Holder)
   (6) Circlip retaining pedal shaft
   (7) Clutch pedal and brake pedal
   (8) Stop light switch

INSPECTION

1) PEDAL SHAFT AND BUSHING

1) Clean off grease and dust, and inspect for wear and damage.
2) Inspect play between bushing and shaft; replace bushing and/or shaft with new one if defective.

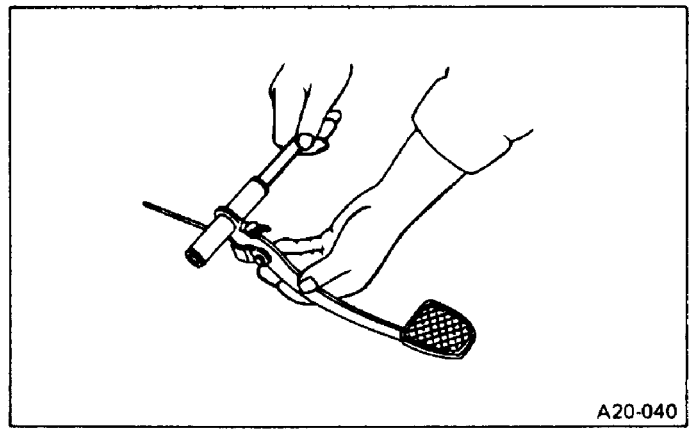

Fig. 8

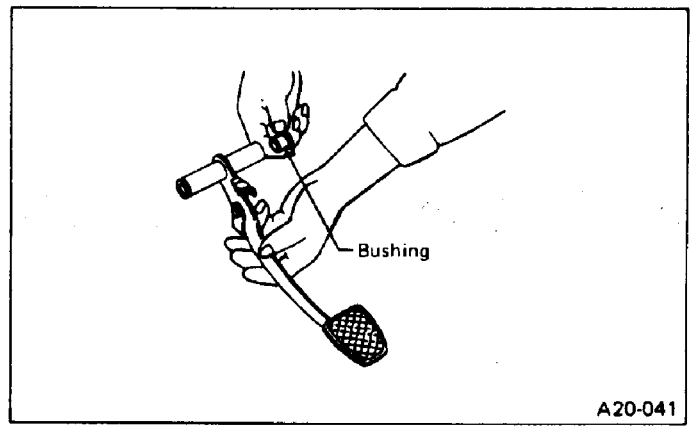

Fig. 9

2) ACCELERATOR PEDAL

Clean all parts and inspect for wear and damage.
Replace it with new one if defective.

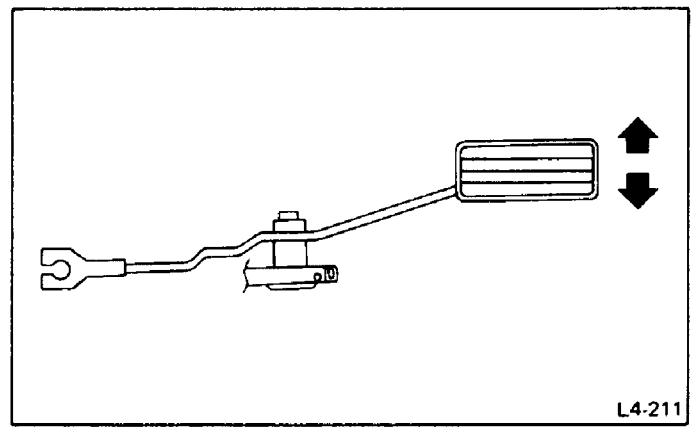

Fig. 10

3) STOP LIGHT SWITCH

Inspect switch stroke and operation.
If operation is not smooth and/or stroke is not within specified value, replace it with new one.

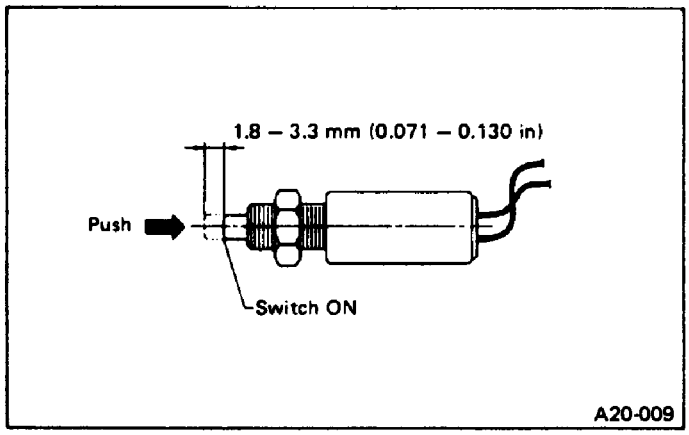

Fig. 11

ASSEMBLY

1) Attach stop light switch, etc. to pedal bracket temporarily.
2) Clean inside of bores of clutch pedal and brake pedal, apply grease, and set bushings into bores.
3) Align bores of pedal bracket, clutch pedal and brake pedal, attach brake pedal return spring and clutch pedal return spring (vehicle with Hill-Holder), and then install pedal shaft completely to prevent it from rotating.

Clean inside of bushes and apply grease before installing shaft.

4) Clean and apply grease to shaft and inside of bore of accelerator pedal. Install accelerator pedal onto pedal bracket.
5) Set brake pedal position by adjusting position of stop light switch.

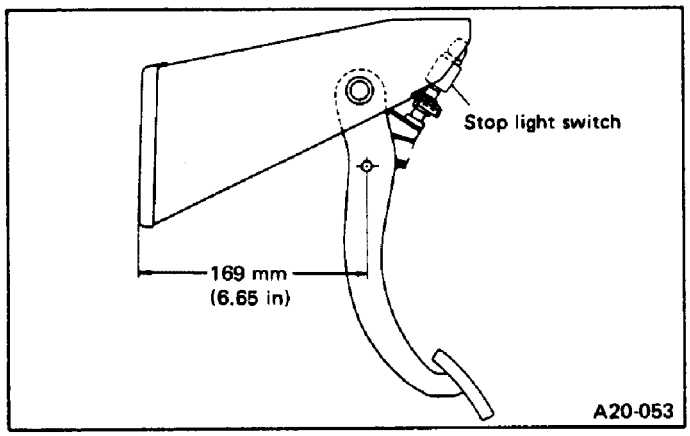

Fig. 12

Torque (Lock nut):
5.4 – 9.3 N·m (0.55 – 0.95 kg-m, 4.0 – 6.9 ft-lb)

6) Connect clutch cable to clutch pedal by using clevis pin and clip.

Clamp bolt torque:
5.9 – 8.8 N·m (0.60 – 0.90 kg-m, 4.3 – 6.5 ft-lb)

For connection of clutch cable of 2700 cc model, see the topic "Clutch Cable".

INSTALLATION

1) Insert clutch cable into hole on toe board, and set pedal bracket above steering column.

Be careful not to bend clutch cable too much.

2) Insert bolts of brake booster into holes on toe board, support it from engine room, and fit holes of pedal bracket onto the bolts.
At this time, operating rod of brake booster should be engaged with brake pedal.
3) While pushing pedal bracket upward firmly, tighten 4 nuts and 2 bolts at its upper surface.

Tightening torque:
13 – 23 N·m (1.3 – 2.3 kg-m, 9 – 17 ft-lb)

4) Connect operating rod of brake booster to brake pedal using clevis pin and snap pin.

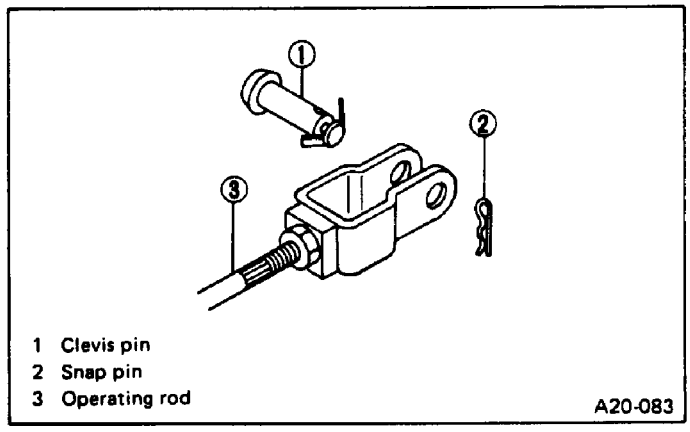

Fig. 13

5) Pull out accelerator inner cable to its maximum stroke, and attach it to accelerator pedal.
Pull accelerator cable from throttle body side.

Be careful not to kink accelerator cable.

6) Connect electrical connectors for stop light switch, etc.
7) Install steering column as before.
8) Connect accelerator cable to throttle body.

Make sure to check operation of accelerator cable by operating accelerator pedal by hand.

9) Attach clutch cable grommet to toe board, and then connect clutch cable to clutch release fork.

Never fail to cover outer cable end with boot.

Cable

1. Clutch Cable

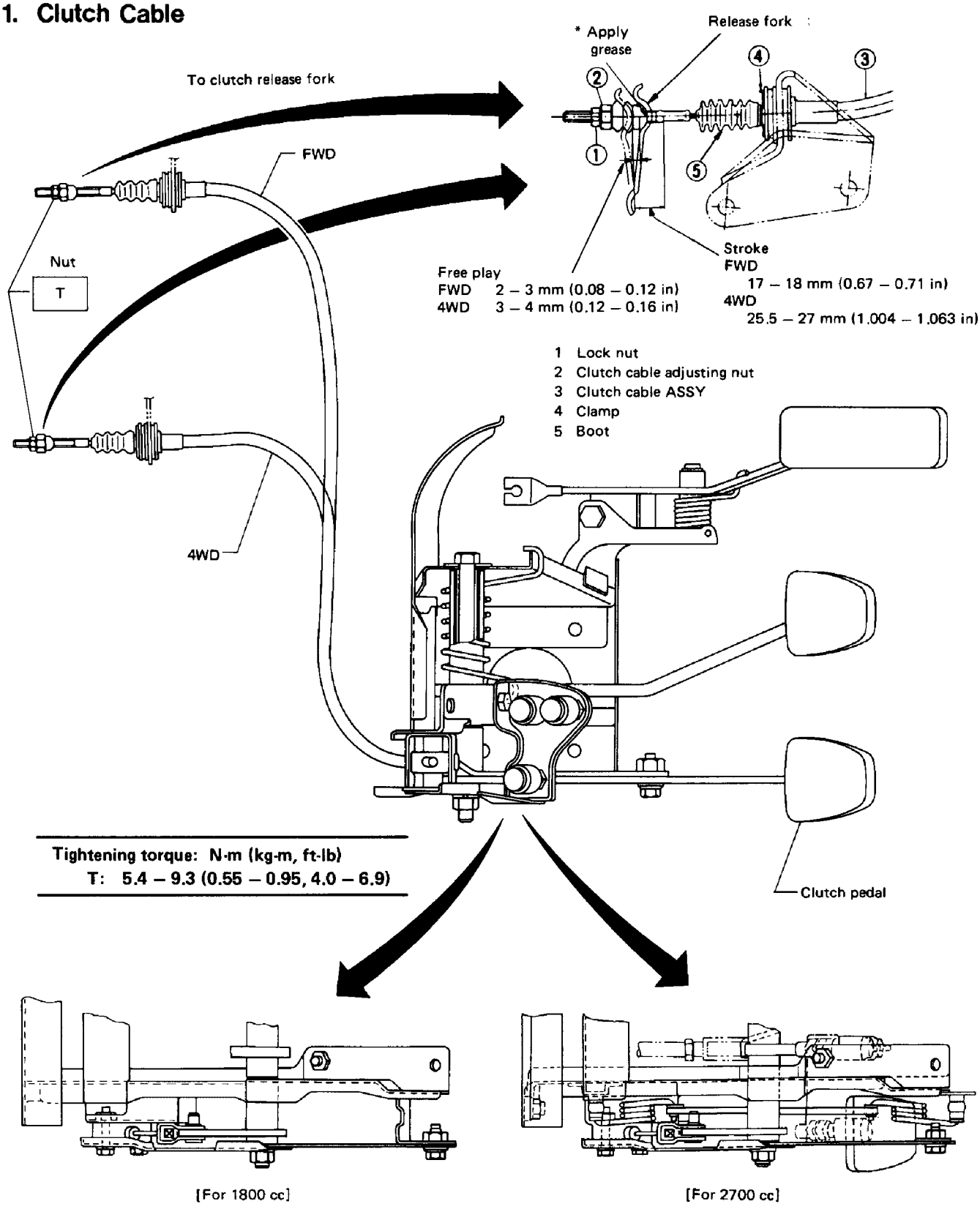

Fig. 14

L4-1385

CLUTCH CABLE (2700 cc)

1) Removal

(1) Disconnect clutch cable on transmission side. Push grommet into passenger compartment.

(2) Remove trim panel located under pedal shaft.

(3) Remove a nut at pedal shaft and two bolts which hold clamp with bracket, and detach clamp.

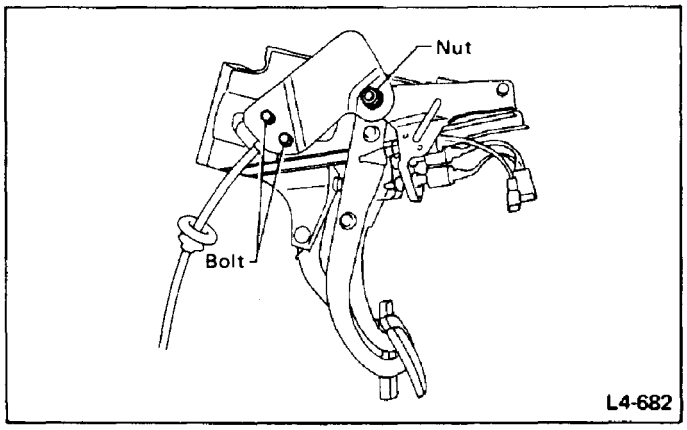

Fig. 15

(4) Remove clip from clevis pin which holds clutch cable to clutch pedal. Remove clevis pin and clutch cable.

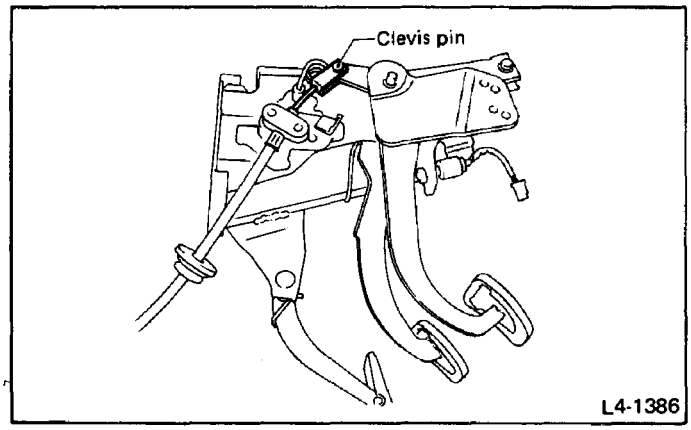

Fig. 16

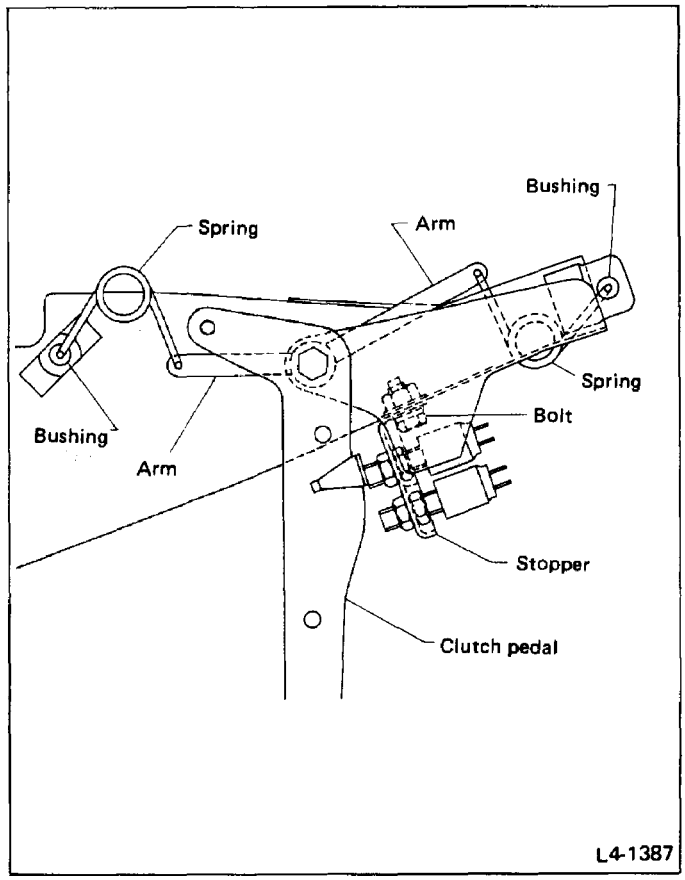

Fig. 17

(5) Remove spring-hook from bushing.

(6) Remove two bolts which hold pedal switch stopper, and detach stopper.

(7) Remove clutch pedal.

2) Installation

(1) Apply a coat of grease to frictional/movable sections of spring bushing and install spring.

(2) Hold clutch pedal to lever.

(3) Install pedal switch stopper.

(4) Connect clutch cable. (Apply a coat of grease to clevis pin location.)

(5) Install spring.

(6) Align hole at clutch cable end with clamp hole, and install clamp.

(7) Install trim panel.

(8) Connect clutch cable on transmission side.

(9) Adjust free play of clutch pedal to 10 to 20 mm (0.39 to 0.79 in).

2. Accelerator Cable

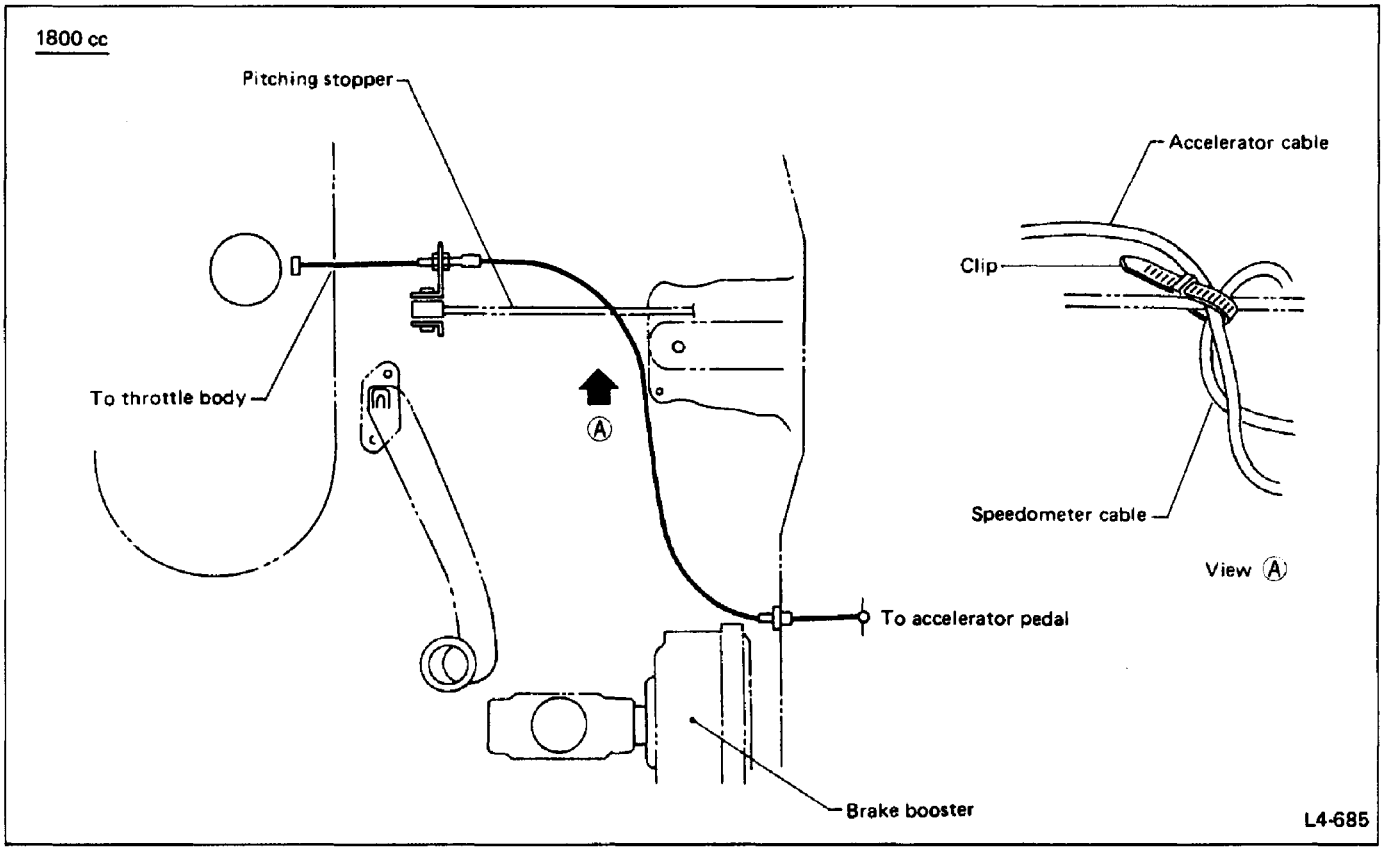

Fig. 18

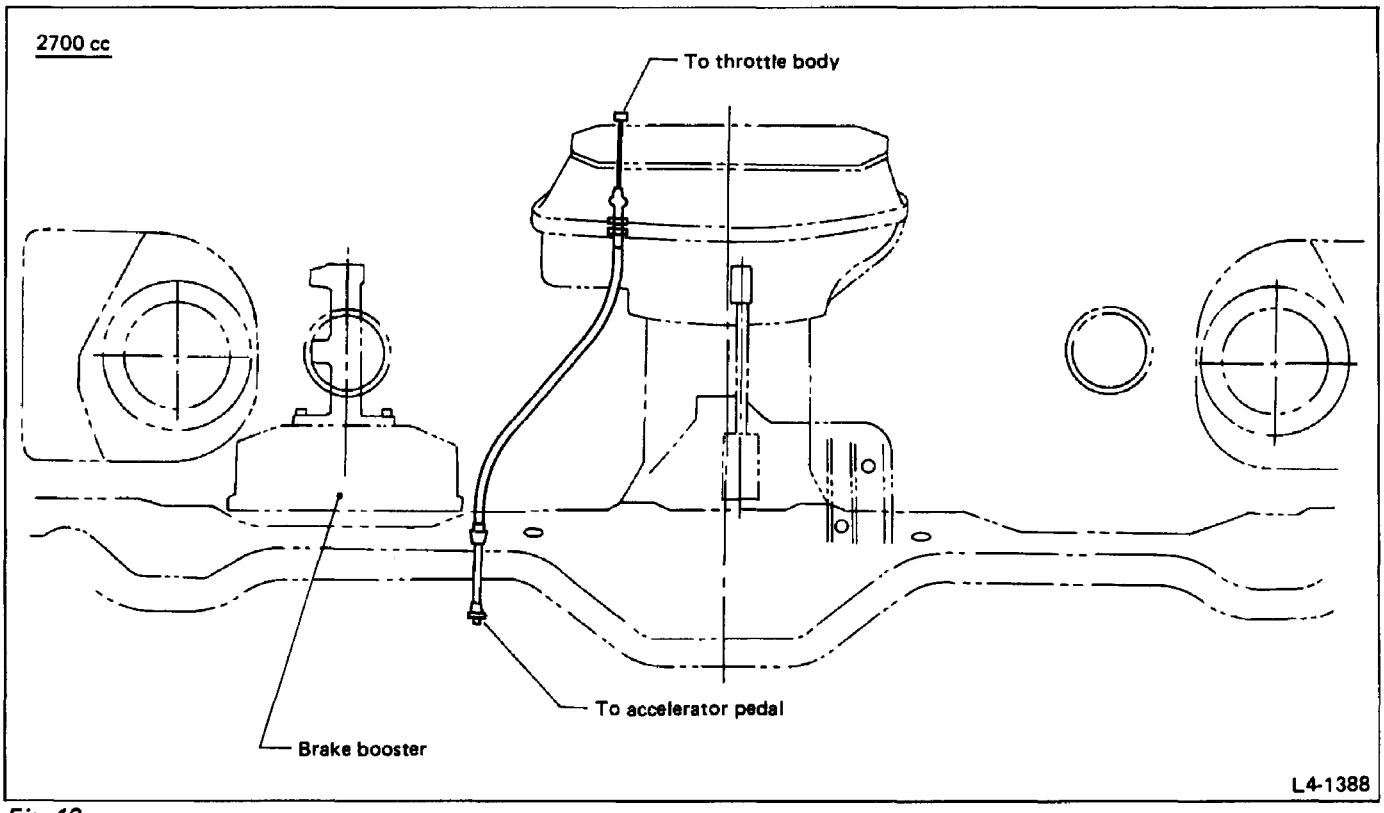

Fig. 19

3. Speedometer Cable

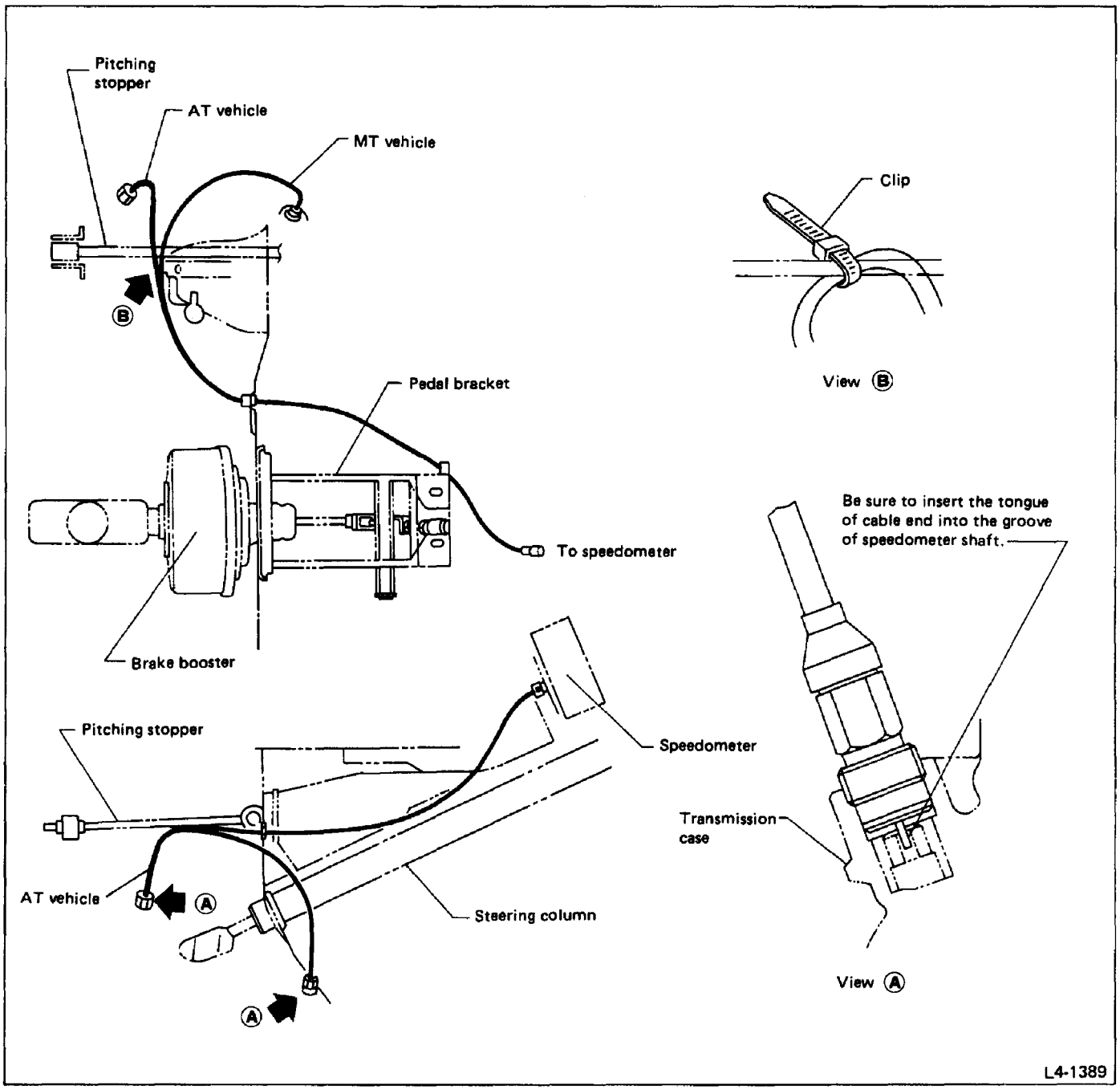

Fig. 20

SUBARU

1988

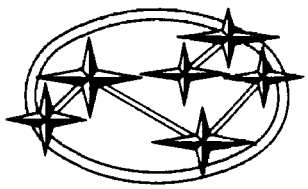

Page

MECHANISM AND FUNCTION 2
- Outline 2
- Control Lever and Switch 4
- Mode Selector Switch and Flow of Air 6
- Electrical System 8

SPECIFICATIONS AND SERVICE DATA 8

COMPONENT PARTS 9

SERVICE PROCEDURE 10
- Heater Unit 10
- Blower Assembly 10
- Heater Control (Control Wing, Temperature Control Lever and Fan Switch Lever) 11

MECHANISM AND FUNCTION

Outline

1) Configuration
The heating and ventilating systems consist of a control unit at wing installed on steering column, heater unit, blower ASSY, heater duct, and heater hoses.

2) Ventilation system
Fresh outside air is introduced into the compartment through the center and side ventilator grilles when the ventilator fan is operated.

3) Heating system
A high performance heater system is adopted. All models are equipped with the front side window defroster.

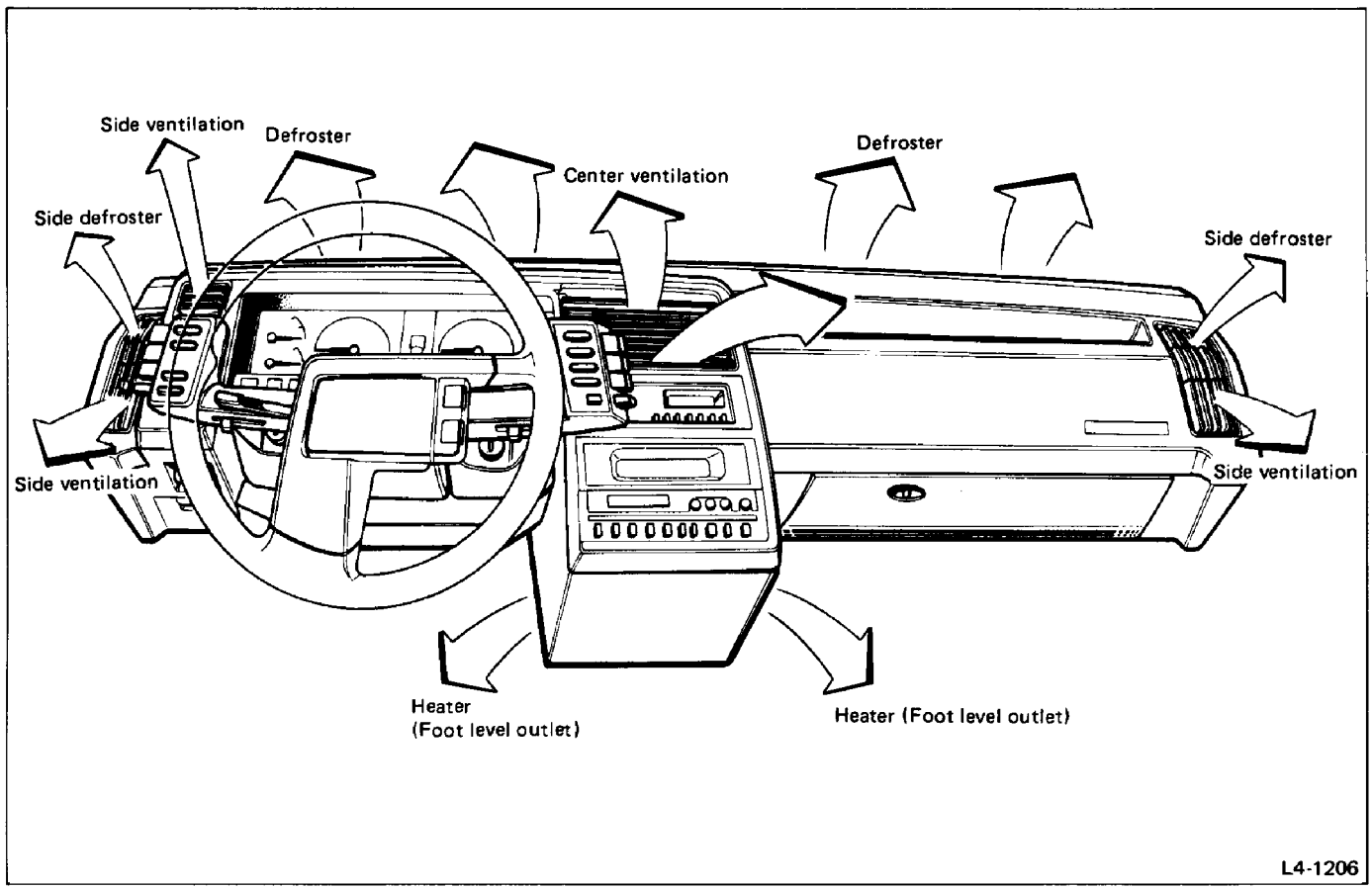

Fig. 1

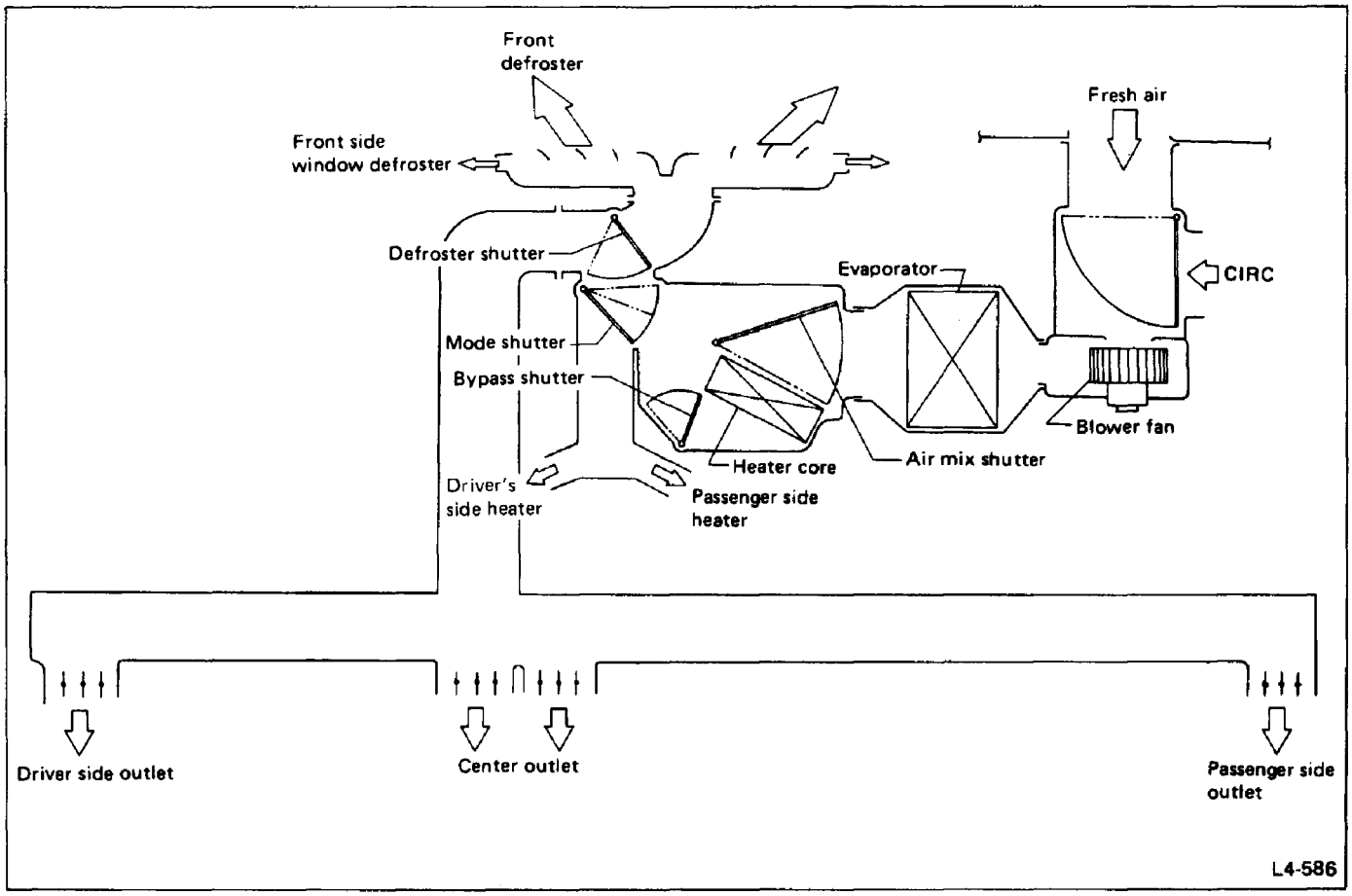
Front
defroster
Front side
window defroster
Fresh air
Defroster shutter
Evaporator
CIRC
Mode shutter
Bypass shutter
Blower fan
Heater core
Air mix shutter
Driver's
side heater
Passenger side
heater
Driver side outlet
Center outlet
Passenger side
outlet
L4-586

Fig. 2

Control Lever and Switch

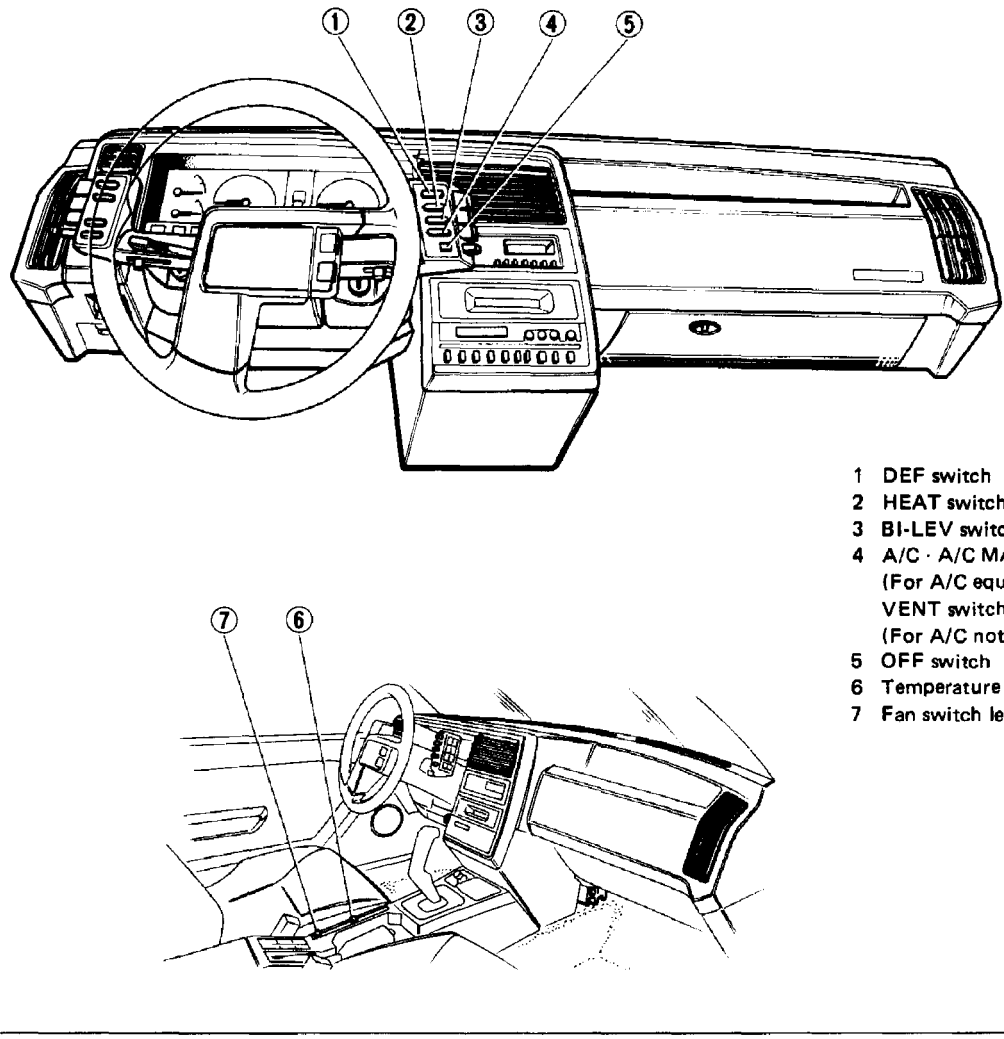

Fig. 3

A. Mode selector switch

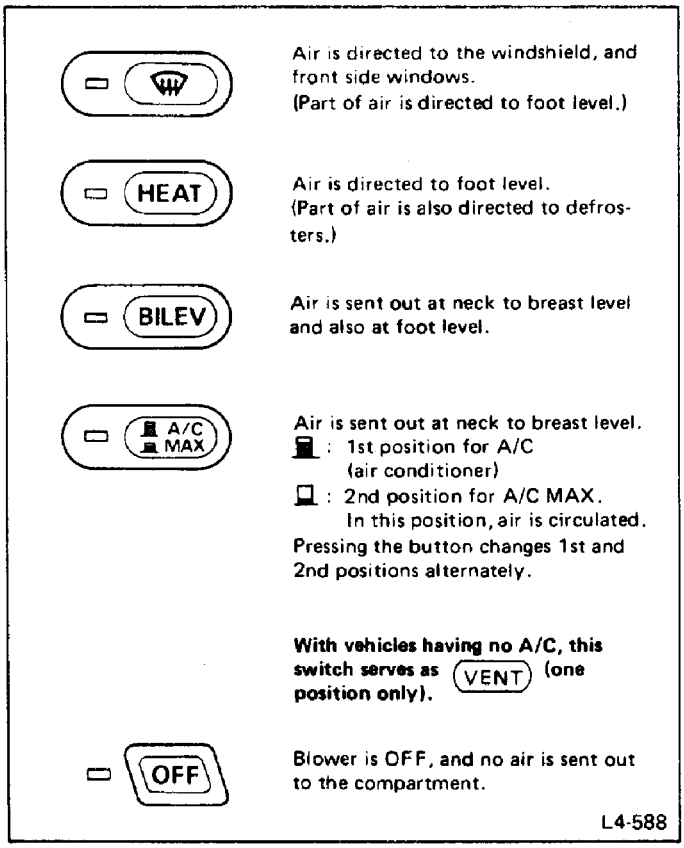

Fig. 4

B. Temperature control lever

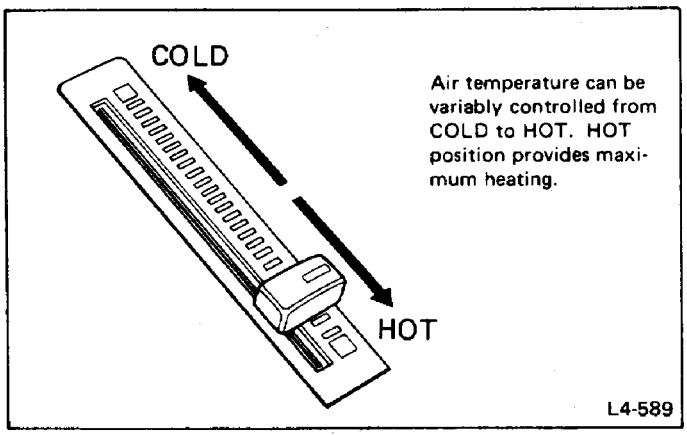

Fig. 5

C. Fan switch lever

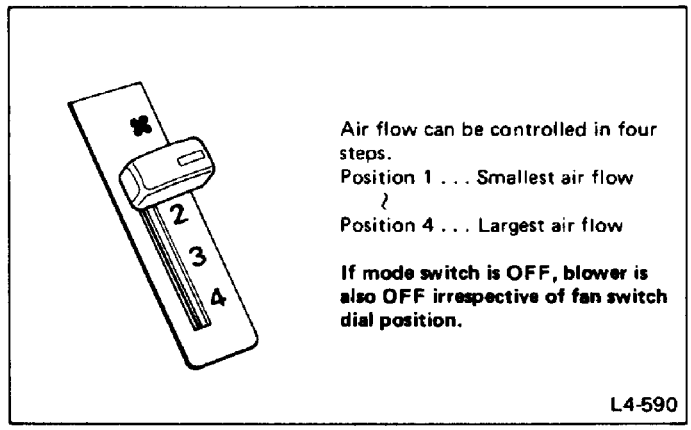

Fig. 6

Mode Selector Switch and Flow of Air

Mode selector switch position	Position of other levers and switches	Flow of air
DEF	• Temperature control lever HOT • Fan switch lever 1st to 4th position	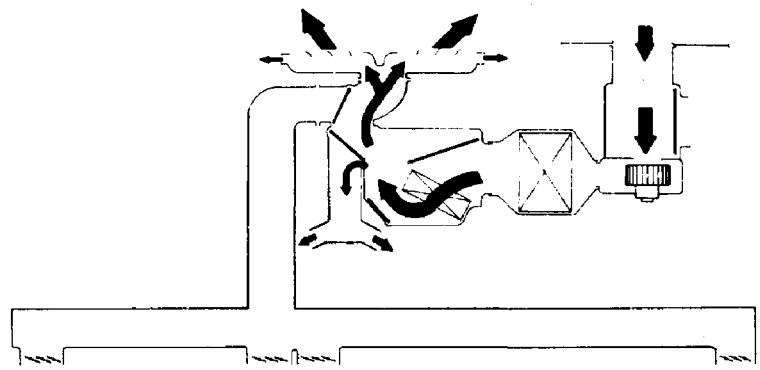 Fig. 7 L4-591
HEAT	• Temperature control lever HOT • Fan switch lever 1st to 4th position	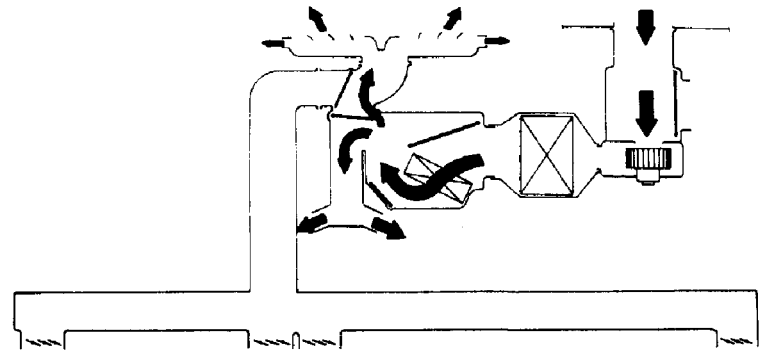 Fig. 8 L4-592
BI-LEV.	• Temperature control lever COLD to HOT • Fan switch lever 1st to 4th position	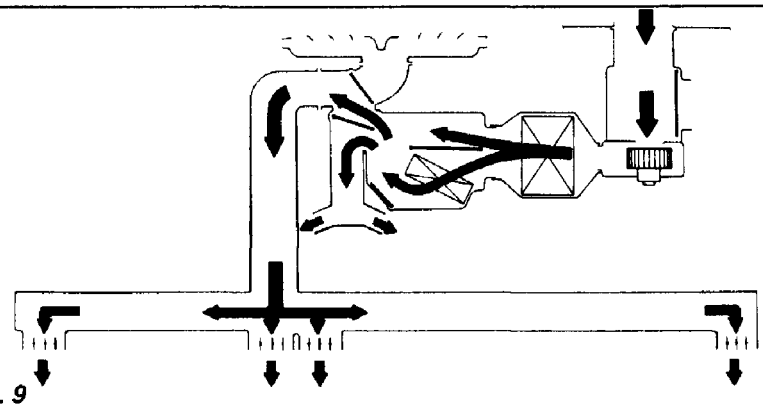 Fig. 9 L4-593
A/C	• Temperature control lever COLD to HOT • Fan switch lever 1st to 4th position	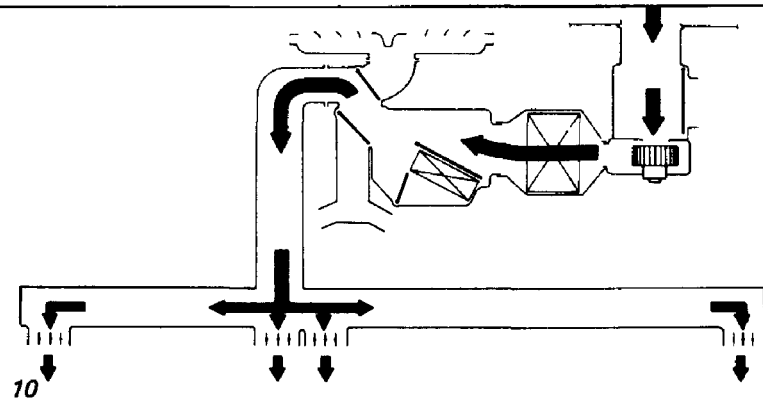 Fig. 10 L4-594

Mode selector switch position	Position of other levers and switches	Flow of air
A/C MAX	• Temperature control lever COLD • Fan switch lever 1st to 4th position	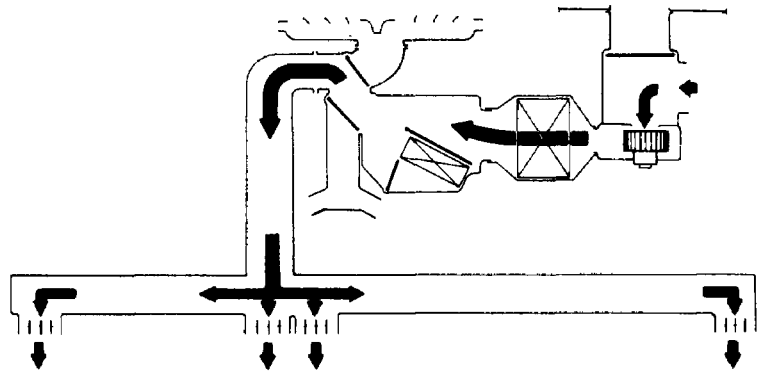 *Fig. 11* L4-595
OFF	• Temperature control lever COLD • Fan switch lever Blower is OFF irrespective of level position.	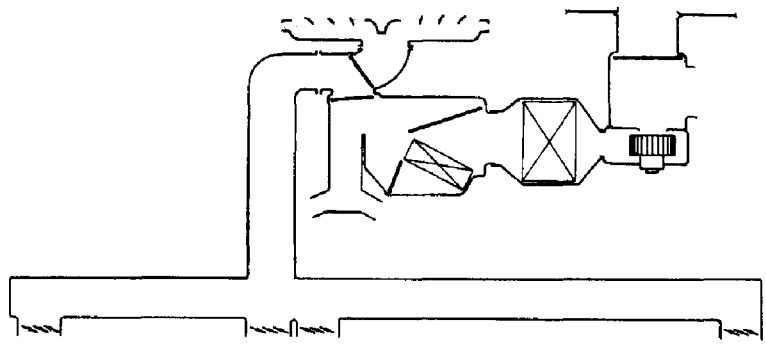 *Fig. 12* L4-596
VENT (Model without A/C)	• Temperature control lever COLD to HOT • Fan switch lever 1st to 4th position	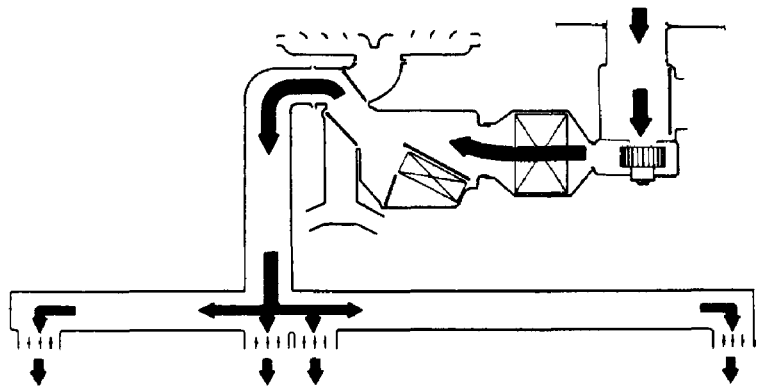 *Fig. 13* L4-597

Electrical System

An electrical system is adopted in the heater control, and is used to open or close the mode selector shutter and internal/external air selector shutter by utilizing an electrical motor.

SPECIFICATIONS AND SERVICE DATA

SPECIFICATIONS

Item		Specifications	Condition
Heating capacity		4.536 kW (3,900 kcal/h, 15,475 BTU/h)	• Temperature difference between hot water and inlet air: 65°C (149°F) • Hot water flowing volume: 360ℓ/h (95.1 US gal/h, 79.2 Imp gal/h)
Air flow volume		330 m^3/h (11,700 cu ft/h)	–
Fan	diameter x width	140 x 65 mm (5.51 x 2.56 in)	–
Fan motor		200W	at 12.8V magnet motor
Heater core size (length x width x thickness x fin pitch)		200 x 159.5 x 32 x 2.0 mm (7.87 x 6.28 x 1.26 x 0.08 in)	–

COMPONENT PARTS

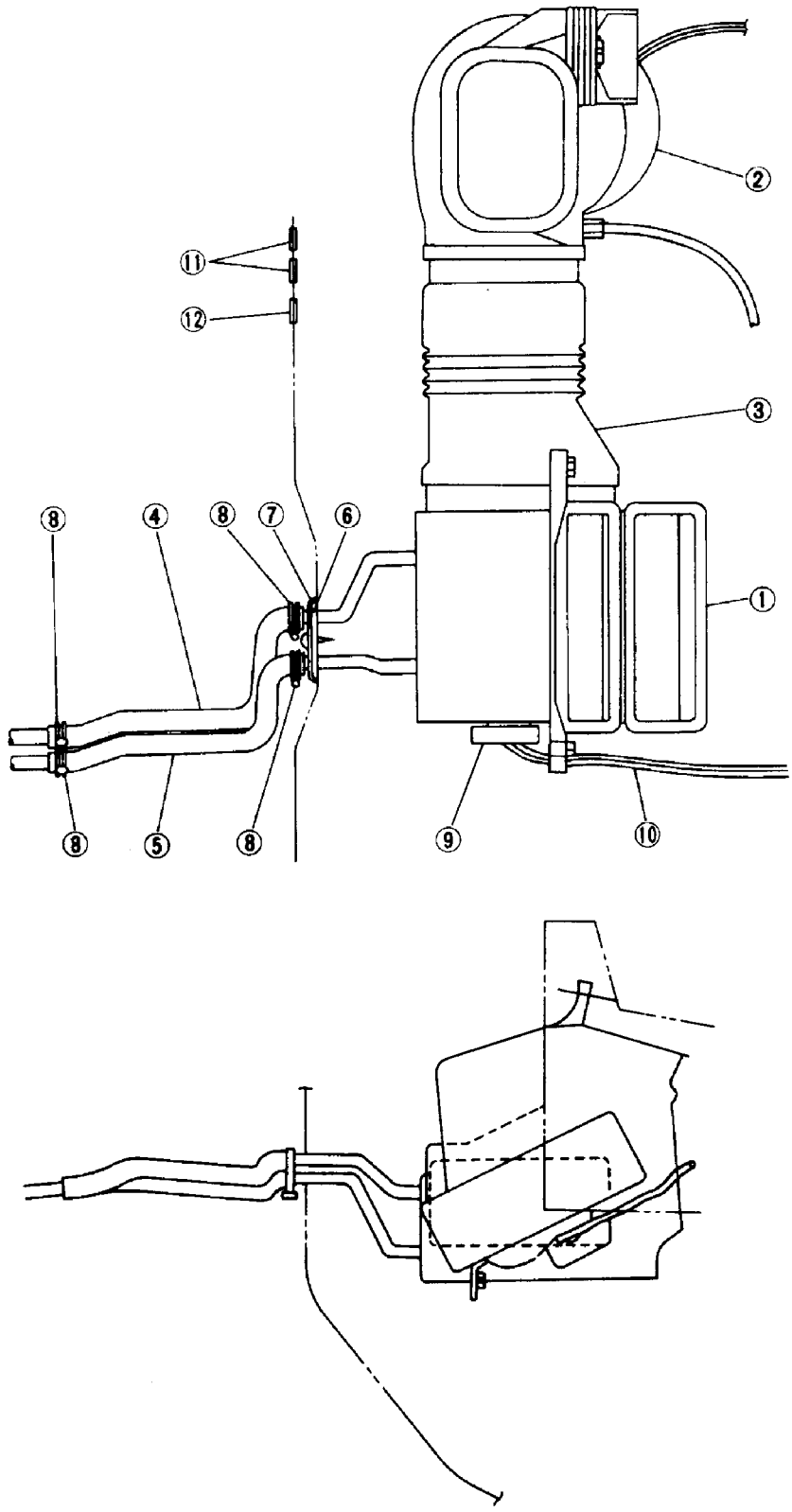

Fig. 14

L4-598

SERVICE PROCEDURE

Heater Unit

REMOVAL

1) Remove heater hoses (inlet, outlet) in engine compartment.

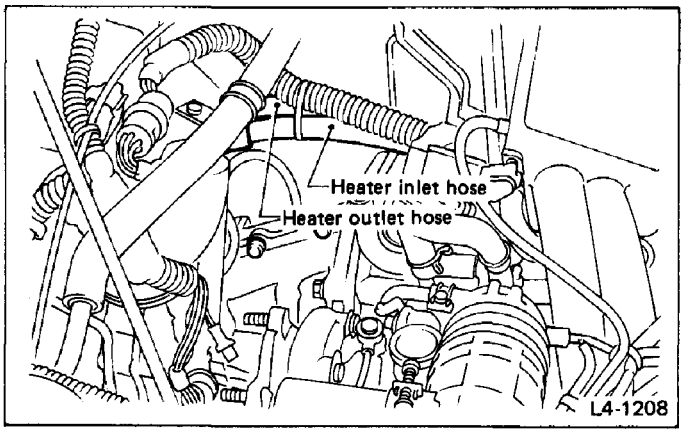

Fig. 15

Drain as much coolant from heater unit as possible, and plug heater pipes with cloth.

2) Remove instrument panel. (Refer to chapter "INSTRUMENT PANEL".)
3) Disconnect connector of harness coming from motor and temperature control cable.

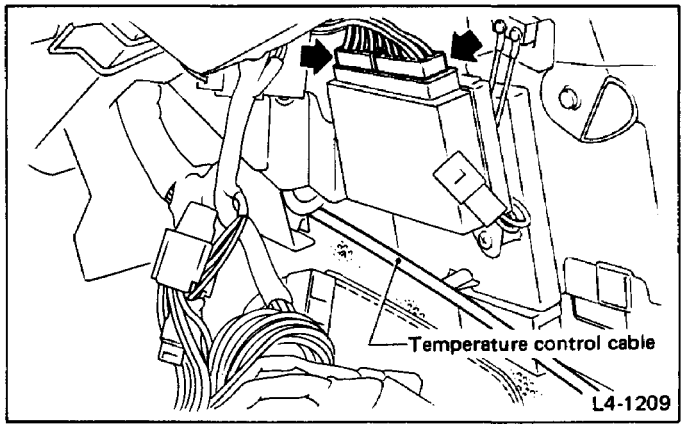

Fig. 16

4) Remove heater unit.

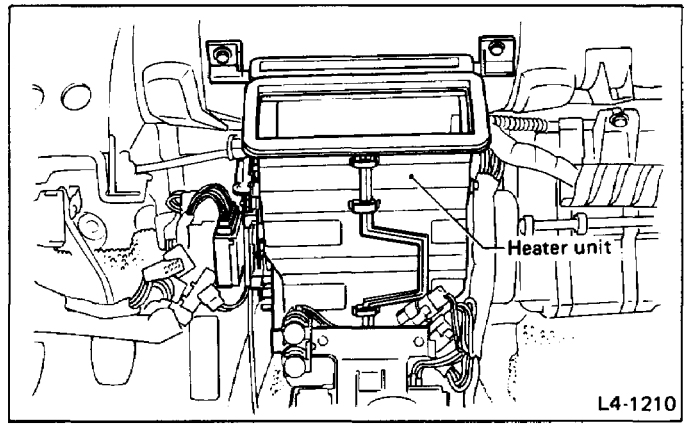

Fig. 17

INSTALLATION

Installation is in the reverse order of removal procedures.

a. Fitting length of heater hose to pipe is 20 to 25 mm (0.79 to 0.98 in).
b. Heater unit mounting bolt tightening torque: 5.4 to 9.3 N·m (0.55 to 0.95 kg-m, 4.0 to 6.9 ft-lb).

Blower Assembly

REMOVAL

1) Remove lower cover on passenger's side.
(Refer to chapter "INSTRUMENT PANEL".)
2) Remove pocket.
(Refer to chapter "INSTRUMENT PANEL".)
3) Remove heater duct (or separate evaporator from blower ASSY for air conditioner equipped vehicle).
4) Disconnect motor harness and resistor harness.

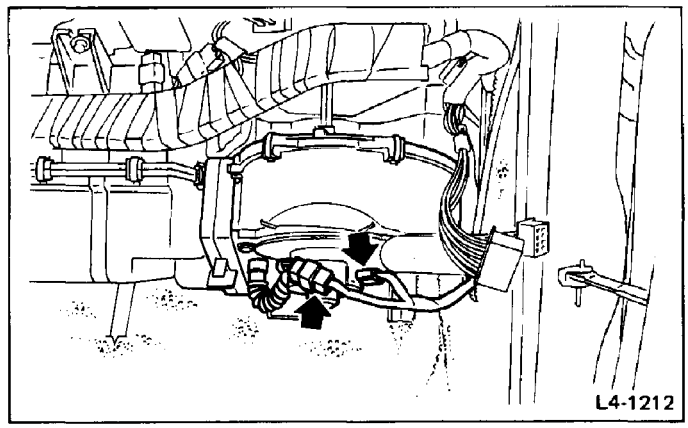

Fig. 18

5) Remove blower ASSY.

INSTALLATION

Installation is in the reverse order of removal procedures.

Blower ASSY mounting bolt and nuts tightening torque: 5.4 to 9.3 N·m (0.55 to 0.95 kg-m, 4.0 to 6.9 ft-lb).

Heater Control (Control Wing, Temperature Control Lever and Fan Switch Lever)

Control Wing

REMOVAL

1) Remove screws which hold lower instrument cover.
2) Remove screws which hold column cover.
3) Remove screws which hold combination switch to control wing bracket.

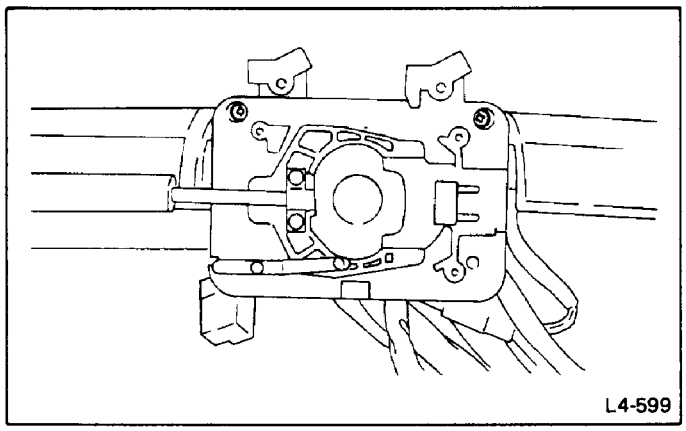

Fig. 19

4) Remove clips which hold harness to lower section of meter.
5) Remove holddown band which holds harness to steering column.
6) Remove bolts which hold control wing, and detach control wing.

INSTALLATION

To install, reverse removal procedures.

a. Be sure harnesses are not forcibly pulled or caught in parts.
b. After installing parts, check to be sure both tilt and telescopic mechanisms operate properly.

Temperature Control Lever and Fan Switch Lever (Both parts are installed on the same base.)

REMOVAL

1) Remove console box.
(Refer to "Removal" of console box.)
2) Remove each knob of "Temperature Control Lever and Fan Switch Lever" respectively.
3) Remove screws to take out "Temperature Control Lever and Fan Switch Lever" as a unit.

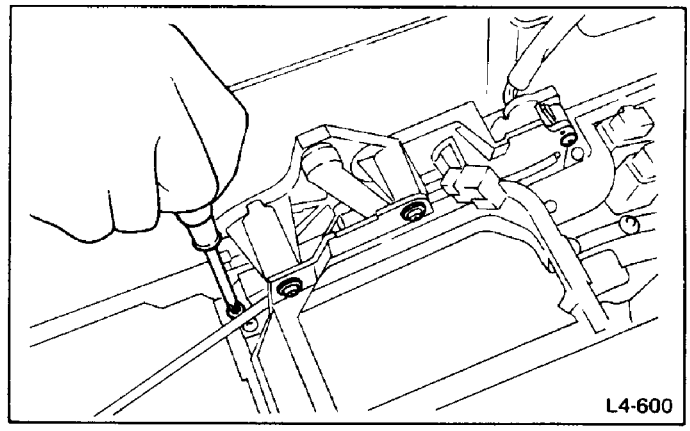

Fig. 20

INSTALLATION

Reverse the order of "Removal".

Temperature control cable is preset at factory. Do not remove it from base.

AIR CONDITIONING SYSTEM

4-7

SUBARU

1988

	Page
MECHANISM AND FUNCTION	2
Electrical System	2
F.I.C.D.	4
Belt Protection System	4
SPECIFICATIONS	5
COMPONENT PARTS	7
Air Conditioner System	7
Evaporator	8
Compressor, Fan and Belt	9
Compressor Components	10
SERVICE PROCEDURE	11
On-Car Service	11
Compressor	23
Condenser	35
Receiver Drier	36
Evaporator	37
Condenser Fan Assembly	38
Flexible Hose	38
Relay and Fuse	39
Pressure Switch	40
Microswitch	40
Pulser Amplifier	41
TROUBLESHOOTING	42

REMARKS:

The description for air-conditioning system in this chapter pertains only to the SUBARU AIR-CONDITIONING SYSTEM that is installed as original equipment by the manufacturer (FUJI HEAVY INDUSTRIES, LTD.).

MECHANISM AND FUNCTION

ELECTRICAL SYSTEM

1) When the mode control switch is set at "A/C. MAX", "A/C", or "DEF", the air conditioner switch (microswitch) will be turned on. In this condition, when the blower switch is turned on, the blower relay and air conditioner relay will activate. This in turn causes the blower motor, fast idle solenoid (FICD) and compressor clutch to activate.
2) In addition, activating the pressure switch (main fan control) or the thermo switch will cause the main fan to activate.
3) When either the triple switch or the thermostat activates, all air conditioner circuits except the blower motor will deactivate. In this condition, however, when the temperature of the coolant in the radiator is high enough and the thermo switch turns on, the radiator fan (main fan) will activate.
4) When refrigerant pressure exceeds the specified value with the A/C switch to ON, the main fan will activate to help cool the condenser.
5) Electrical system is also used to open or close the mode selector shutter and internal/external air selector shutter by utilizing the electrical motor.

Wiring Harness Installation and Electrical Device

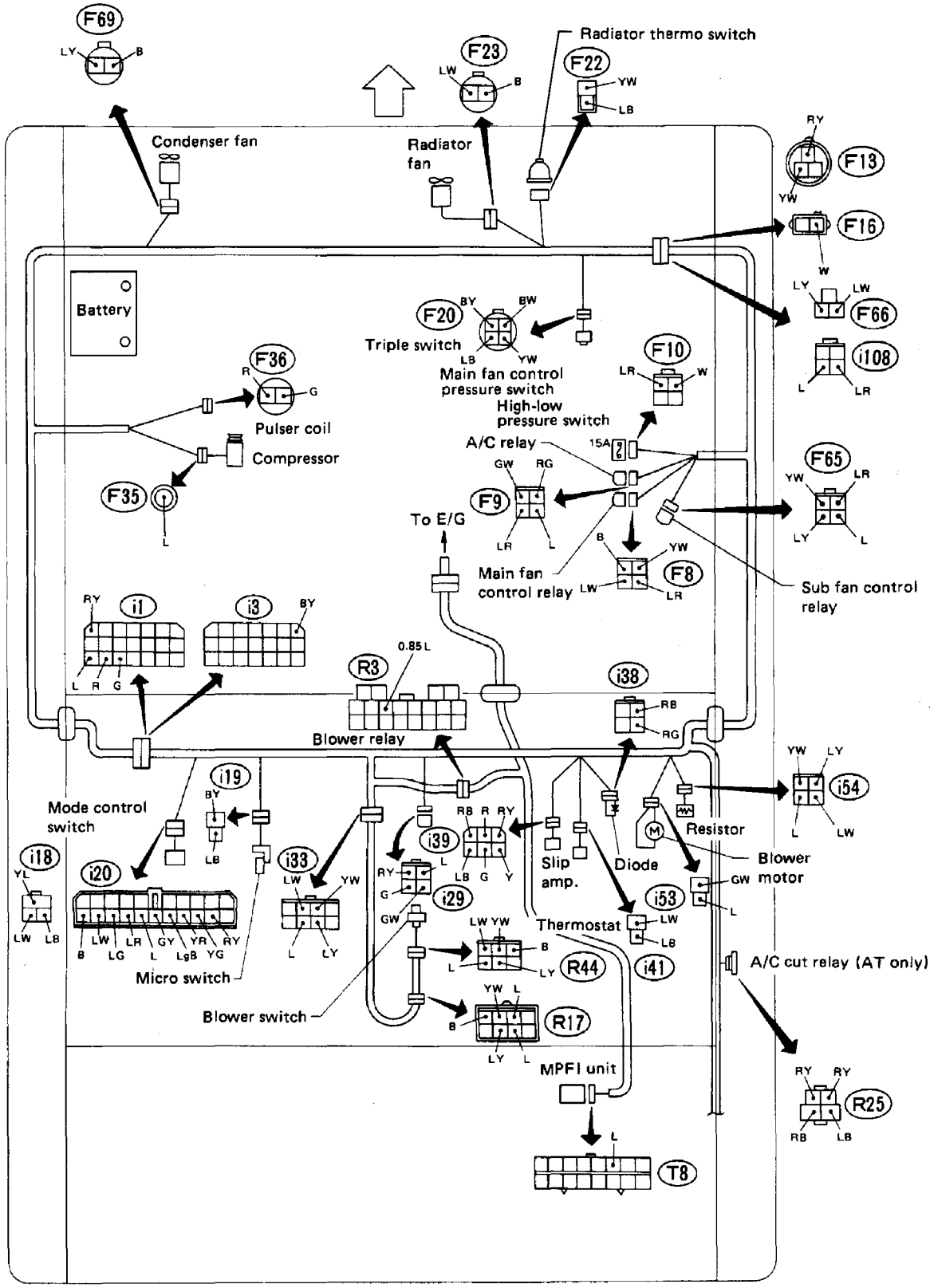

Fig. 1

L4-1520

F.I.C.D.

F.I.C.D. is of the solenoid valve type incorporated into throttle body. It operates when the air conditioner switch is turned on. Idle speed need not be adjusted.

Idle speed with F.I.C.D. in operation:
850 ± 50 rpm

BELT PROTECTION SYSTEM

General

Whenever the compressor rpm drops below the specified value, the belt protection system quickly turns off the magnet clutch of compressor and operations of alternator, water pump and power steering oil pump are kept normal. Disengagement of the clutch causes the compressor pulley to rotate freely so that belt is not broken.

Operation

In the system as shown in figure, while compressor is operating, the ratio of compressor rpm to engine rpm is monitored by a pulser amplifier. When compressor rpm drops more than 20 to 25% below the normal rpm, the system judges as if compressor is "locked" and turns off the magnet clutch of compressor.

Once the system defects a "locked" compressor, the magnet clutch remains off until the air conditioner switch is turned off and turned on again.

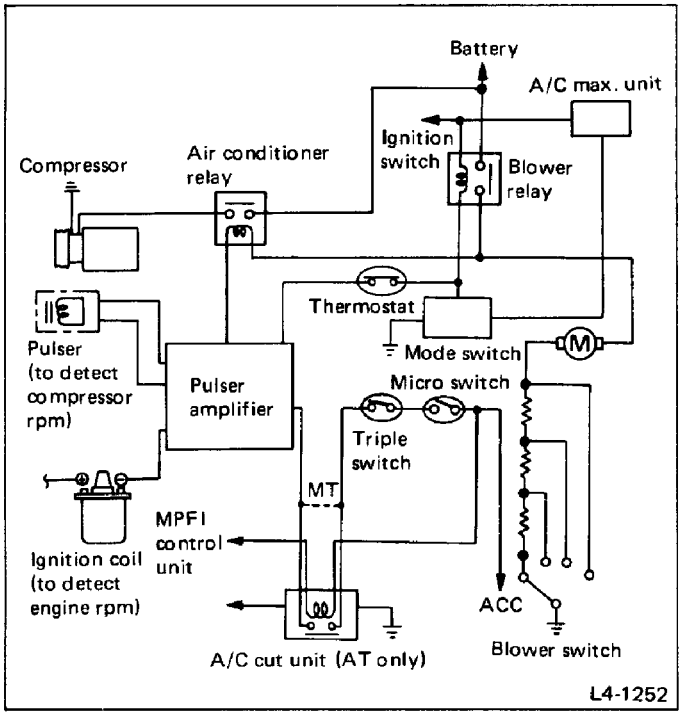

Fig. 2

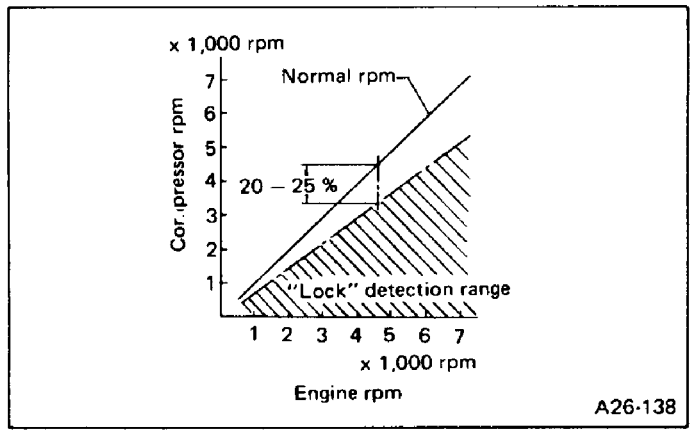

Fig. 3 Characteristic curves of "lock" detection

SPECIFICATIONS

Type of air conditioner		Reheat air mix type
Standard cooling efficiency (IMACA)		5,001 kW (4,300 kcal/h, 17,062 BTU/h)
Refrigerant		R-12 (CCL_2F_2) [0.74 – 0.79 kg (1.63 – 1.74 lb)]
Compressor	Type	Swash plate type MJS170-6DY
	Discharge	170 cm^3 (170 cc, 10.37 cu in)/rev.
	Max. permissible speed	7,500 rpm
Magnet clutch	Type	Dry, single-disc type PMC140-1PJ
	Power consumption	40 W
	Type of belt	Poly V type
	Pulley dia. (effective dia.)	122 mm (4.80 in)
	Pulley ratio	1.11
Condenser	Type	Corrugated fin type
	Front area	0.142 m^2 (1.53 sq ft)
	Core thickness	26 mm (1.02 in)
	Radiation area	3.43 m^2 (36.9 sq ft)
Receiver dryer	Effective inner capacity	420 cm^3 (420 cc, 25.63 cu in)
Expansion valve	Type	Automatic temperature control, internal pressure-balance type
Evaporator	Type	Corrugated fin type
	Dimensions (W x H x T)	101.3 x 170 x 230 mm (3.99 x 6.69 x 9.06 in)
Blower fan	Fan type	Sirocco fan type
	Outer diameter x width	140 x 65 mm (5.51 x 2.56 in)
	Power consumption	230 W at 12 V
Condenser fan (Sub fan)	Motor type	Magnet type
	Power consumption	140 W at 12 V
	Fan outer diameter	280 mm (11.02 in)
Radiator fan (Main fan)	Motor type	Magnet type
	Power consumption	140 W at 12 V
	Fan outer diameter	340 mm (13.39 in)
Idling speed with F.I.C.D. in operation		850 ± 50 rpm
Low-pressure-switch working pressure		196 ± 20 kPa (2.0 ± 0.2 kg/cm^2, 28 ± 2.8 psi) ON → OFF 206 ± 29 kPa (2.1 ± 0.3 kg/cm^2, 30 ± 4 psi) OFF → ON

High-pressure-switch working pressure	2,648 ± 196 kPa (27.0 ± 2.0 kg/cm^2, 384 ± 28 psi) ON → OFF DIFF 588 ± 196 kPa (6 ± 2 kg/cm^2, 85 ± 28 psi)
Pressure switch (Main fan control)	1,569 ± 127 kPa (16.0 ± 1.3 kg/cm^2, 228 ± 18 psi) OFF → ON 1,275 ± 147 kPa (13.0 ± 1.5 kg/cm^2, 185 ± 21 psi) ON → OFF

COMPONENT PARTS

Air Conditioner System

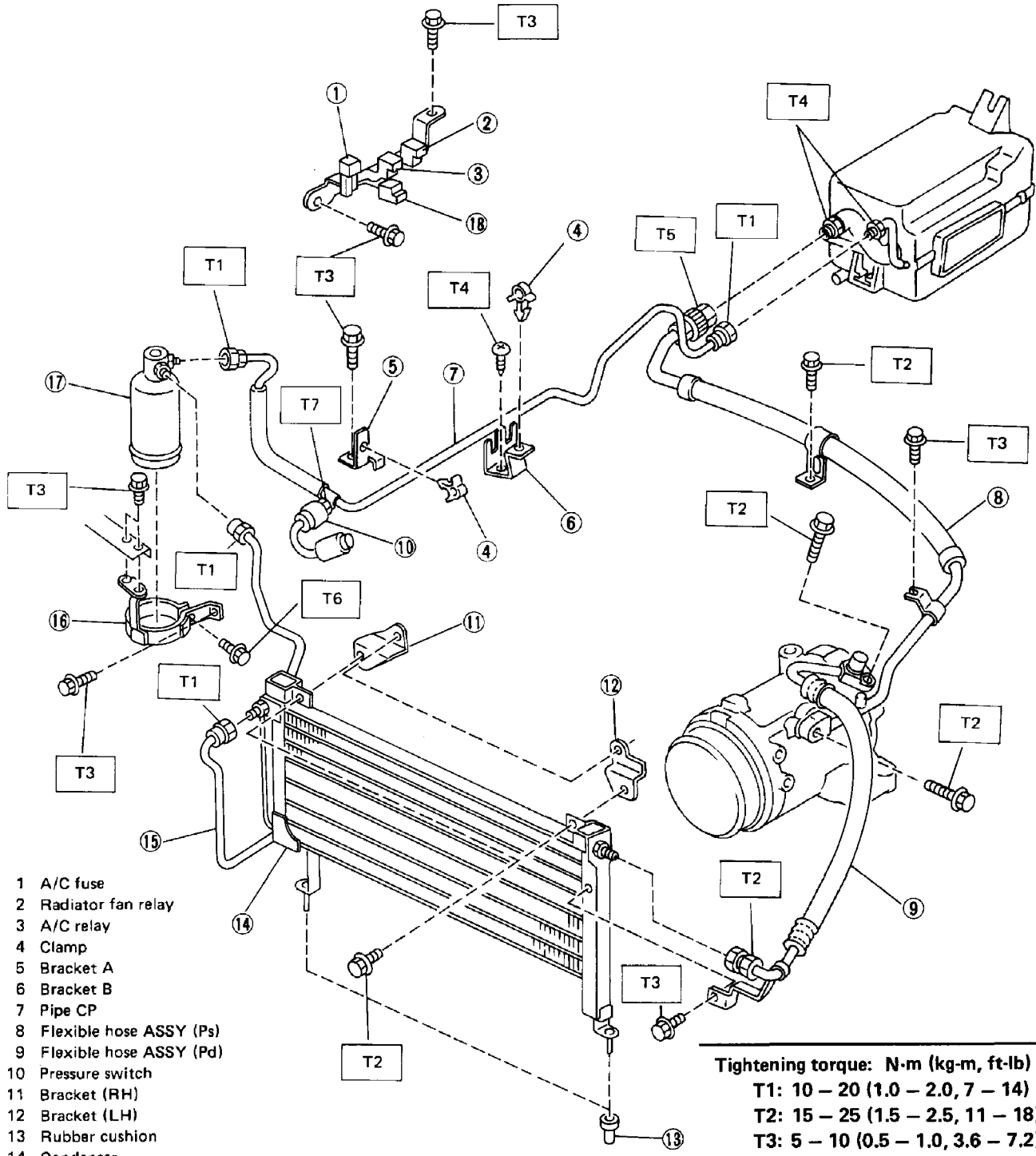

1 A/C fuse
2 Radiator fan relay
3 A/C relay
4 Clamp
5 Bracket A
6 Bracket B
7 Pipe CP
8 Flexible hose ASSY (Ps)
9 Flexible hose ASSY (Pd)
10 Pressure switch
11 Bracket (RH)
12 Bracket (LH)
13 Rubber cushion
14 Condenser
15 Pipe CP
16 Bracket
17 Receiver drier
18 Condenser fan relay

Tightening torque: N·m (kg-m, ft-lb)
T1: 10 – 20 (1.0 – 2.0, 7 – 14)
T2: 15 – 25 (1.5 – 2.5, 11 – 18)
T3: 5 – 10 (0.5 – 1.0, 3.6 – 7.2)
T4: 3 – 6 (0.3 – 0.6, 2.2 – 4.3)
T5: 20 – 29 (2.0 – 3.0, 14 – 22)
T6: 5.4 – 8.3 (0.55 – 0.85, 4.0 – 6.1)
T7: 15 – 18 (1.5 – 1.8, 11 – 13)

L4-1522

Fig. 4

Evaporator

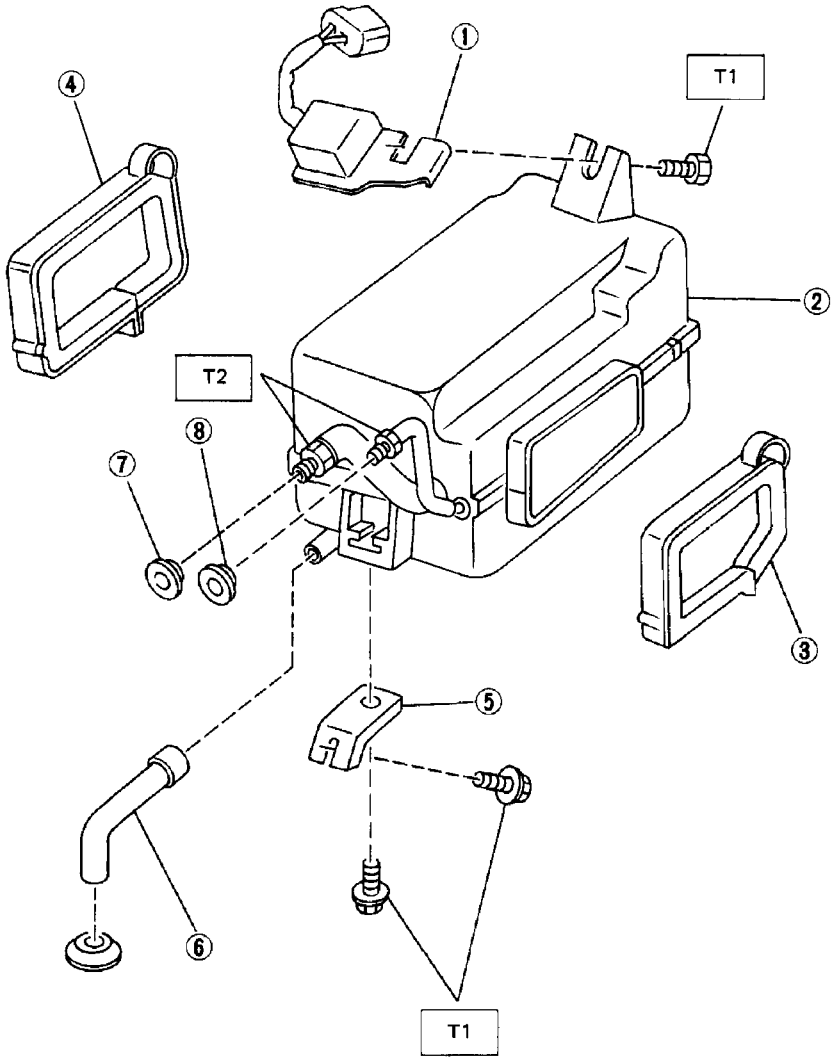

1 Pulser amplifier
2 Evaporator
3 Heater band ASSY
4 Blower band ASSY
5 Bracket
6 Drain hose
7 Grommet (Ps)
8 Grommet (Pd)

Tightening torque: N·m (kg-m, ft-lb)
T1: 5 – 10 (0.5 – 1.0, 3.6 – 7.2)
T2: 3 – 6 (0.3 – 0.6, 2.2 – 4.3)

Fig. 5

L4-1523

Compressor, Fan and Belt

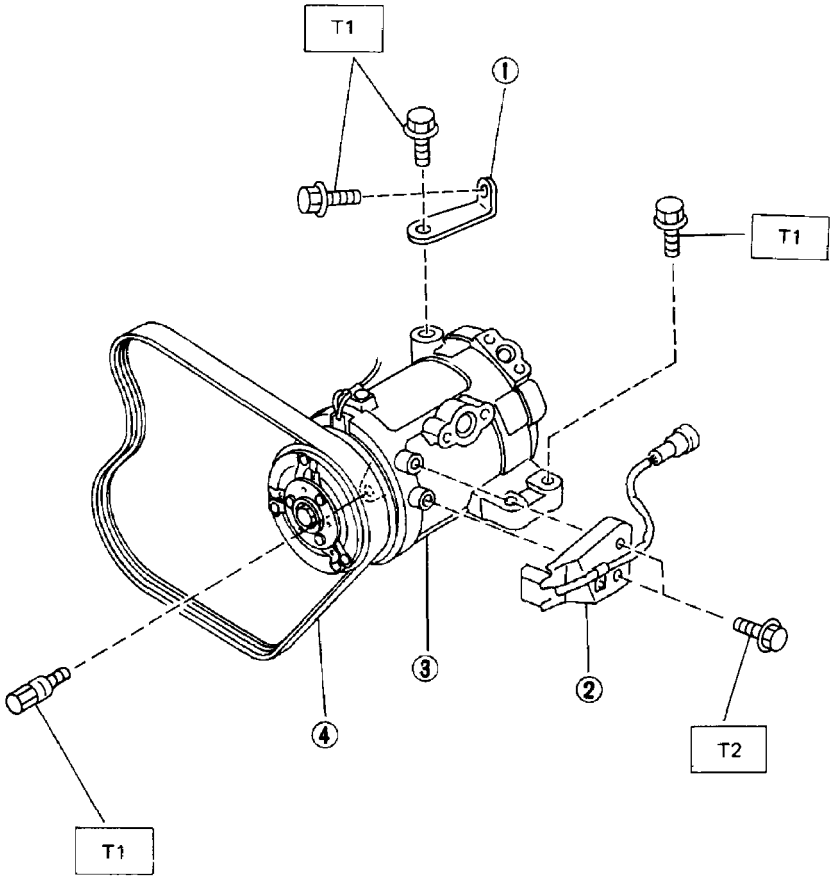

1 Bracket
2 Pulser ASSY
3 Compressor CP
4 V-ribbed belt
5 Washer
6 Rubber cushion
7 Spacer
8 Fan motor ASSY
9 Shroud

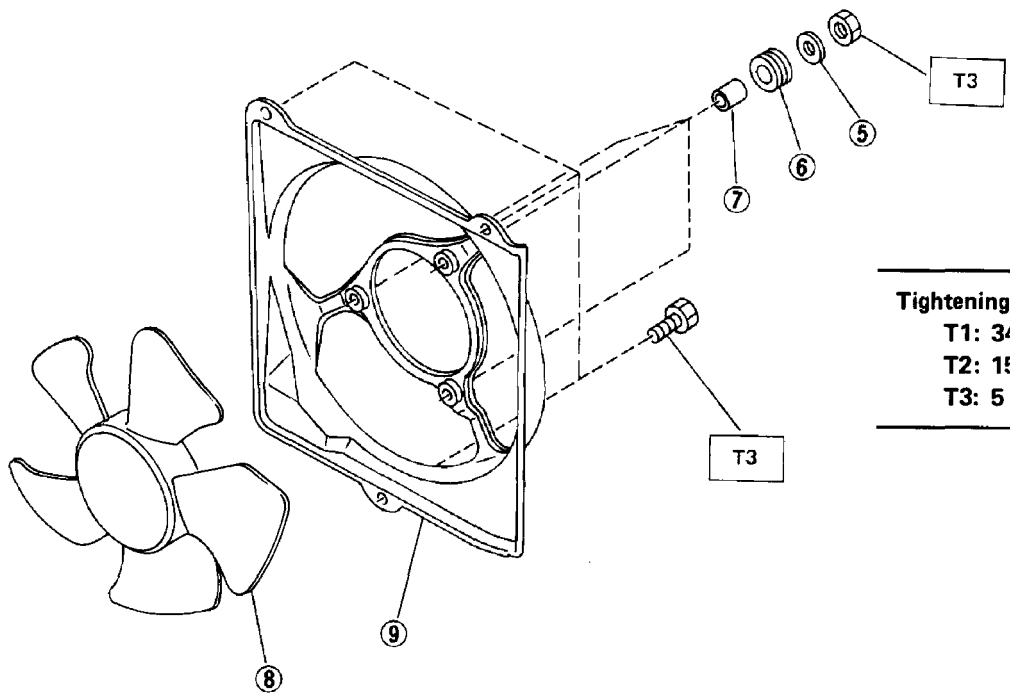

Tightening torque: N·m (kg-m, ft-lb)
T1: 34 – 44 (3.5 – 4.5, 25 – 33)
T2: 15 – 25 (1.5 – 2.5, 11 – 18)
T3: 5 – 10 (0.5 – 1.0, 3.6 – 7.2)

Fig. 6

L4-1524

Compressor Components

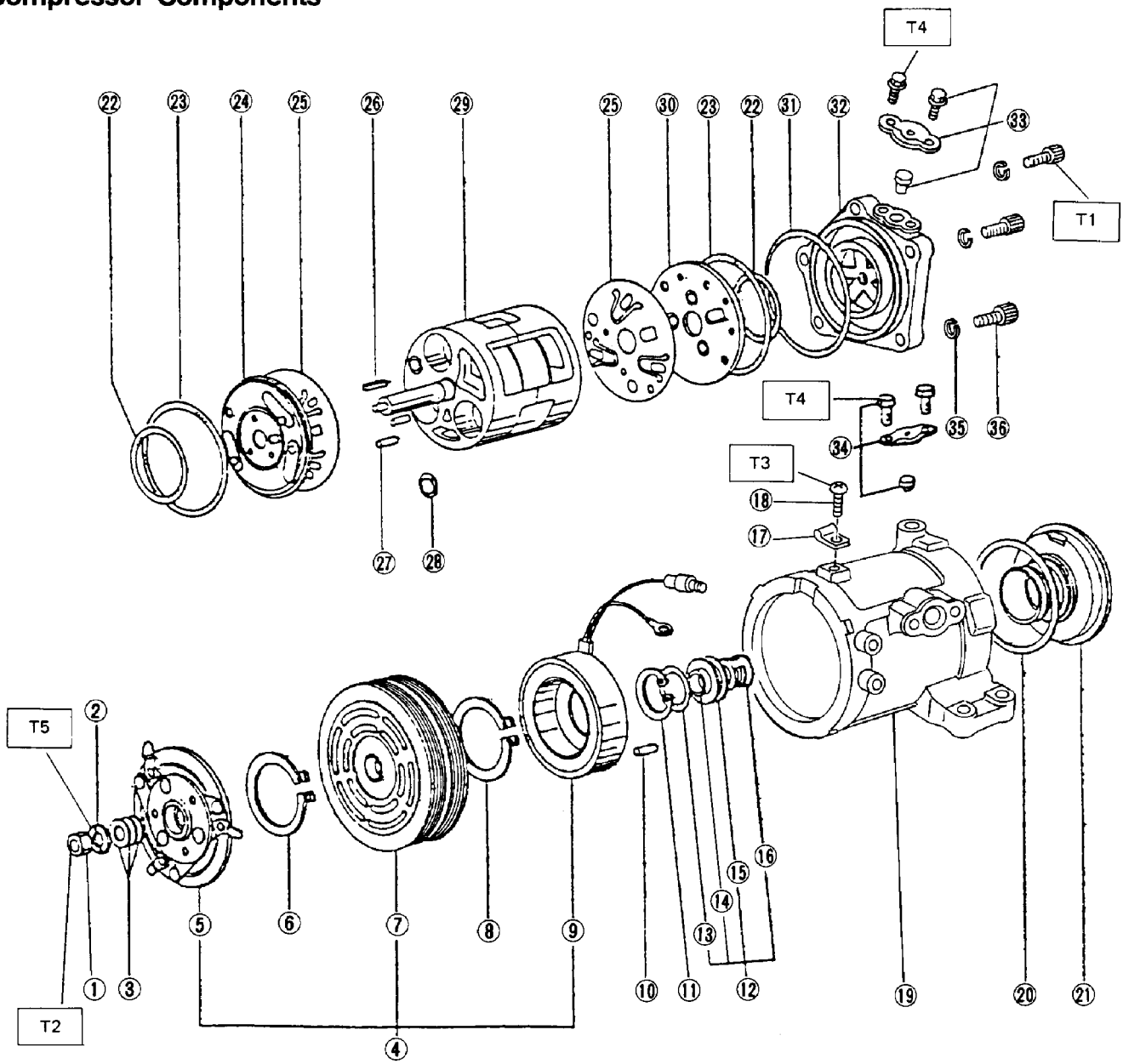

No.	Part name	Bolt type	Tightening torque
T1	Cover end (R) bolt	10 mm x 25 mm socket head bolt	19 – 21 N·m (1.9 – 2.1 kg-m, 14 – 15 ft-lb)
T2	Clutch ASSY nut	8 mm nut	19 – 21 N·m (1.9 – 2.1 kg-m, 14 – 15 ft-lb)
T3	Wire clamping bolt	5 mm x 8 mm screw	2.7 – 3.3 N·m (0.28 – 0.34 kg-m, 2.0 – 2.5 ft-lb)
T4	Seal cover bolt	8 mm x 12 mm flange head bolt	5 – 6 N·m (0.5 – 0.6 kg-m, 3.6 – 4.3 ft-lb)
T5	Hub nut	24 mm x 7.5 mm nut	19 – 21 N·m (1.9 – 2.1 kg-m, 14 – 15 ft-lb)

1 Nut (8 mm)
2 Hub nut
3 Spacer
4 Clutch ASSY
5 Armature
6 Wedge ring (40 mm)
7 Rotor
8 Wedge ring (50 mm)
9 Stator
10 Key
11 Snap ring (32 mm)
12 Shaft seal ASSY
13 O-ring (28 mm)
14 Cover plate
15. Seal ring
16 Shaft seal
17 Wire clamp
18 Screw
19 Shell
20 Shell gasket
21 Cover end (F)
22 O-ring (Cylinder head IN)
23 O-ring (Cylinder head OUT)
24 Cylinder head (F)
25 Suction valve plate
26 Key
27 Knock pin
28 O-ring (12 mm, gas pipe)
29 Compressor cylinder
30 Cylinder head (R)
31 O-ring (Cover end R)
32 Cover end (R)
33 Seal cover set (Delivery)
34 Seal cover set (Suction)
35 Wave washer
36 Socket bolt (10 mm)

Fig. 7

L4-1525

SERVICE PROCEDURE

On-Car Service

REFRIGERANT R-12

The refrigerant used in the air conditioner is generally called "Refrigerant-12 (R-12)". No other refrigerant than the above refrigerant should be used. This refrigerant is usually available in a small can or a cylinder. In either case, it is liquefied under high pressure in the container.

Refrigerant evaporates easily (has a low evaporation point) and, moreover, since the latent heat of the refrigerant is large, it can absorb a large amount of heat when evaporating. Extreme care must be exercised when handling the refrigerant.

COMPRESSOR OIL

The "SUNISO 5GS" refrigeration lubrication should be used to assure the successful compressor operation. Use of oils other than recommended or mixing of the oil with other oils would cause chemical reaction or lead to lowered viscosity or deficient lubrication.

The oil absorbs moisture as it contacts the air. This points out the need for care not to expose it to atmosphere for an extended period of time.

a. The oil should not be transfused from a container into another, as the failure will possibly cause moisture to mix with the oil.
b. The used oil should not be returned into a container.
c. The oil should not be used if its state of preservation is not clear enough.

MAINTENANCE

Periodical maintenance and season-in inspection

Both periodical maintenance and season-in inspection are most essential to enable the air conditioner to give full performance.

Perform the following checks.

1) Start engine and check refrigerant level through sight glass on receiver drier. For details, refer to relative topics under "Refrigerant Level Check".

2) Check the entire system for sign of refrigerant leaks. Refer to relative topics under "Checking for Leaks" and "Refrigerant Leaks".

If any trace of oil is noted at and around connection fittings, it is a sure indication that refrigerant is leaking. This condition can be corrected easily by retightening the joints. If any joint on line is suspected of small amount of leakage, use a leak detector to locate leaking points.

3) Check compressor drive belts for proper deflection.

Season-off

Observe the following maintenance tips to allow the air conditioner to operate normally in the next season.

1) Keep the entire system free from refrigerant leakage by periodically checking for refrigerant gas leak even out of season.

2) Turn the compressor for 10 minutes at least once a month by running the engine at 1,500 rpm.

GENERAL SERVICE INSTRUCTION

The servicing of the air conditioner should be carried out only by well-trained servicemen. This chapter describes essential points of servicing.

- If a large amount of dirt and sand enter the system, they will be carried with refrigerant and may clog the system or scratch rotating parts. This points out the need for care in servicing the system. That is, disconnecting joints should be carried out in a clean place.
- Water should not be allowed to get inside the system. The refrigerant does not readily mix with water. However, the presence of even a minute amount of water will cause a chemical reaction at high temperature which will in turn produce hydrochloric acid (HCl). Since hydrochloric acid is highly corrosive to metals, the aluminum and copper piping, etc. will become corroded and the refrigeration system will become clogged.
- Water in the system will ice the orifice when the high pressure refrigerant is changed to low pressure refrigerant by expansion valve, etc., and will obstruct the refrigerant flow.

SAFETY PRECAUTIONS

1) Since direct contact of the liquid refrigerant with your skin will cause frostbite, always be careful when handling the refrigerant. **Wear gloves or wrap a piece of cloth around service valve to protect your fingers against frostbite by refrigerant.** If any of the refrigerant should get into your eyes when charging the refrigerant, splash your eyes with cool water to raise the temperature gradually. Apply a protective film to the eye to avoid infection. Do not rub your eyes. Consult an eye specialist. **Always wear goggles or glasses to protect your eyes when working around the system. Should refrigerant strike your body, splash on cool water and apply a protective film.**

2) The refrigerant service container has a safe strength. However, if handled incorrectly, it will explode. **Therefore, always follow the instructions on the label. In particular, never store it in a hot location [above 52°C (126°F)] or drop it from a high height.**

3) The refrigerant gas is odorless and colorless and breathing may become difficult due to the lack of oxygen. Since the refrigerant gas is heavier than air and will lay close to the floor, be especially careful when handling it in small, confined spaces.

4) The refrigerant itself is nonflammable. **However, a toxic**

gas (phosgene gas) is produced when it contacts fire and special care is therefore required when checking for leaks in the system with a halide torch.

5) Do not steam clean on the system, especially condenser since excessively high pressure will build up in the system, resulting in explosion of the system.

The above precautions are essential in handling of Refrigerant-12, and their strict observation requires sufficient training. Therefore, it is of first importance that any other personnel than a well-trained serviceman should not be allowed to handle the refrigerant.

EVACUATING AND CHARGING SYSTEM

During servicing, use caution to keep air from getting into refrigerant. When air enters the system, all refrigerant must be evacuated from system prior to charging new refrigerant. Air in refrigerant has the following deleterious effects:

1) Since the condensation temperature of the air is extremely low, the air will not be condensed when refrigerant gas is condensed in the condenser, and the air will thus remain in gaseous form. Consequently, the effective thermal transmission area of condenser for refrigerant gas will be reduced and refrigerant gas to be condensed will be reduced. The pressure rise will become proportional to the volume of the air in system.

2) When air and refrigerant are mixed in system, a chemical reaction will be produced and hydrochloric acid which will adversely affect the aluminum, copper, iron, and other materials in system may be generated.

Handling manifold gauge

The pressure at the high- and low-sides of system should be measured when evacuating and charging refrigerant and when diagnosing trouble in the system. The manifold gauge is used for these purposes. A manifold gauge has two pressure gauges; a low pressure gauge and a high pressure gauge. These gauges are connected to the high- and low-side service valves of system through flexible charging hoses. The construction of manifold gauge is shown in Figure.

When valve stem is fully screwed, the valve is front-seated and valve path and the center path are blocked. When valve stem is backed off, the paths are opened.

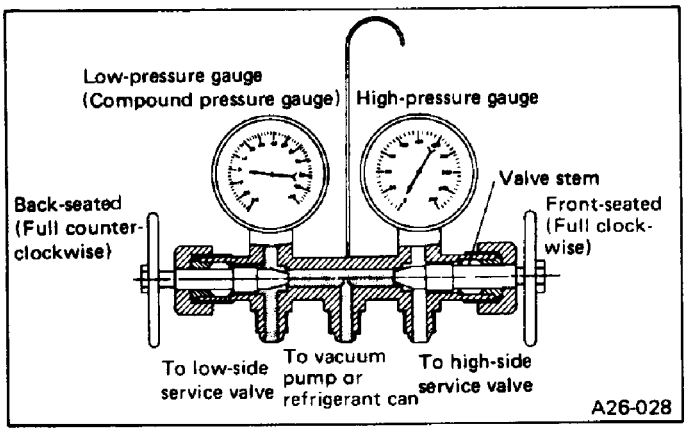

Fig. 8

(Connection to service valve)

1) Fully close both valves of manifold gauge. Connect high- and low-pressure charging hoses to manifold gauge.

2) Remove caps from service valves. Connect high- and low-pressure charging hoses to service valves in system. The refrigerant gas will be discharged since check valve is open when pressing charging hose onto service valve.

3) Next, loosen the connection fitting of charging hose at manifold gauge side for 2 to 3 seconds to purge any air inside charging hose by the pressurized gas in system.

(Disconnection from service valve)

1) Fully close both valves of manifold gauge.

2) Disconnect two charging hoses from service valves. At this time, the gas will be discharged until check valve is closed. Therefore, disconnect hose quickly.

CAUTION:
When working with refrigerant, protect your fingers against frostbite by using gloves or other cloth material.

Handling service valve

An automatic check valve is built into service valve. When this valve presses against the connection fitting, that is, when charging hose is connected to service valve, the valve is open. When charging hose is disconnected, the valve is closed automatically. Always observe the following usage precautions:

1) Always install valve cap after using service valve.

When high speed operation is performed without valve cap, a negative pressure will gradually build up at the low pressure side of system and air may be sucked in. In addition, dirt and dust will easily enter the valve resulting in foreign matter entering the system.

2) Check valve will be half opened during connection and disconnection of charging hoses and refrigerant will be forcefully discharged. Therefore, connect and disconnect charging hoses quickly while pressing flare nut of charging hose against service valve.

CAUTION:
When working with refrigerant, protect your fingers against frostbite by using gloves or other cloth material.

3) Since close contact between the thread of valve cap and the thread of service valve will prevent gas leakage, keep these sections clean and free of scratches and damage.

4) Since packing of charging hose will be lost during long use, always check packing prior to installing charging hose.

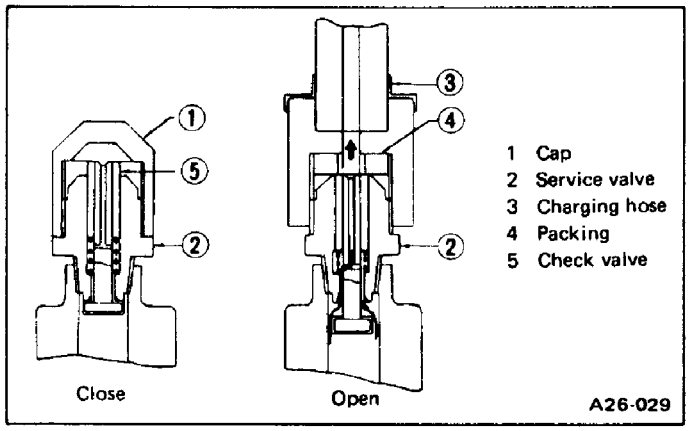

Fig. 9

Handling can tap

A wide variety of can taps are available. The following procedures apply to conventional can taps.
For the correct usage, refer to the manufacturer's instructions.

CAUTION:
Use can tap of good quality.

1) Connect charging hose to the center fitting of manifold gauge. At this time, confirm that both stems are fully turned in (front-seated).
2) Turn can tap handle fully counterclockwise so that the needle is pulled up.
3) Attach can tap to refrigerant can firmly.
4) Turn can tap handle fully clockwise to make a hole in refrigerant can.
5) Turn the handle fully counterclockwise to raise the needle. Refrigerant gas will flow up to the center fitting of manifold gauge.
6) Loosen the connection at the center fitting of manifold gauge for a few seconds to purge air inside charging hose.

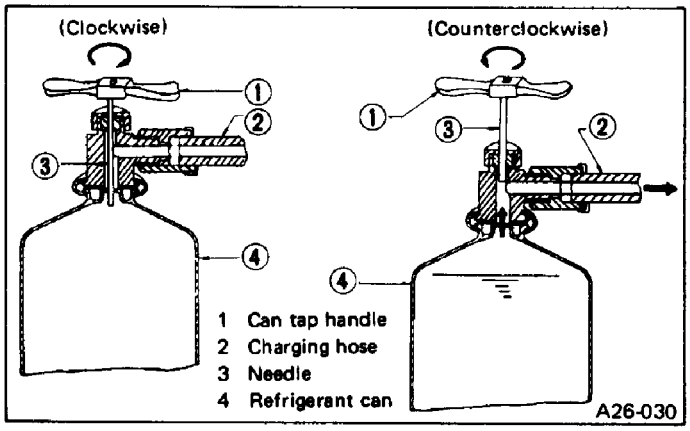

Fig. 10

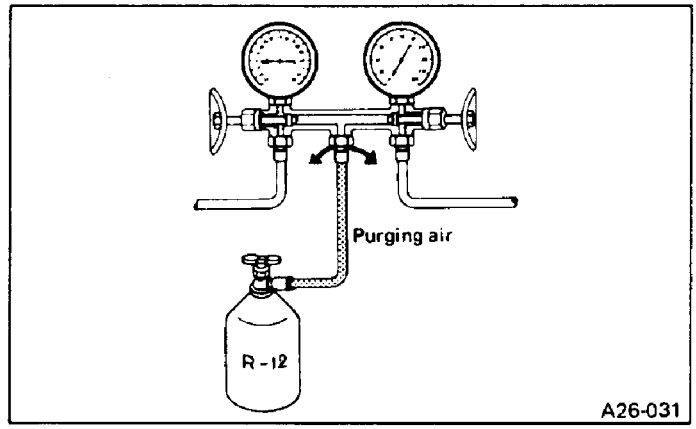

Fig. 11

Discharging system

The pressurized refrigerant gas inside system must be discharged to a pressure approaching atmospheric pressure prior to evacuating refrigerant inside system. This operation should be made to permit safe removal when replacing system components.
1) Close high- and low-pressure valves of manifold gauge fully.
2) Connect two charging hoses of manifold gauge to their respective service valves.
3) Open both manifold gauge valves slightly and slowly discharge refrigerant from system.

Do not allow refrigerant to rush out. Otherwise, compressor oil will be discharged along with refrigerant.

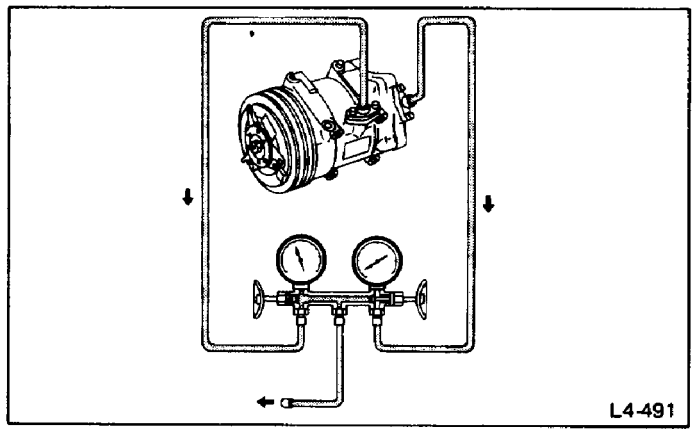

Fig. 12

CAUTION:
When connecting the charging hose to the service valve or disconnecting it therefrom, protect your fingers against frostbite by using gloves or other cloth material.

Evacuating system

1) Connect high- and low-pressure charging hoses of manifold gauge to their respective service valves of system and

discharge refrigerant from system. Refer to "Discharge System".

2) When refrigerant has been discharged to a pressure approaching atmospheric pressure, connect center charging hose to a vacuum pump.

3) Close both valves of manifold gauge fully. Then start vacuum pump.

4) Open low-pressure valve and suck old refrigerant from system.

5) When low-pressure gauge reading has reached to approximately 66.7 kPa (500 mmHg, 19.69 inHg), slowly open high-pressure valve.

6) When pressure inside system has dropped to 94.6 kPa (710 mmHg, 27.95 inHg), fully close both valves of manifold gauge and stop vacuum pump. Let it stand for 5 to 10 minutes in this state and confirm that the reading does not rise.

a. The low-pressure gauge reads lower by 3.3 kPa (25 mmHg, 0.98 inHg) per a 300 m (1,000 ft) elevation. Perform evacuation according to the following table.

Elevation m (ft)	Vacuum of system kPa (mm Hg, in Hg)
0 (0)	94.6 (710, 27.95)
300 (1,000)	91.3 (685, 26.97)
600 (2,000)	88.0 (660, 25.98)
900 (3,000)	84.6 (635, 25.00)
NOTE: **Values show readings of the low-pressure gauge.**	

b. The rate of ascension of the low-pressure gauge should be less than 3.3 kPa (25 mmHg, 0.98 inHg) in five minutes.

If the pressure rises or the specified negative pressure can not be obtained, there is a leak in the system. In this case, immediately charge system with refrigerant and repair the leak described in the followings.

(1) Confirm that both valves of manifold gauge are fully closed and then disconnect center charging hose from vacuum pump.

(2) Connect center hose to can tap in place of vacuum pump. Attach refrigerant can to can tap and pass refrigerant to manifold gauge.

(3) Loosen the connection of center fitting of manifold gauge to purge air from center hose.

(4) Open low-pressure valve of manifold gauge and charge refrigerant into system. After one can [about 0.4 kg (0.9 lb)] of refrigerant has been charged into system, close low-pressure valve.

(5) Check for refrigerant leakage with a leak detector. Repair any leakages found. Refer to "Checking for Leaks" and "Refrigerant Leaks".

(6) Confirm that both valves of manifold gauge are fully closed and then change center charging hose from can tap to vacuum pump.

(7) Open high- and low-pressure valves and operate vacuum pump to such refrigerant from system. When the pressure in system has dropped to 94.6 kPa (710 mmHg, 27.95 inHg), fully close both valves of manifold gauge.

7) The above operation completes evacuation of system. Next, charge refrigerant. Refer to "Charging Refrigerant".

Evacuating system - First step

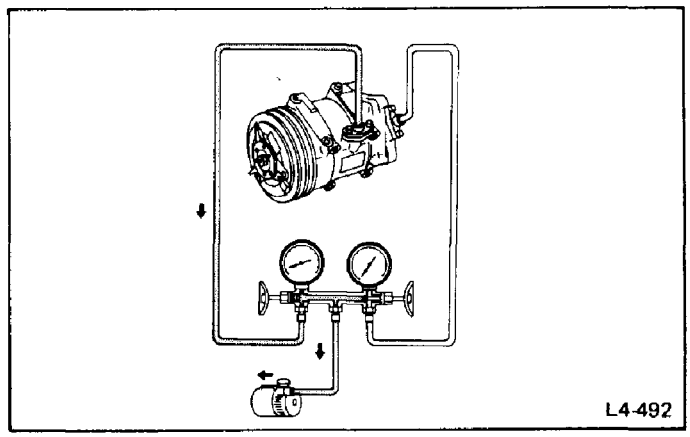

Fig. 13

Evacuating system - Second step

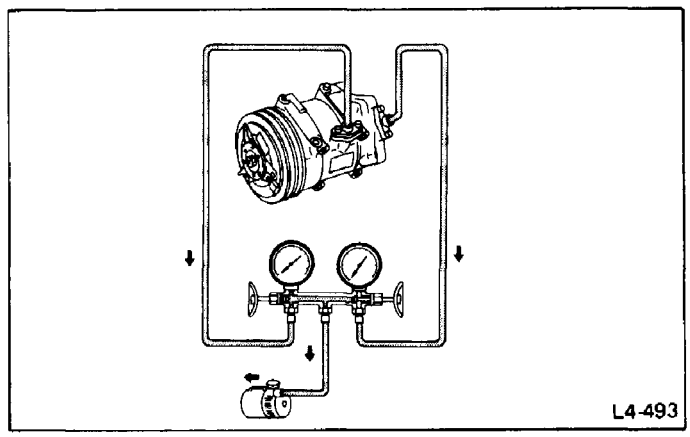

Fig. 14

Charging refrigerant

1) Install manifold gauge to system. Refer to "Handling Manifold Gauge".

a. Be sure to purge air from the high- and low-pressure charging hoses.

b. If air is mixed with refrigerant gas in system, evacuation of system should be performed. Refer to "Evacuating System".

2) Attach center charging hose of manifold gauge to refrigerant can through can tap. Break seal of refrigerant can to allow refrigerant to enter manifold gauge. Loosen charging hose at the center fitting of manifold gauge and purge air from inside charging hose. Refer to "Handling Can Tap".
3) Open high- and low-pressure valves of manifold gauge and charge refrigerant into system.

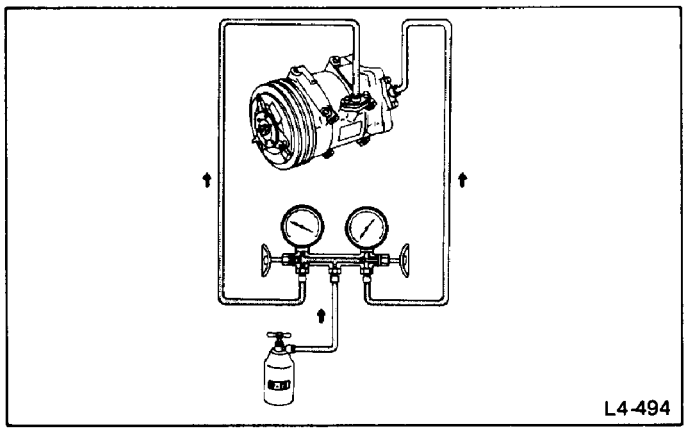

Fig. 15

a. When refrigerant charging speed is slow, immerse refrigerant can in water heated to a temperature of about 40°C (104°F). However, note that this is dangerous when water is hot.

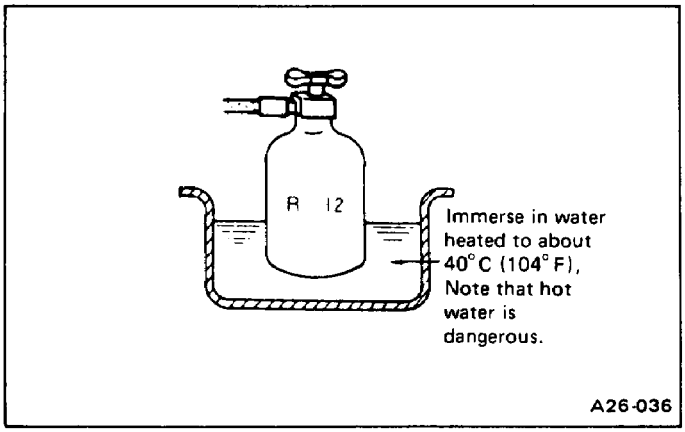

Fig. 16

CAUTION:
a. Under any circumstances the refrigerant can must not be warmed in water heated to a temperature of over 52°C (126°F).
b. A blow torch or stove must never be used to warm up the can.
c. When charging liquefied refrigerant into the system with the can turned upside down to reduce charging time, charge it only through high pressure valve, but not through low-pressure valve.
After completion of charging, the compressor should always be turned several times manually.

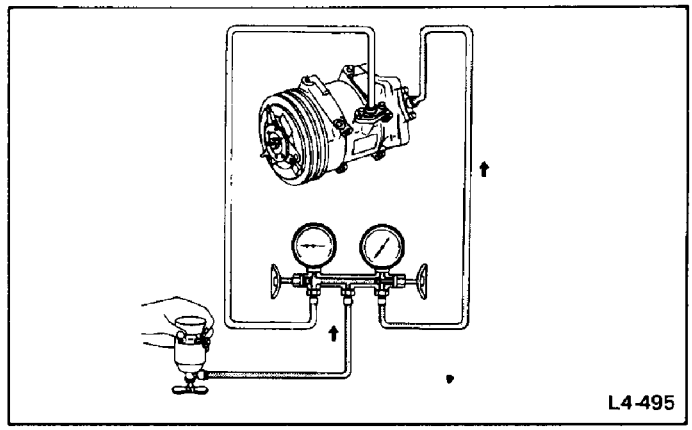

Fig. 17

4) If refrigerant charging speed slows down, charge it while running the compressor for ease of charging. After having taken the steps up to 3) above, proceed with charging in the following order.
(1) Shut off high pressure valve of manifold gauge.

CAUTION:
Never charge refrigerant through high pressure side of system since this will force refrigerant back into refrigerant can and can may explode.

(2) Run the engine at idling speed.
(3) Set temperature control lever and fan switch at maximum cool and maximum speed respectively.
(4) Charge refrigerant while controlling low-pressure gauge reading at 275 kPa (2.8 kg/cm^2, 40 psi) or less by turning in or out low-pressure valve of manifold gauge.

Repeat from 3) when difference of pressure between low and high pressure gauges does not appear after one minute operation. It is not possible to charge refrigerant without pressure difference between low- and high-pressure gauges.

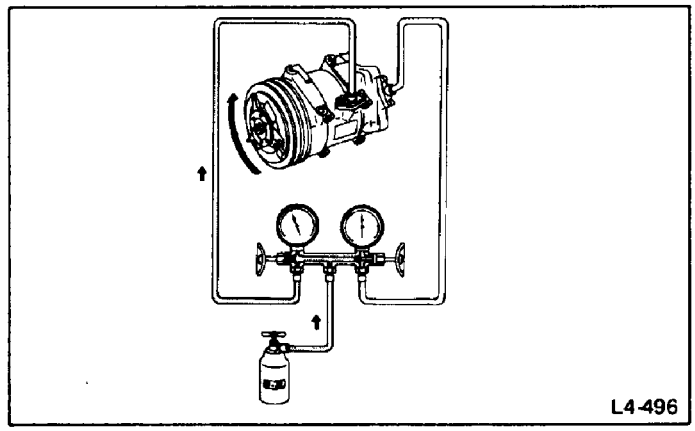

Fig. 18

5) When refrigerant can is empty, fully close both valves of manifold gauge and replace refrigerant can with a new one.
Before opening manifold gauge valve to charge refrigerant from new can, be sure to purge air from inside charging hose.
6) Charge the specified amount of refrigerant into system by weighing charged refrigerant with scale. Overcharging will cause discharge pressure to rise.

Measure the amount of charged refrigerant with a scale. Make a note of the amount charged from can.

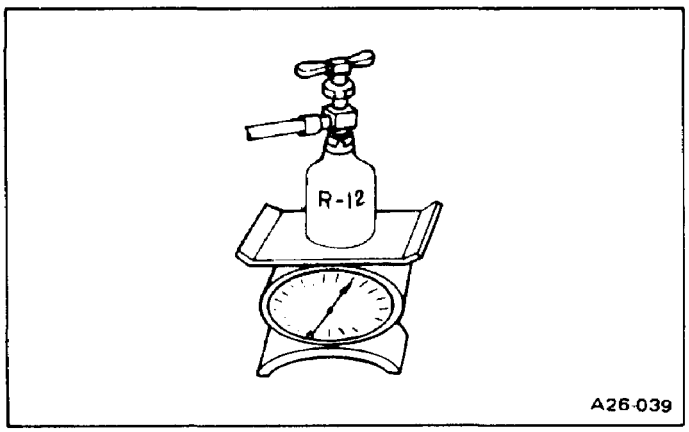

Fig. 19

Refrigerant capacity

Unit: kg (lb)

Refrigerant	Minimum	Maximum
R-12	0.74 (1.63)	0.79 (1.74)

The presence of bubbles in sight glass of receiver drier is an unsuitable method of checking the amount of refrigerant charged in system. The state of the bubbles in sight glass should only be used for checking whether the amount of charged refrigerant is small or not. The amount of charged refrigerant can be correctly judged by means of discharge pressure. Refer to "Refrigerant Level Check".

7) After the specified amount of refrigerant has been charged into system, close manifold gauge valves. Then detach charging hoses from service valves of system. Be sure to install valve cap to service valve.
8) Confirm that there are no leaks in system by checking with a leak detector.
Refer to "Checking for Leaks".

Conducting a performance test prior to removing manifold gauge is a good service operation. Refer to "Performance Test".

Oil separator

The Oil Separator Kit is used to efficiently withdraw the oil in the refrigeration system (that is, to separate oil and refrigerant). If an excessive quantity of oil is charged in the system, or if the quantity of oil in the system is unknown, adjust the quantity of oil in the system to specification, proceeding as follows:
1) Discharge air conditioning system. (Refer to "Discharging System".)
2) Using two special flexible hoses and double union in Oil Separator Kit connect oil separator between compressor discharge side and condenser, as shown.
3) Evacuate and charge system. (Refer to "Evacuating and Charging System.")
4) Fully open all windows or all doors of car.
5) Operate compressor at engine idling with air conditioner set for maximum cooling and high fan speed.

Never allow engine speed to exceed idling speed.

6) Observe oil separator oil level gauge. If rise of oil level has stopped, immediately stop compressor operation. (This indicates that oil has been withdrawn.)

a. Do not continue oil withdrawal operation more than 10 minutes.
b. In some cases, fluid refrigerant may be mixed with oil, causing unusual rise of oil level. In such a case, stop compressor operation after ten minutes of withdrawal operation.

7) Discharge system. (Refer to "Discharging System.")
8) Disconnect oil separator, two flexible hoses and double union from system.
9) Connect refrigerant lines to original positions.
10) Disconnect low flexible hose from compressor suction valve.
11) Add 120 ml (4.1 US fl oz, 4.2 Imp fl oz) of new compressor oil from compressor suction valve.
After charging, rotate compressor clutch with hand 5 to 10 turns.
12) Connect low flexible hose to compressor suction valve. Evacuate and charge system. (Refer to "Evacuating System and Charging Refrigerant".)
13) Conduct leak test and performance test.
14) Gradually loosen drain cap of oil separator to release residual pressure. Remove cap and drain oil.
15) To prevent formation of rust and intrusion of moisture or dust, perform the following before placing oil separator kit into storage.
(1) Cap each opening of two flexible hoses and double union securely.
(2) Cap oil separator, evacuate it from service valve, and charge refrigerant.

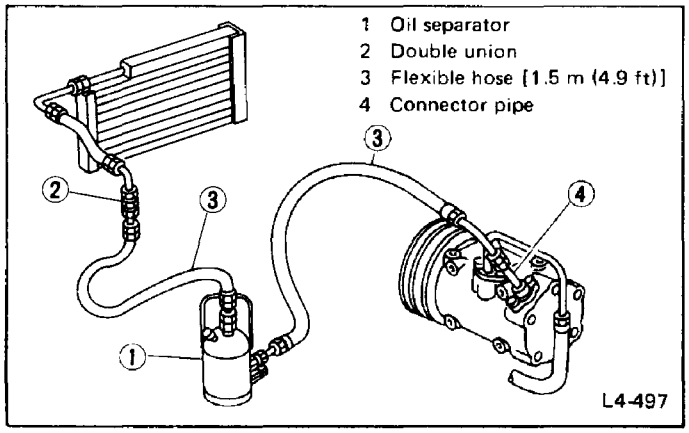

Fig. 20

CHECKING FOR LEAKS

Conduct a leak test whenever leakage of refrigerant is suspected and when conducting service operations which are accompanied by disassembly or loosening of connection fittings.

Refrigerant is a colorless, odorless gas and leakage from system is difficult to detect. Accordingly, the use of a leak detector facilitates check for leaks. Two methods of checking are available; one employs a halide leak detector which burns propane gas or butane gas and the other is an electric type leak detector.

Halide leak detector

Since the propane leak detector and butane leak detector are the same in respect to their operation, this section describes the operation of the propane leak detector.

The copper screen is heated by the burning of propane. Refrigerant gas decomposes to color the flame when it contacts the heated screen. The gas to be checked is drawn into the sampling tube and sent out to the burner. A refrigerant leak can clearly be detected by variations in the color of the flame.

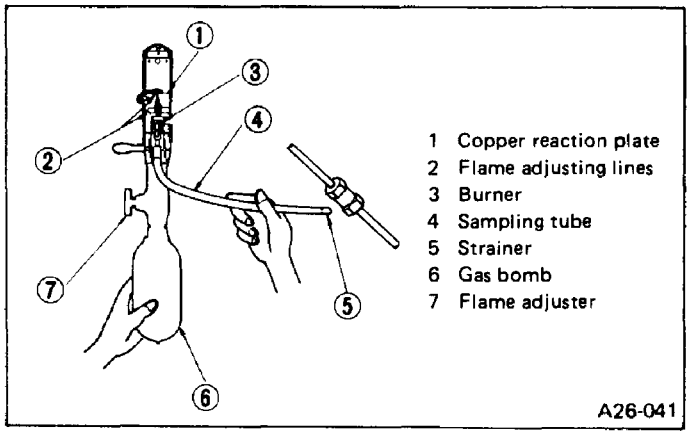

Fig. 21

	Propane type	Butane type
NO LEAK	Greenish blue	Pale blue
SMALL LEAK	Yellow	Bright blue
LARGE LEAK	Purple	Vivid green

1) Discharge refrigerant in one or two seconds to ascertain that system has sufficient pressure needed for leak detection. Charge with 0.4 kg (0.9 lb) of refrigerant, if necessary.

2) Light leak detector. Adjust the height of the flame between flame adjusting lines at the top and bottom of combustion tube. A reaction plate will immediately become red hot.

3) Place the end of sampling tube near the point of the suspected leak in system.

a. Since refrigerant gas is heavier than air, small leaks can be easily detected by placing sampling tube directly below the check point.

b. Suitable ventilation is required. If refrigerant gas is mixed with the surrounding air, leak detector will always indicate a response and detection of the actual leak will be difficult.

c. Never hold leak detector at an angle.

CAUTION:

a. Never inhale the fumes produced by combustion of refrigerant gas since they are toxic.

b. Never use halide torch in a place where combustible or explosive gas is present.

4) The flame will be almost colorless when there is no refrigerant gas being burned. When there is a small refrigerant gas leak, the flame will be green or yellowgreen. When refrigerant gas leakage is large, the flame will be brilliant blue or purple. Since the color of the flame will be yellow when dust is being burned or there is aging scale on copper reaction plate, always keep the strainer of sampling tube and reaction plate clean.

5) Major check points

(1) Compressor

- Compressor shaft seal (rotate the compressor by hand)
- Oil filler plug
- Flexible hose connections
- Rear cover and side cover gaskets
- Service valve

(2) Condenser

- Condenser pipe fitting
- Condenser inlet and outlet pipe connections

(3) Piping

- O-ring section of high pressure and low pressure flexible hose.

- Pipe connections
- Service valve

(4) Evaporator housing

- Inlet and outlet pipe connections
- Expansion valve

Electric leak detector

For the operational procedures, refer to the instructions furnished with each electric leak detector.

REFRIGERANT LEVEL CHECK

Sight glass

Sight glass is provided at the top of receiver drier. One guide for whether there is enough refrigerant in system is given by observing refrigerant flow through sight glass. However, this method is unsuitable for judging the amount of refrigerant. The correct refrigerant level can be judged by measuring the system pressures in accordance with the procedures as described "Performance Test".

1) Start the engine and hold engine speed at 1,500 rpm.
2) Turn on A/C switch.
3) Set blower to maximum speed.
4) Check sight glass after the lapse of about five minutes. Judge according to the following table.

<table>
<tr><th>Amount of refrigerant / Check item</th><th>Almost no refrigerant</th><th>Insufficient</th><th>Suitable</th><th>Too much refrigerant</th></tr>
<tr><td>Temperature of high pressure and low pressure pipes.</td><td>Almost no difference between high pressure and low pressure side temperature.</td><td>High pressure side is warm and low pressure side is fairly cold.</td><td>High pressure side is hot and low pressure side is cold.</td><td>High pressure side is abnormally hot.</td></tr>
<tr><td>State in sight glass.</td><td>Bubbles flow continuously. Bubbles will disappear and something like mist will flow when refrigerant is nearly gone.
 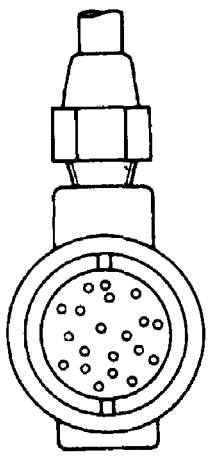
A26-042
Fig. 22</td><td>The bubbles are seen at intervals of 1 - 2 seconds.
 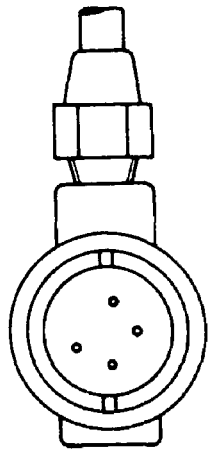
A26-043
Fig. 23</td><td colspan="2">Almost transparent. Bubbles may appear when engine speed is raised and lowered. No bubbles can be seen.
No clear difference exists between these two conditions.
 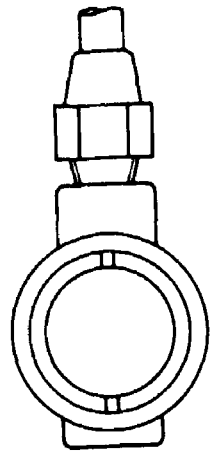
A26-044
Fig. 24</td></tr>
<tr><td>Pressure of system.</td><td>High pressure side is abnormally low.</td><td>Both pressure on high and low pressure sides are slightly low.</td><td>Both pressures on high and low pressure sides are normal.</td><td>Both pressures on high and low pressure sides are abnormally high.</td></tr>
<tr><td>Repair.</td><td>Stop compressor and conduct an overall check.</td><td>Check for gas leakage, repair as required, replenish and charge system.</td><td></td><td>Discharge refrigerant from service valve of low pressure side.</td></tr>
</table>

a. The bubbles seen through the sight glass are influenced by the ambient temperature. Since the bubbles are hard to show up in comparatively low temperatures below 20°C (68°F), it is possible that a slightly larger amount of refrigerant would be filled, if supplied according to the sight glass. Be sure to recheck the amount when it exceeds 20°C (68°F). In higher temperature the bubbles are easy to show up.
b. When the screen in the receiver drier is clogged, the bubbles will appear even if the amount of refrigerant is normal. In this case, the outlet side pipe of the receiver drier becomes considerably cold.

Performance test

Check for the amount of refrigerant in the system can be made by measuring pressure on discharge side.
The correct amount of refrigerant is in the system, if pressure on the discharge side is within the specified range. For details, refer to "Performance Test" described later.
Overcharging will show up in higher pressure on discharge side.

COMPRESSOR OIL LEVEL CHECK

The oil used to lubricate compressor circulates into system with refrigerant gas while compressor is operating. If a considerable amount of leakage of refrigerant gas happens, the leakage of compressor oil is also considered. There will be no compressor oil leakage from a completely sealed system. When system operates under satisfying condition, the compressor oil level check is unnecessary.
When checking the level of compressor oil or when replacing any component part of the system, use the following service procedure. This facilitates to return oil to compressor.

1) Operate compressor at engine speed from 1,000 rpm to 1,500 rpm with controls set for maximum cooling and high blower speed for about 10 minutes in order to return compressor oil to compressor.
2) Stop the engine and discharge refrigerant of system and then remove compressor from the car.
3) When exchanging the compressor for new one which contains 150 cm^3 (150 cc, 9.15 cu in) oil, drain 80 cm^3 (80 cc, 4.88 cu in) oil from it respectively or adjust the amount of oil to the same of the removed compressor.
4) If the oil separator is not available, control the quantity of oil in accordance with the following table, when charging compressor oil into the system from suction port of compressor by using funnel as below picture.

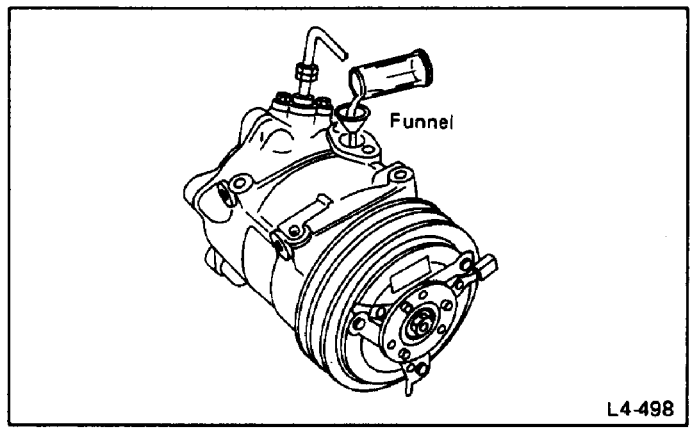

Fig. 25

OIL CHARGE TABLE

Condition		Proper charging method	Amount of oil to be added mℓ (US fl oz, Imp fl oz)
Replacement of compressor		Remove all oil from new compressor* and charge it with amount of oil shown in right column.	70 (2.4, 2.5)
Replacement of evaporator		Add amount of oil shown in right column.	70 (2.4, 2.5)
Replacement of receiver drier (liquid tank)		Oil need not be added.	–
Replacement of condenser	There is no sign of oil leakage from condenser.	Oil need not be added.	–
	There is evidence of a large amount of oil leakage from condenser.	Add amount of oil shown in right column.	50 (1.7, 1.8)
Replacement of flexible hose or copper tube	There is no sign of oil leakage.	Oil need not be added.	–
	There is evidence of a large amount of oil leakage.	Add amount of oil shown in right column.	50 (1.7, 1.8)
Gas leakage	There is no sign of oil leakage.	Oil need not be added.	–
	There is evidence of a large amount of oil leakage.	Add amount of oil shown in right column.	50 (1.7, 1.8)

* Remove compressor oil as follows:

1. With the compressor upside down, completely drain the oil through the suction port (cast-out letter "S" mark side). Be sure to use a clean container to receive the oil.
2. When the oil stops flowing out, rotate the clutch hub (compressor shaft) two or three times to completely drain the oil.

When replacing two or more of the parts indicated in the above chart, follow each instruction under the proper charging method column for the proper amount of oil to be added.

– Example –

When replacing the evaporator and compressor, drain all oil out of the new compressor and then charge the compressor with the total amount of 140 mℓ (4.7 US fl oz, 4.9 Imp fl oz) oil [70 mℓ (2.4 US fl oz, 2.5 Imp fl oz) for the evaporator and 70 mℓ (2.4 US fl oz, 2.5 Imp fl oz) for compressor].

CAUTION:

a. The oil should not be transfused from a container into another, as the failure will possibly cause moisture to mix with the oil.

b. The used oil should not be returned into a container.

c. The oil should not be used if its state of preservation is not clear enough.

If compressor is inoperative due to defective compressor or heavy loss of refrigerant, exchange the compressor through the procedure from 2 to 5.

PERFORMANCE TEST

The cooling performance of the air conditioner changes considerably with changes in surrounding conditions. Testing must be performed using the correct method. This test is used to judge whether system is operating correctly and can also be used as a guide in checking for problems.

1) Park the car indoors or in the shade.
2) Open all the windows of the car fully. However, close the doors.
3) Open the hood.
4) Connect manifold gauge to high- and low-side service valves of the system. Refer to "Handling Manifold Gauge".
5) Set mode switch to A/C MAX position.
6) Set temperature control lever to COLD position.
7) Start the engine and hold engine speed at 1,500 rpm.
8) After the air conditioner has been operated for about 10 minutes, measure system pressures at high-pressure (discharge) side and low-pressure (suction) side.
9) Measure the temperatures of inlet air to blower and outlet air at the grilles.
10) Measure the temperature and humidity of the ambient air at a point 1 m (3.3 ft) front of condenser. However, a dry bulb and wet bulb must not be placed in direct sunlight.
11) Check for any abnormalities by comparing the test results with standard pressure in "Performance Chart".

a. The pressure will change in the following manner with changes in conditions:
- **When blower speed is low, discharge pressure will drop.**
- **When the relative humidity of intake air is low, discharge pressure will drop.**

b. The temperature will change in the following manner with changes in conditions:
When the ambient air temperature is low, the outlet air temperature will become low.

If the test reveals that there is any abnormality in system pressure, isolate the cause and repair by reference to "Troubleshooting".

REFRIGERANT LEAKS

If leaks are noticeable, leaky parts should be repaired. Then system should be filled with refrigerant. Do not operate compressor with refrigerant level excessively low.
If this caution is neglected, a burnt compressor will result since heavy loss of refrigerant usually indicates heavy loss of compressor oil.
If system has been exposed to atmosphere for an extended period of time, receiver drier must be replaced. If leaks are slight and no air is present in system, add refrigerant as necessary. To detect leaks, refer to relative topics under "Checking for Leaks". Here is how leaks are stopped.

1) Check torque on the connection fitting and, if too loose, tighten to the proper torque. Check for gas leakage with a leak detector.
2) If leakage continues even after the fitting has been retightened, discharge refrigerant from system, disconnect the fittings, and check its seating face for damage. Always replace even if damage is slight.
3) Check compressor oil and add oil if required.
4) Charge refrigerant and recheck for gas leaks. If leaks are found, evacuate and charge system.

PERFORMANCE CHART

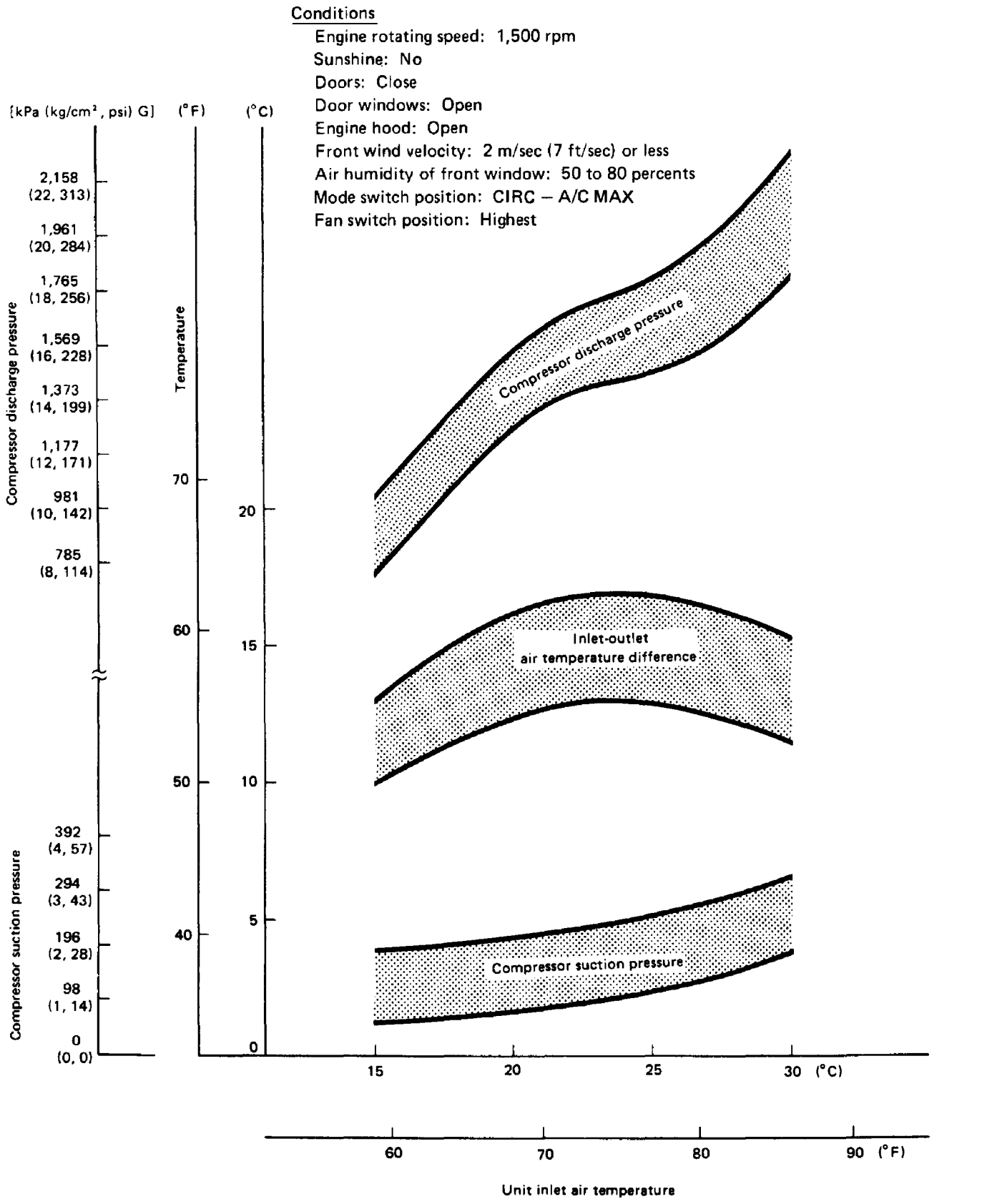

Fig. 26

A26-079

Compressor

The MJS-170 compressor employs an oil-mist jet system in which some lubricant is mixed in the refrigerant and the mixture is sprayed directly to the sliding portions from the compressor suction side.

COMPRESSOR CLUTCH

The most likely source of problem is clutch slippage. Factors are listed here. Exercise ample care.

1) Clearance between clutch hub and pulley should be within specifications at all peripheral points.

Clearance: mm (in)
0.5 – 0.8 (0.020 – 0.031)

2) Make sure that there is no oil or dirt on friction surfaces of clutch disc (clutch hub) and pulley. Remove any oil or dirt with a dry rag.

3) Make sure that terminal voltage at magnetic coil is above 10.5 V.

REMOVAL

1) Battery negative terminal
2) Pulser (pulser and compressor connector)
3) Discharge refrigerant using manifold gauge
   (1) Fully close low-pressure valve of manifold gauge.
   (2) Connect low-pressure charging hose of manifold gauge to low-pressure service valve.
   (3) Slightly open low-pressure manifold gauge valve and slowly discharge refrigerant from system.

Do not allow refrigerant to rush out. Otherwise, compressor oil will be discharged along with refrigerant.

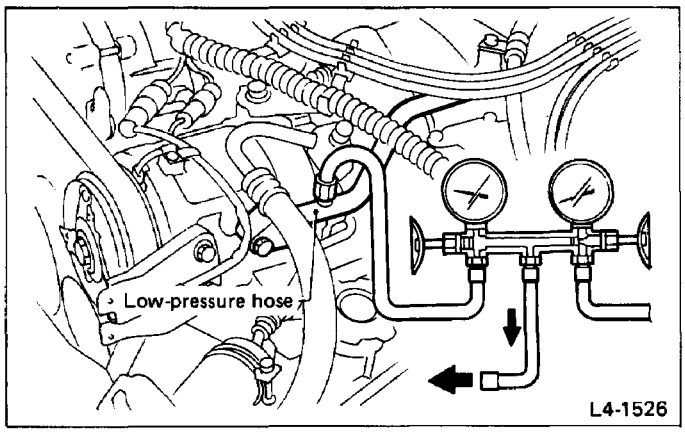

Fig. 27

4) High-pressure hose (Flexible hose Pd)

Plug the opening to prevent foreign matter from getting in.

5) Low-pressure hose (Flexible hose Ps)

Plug the opening to prevent foreign matter from getting in.

6) V-belt (Refer to Chapter 2-2 "Oil Pump Assembly.")
7) Remove compressor and compressor upper bracket.

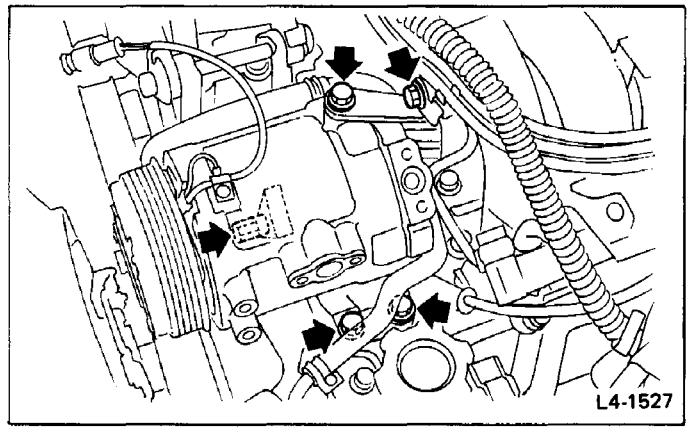

Fig. 28

INSTALLATION

1) Compressor

Tighten compressor mounting bolts in numerical sequence, as shown in figure below, to specified torque.

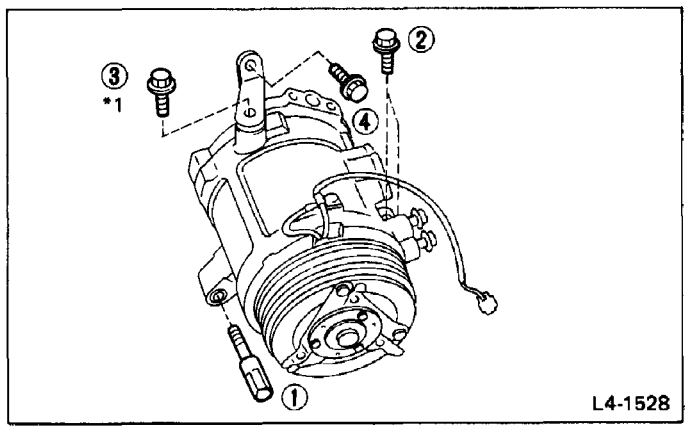

Fig. 29

***1:**
Tighten this bolt with your fingers until it stops go. Tighten all other bolts and then this bolt to specified torque.
When tightening this bolt, be careful because it has a coarse-thread pitch.

Tightening torque:
Compressor mounting bolt:
34 – 44 N·m (3.5 – 4.5 kg-m, 25 – 33 ft-lb)

2) V-belt
(1) Loosen belt tension pulley lock nut.
(2) Turn adjusting bolt to adjust belt tension. The belt tightens when the bolt is turned clockwise and vice versa.

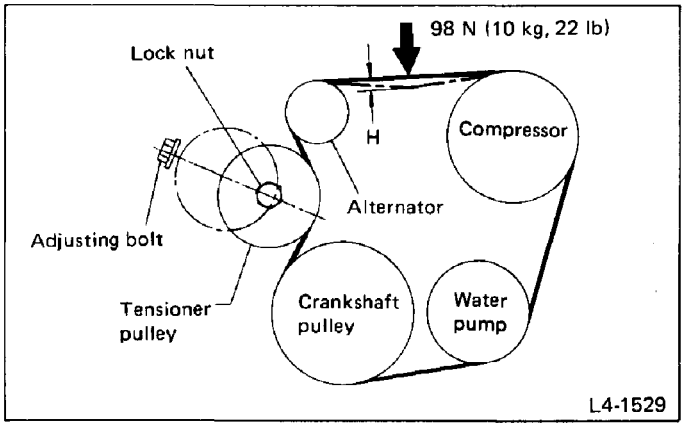

Fig. 30

	H: mm (in)/98 N (10 kg, 22 lb)	Tension: N (kg, lb)
New belt	5.5 – 6.5 (0.217 – 0.256)	637 – 736 (65 – 75, 143 – 165)
Existing belt	6.5 – 7.5 (0.256 – 0.295)	441 – 637 (45 – 65, 99 – 143)

(3) Tighten lock nut.

Tightening torque:
34 – 44 N·m (3.5 – 4.5 kg-m, 25 – 33 ft-lb)

(4) After adjusting belt tension, turn adjusting bolt counterclockwise to lock.

Tightening torque:
4 – 6 N·m (0.4 – 0.6 kg-m, 2.9 – 4.3 ft-lb)

a. When replacing belt with a new one, adjust its tension to the specification, then readjust it to the same specification after running engine for 5 minutes in consideration of its initial expansion.
b. Ensure that the V-belt is aligned correctly. If it is not, check for loose bolts.

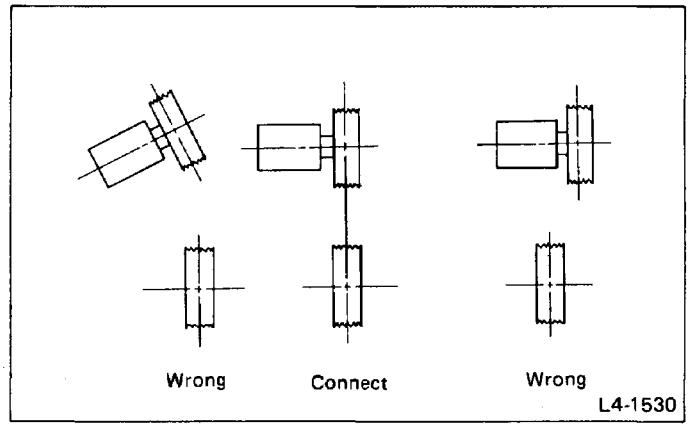

Fig. 31 Confirming pulley alignment

a. The V-belt should not be too tight or too loose.
A belt which is too tight may break bearing or cause gas to leak from the shaft seal. A belt which is too loose slips, thereby causing the belt cut.
b. After completing the compressor installation and testing the system operation, check and adjust the tension of both V-belts again.

3) Low-pressure hose (Flexible hose Ps)
Connect low-pressure hose with compressor.
4) High-pressure hose (Flexible hose Pd)
Connect high-pressure hose with compressor.

Tightening torque:
Low- and High-pressure hoses:
15 – 25 N·m (1.5 – 2.5 kg-m, 11 – 18 ft-lb)

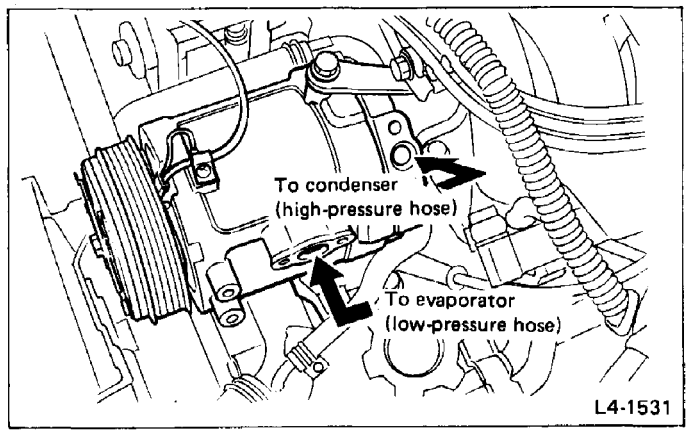

Fig. 32

Be sure to apply compressor oil to the periphery of O-ring.

5) Pulser
(1) Install pulser onto the compressor.

Tightening torque:
15 – 25 N·m (1.5 – 2.5 kg-m, 11 – 18 ft-lb)

Be sure to provide a specified clearance between the pulser's sending portion and compressor clutch.

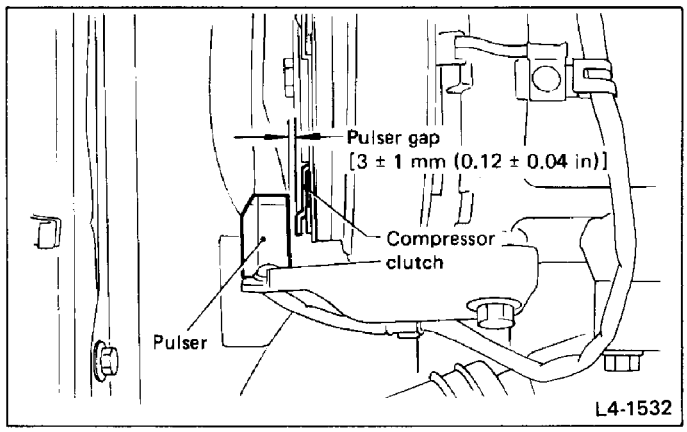

Fig. 33

(2) Connect pulser and compressor connector.

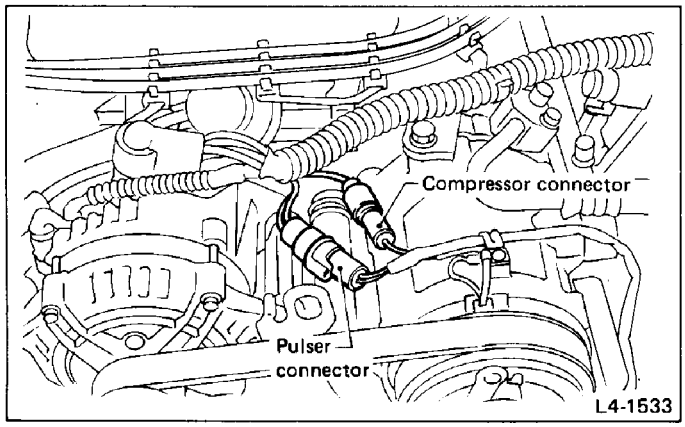

Fig. 34

6) Battery negative terminal
7) Charging refrigerant (Refer to 4-7 "On-Car Service.")

DISASSEMBLY

1) Discharging refrigerant
(1) When removing the compressor from the vehicle using manifold gauge, gradually discharge the refrigerant from the low pressure side.

Do not suddenly discharge the refrigerant, otherwise oil will also be discharged with the refrigerant.

(2) When using the compressor which has been stored, remove the seal cover from the inlet and outlet ports of the high pressure and low pressure sides.

a. Insert the INJECTOR NEEDLE (926190000) into the hole in the seal cover, and gradually discharge the high pressure gas.
b. After discharging, remove the seal cover.

2) Discharging oil
Hold the compressor upside down, and discharge the oil from the refrigerant inlet port [approx. 20 to 50 mℓ (0.7 to 1.7 US fl oz, 0.7 to 1.8 Imp fl oz)].

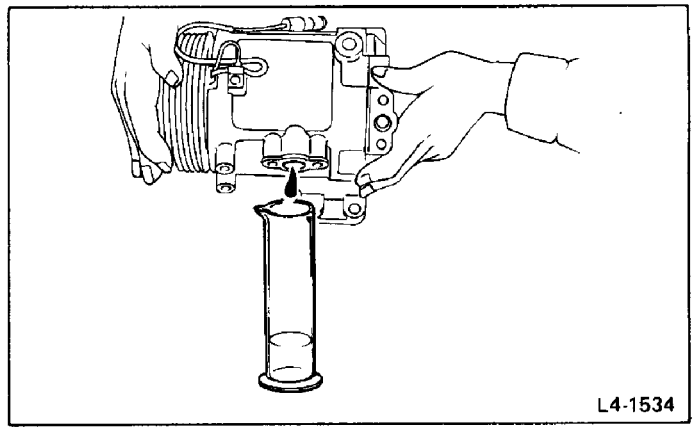

Fig. 35

If the compressor has been removed from the vehicle, measure the amount of oil discharged.

3) Removing clutch ASSY
(1) Remove the 8 mm nut and hub nut using CLUTCH TIGHTENER (925770000) and 13 mm socket.

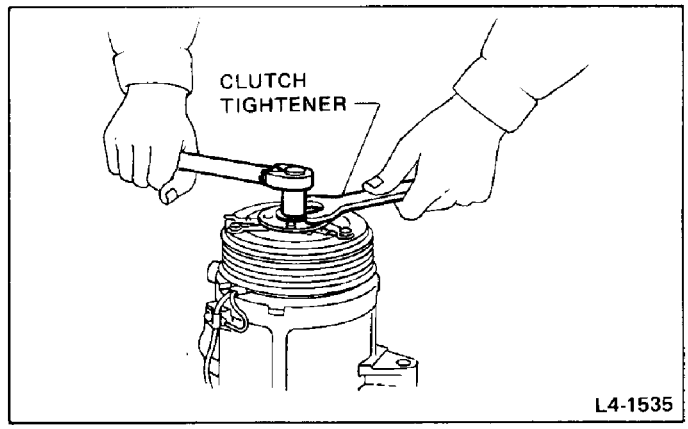

Fig. 36

Fix the CLUTCH TIGHTENER securely when turning the socket wrench.

(2) Remove the clutch armature using CLUTCH ARMATURE REMOVER (926130000).

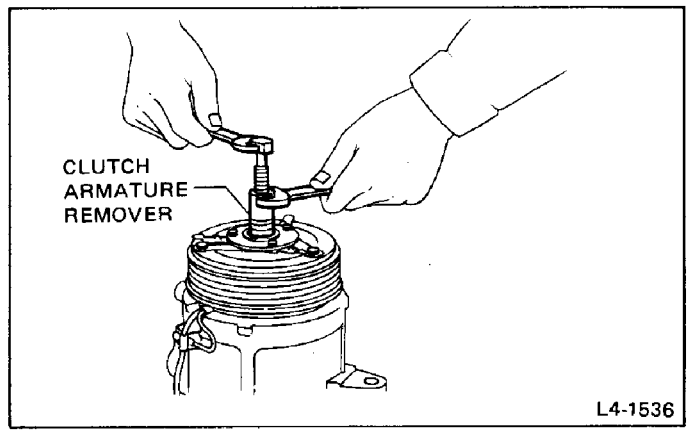

Fig. 37

(3) Remove the spacer ASSY.

Retain the parts for reassembly.

(4) Remove the 40 mm wedge ring using snap ring pliers.

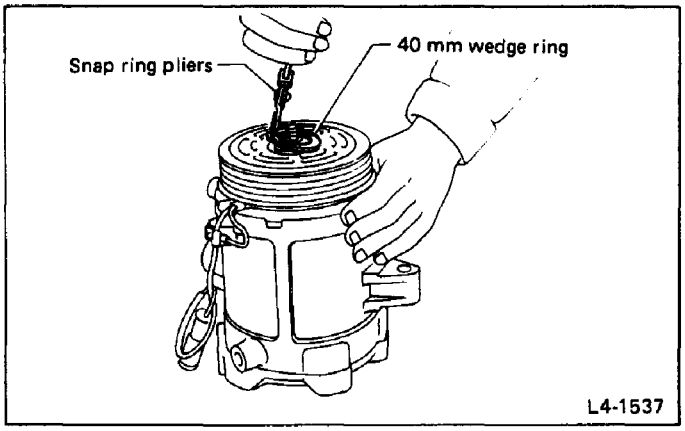

Fig. 38

Do not reuse the removed part.

(5) Remove the rotor.

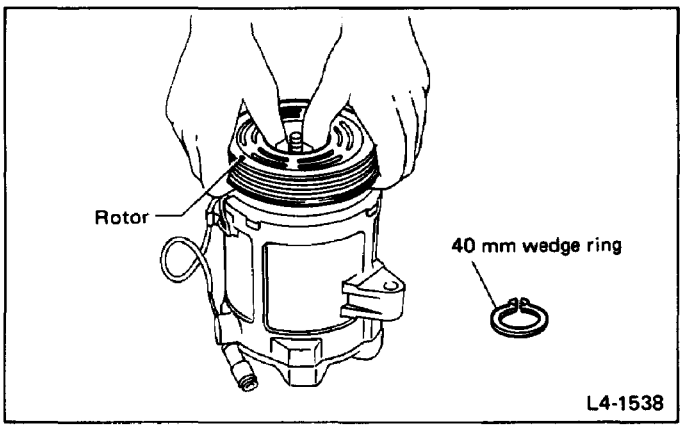

Fig. 39

(6) Remove the 5 mm screw fixing the lead wire clamp using standard screwdriver.

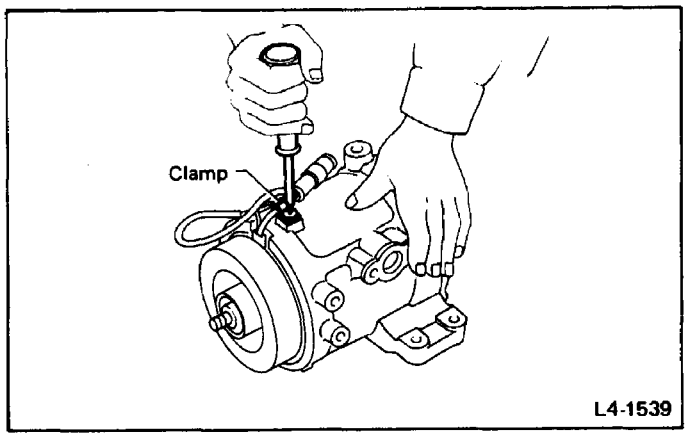

Fig. 40

(7) Remove the 50 mm wedge ring using snap ring pliers.

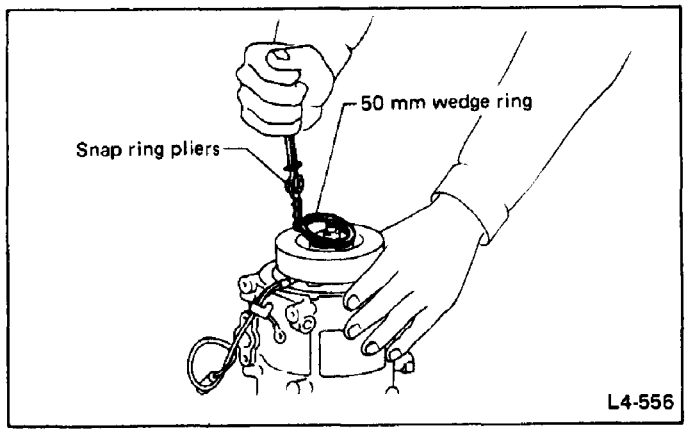

Fig. 41

Do not reuse the removed part.

(8) Remove the stator.

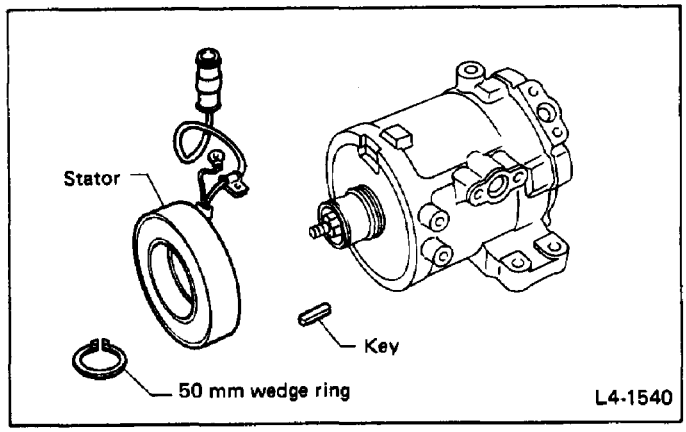

Fig. 42

Check the terminal for damage.
Do not damage the terminal when storing.

(9) Remove the key.

Do not reuse the removed part.

4) Removing shaft seal
(1) Remove the 32 mm snap ring using snap ring pliers.

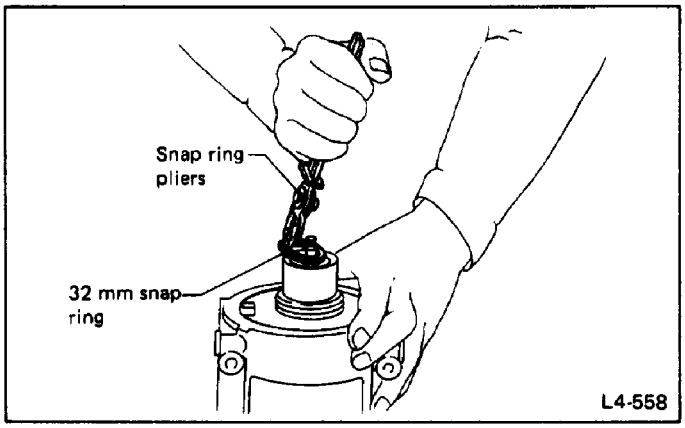

Fig. 43

Do not damage the cover end (F).

(2) Remove cover plate using refrigerant, charging hose, charging valve and INJECTOR NEEDLE (926190000).

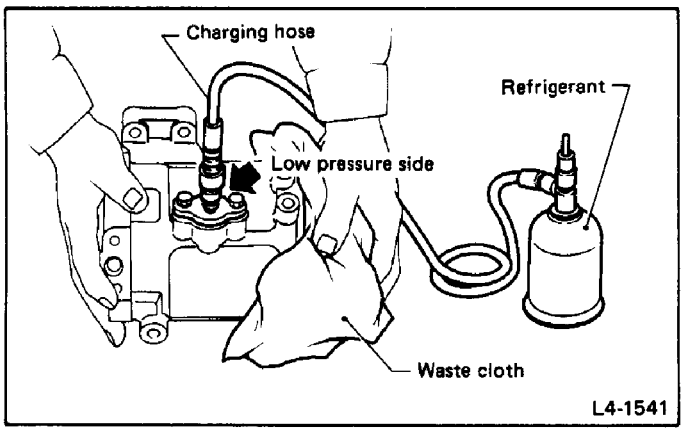

Fig. 44

a. Attach the seal cover to the inlet and outlet ports, and apply pressure to the low pressure side.
b. Using waste cloth on the shaft portion receive the cover plate pushed out.
c. Do not use air pressure for pressurizing. Water in the air will cause rust to be formed inside the compressor.
d. Be sure to cover the shaft portion with cloth since the cover plate will be ejected suddenly.
e. If it does not eject, push it back, and then press it again.
f. Do not reuse the removed part.

(3) Remove the seal ring using SHAFT SEAL INSTALLER (926120000).

a. Using the SHAFT SEAL INSTALLER, push the ring while rotating it slowly in either direction, then carefully withdraw it.
b. Do not reuse the removed parts.

5) Removing cover end (R)
(1) Attach FRONT COVER TIGHTENER (926170000).

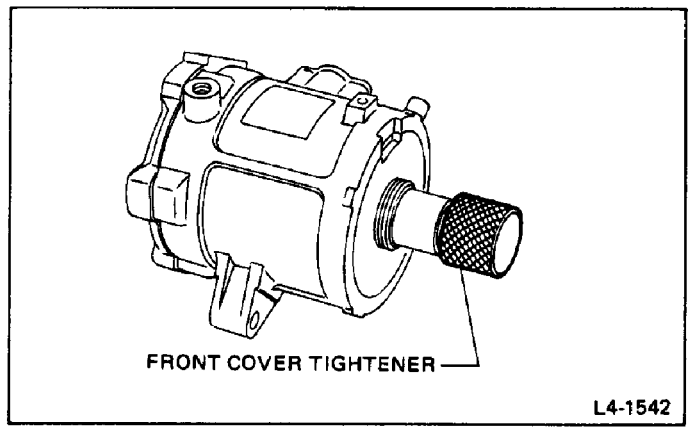

Fig. 45

Remove dirt and other foreign matter from the tapered surface at the end of the cover end (F).

(2) Remove the 10 mm socket bolt using 8 mm hexagon wrench or 8 mm HEXAGON SOCKET WRENCH (926180000).

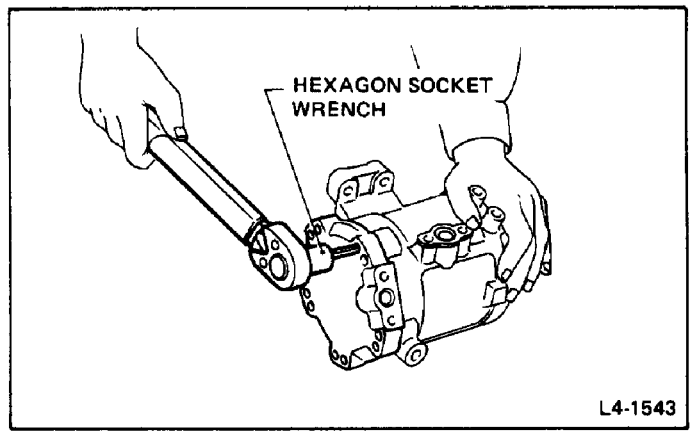

Fig. 46

a. Loosen each bolt one turn in diagonal selection, then loosen bolts off.
b. Check the thread and neck portion of each bolt for deformation.

(3) Remove the cover end (R) using plastic hammer.

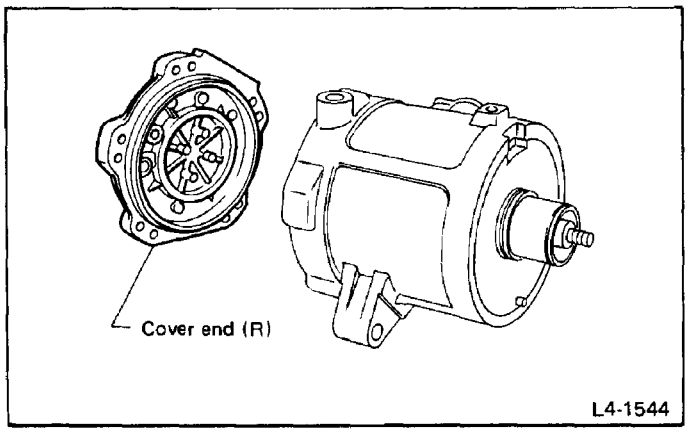

Fig. 47

Slowly withdraw by holding with a hand. If hard to remove, tap the flange portion lightly by diagonal selection with a plastic hammer.

(4) Remove the O-rings.
115 mm, 110 mm, 63 mm

Do not reuse the removed O-rings.

(5) Remove the cylinder head (R) and SV plate.

a. Do not damage the seat surface.
b. Do not deform the SV plate when removing.

6) Removing cover end (F)
(1) Remove the shell using plastic hammer.

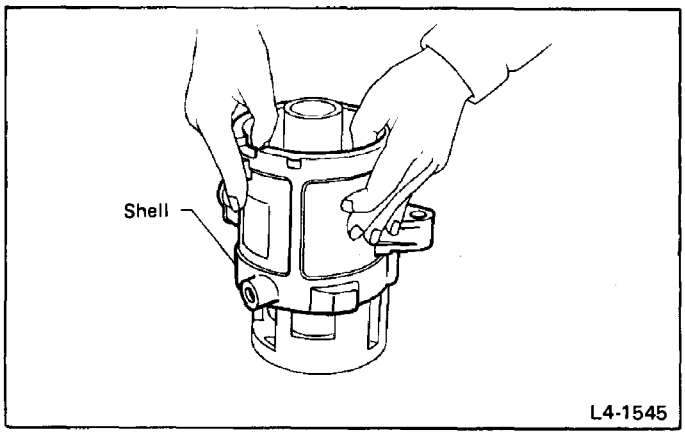

Fig. 48

a. Place the shell with its clutch side facing up, and pull it off upward while tapping the flange portion with a plastic hammer.
b. Use a stand (90 mm cylinder) to facilitate removal of shell.

(2) Remove the shell packing.

a. Clean the packing surface of the shell using a knife or the like.
b. Replace the shell packing with a new one.

(3) Remove the cover end (F).

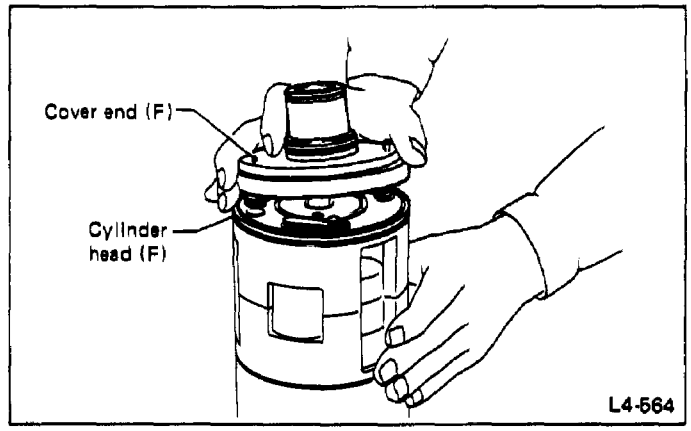

Fig. 49

(4) Remove the O-rings.
115 mm, 110 mm, 63 mm

Replace the O-rings with new ones.

(5) Remove the cylinder head (F) and SV plate.

a. Do not damage the seat surface.
b. Do not deform the SV plate when removing.

INSPECTION

a. After washing the parts, dry them naturally; avoid use of compressed air for drying, because water in the air may be trapped inside the compressor.
b. Check each part visually to see whether it can be used again by referring to "Disassembled Parts Check List".

Parts Check List

Part name	Check point
Armature	(1) Rotor contacting surface for uneven wear or sign of uneven contact. (2) Plate spring for permanent set, deformation, cracks, or breakage. (3) Key groove for deformation. (4) Shaft fitting surface for seizure or fretting. (5) Disk and hub for offset. (6) Stopper rubber for hardening or missing.
Rotor	(1) Armature contacting surface for uneven wear or sign of uneven contact. (2) Pulley for deformation or crack. (3) Bearing for seizure, damage, or leakage of grease. (4) Bearing for slackening or noise in rotation.
Stator	(1) Resin and coil portion for burn or projected coil. (2) Harness for disconnection, or broken coating.
Shell	(1) Inlet port sealing surface for damage. (2) Threaded portion for deformation or damage. (3) Cylinder contacting surface (inside) for dents or deformation.
Shaft seal	(1) Seal ring seating surface for damage or sign of uneven contact. (2) Seal ring for crack, break, or abnormal wear. (3) O-ring for hardening, deformation, or crack. (4) Spring for permanent set. (5) Case for deformation or crack.
Cover plate	(1) Sealing surface for damage, roughness, sign of uneven contact, or abnormal wear. (2) O-ring groove for damage.
Cover end (F)	(1) Shell packing surface for damage, or deformation. (2) Bearing fitting surface for abnormal wear. (3) Cylinder head fitting surface for damage, or deformation. (4) Cracks, deformation, or breakage.
Cylinder head	(1) Valve for floating up. (Any floating up of a valve is unpermissible.) (2) Valve for damage, cracks, deformation, or rust. (3) Plate for rust. (4) Valve seating surface for flaws, deformation, or sign of uneven contact. (5) Discoloration by temperature rise.
SV plate	(1) Damage, crack, deformation, or rust.
Cylinder	(1) Whether the cylinder rotates smoothly when the shaft is manually turned. (2) Cylinder shaft for axial play, or noise in rotation. (3) Cylinder for crack or damage. (4) Swash plate slipper sliding surface for flaws, abnormal wear, or seizure. (5) Shaft for deformation, damage, abnormal wear; key groove for damage; 8 mm bolt for damage; armature fitting surface for excessive fretting.
Cover end (R)	(1) Cylinder head (R) contacting surface for flaws, or deformation. (2) Separator for incorrect positioning, cracks, or deformation. (3) Cracks, deformation, or damage.

ASSEMBLY

When reassembling, wash each part in clean washing fluid (trichlene or gasoline) and left dry, then check for damage or any other faults.

Do not reuse the packings, O-rings keys and snap rings, replace them with new ones when reassembling.

1) Assembling cover end (F)
   (1) Fit the knock pins in the knock pin holes of the cylinder ASSY.
   (2) Assemble the 12 mm O-ring, SV plate, and cylinder head (F) in this order.

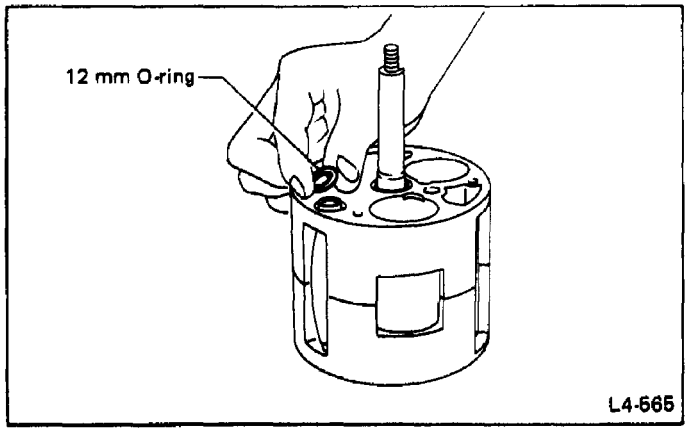

Fig. 50

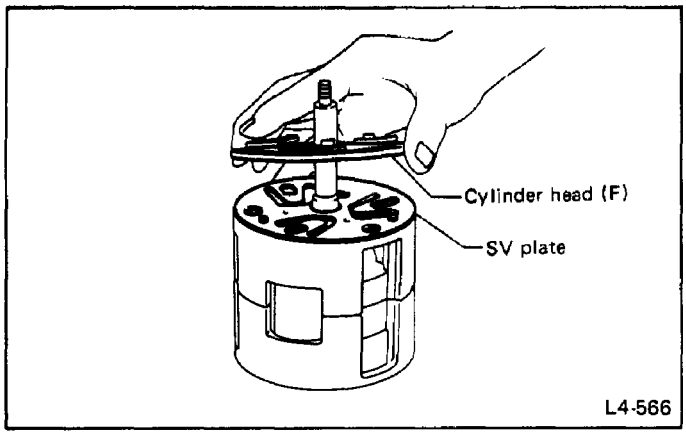

Fig. 51

a. Be careful not to confuse cylinder head (F) with cylinder head (R).
(Assemble it so that the gas pipe is aligned with the 12 mm hole.)

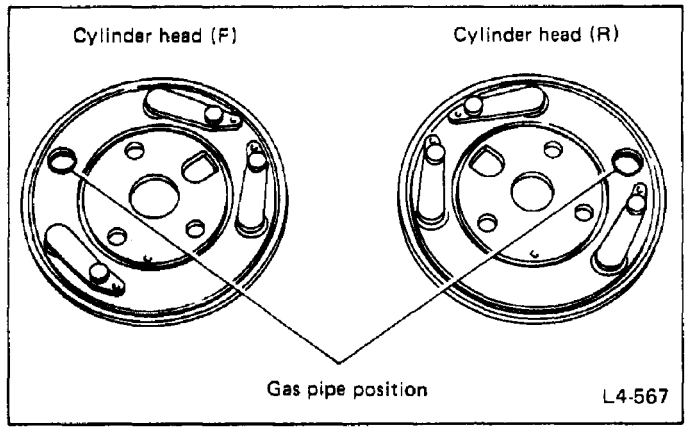

Fig. 52

b. Coat the O-ring with oil when assembling.
c. Carefully assemble the SV plate into correct position.
*** (Two knock pin holes will not fit if the plate is incorrectly positioned. Make sure the valve of the SV plate fits with the valve seat of the cylinder.)**

(3) Assemble the O-ring (110 mm, 63 mm) and seal ring using SHAFT SEAL INSTALLER (926120000).

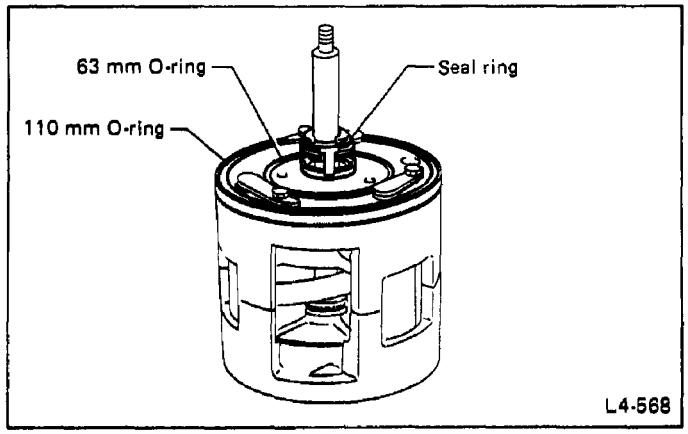

Fig. 53

a. Coat the O-ring and seal ring with oil when assembling.
b. Insert the seal ring by aligning the cut portion of the ring with the cut portion in the shaft.
c. Do not damage the O-ring of the seal ring with the sharp end of the key groove. Be sure not to damage the sliding surface.

(4) Install the cover end (F).

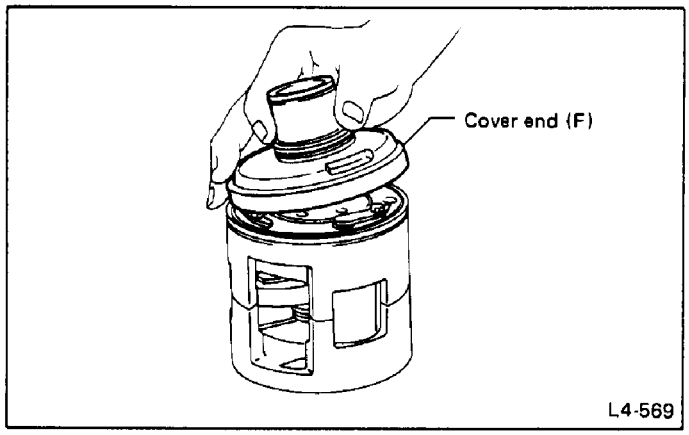

Fig. 54

Install the cover end (F) so that the terminal, when installed the coil, will face the same side as the shell inlet port.

(5) Attach the front cover tightener using FRONT COVER TIGHTENER (926170000).

Remove dirt and other foreign matter from the tapered surface at the end of the cover end (F).

(6) Install the shell packing.

a. Coat the packing with oil.
b. If the packing is protruded, re-adjust its position.

(7) Insert the shell.

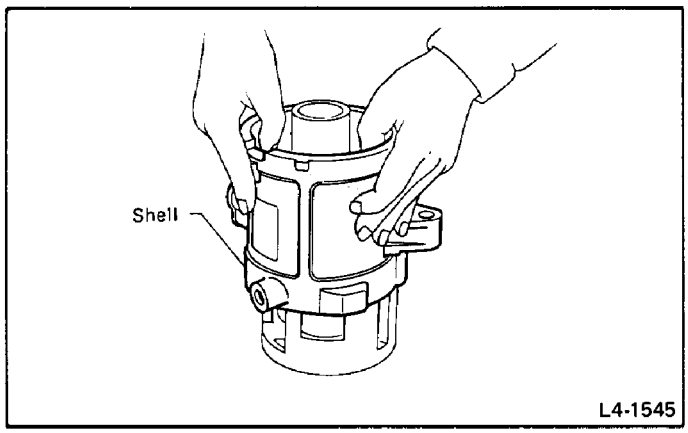

Fig. 55

a. Install the shell so the oil reservoir of the cylinder will be at the lower portion.

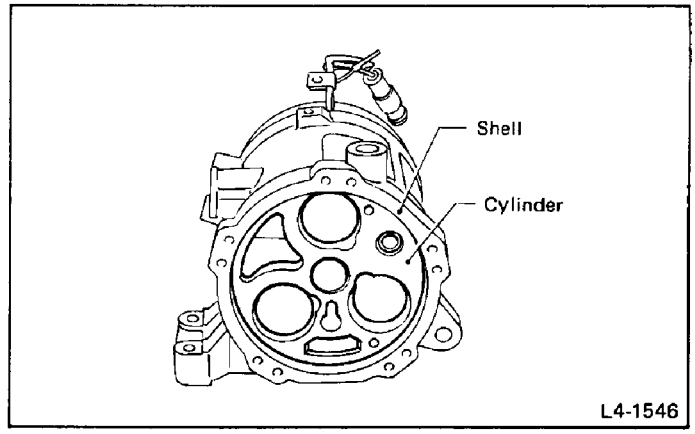

Fig. 56

b. After installing the shell, turn the assembly upside down by holding the shaft.

2) Assembling cover end (R)

(1) Fit the knock pin into the knock pin hole of the cylinder ASSY.

(2) Install the 12 mm O-ring, SV plate and cylinder head (R) in this order.

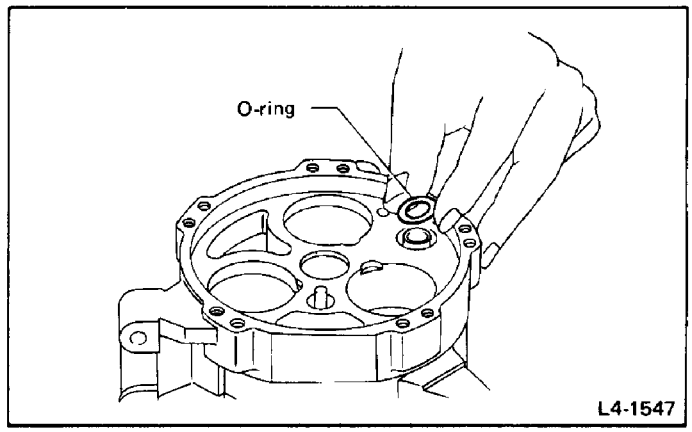

Fig. 57

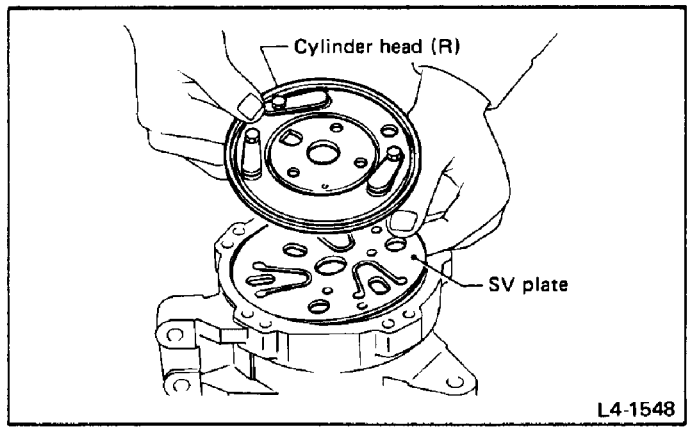

Fig. 58

a. Coat the O-ring with oil when assembling.
b. Carefully install the SV plate into correct position.

(3) Install the O-rings.
110 mm, 63 mm

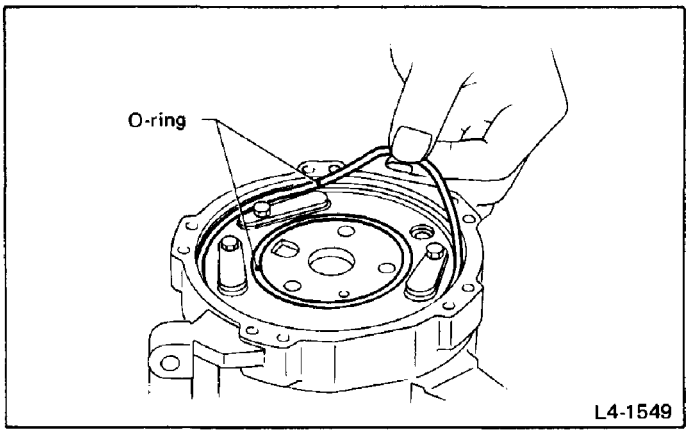

Fig. 59

Coat the O-rings with oil when assembling.

(4) Install the 115 mm O-ring.

Coat the O-ring with oil when assembling.

(5) Install the cover end (R).

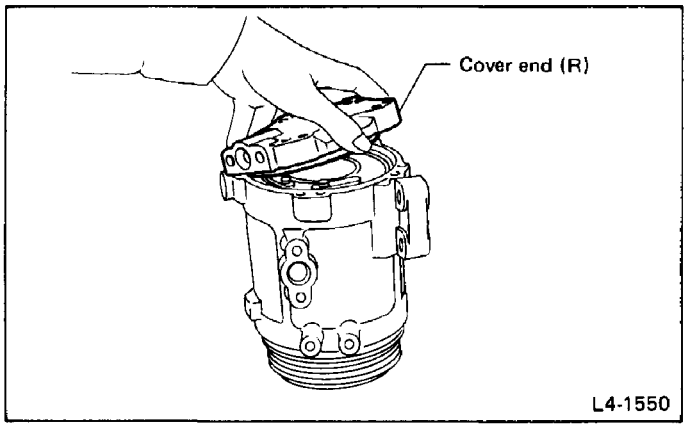

Fig. 60

(6) Tighten the 10-mm hexagon socket head bolts together with the wave washers using hexagon wrench, torque wrench and 5-mm hexagon socket wrench.

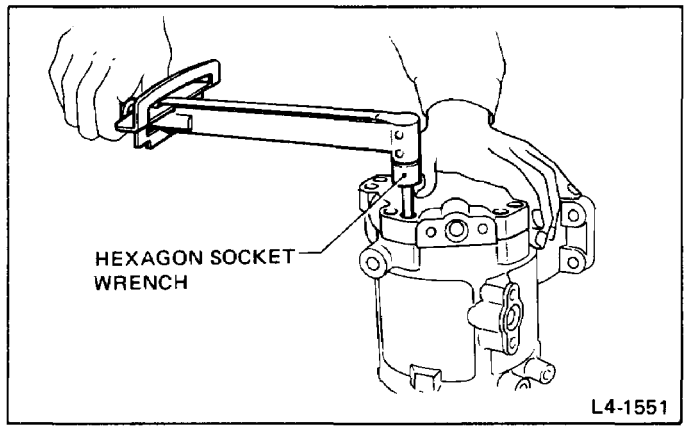

Fig. 61

Tighten bolts lightly by diagonal selection, and finally tighten to the torque of 19 to 21 N·m (1.9 to 2.1 kg-m, 14 to 15 ft-lb).

3) Installing shaft seal
(1) Install the cover plate fitted in advance with the 28 mm O-ring in its outer groove into the cover end (F) using SHAFT SEAL INSTALLER (926120000).

a. Check the O-ring for damage.
b. Apply oil to the O-ring.

(2) Install 32 mm snap ring using snap ring pliers.

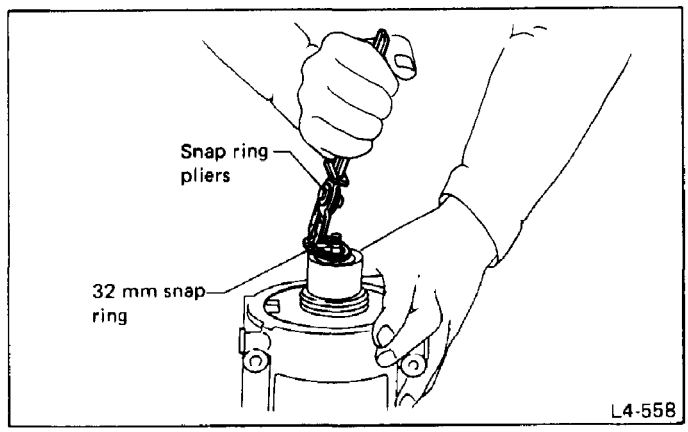

Fig. 62

Make sure the snap ring is fitted correctly into the groove.

4) Installing clutch ASSY
(1) After installing the stator, install 50 mm wedge ring using snap ring pliers.

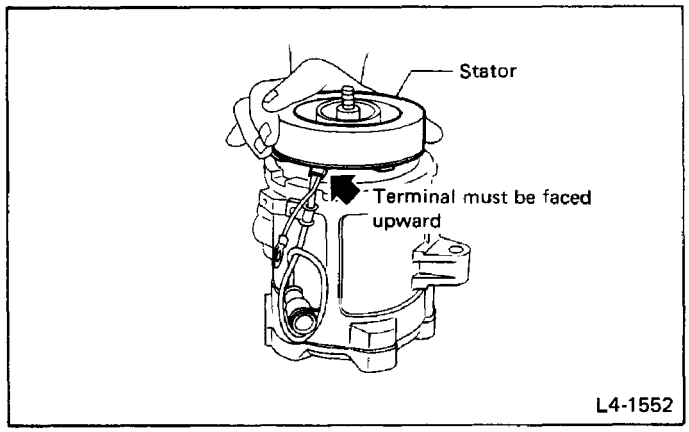

Fig. 63

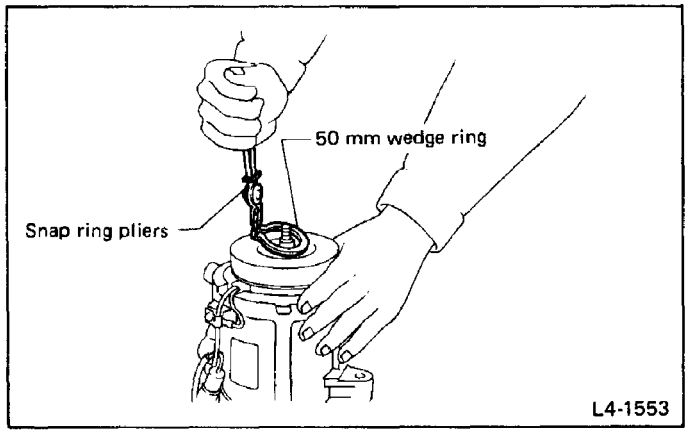

Fig. 64

a. Do not damage the coil bearing portion.
b. Install the wedge ring with its tapered surface facing up.

(2) Tighten 5 mm x 8 screws to secure the clamp using Phillips-head screwdriver and torque driver.

Tightening torque:
2.7 – 3.3 N·m (0.28 – 0.34 kg-m, 2.0 – 2.5 ft-lb)

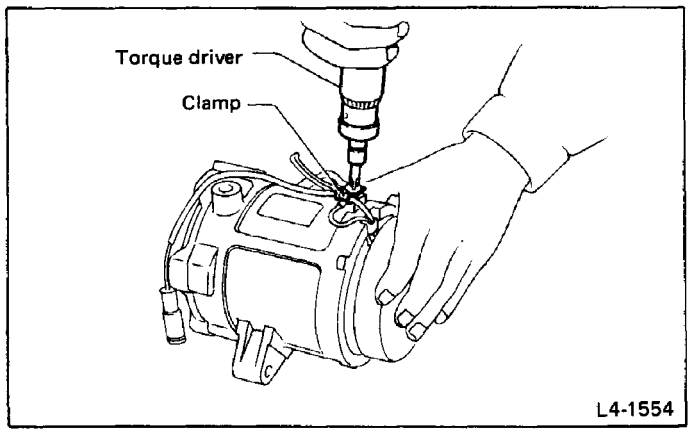

Fig. 65

a. Thoroughly wipe off dirt and oil from the clamp mounting surface on the compressor side.
b. Do not damage the lead and earth wires.
c. Avoid interference of the lead and earth wires with the pulley.

(3) Carefully install the rotor while rotating it by a hand.

Remove dirt and oil from the armature contacting surface.

(4) Install the 40 mm wedge ring using snap ring pliers.

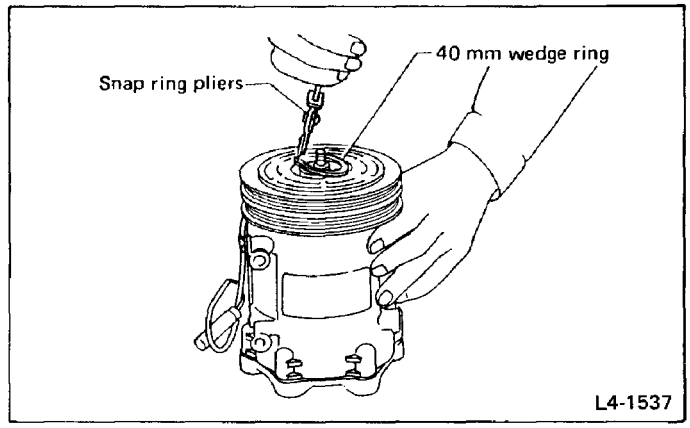

Fig. 66

Install the wedge ring with its tapered surface facing up.

(5) Install the key to the key groove in the shaft.

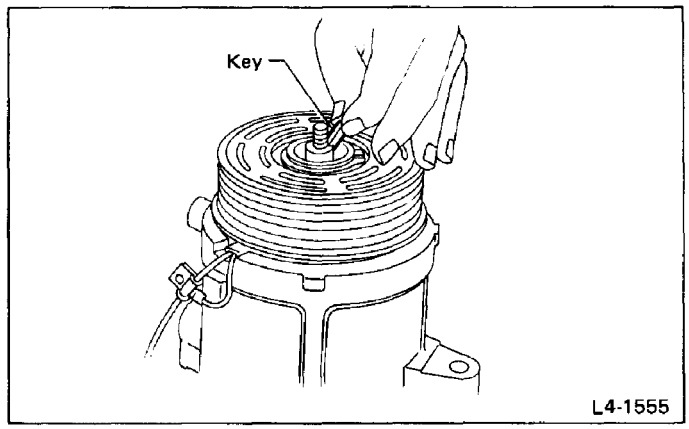

Fig. 67

Make sure the key is free from burrs or any other damage.

(6) Install the spacer ASSY using thickness gauge.

Spacer sizes:
Thickness 0.1 mm (0.004 in), 0.3 mm (0.012 in), 0.8 mm (0.031 in)

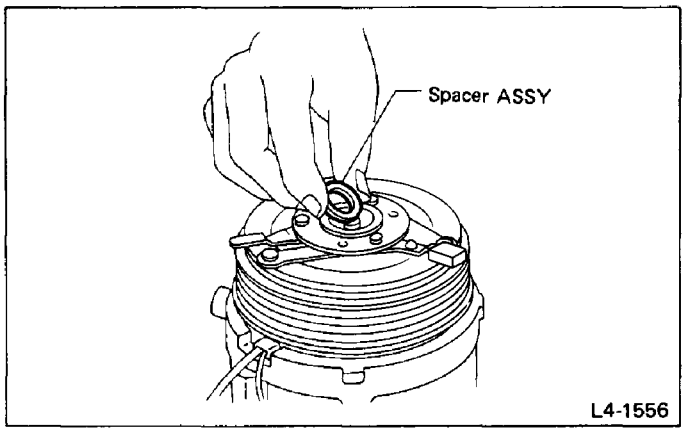

Fig. 68

Adjust the spacer ASSY so that the gap between the pulley and armature (armature gap) is within 0.5 to 0.8 mm (0.020 to 0.031 in).

(7) Install the armature while aligning it with the groove.

Remove dirt and oil from the rotor contacting surface.

(8) Install the 8 mm nut and hub nut using CLUTCH TIGHTENER (925770000), torque wrench and 13 mm socket.

Tightening torque:
19 – 21 N·m (1.9 – 2.1 kg-m, 14 – 15 ft-lb)

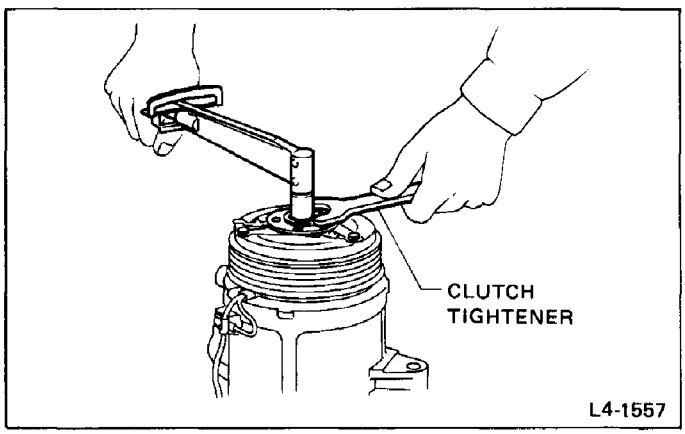

Fig. 69

5) Charging oil and refrigerant

(1) Charge oil using measuring cylinder and plastic oiler.

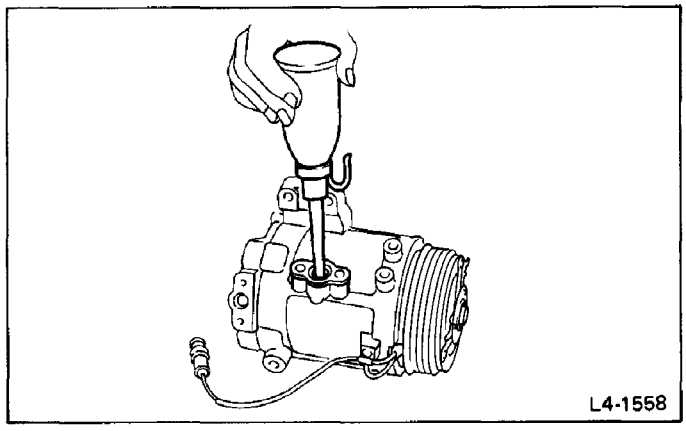

Fig. 70

Measure 150 mℓ (5.1 US fl oz, 5.3 Imp fl oz) of oil using a measuring cylinder, and charge oil from the inlet port using a plastic oiler. [If some oil is already charged in the cycle of the cycle carrier, adjust the amount of new oil to be charged so that the total amount will be 150 mℓ (5.1 US fl oz, 5.3 Imp fl oz) in the cycle.]

(2) Run the compressor on the cycle carrier for checking DV leakage, and also for checking compressor performance.

Before starting the operation, be sure to evacuate the refrigerant cycle to avoid air trapped inside.

(3) Charge refrigerant using INJECTOR NEEDLE (926190000).

a. Charging pressure 98 to 147 kPa (1.0 to 1.5 kg/cm², 14 to 21 psi).
b. Refer to "Charging Refrigerant" in manual.

TEST

NOISE TEST

Open the compressor outlet and inlet ports, and rotate the armature. No abnormal noises nor irregular rotation must be noted inside the compressor and magnet clutch.

COMPRESSION TEST

Close the compressor outlet or inlet port with a finger, and rotate the armature, and check for normal compression or suction.

GAS LEAKAGE TEST

Charge R-12 into the compressor and pressurize (to the saturation pressure). Then check the gas leakage by using an electric leak detector.

1) Immediately direct air to the shaft seal portion before measurement in order to blow off any gas from around the sea.

In this state, the deflection of the needle must be less than 1×10^{-4} mmHg-ℓ/sec (20 gr/year).

2) For other portions, deflection of needle must be less than 0.6×10^{-4} mmHg-ℓ/sec (12 gr/year).

CLUTCH ASSEMBLY OPERATION TEST

1) Rotate the rotor with a hand. No abnormal noise nor play must be noted.

2) Apply a voltage of 12V (battery voltage) across the coil terminals. The clutch plate must be attracted.

3) Make sure the armature gap is 0.5 to 0.8 mm (0.020 to 0.031 in).

BREAK-IN TEST

After completing the above-mentioned tests, install the compressor to the refrigerant cycle unit (if unavailable, actual vehicle), and perform break-in operation for 30 minutes under the following conditions:

Conditions:
Rotating speed: 1,800 rpm
High pressure: 1,324 ± 98 kPa (13.5 ± 1 kg/cm², 192 ± 14 psi)
Low pressure: 147 – 196 kPa (1.5 – 2 kg/cm², 21 – 28 psi)

DV LEAKAGE TEST

Stop the compressor when the pressure difference between the outlet side and inlet side is 686 kPa (7 kg/cm², 100 psi). Pressure rise in the inlet side must be less than 490 kPa (5 kg/cm², 71 psi) within five minutes.

Condenser

REMOVAL AND INSTALLATION

1) Disconnect battery negative terminal.
2) Discharge refrigerant from low pressure side.
3) Remove horn ASSY, stay, hood lock ASSY and front hood cable cover.

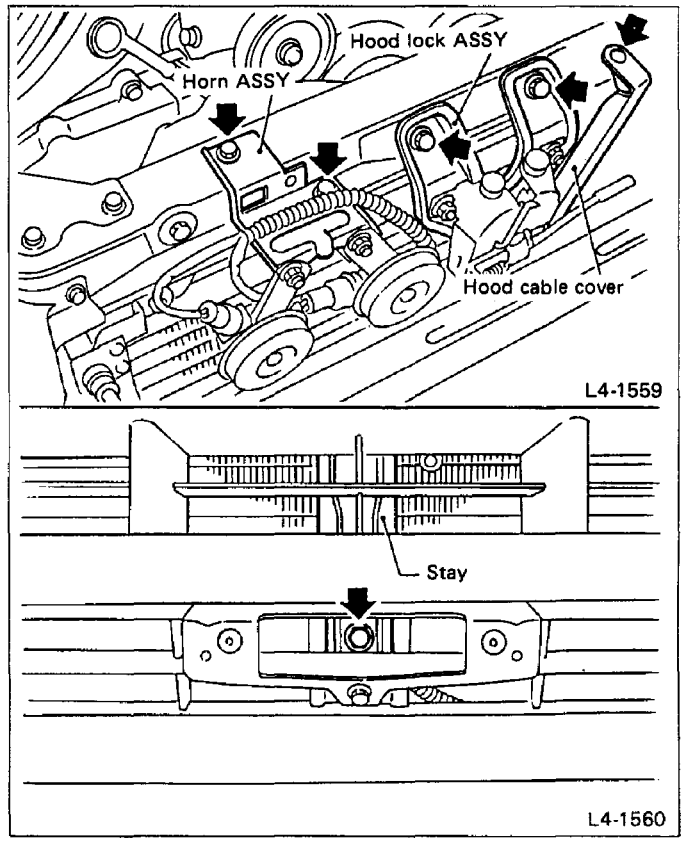

Fig. 71

4) Disconnect pipe connections.

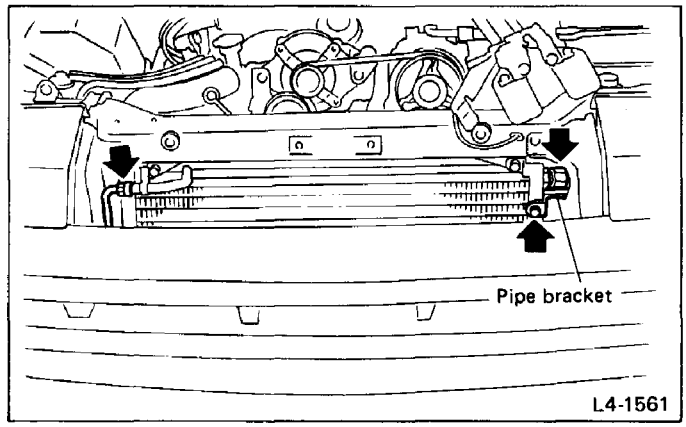

Fig. 72

5) Remove two upper bolts and then take out the condenser.

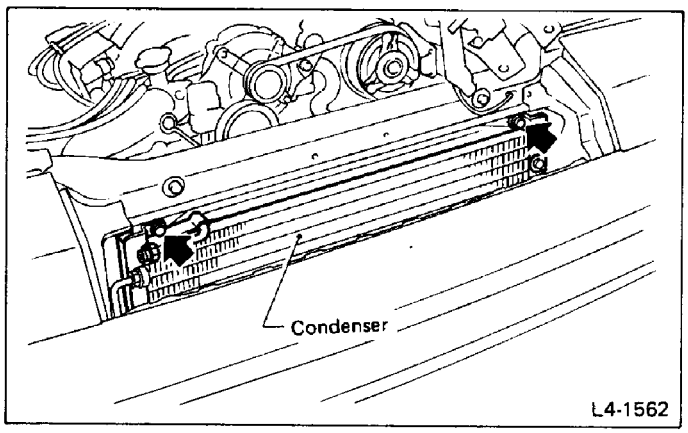

Fig. 73

6) The condenser should be installed in the reverse order in which it was removed.
When installing the condenser, pay attention to the following:

Before connecting the pipe, be sure to apply oil to the periphery of O-ring.

Tightening torque:
Left-hand piping nut
15 – 25 N·m (1.5 – 2.5 kg-m, 11 – 18 ft-lb)
Right-hand piping nut
10 – 20 N·m (1.0 – 2.0 kg-m, 7 – 14 ft-lb)
Bracket bolt
5 – 10 N·m (0.5 – 1.0 kg-m, 3.6 – 7.2 ft-lb)
Upper bolts
15 – 25 N·m (1.5 – 2.5 kg-m, 11 – 18 ft-lb)

INSPECTION

1) Make sure the condenser fins are free from dust and insects. If the fins are clogged, clean by blowing air or water through them.

To prevent dust and water from getting into the condenser, this work must be done when the condenser is installed in an actual vehicle.

2) Check all of the condenser's parts to see if they show any sign of oil seepage. Should oil ooze or gas leak from a particular part, replace it with a new one.

Receiver Drier

REMOVAL AND INSTALLATION

1) Disconnect battery negative terminal.
2) Discharge refrigerant.
3) Remove canister and place it on the engine.
4) Disconnect two pipes from receiver drier.

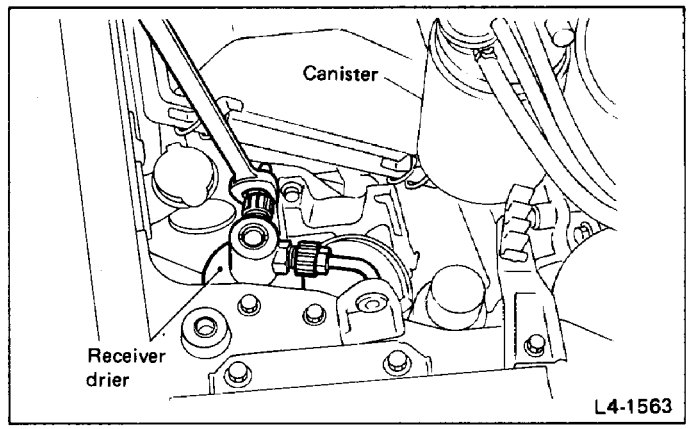

Fig. 74

5) Remove receiver drier by removing mounting bolts.

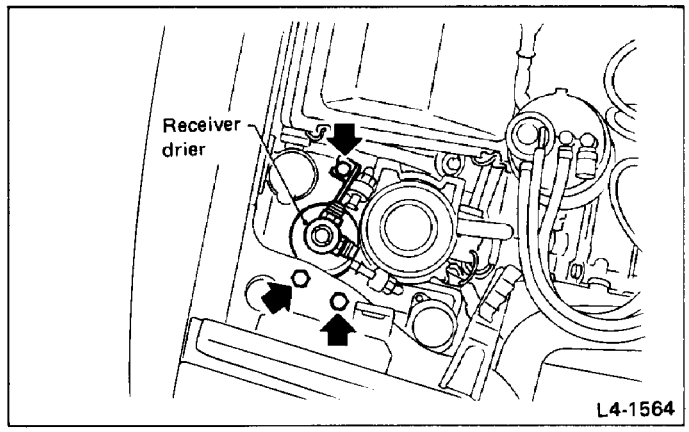

Fig. 75

The receiver drier contains a desiccant. Be sure to put a blind plug in the detached receiver drier to protect it from moisture.

6) Install the receiver drier in the reverse order of removal.

Tightening torque:
Mounting bolt
5 – 10 N·m (0.5 – 1.0 kg-m, 3.6 – 7.2 ft-lb)
Pipe nut
10 – 20 N·m (1.0 – 2.0 kg-m, 7 – 14 ft-lb)

Evaporator

REMOVAL AND INSTALLATION

1) Disconnect battery negative terminal.
2) Discharge refrigerant.
3) Disconnect discharge pipe, suction pipe and grommets.

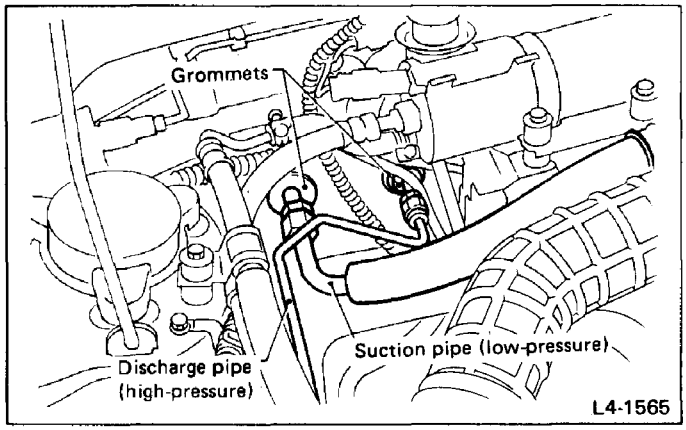

Fig. 76

4) Remove under cover trim.
5) Remove pocket ASSY.
6) Disconnect wiring harness from evaporator thermostat.
7) After removing two bands, remove evaporator.
8) Install the evaporator in the reverse order of removal.

When installing the evaporator in the car body, make sure the wiring harness and vacuum hose do not get caught between the body parts.

DISASSEMBLY & ASSEMBLY

1) Using a flat-bladed screwdriver, remove the eight clamps and the evaporator upper case.

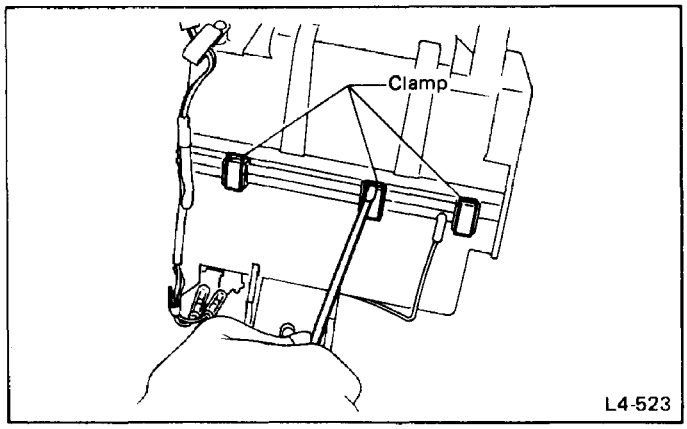

Fig. 77

2) Remove lower case from evaporator.
3) Remove the component parts from evaporator.
   (1) Thermostat
   (2) Disconnect the connection between the expansion valve and pipe from receiver drier.
   (3) Remove the expansion valve from the header pipe.

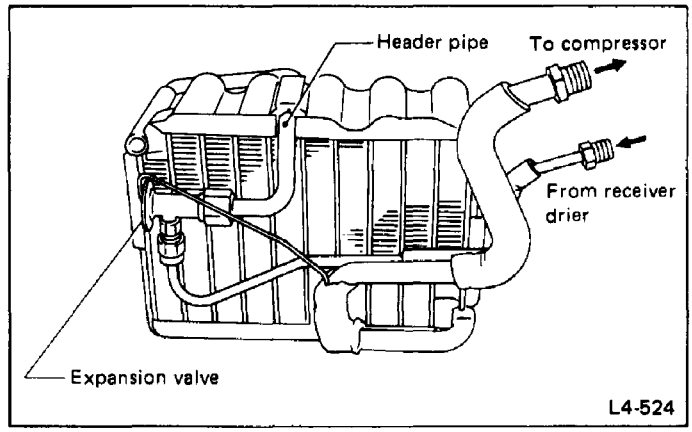

Fig. 78

4) Check to see if the evaporator fins are clogged. If they are, clean them with compressed air.

Water must never be used to clean the evaporator.

5) Check parts that have been removed for cracks or scratches, and repair or replace them with new ones, if necessary.
6) Reassemble the evaporator in the reverse order of disassembly. Observe the following points during the reassembly process:
   (1) Confirm that the O-ring is inserted in the specified position.
   (2) Tightening torque

Tightening torque:
Expansion valve's mounting nut
2.5 – 4.4 N·m (0.25 – 0.45 kg-m, 1.8 – 3.3 ft-lb)
Discharger pipe union nut
10 – 20 N·m (1.0 – 2.0 kg-m, 7 – 14 ft-lb)
Nut on discharge side
10 – 20 N·m (1.0 – 2.0 kg-m, 7 – 14 ft-lb)
Nut on suction side
20 – 29 N·m (2.0 – 3.0 kg-m, 14 – 22 ft-lb)

Condenser Fan Assembly

REMOVAL AND DISASSEMBLY

1) Disconnect battery negative terminal.
2) Remove pulser.
3) Remove the bolts from upper side of fan shroud.

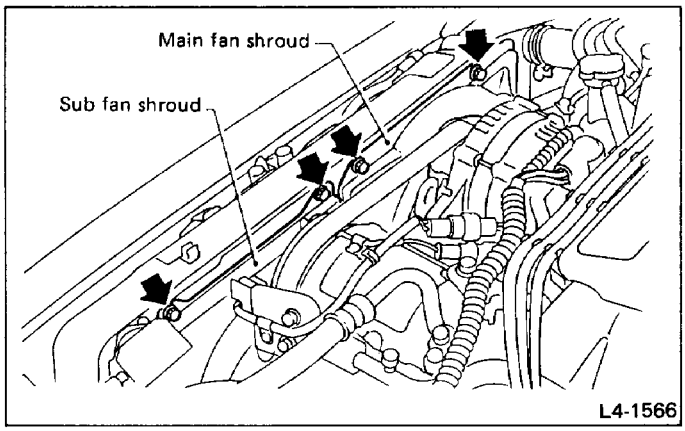

Fig. 79

4) Raise the car.
5) Disconnect the fan motor connector, and remove the bolt from lower side of fan shroud.

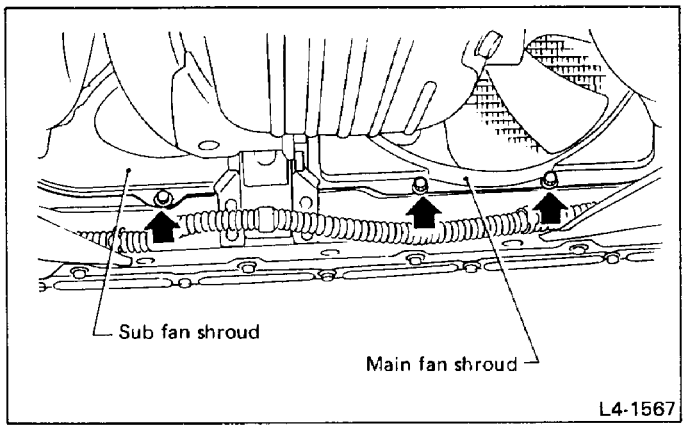

Fig. 80

6) Lower car to the floor.
7) Remove condenser fan assembly.
8) Remove fan motor and fan from shroud.

Fan and fan motor are balanced and must not be separated.

INSTALLATION

Installation is in the reverse order of removal.

Tightening torque:
Fan motor ASSY to shroud:
5 – 10 N·m (0.5 – 1.0 kg-m, 3.6 – 7.2 ft-lb)
Condenser fan shroud to body:
5 – 10 N·m (0.5 – 1.0 kg-m, 3.6 – 7.2 ft-lb)

Flexible Hose

With the following cautions, replace flexible hoses with new ones if they are damaged or swollen.

(1) The flexible hoses should be free from twists and tension after they have been connected.
(2) The flexible hoses must not be bent forcibly.

REMOVAL

1) Disconnect battery negative terminal.
2) Discharge refrigerant.
3) Remove low pressure hose.
(1) Remove hose attaching bolts from compressor side.

Plug the opening to prevent foreign matter from getting in.

(2) Disconnect the connector at evaporator unit.

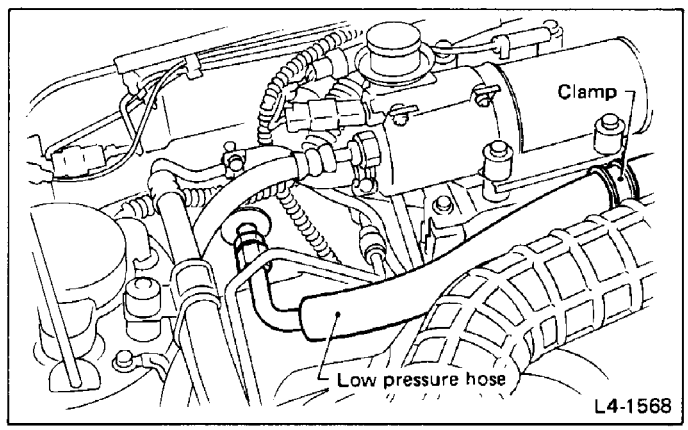

Fig. 81

(3) Unclamp the hose.

4) Remove high-pressure hose.

(1) Remove hose attaching bolts from compressor side.

Plug the opening to prevent foreign matter from getting in.

(2) Remove bolt holding pipe to condenser.

(3) Disconnect the pipe connection at condenser.

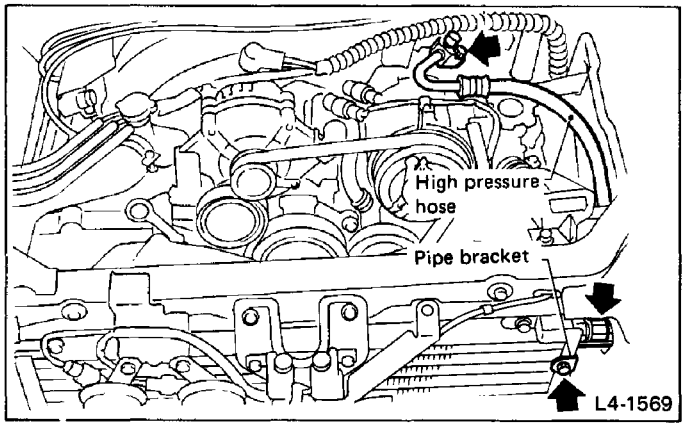

Fig. 82

INSTALLATION

Installation is in the reverse order of removal.
Tightening torque for flexible hose connections:

Tightening torque:
Low-pressure pipe to evaporator unit:
20 – 29 N·m (2.0 – 3.0 kg-m, 14 – 22 ft-lb)
High-pressure pipe to condenser:
15 – 25 N·m (1.5 – 2.5 kg-m, 11 – 18 ft-lb)
Pipe (high and low) to compressor:
15 – 25 N·m (1.5 – 2.5 kg-m, 11 – 18 ft-lb)
Pipe holding bolt (condenser side):
5 – 10 N·m (0.5 – 1.0 kg-m, 3.6 – 7.2 ft-lb)

Be sure to clamp and clip the hose.

Relay and Fuse

The air conditioner relay, main fan control relay, and air conditioner fuse are installed as shown in the figures below.

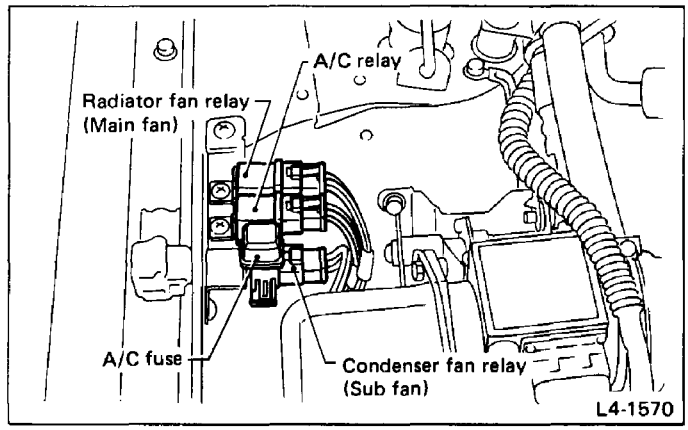

Fig. 83

INSPECTION

Check conduction with a circuit tester (ohm range) according to the following table.

- A/C relay, Fan control relay, Condenser fan relay

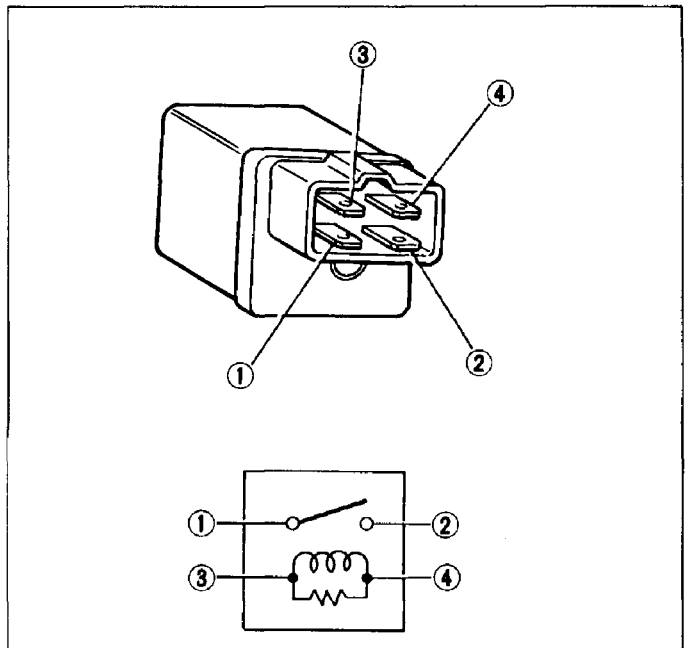

Fig. 84

Pressure switch

The pressure switch is provided with a main fan control switch and a high/low-pressure switch.

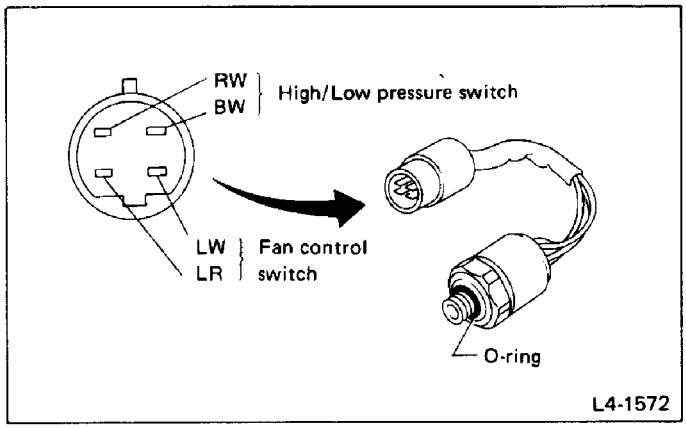

Fig. 85

REMOVAL AND INSTALLATION

1) Disconnect battery negative terminal.
2) Discharge refrigerant.
3) Remove canister and place it on the engine.
4) Disconnect pressure switch connector and remove pressure switch.

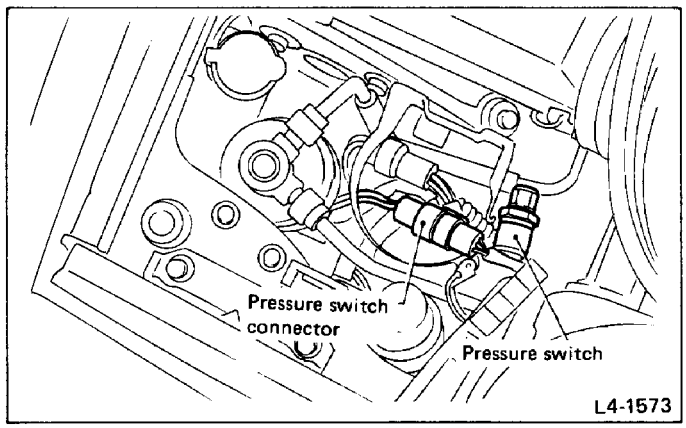

Fig. 86

5) Install pressure switch in the order of its removal.

Coat O-ring of pressure switch with compressor oil before installing pressure switch.

Tightening torque:
15 – 18 N·m (1.5 – 1.8 kg-m, 11 – 13 ft-lb)

Microswitch

REMOVAL AND INSTALLATION

1) Select "Heat" mode on control wing.
2) Lift up a steering wheel.
3) Remove driver's side lower cover.
4) Remove side ventilation duct.
5) Disconnect harness couplers.
6) To facilitate the work, push up the harness coming from meter ASSY into steering column lower cover.
7) Remove microswitch.
8) Installation is in the reverse order of removal.

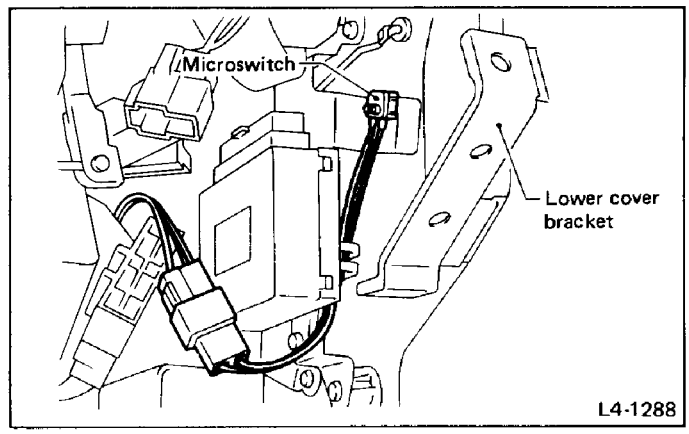

Fig. 87

Pulser Amplifier

FUNCTION

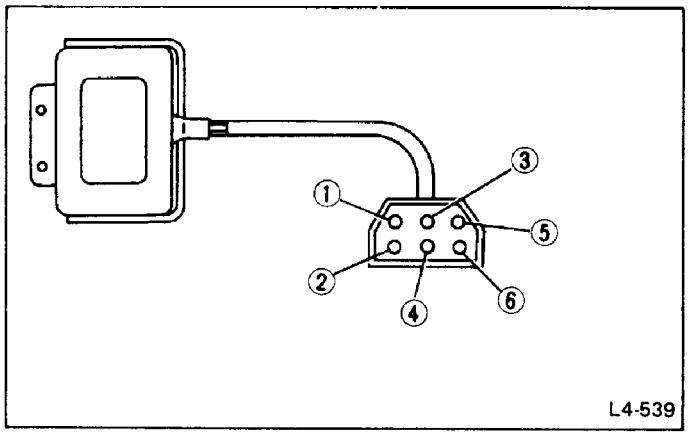

Fig. 88

REMOVAL AND INSTALLATION

1) Remove instrument panel lid and pocket.
2) Remove front shelf.
3) Disconnect body harness (6-pole connector) from amplifier.
4) Loosen the bolt installing evaporator and remove pulser amplifier.

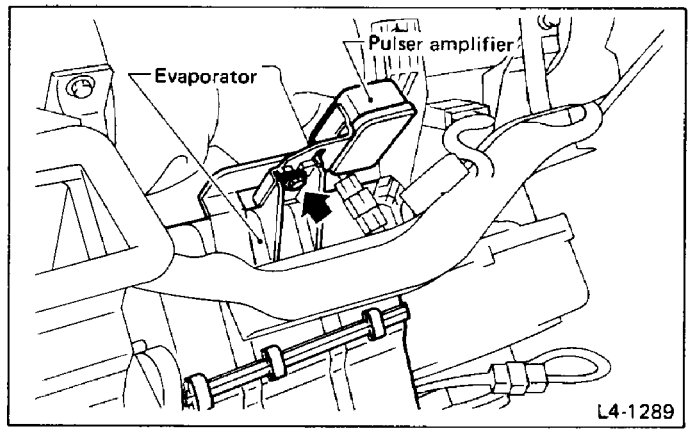

Fig. 89

5) Install in the reverse order of removal.

Terminal			Description
No.	Cable color	Destination	
1	RY	Power supply	Supplies current to the pulser amplifier through the air conditioner switch and triple (low-pressure) switch for the purpose of activating accessories.
2	Y	Ignition coil (–)	Transmits engine rpms to the pulser amplifier in pulse form.
3	R	Pulse sensor (–)	Transmits compressor rpms to the pulser amplifier for comparison with ignition pulses. When compressor rpms drop below 75 to 80% of engine rpms, the RB's grounding circuit will open.
4	G	Pulse sensor (+)	
5	RB	Magnetic clutch drive relay coil	When the thermostat activates to close the ground circuit with the air conditioner switch "ON", the clutch will engage. When compressor is locked, the thermostat activates to open the ground circuit, disengaging the clutch.
6	LB	Ground	The thermostat opens and closes the ground circuit, depending on the temperature of the evaporator.

TROUBLESHOOTING

Air Conditioning System Diagnosis

Follow this chart first when following troubles occur.

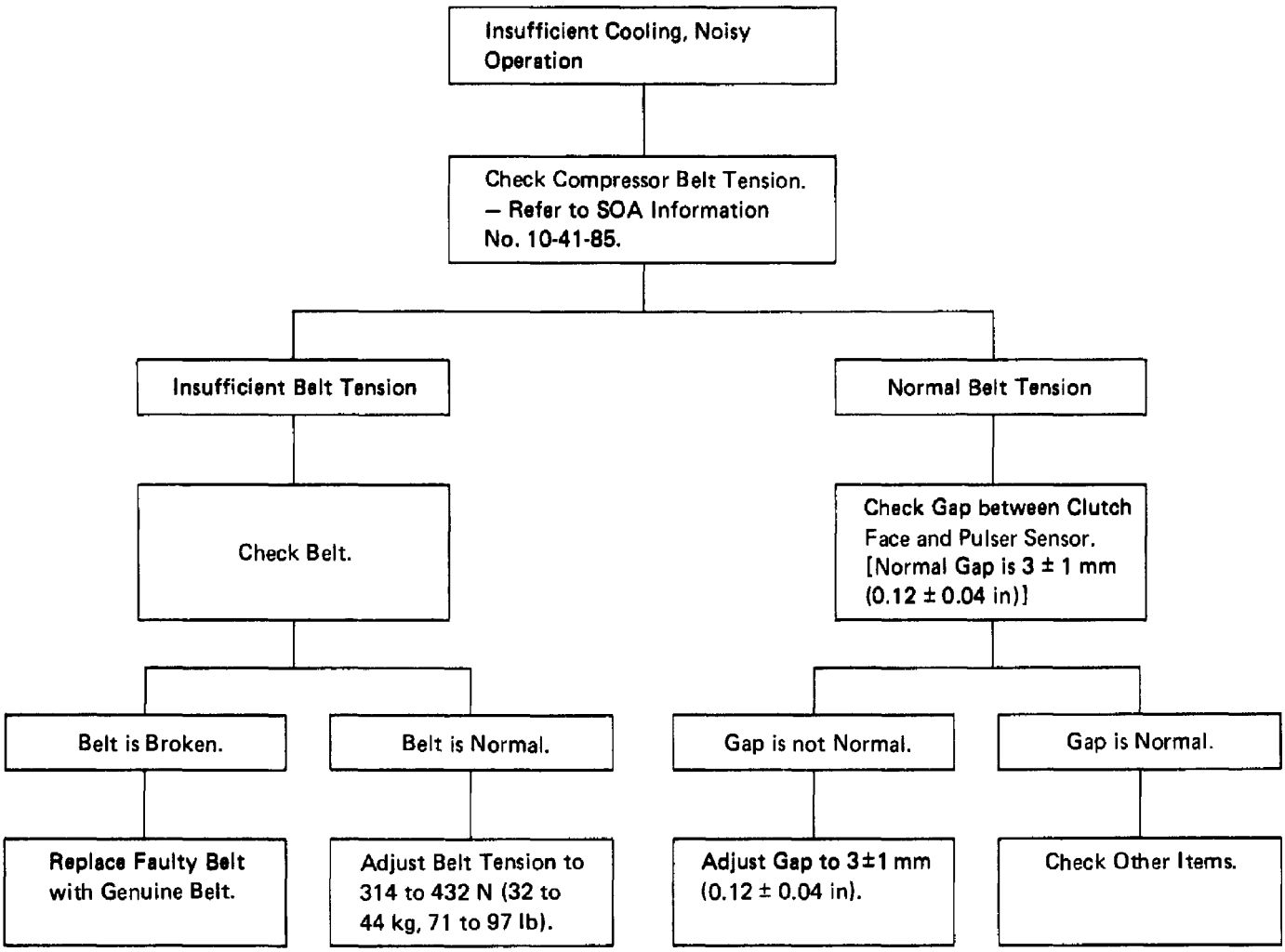

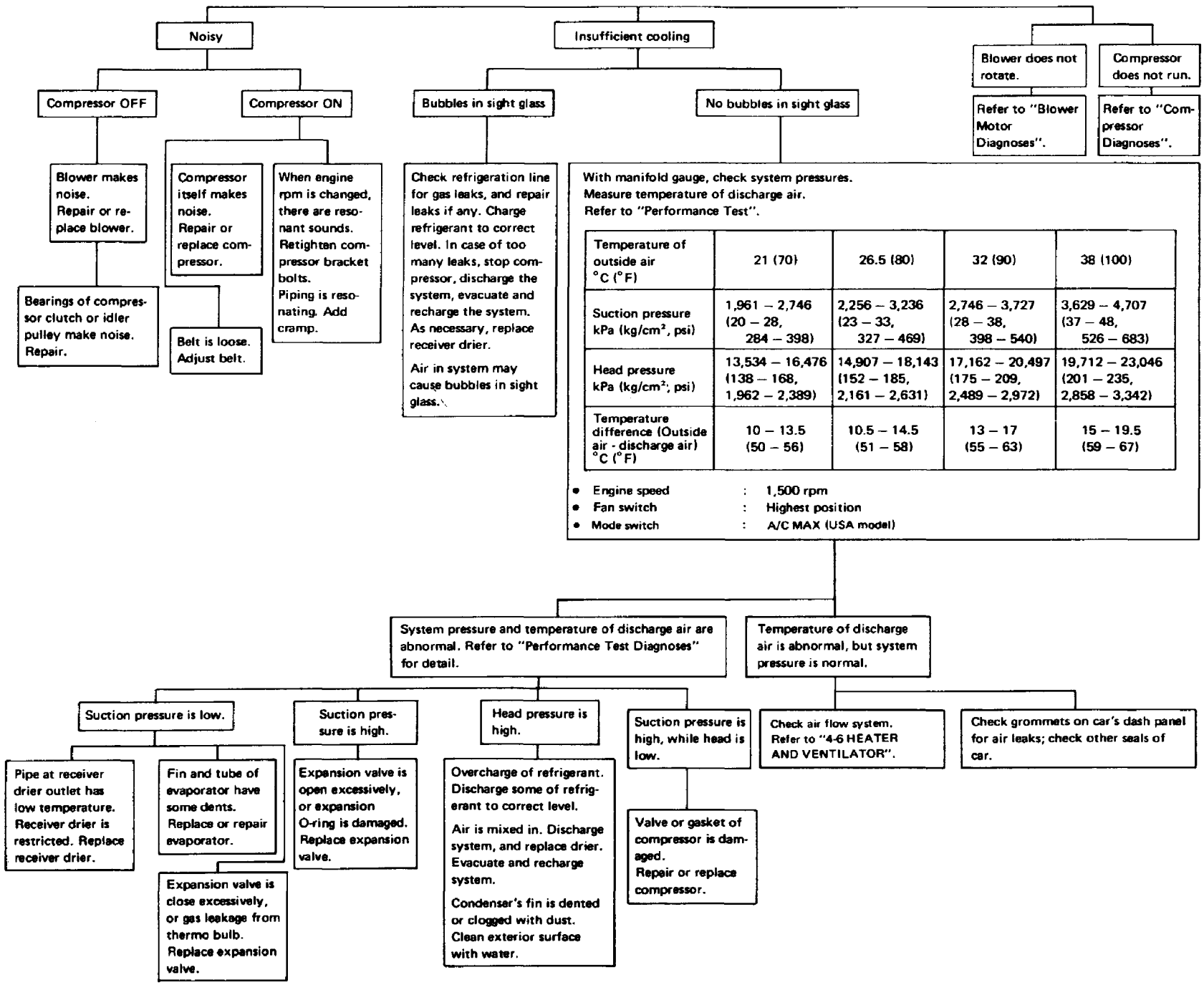

Temperature of outside air °C (°F)	21 (70)	26.5 (80)	32 (90)	38 (100)
Suction pressure kPa (kg/cm², psi)	1,961 – 2,746 (20 – 28, 284 – 398)	2,256 – 3,236 (23 – 33, 327 – 469)	2,746 – 3,727 (28 – 38, 398 – 540)	3,629 – 4,707 (37 – 48, 526 – 683)
Head pressure kPa (kg/cm²; psi)	13,534 – 16,476 (138 – 168, 1,962 – 2,389)	14,907 – 18,143 (152 – 185, 2,161 – 2,631)	17,162 – 20,497 (175 – 209, 2,489 – 2,972)	19,712 – 23,046 (201 – 235, 2,858 – 3,342)
Temperature difference (Outside air - discharge air) °C (°F)	10 – 13.5 (50 – 56)	10.5 – 14.5 (51 – 58)	13 – 17 (55 – 63)	15 – 19.5 (59 – 67)

Performance Test Diagnoses

Of various conditions caused to the air conditioning system, the characteristics revealed on manifold gauge reading are shown in the following.

As to the method of a performance test, refer to the item of "Performance Test".
Each shaded area on the following tables indicates a reading of the normal system when the temperature of outside air is 32.5°C (91°F).

Condition	Probable cause	Corrective action
INSUFFICIENT REFRIGERANT CHARGE 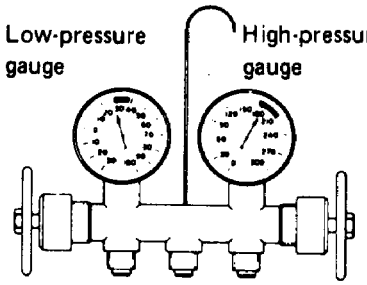 *Fig. 90* A26-069 Insufficient cooling. Bubbles appear in sight glass.	Refrigerant is small, or leaking a little.	1. Leak test. 2. Repair leak. 3. Charge system. **Evacuate, as necessary, and recharge system.**
ALMOST NO REFRIGERANT 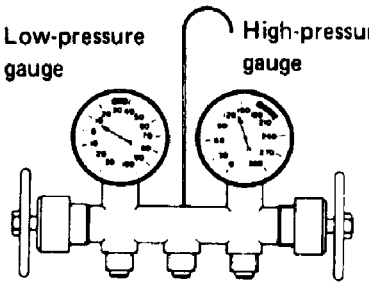 *Fig. 91* A26-070 No cooling action. In sight glass appear a lot of bubbles or something like mist.	Serious refrigerant leak.	**Stop compressor immediately.** 1. Leak test. 2. Discharge system. 3. Repair leak(s). 4. Replace receiver drier if necessary. 5. Check oil level. 6. Evacuate and recharge system.
FAULTY EXPANSION VALVE 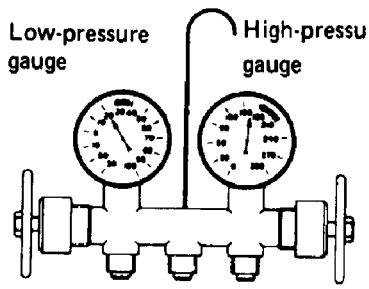 A26-071 *Fig. 92* Slight cooling. Sweating or frosted expansion valve inlet.	Expansion valve restricts refrigerant flow. • Expansion valve is clogged. • Expansion valve is inoperative. Valve stuck closed. Thermal bulb has lost charge.	If valve inlet reveals sweat or frost: 1. Discharge system. 2. Remove valve and clean it. Replace it if necessary. 3. Evacuate system. 4. Charge system. If valve does not operate: 1. Discharge system. 2. Replace valve. 3. Evacuate and charge system.

Condition		Probable cause	Corrective action
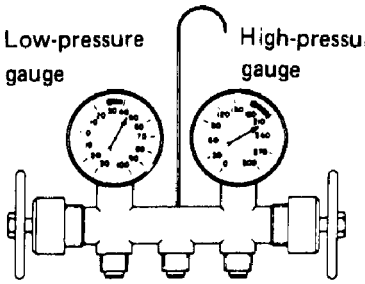 *Fig. 93* A26-072	Insufficient cooling. Sweated suction line.	Expansion valve allows too much refrigerant through evaporator.	Check valve for operation. If suction side does not show a pressure decrease, replace valve.
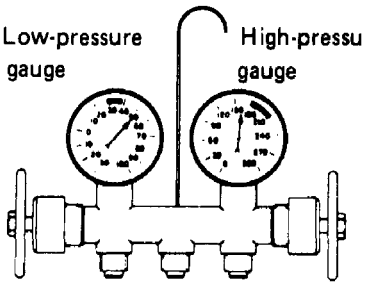 *Fig. 94* A26-073	No cooling. Sweating or frosted suction line.	Faulty seal of O-ring in expansion valve.	1. Discharge system. 2. Remove expansion valve and replace O-ring. 3. Evacuate and replace system.
AIR IN SYSTEM 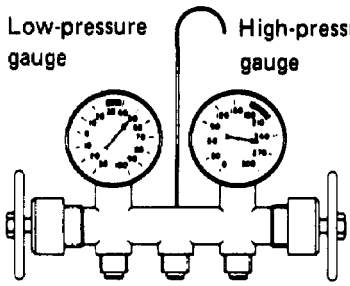 *Fig. 95* A26-074	Insufficient cooling. Sight glass shows occasional bubbles.	Air mixed with refrigerant in system.	1. Discharge system. 2. Replace receiver drier. 3. Evacuate and charge system.
MOISTURE IN SYSTEM 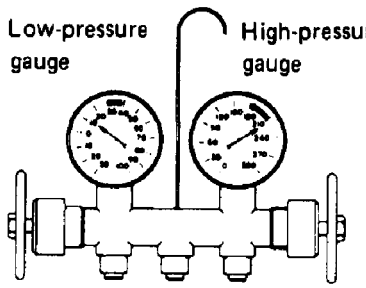 *Fig. 96* A26-075	After operation for a while, pressure on suction side may show vacuum pressure reading. During this condition, discharge air will be warm. As warning of this, reading shows 39 kPa (0.4 kg/cm^2, 6 psi) vibration.	Drier is saturated with moisture. Moisture has frozen at expansion valve. Refrigerant flow is restricted.	1. Discharge system. 2. Replace receiver drier (twice if necessary). 3. Evacuate system completely. (Repeat 30-minute evacuating three times.) 4. Recharge system.

Condition		Probable cause	Corrective action
FAULTY CONDENSER 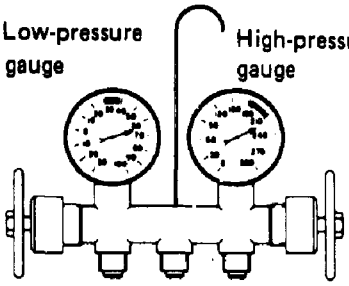 A26-076 *Fig. 97*	No cooling action: engine may overheat. Bubbles appear in sight glass of drier. Suction line is very hot.	Condenser is often found not functioning well.	• Check condenser cooling fan. • Check condenser for dirt accumulation. • Check engine cooling system for overheat. • Check for refrigerant overcharge. **If pressure remains high in spite of all above actions taken, remove and inspect the condenser for possible oil clogging.**
HIGH PRESSURE LINE BLOCKED 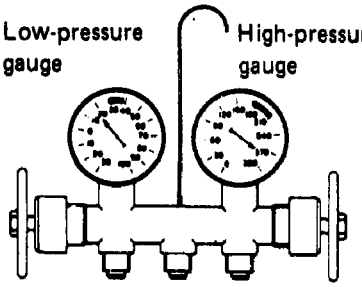 A26-077 *Fig. 98*	Insufficient cooling. Frosted high pressure liquid line.	Drier clogged, or restriction in high pressure line.	1. Discharge system. 2. Remove receiver drier or strainer and replace it. 3. Evacuate and charge system.
FAULTY COMPRESSOR 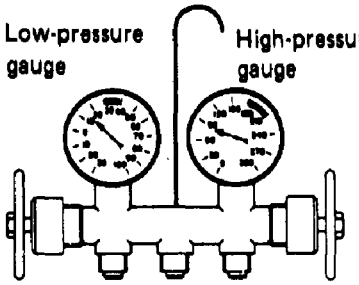 A26-078 *Fig. 99*	Insufficient cooling.	Internal problem in compressor, or damaged gasket and valve.	1. Discharge system. 2. Remove and check compressor. 3. Repair or replace compressor. 4. Check oil level. 5. Replace receiver drier. 6. Evacuate and charge system.

Blower Motor Diagnoses

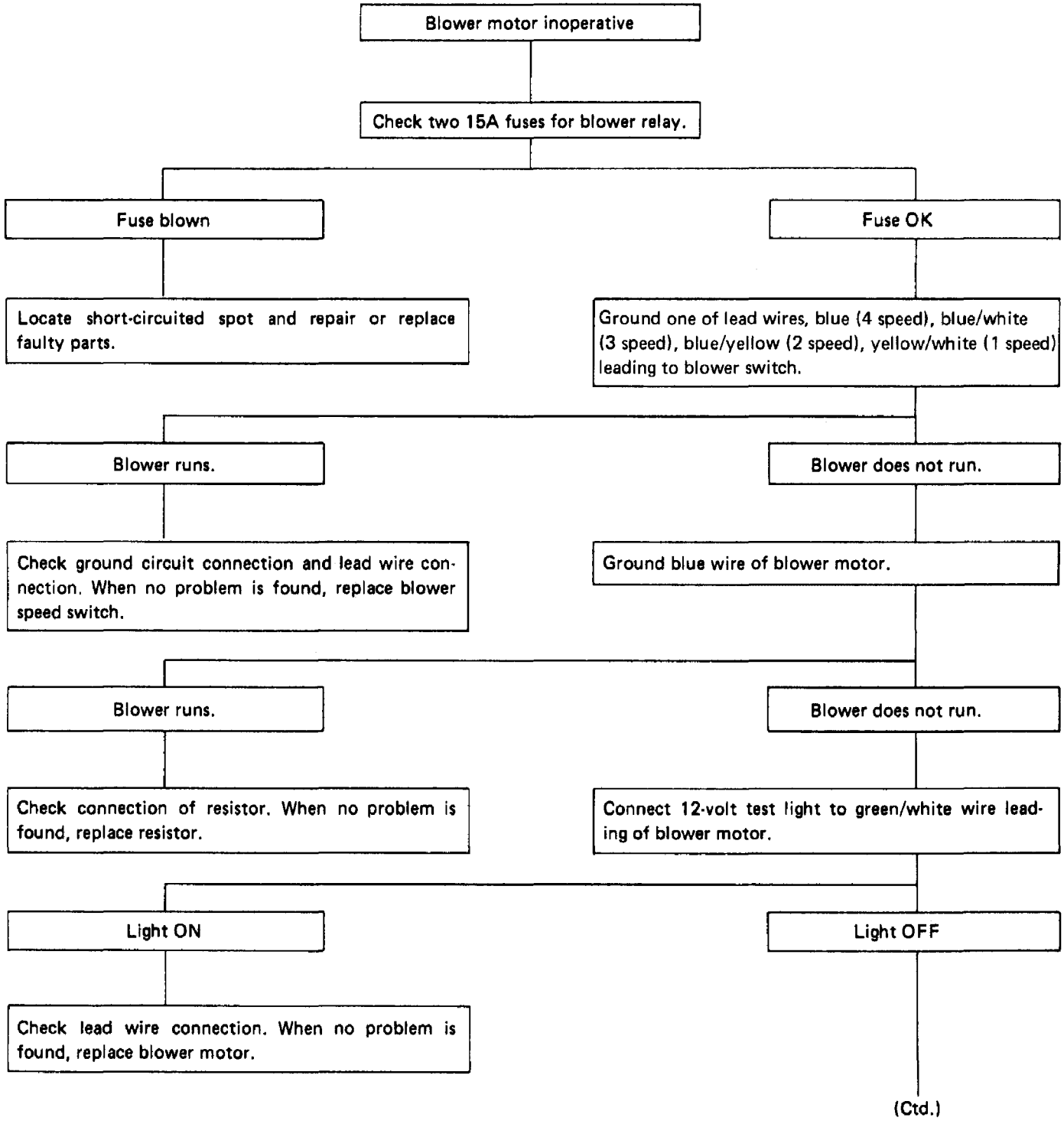

Connect 12-volt test light to blue wire leading to relay.

Light ON

Check lead wire connection.
When no problem is found, replace relay.

Light OFF

Check connector and check fuse holder, too.
Repair or replace damaged parts, if any.

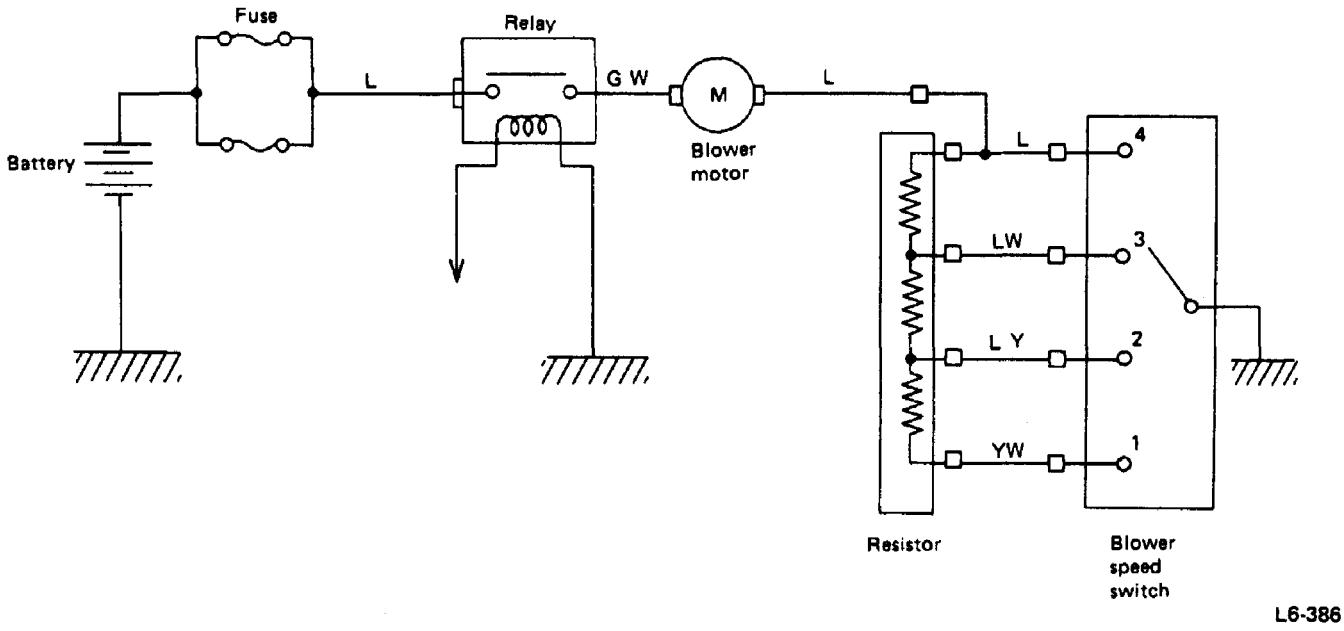

Fig. 100

Compressor Diagnoses

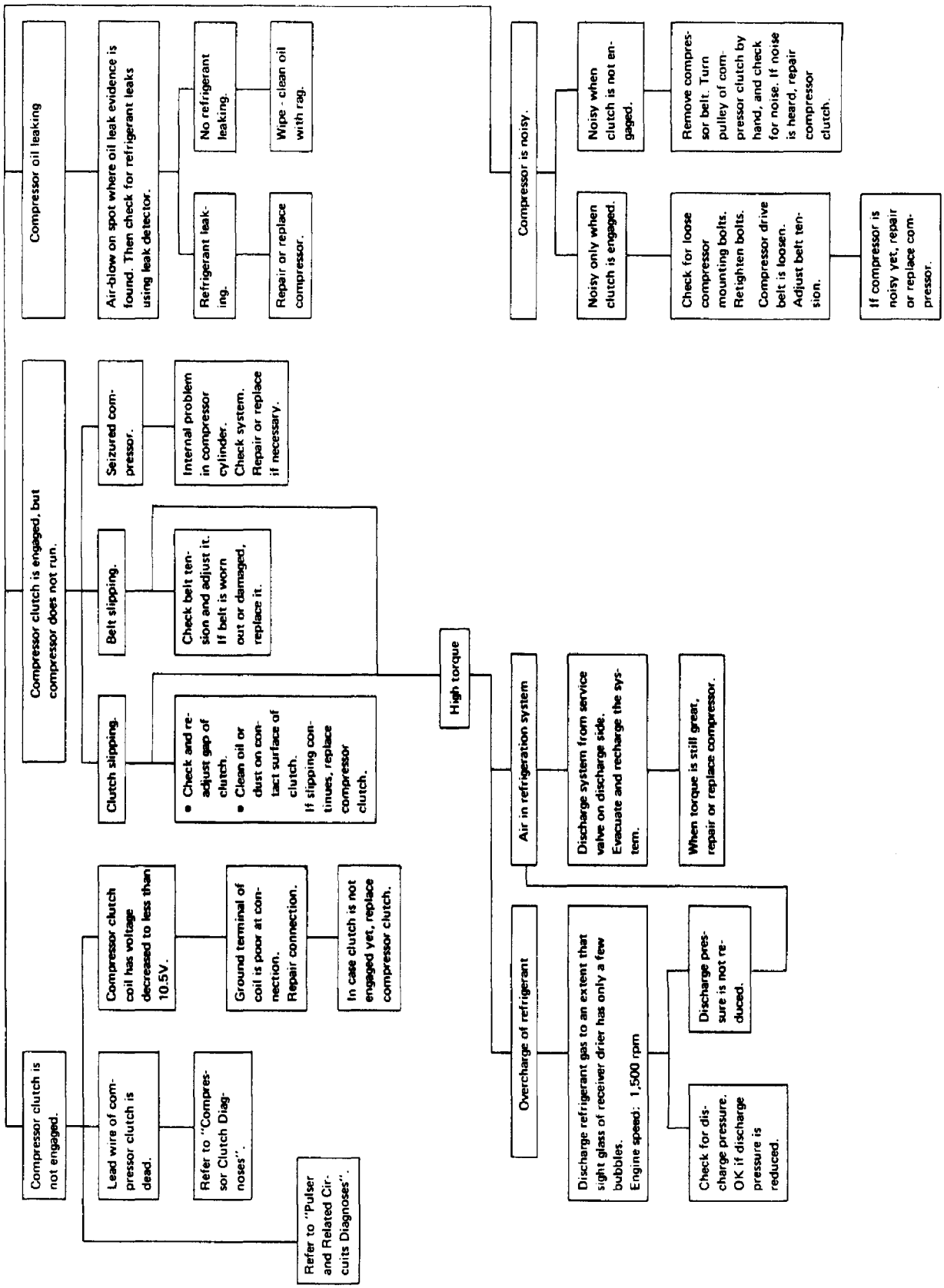

Compressor Clutch Diagnoses

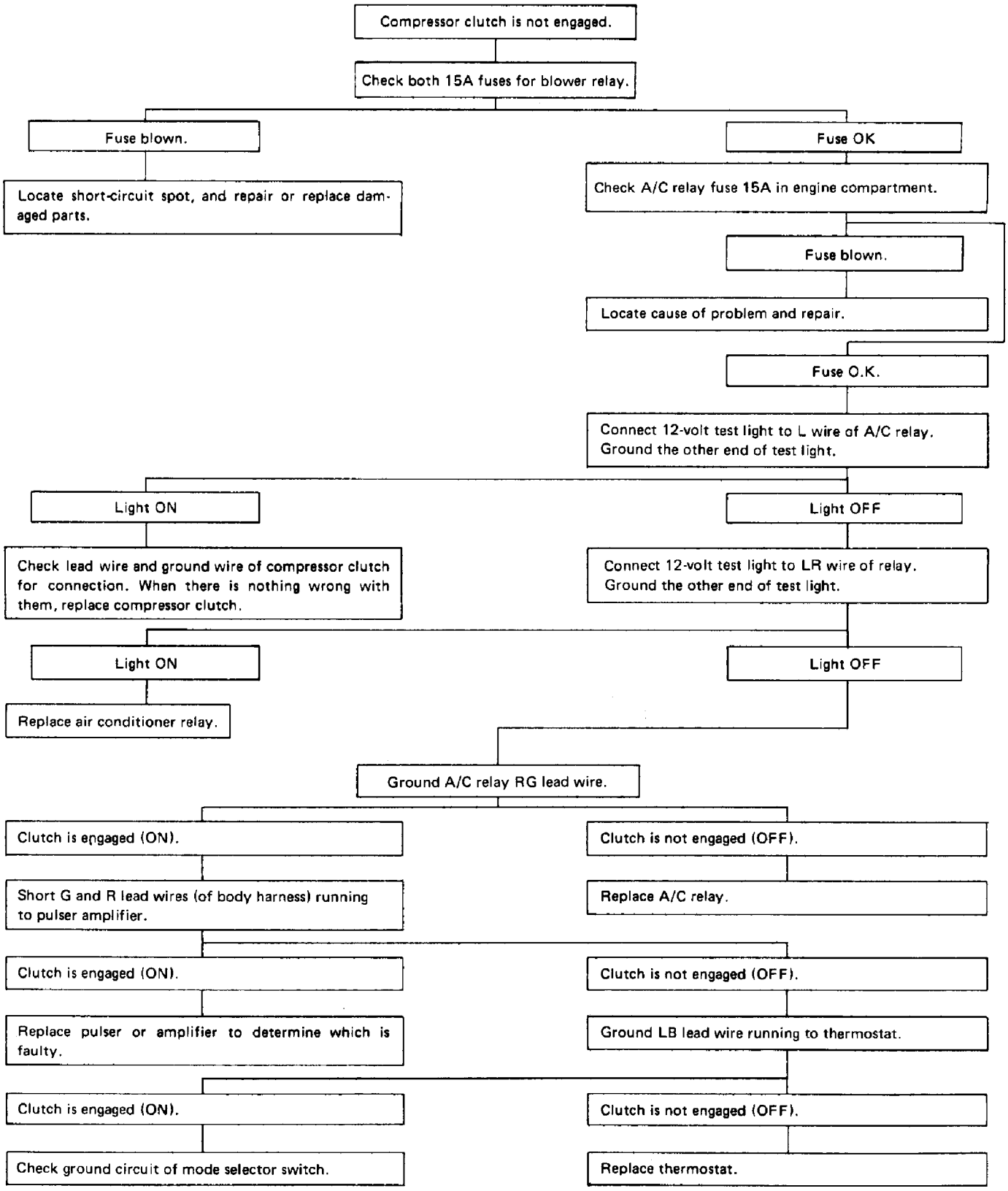

Radiator Fan (Main Fan) Diagnoses

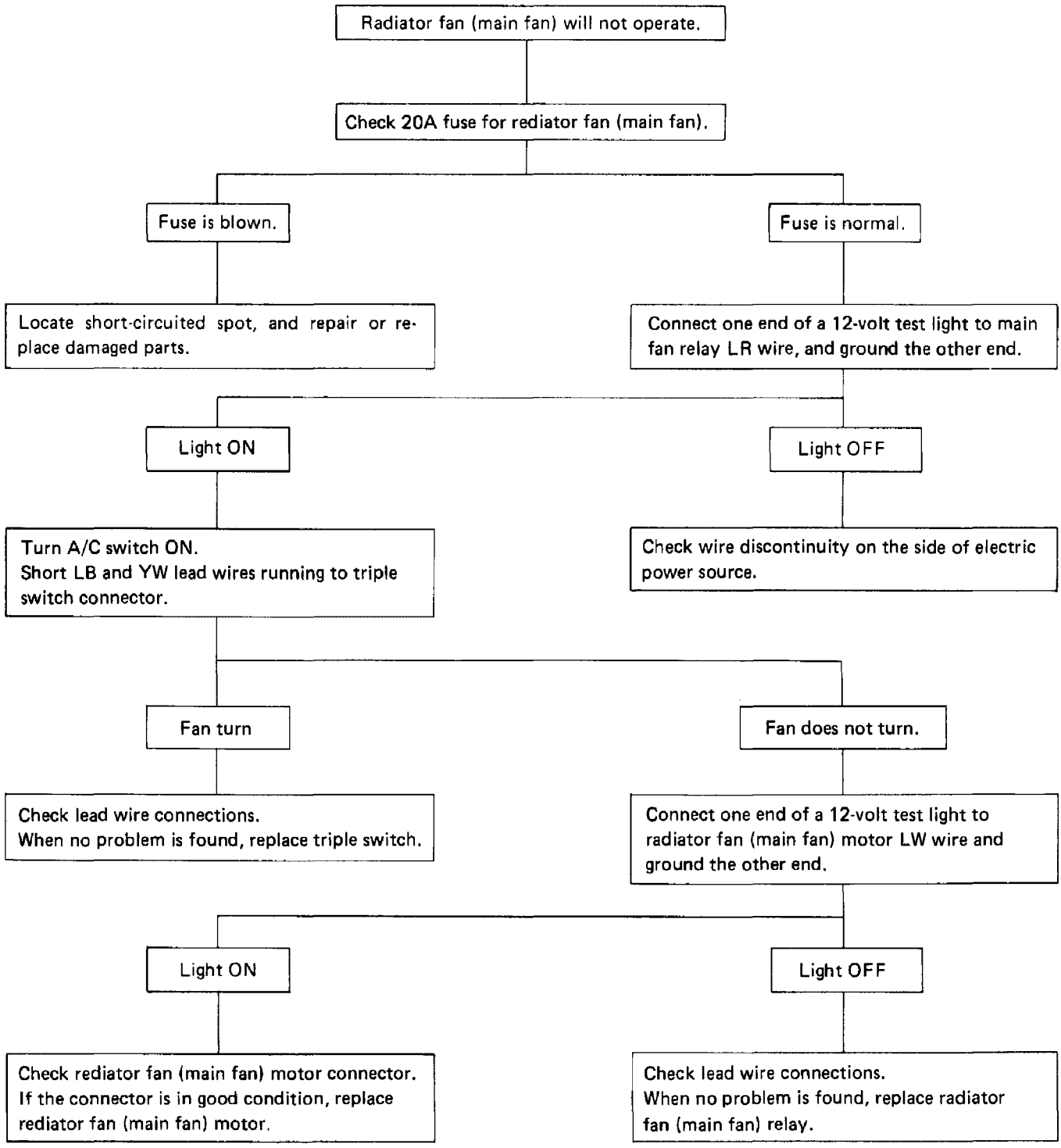

Condenser Fan (Sub Fan) Diagnoses

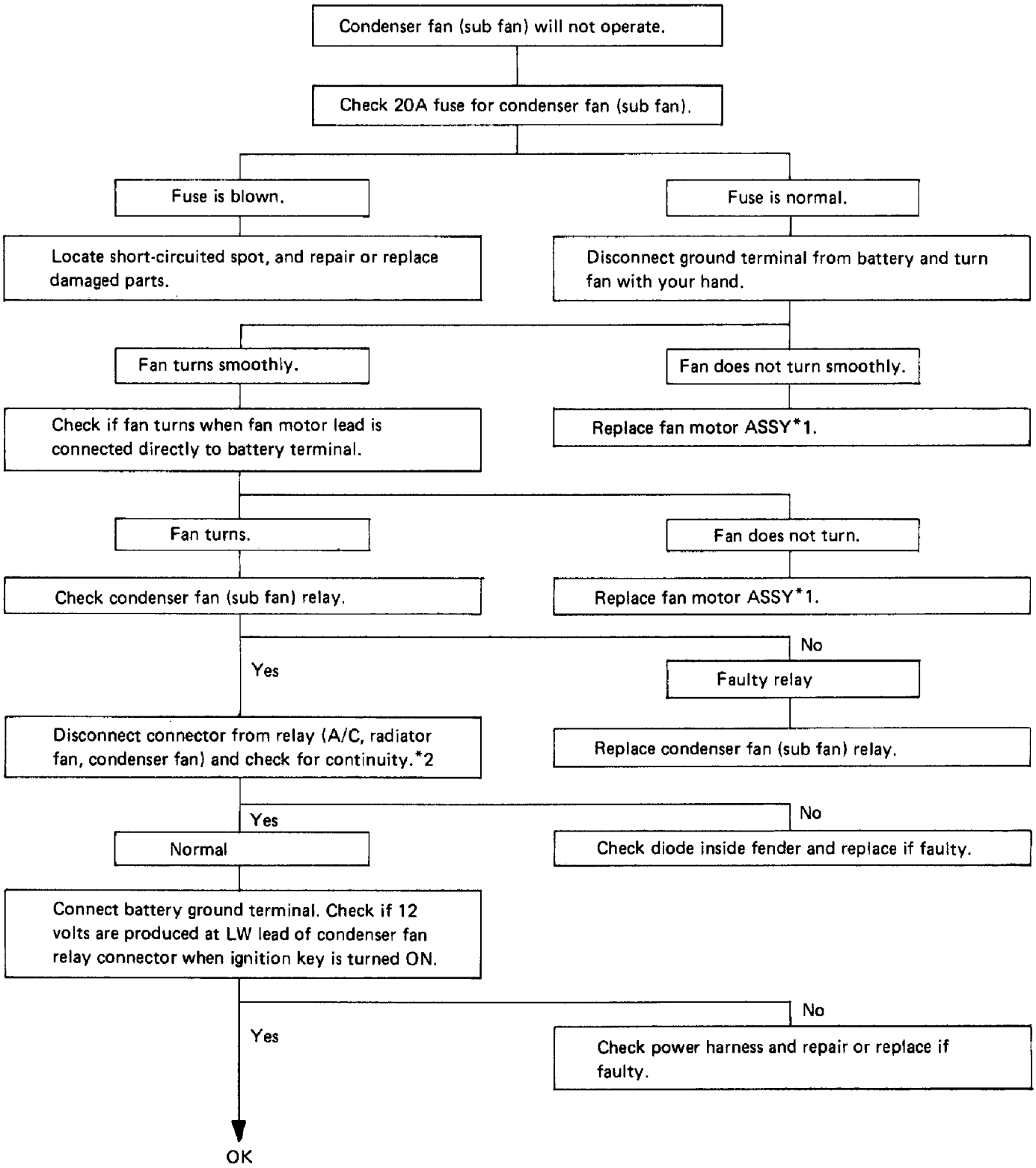

***1: Replace fan and fan motor as a unit because they are balanced.**
***2: Connect tester leads to LR leads of condenser fan relay connector, YW lead of radiator fan relay connector and L lead of A/C relay connector. Check for continuity, as shown in Table below.**

	Tester lead	
	Positive (+)	Negative (−)
No continuity	LR ——— L LR ——— YW	
Continuity	L ——— LR YW ——— LR	

Pulser and Related Circuits Diagnoses

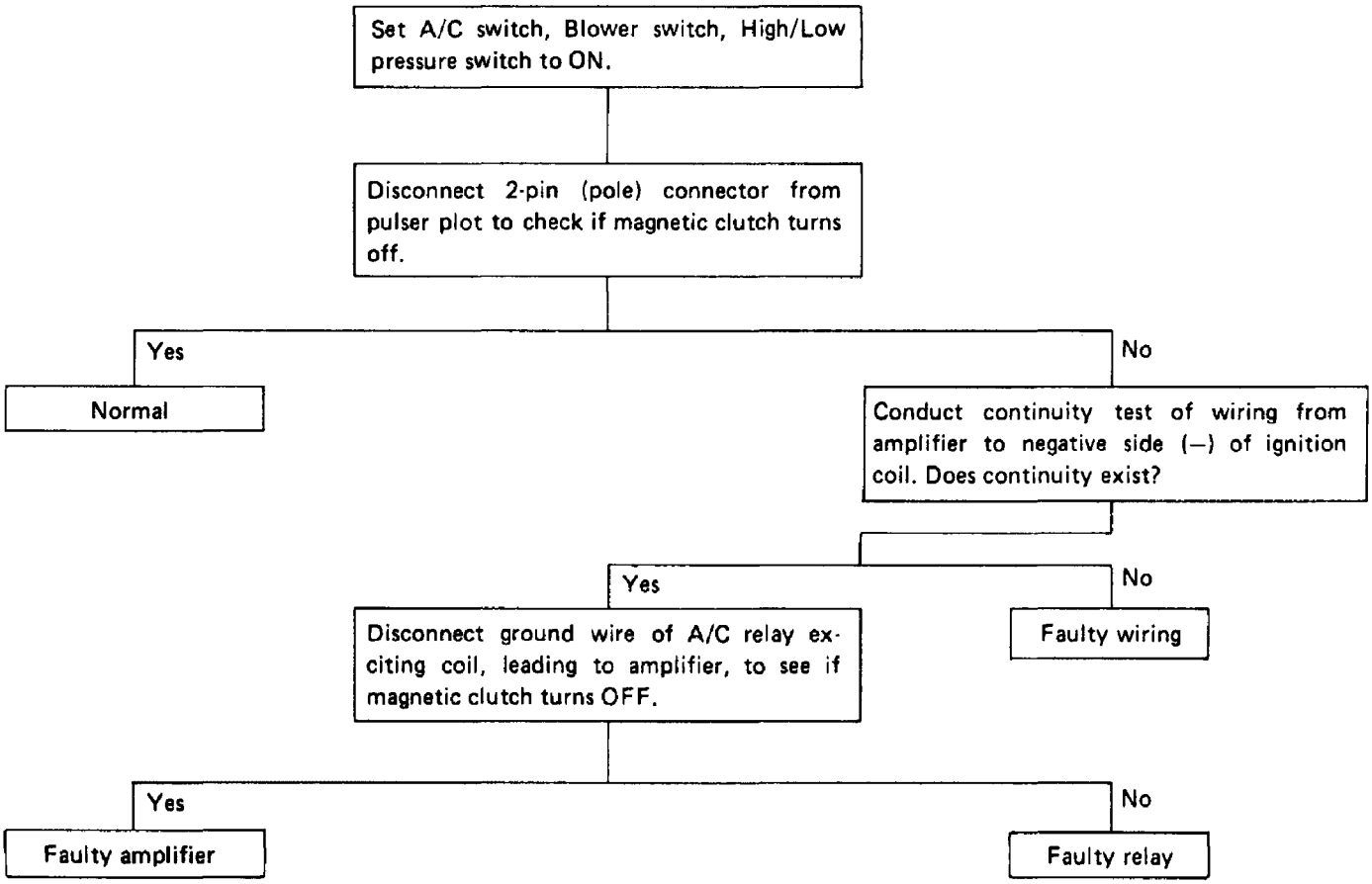

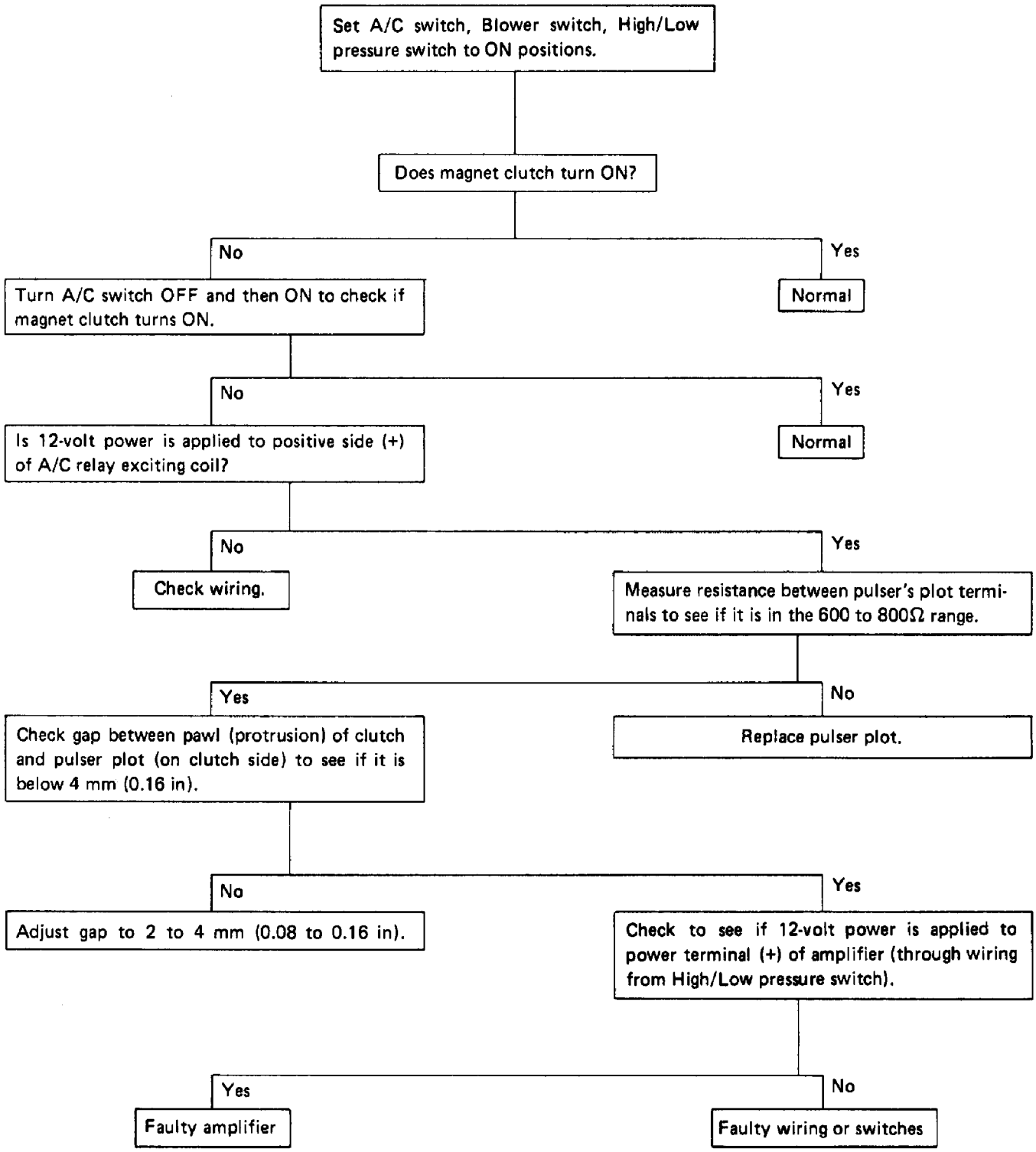
Set A/C switch, Blower switch, High/Low pressure switch to ON positions.
Does magnet clutch turn ON?
No
Yes
Normal
Turn A/C switch OFF and then ON to check if magnet clutch turns ON.
No
Yes
Normal
Is 12-volt power is applied to positive side (+) of A/C relay exciting coil?
No
Yes
Check wiring.
Measure resistance between pulser's plot terminals to see if it is in the 600 to 800Ω range.
Yes
No
Check gap between pawl (protrusion) of clutch and pulser plot (on clutch side) to see if it is below 4 mm (0.16 in).
Replace pulser plot.
No
Yes
Adjust gap to 2 to 4 mm (0.08 to 0.16 in).
Check to see if 12-volt power is applied to power terminal (+) of amplifier (through wiring from High/Low pressure switch).
Yes
No
Faulty amplifier
Faulty wiring or switches

Air Conditioning System

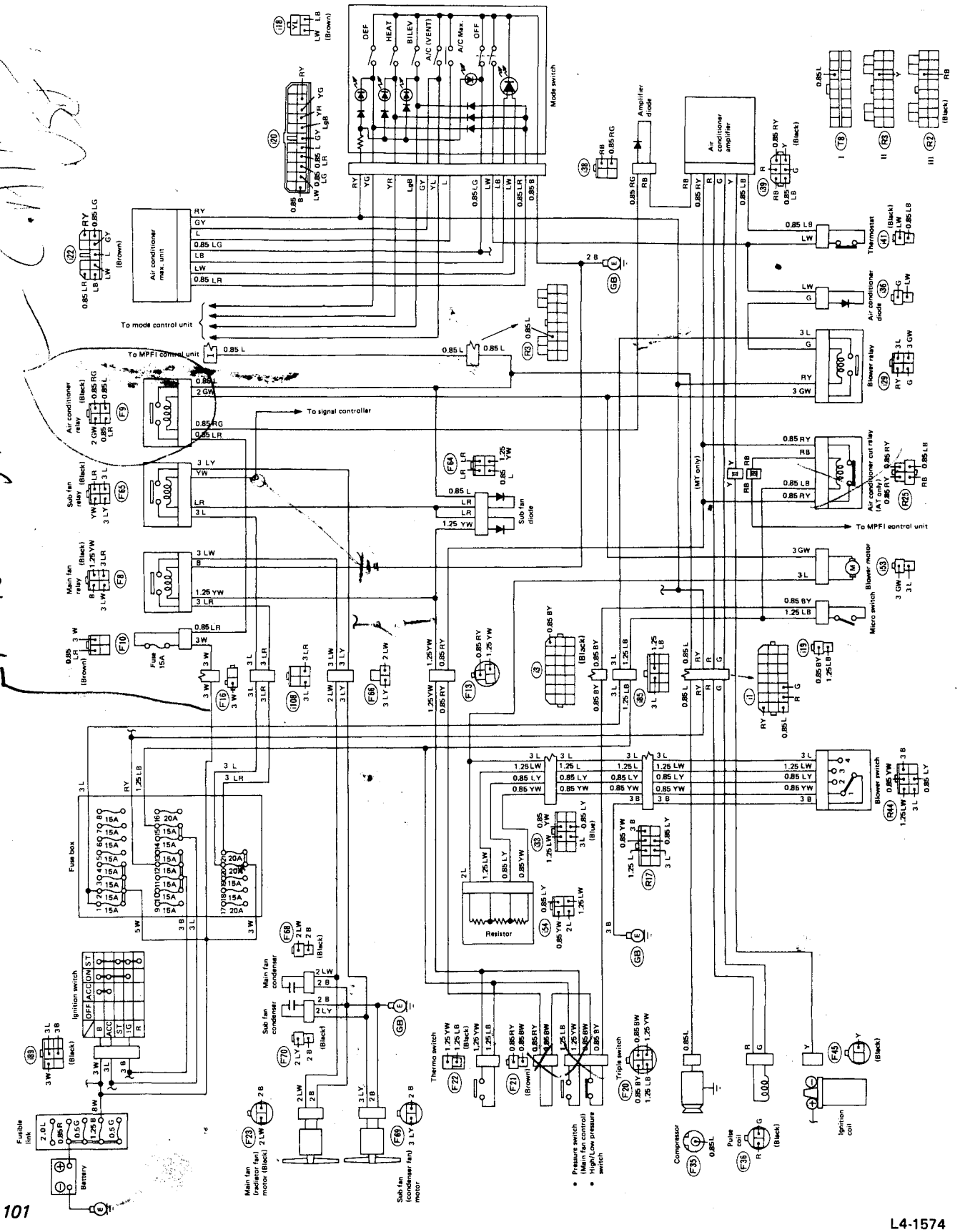

Fig. 101

L4-1574

SUBARU

1988

	Page
MECHANISM AND FUNCTION	2
Body Construction	2
Cross-sectional Structure of Body	3
Quietness	4
Body Sealing	5
Ventilation	9
Exterior	9
SERVICE DATA	10
Body Datum Points	10
COMPONENT PARTS	16
Body Construction	16
Front Hood and Hood Lock	17
Trunk Lid and Fuel Flap	18
Front Bumper	19
Rear Bumper	20
Body Parts	21
Cover and Molding	22
Sunroof	23
SERVICE PROCEDURE	24
Hood	24
Trunk Lid and Fuel Flap	25
Bumper	26
Body Parts	36
Outer Accessories	37
Cover and Molding	38

MECHANISM AND FUNCTION

Body Construction

The vehicle body is of monocoque construction built with high tensile strength steel sheets for light weight and rigidity. Corrosion preventive steel sheets are utilized where necessary to protect the body against corrosion.

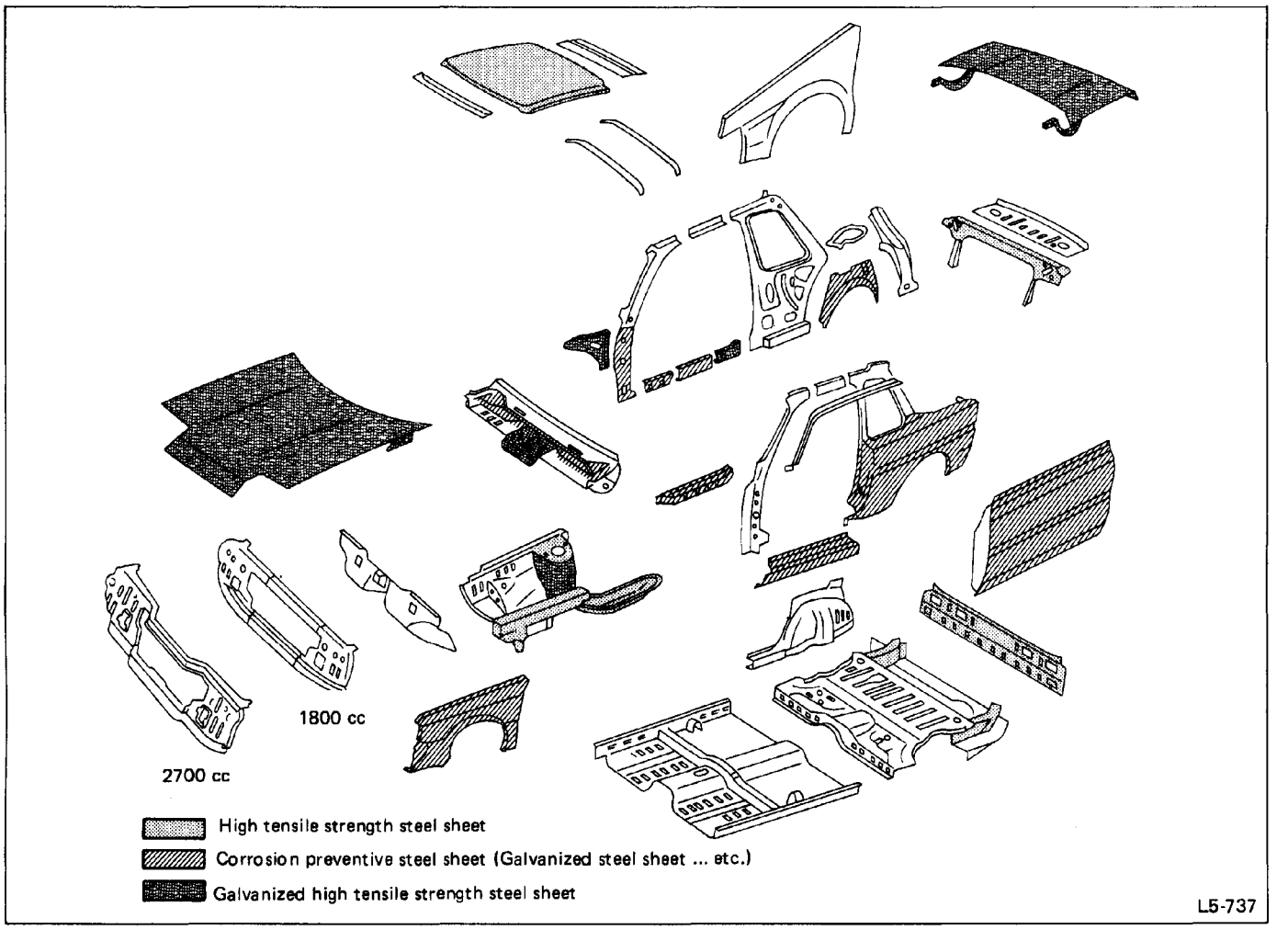

Fig. 1

Cross-sectional Structure of Body

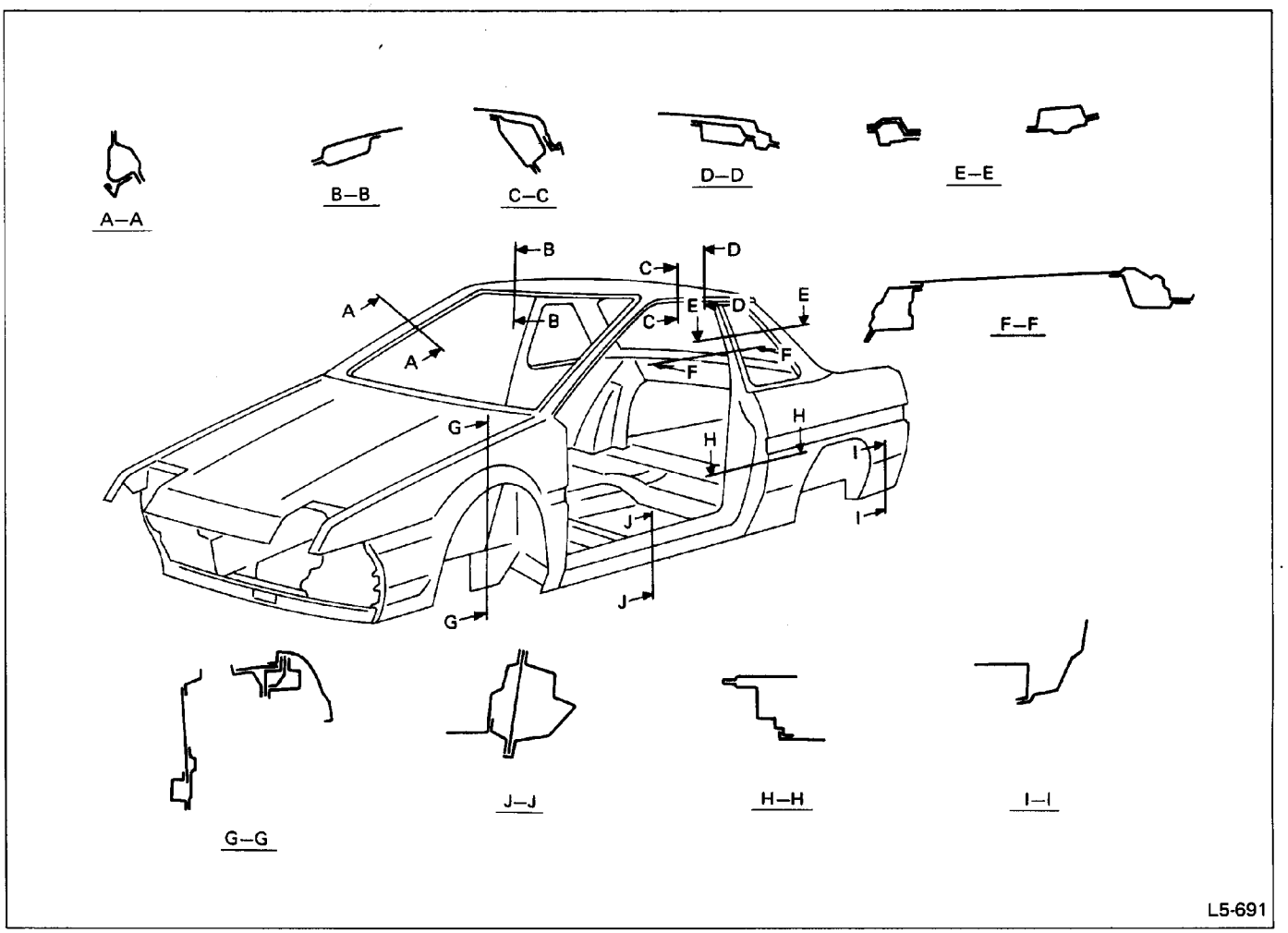

Fig. 2

Quietness

Silencers, dual-wall panels, sound-absorbing materials, etc. are utilized in conjunction with a high-rigidity and vibration/noise-proof body structure in order to provide a quiet passenger compartment.

1) Silencers

They (= asphalt sheets) minimize the transmission of noise/vibration into the passenger compartment.

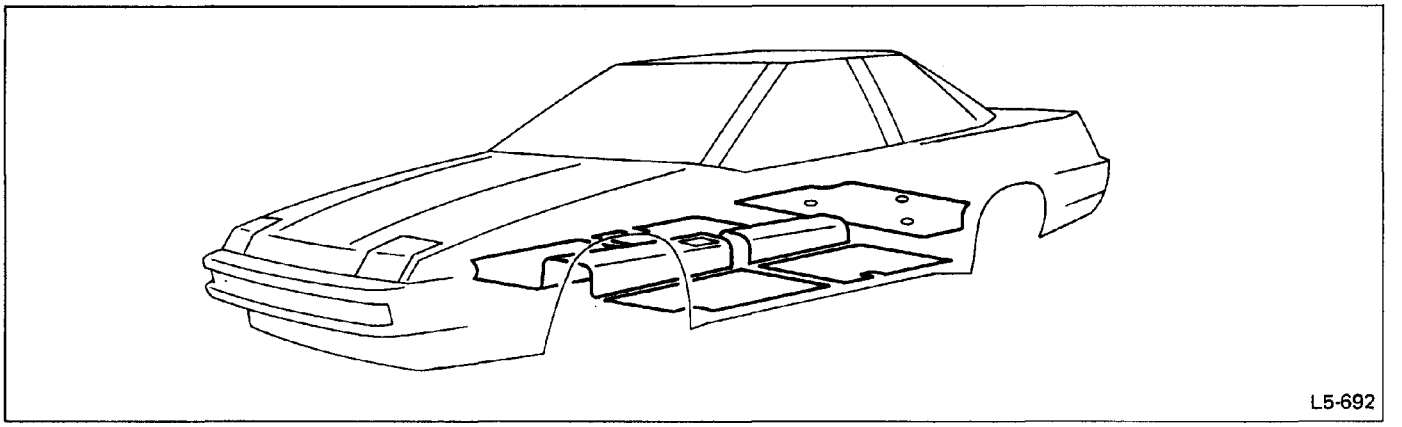

Fig. 3

2) Dual-wall toeboard

The toeboard is a dual-wall design consisting of an asphalt sheet placed between two steel panels to reduce the transmission of noise and vibration from the engine compartment to the passenger compartment.

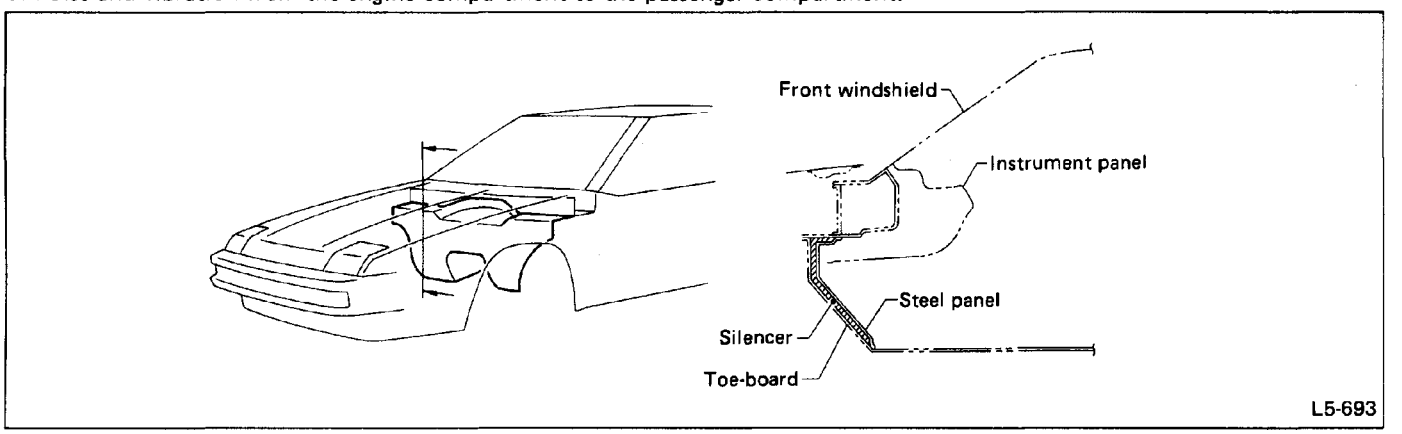

Fig. 4

3) Sound-absorbing materials

A unit construction type insulator is used respectively for the toeboard, floor, trunk, roof and rear bulkhead section to improve the sound-absorbing effect and even thicker sound-absorbing material is used in the floor for 2700 cc.

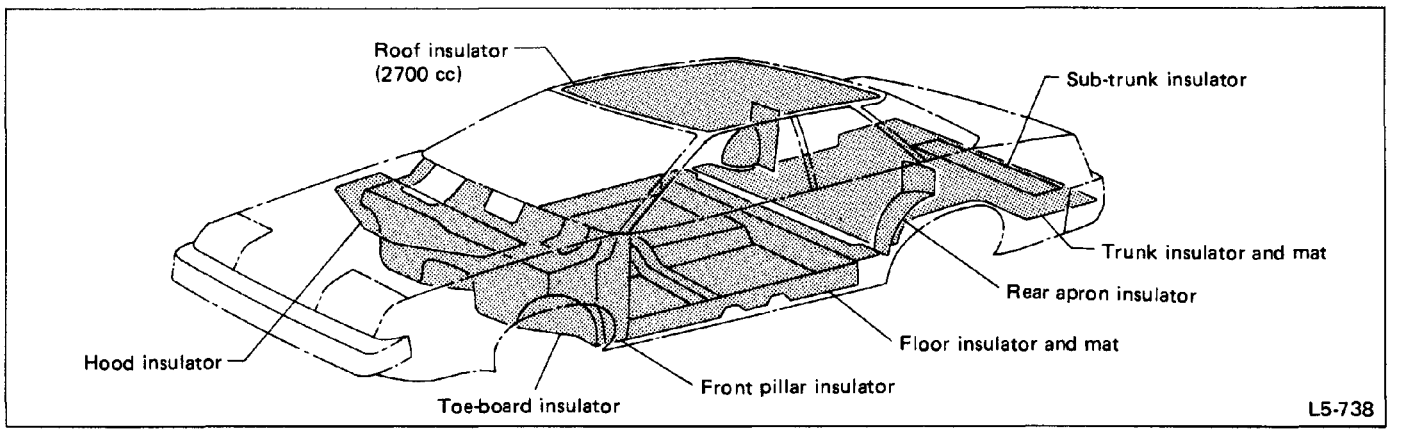

Fig. 5

Body Sealing

1) Sections sealed against entry of water/dust

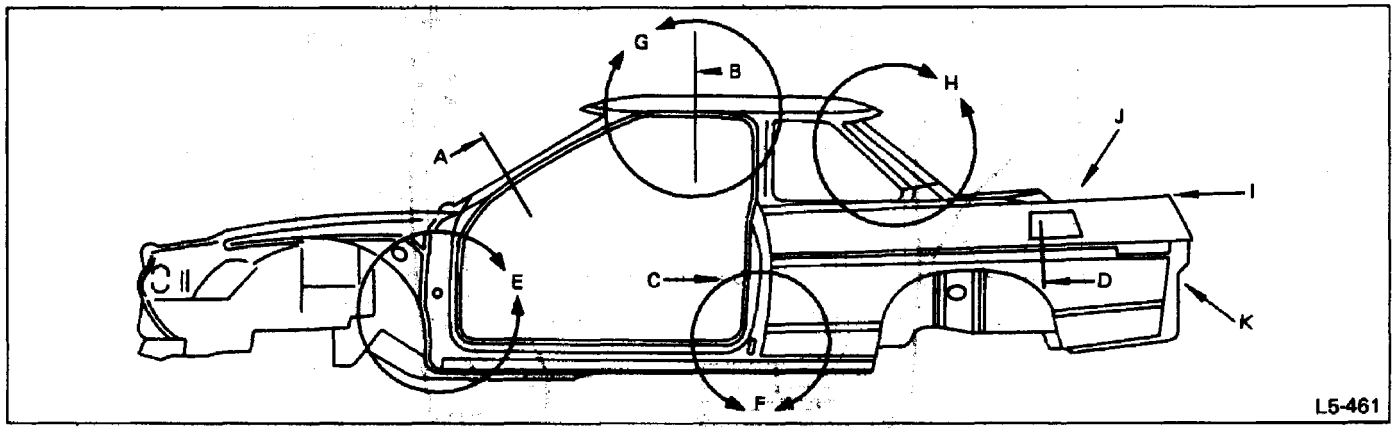

Fig. 6

(1) Detail (1) – Cross-sectional view of sealed sections

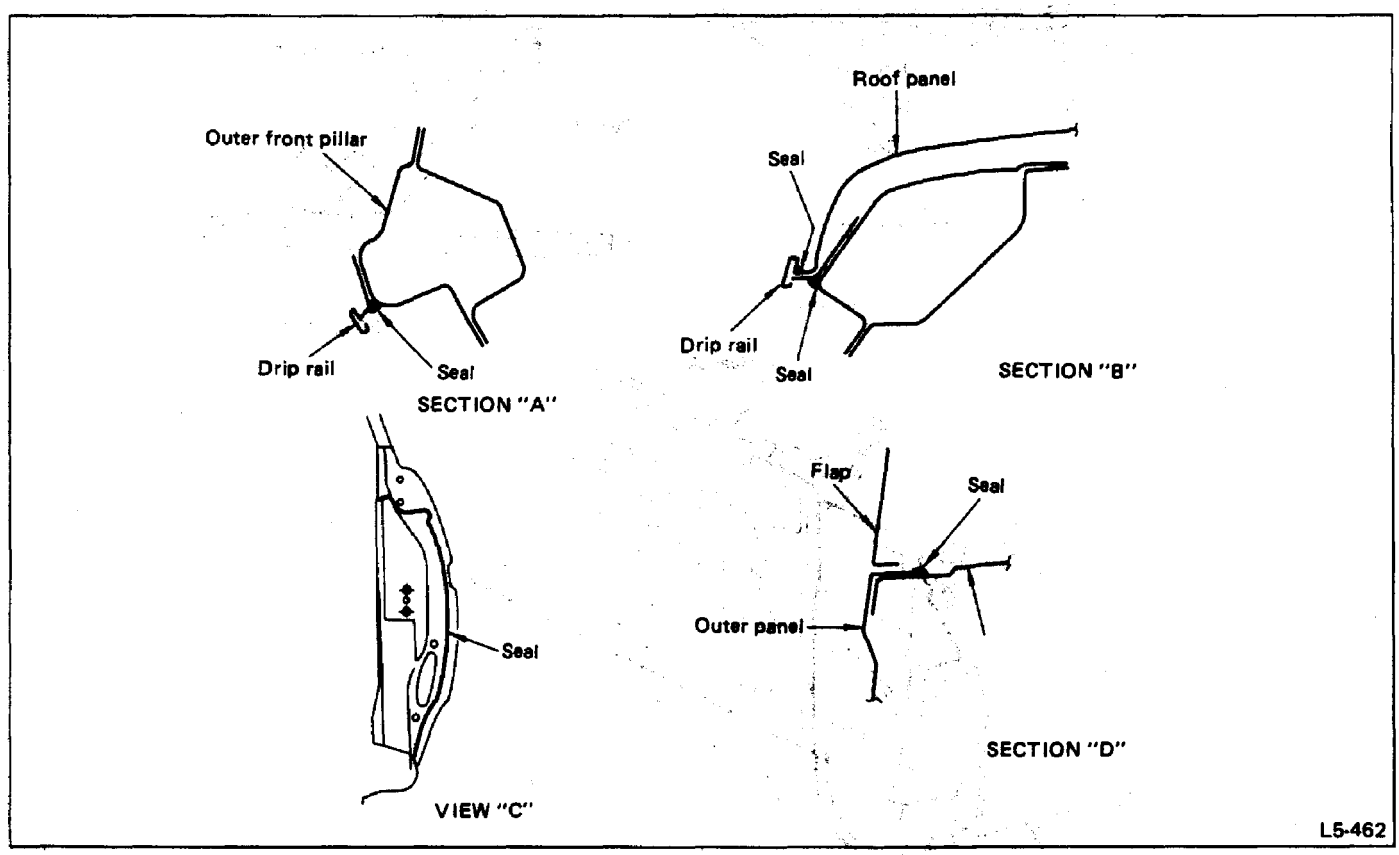

Fig. 7

(2) Detail (2) – Cross sectional views of sealed sections

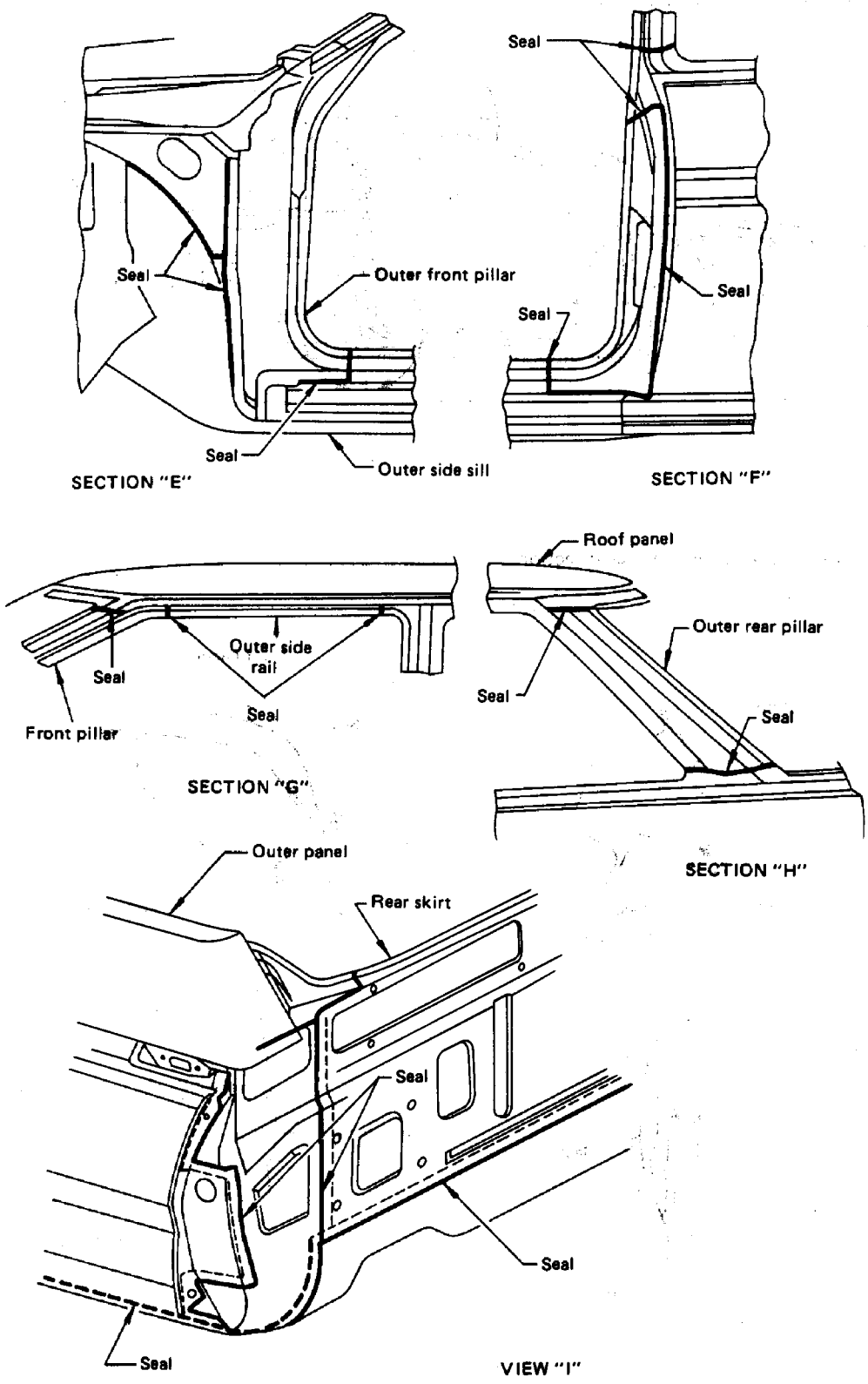

Fig. 8

L5-463

(3) Detail (3) – Cross sectional views of sealed sections

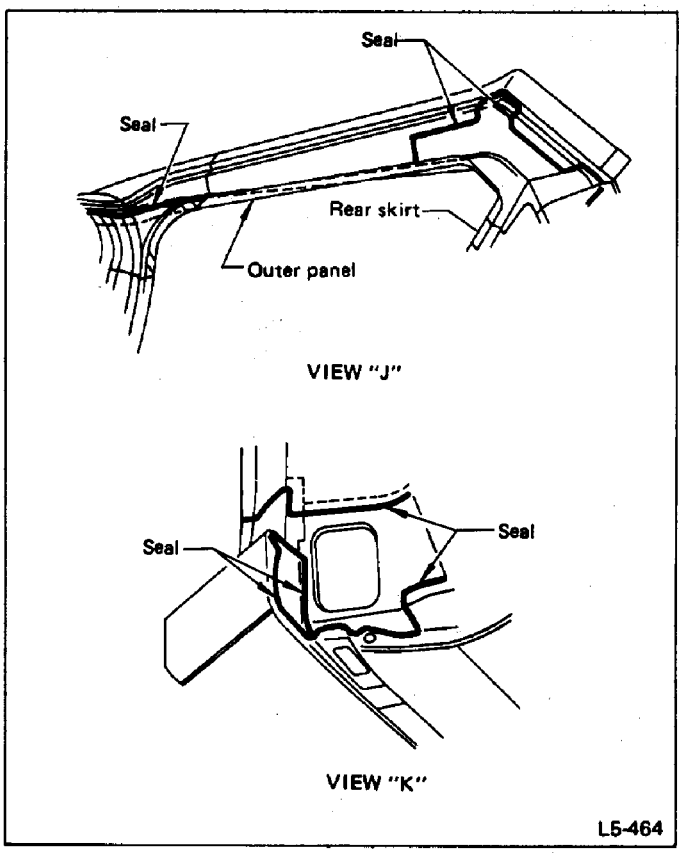

Fig. 9

(4) Detail (4) – Engine compartment

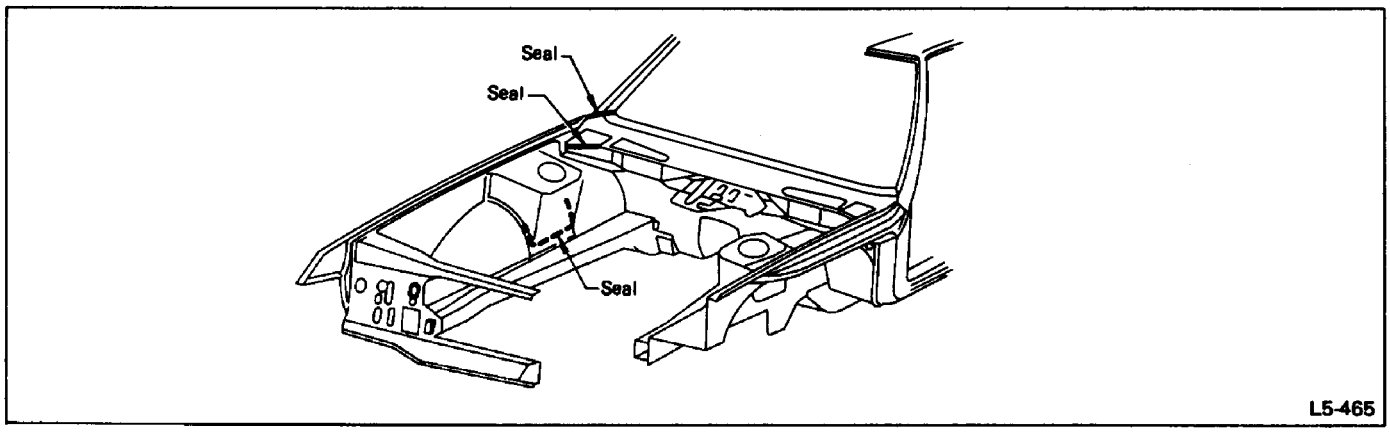

Fig. 10

2) Sealed parts

All gauge holes and other holes used during the body manufacturing process are plugged to prevent entry of water and dust. Anytime the vehicle body has been repaired, etc., the affected holes should be properly plugged with the use of the specified plugs as shown below.

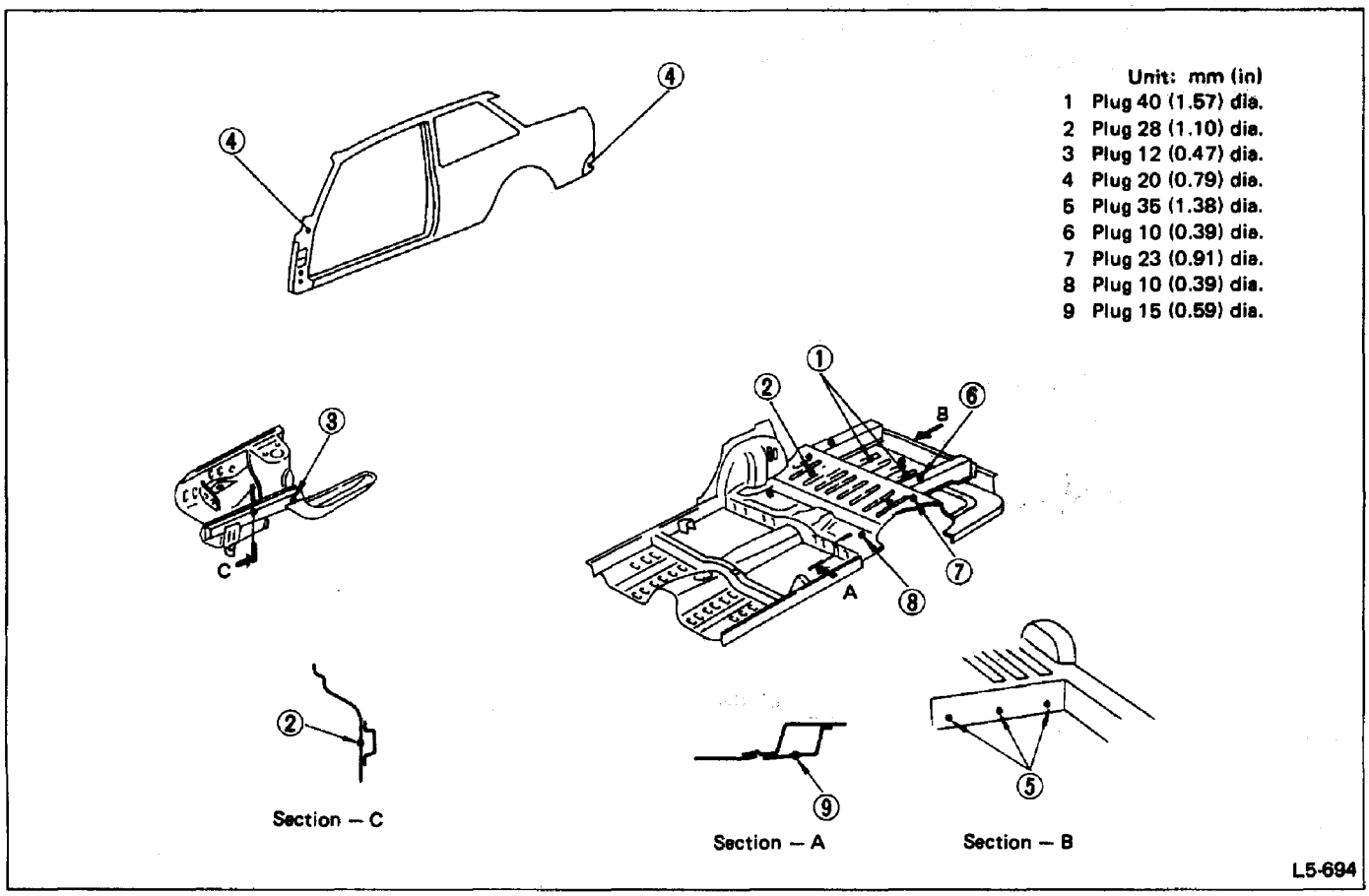

Fig. 11

Ventilation

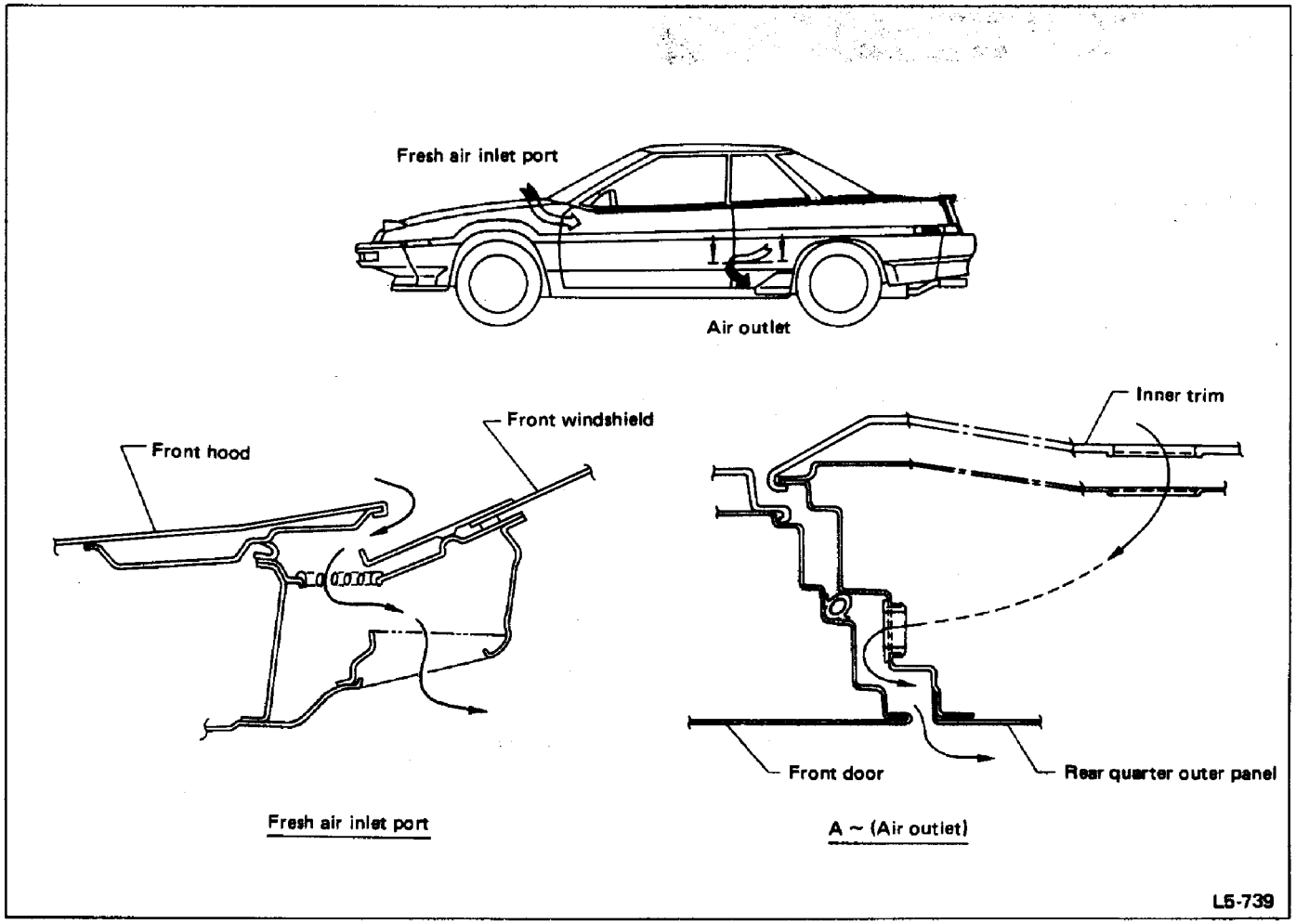

Fig. 12

Exterior

Bumper

The front and rear bumpers are basically composed of a back beam with a resin covering. Some of them are painted the same color as the car body.

Rearview Mirror

The rearview mirror is aerodynamically designed to reduce wind noise and resistance.

Fuel Flap Opener

The fuel flap opener, which can open fuel flap from the driver's compartment, is standard equipment on all models.

Aero-Parts

Aero-parts are installed on some models for improved aerodynamic performance during high-speed operation.

SERVICE DATA

BODY DATUM POINTS

CENTER STRUCTURE

- **Measuring point**

Measure dimensions with mounted parts removed.

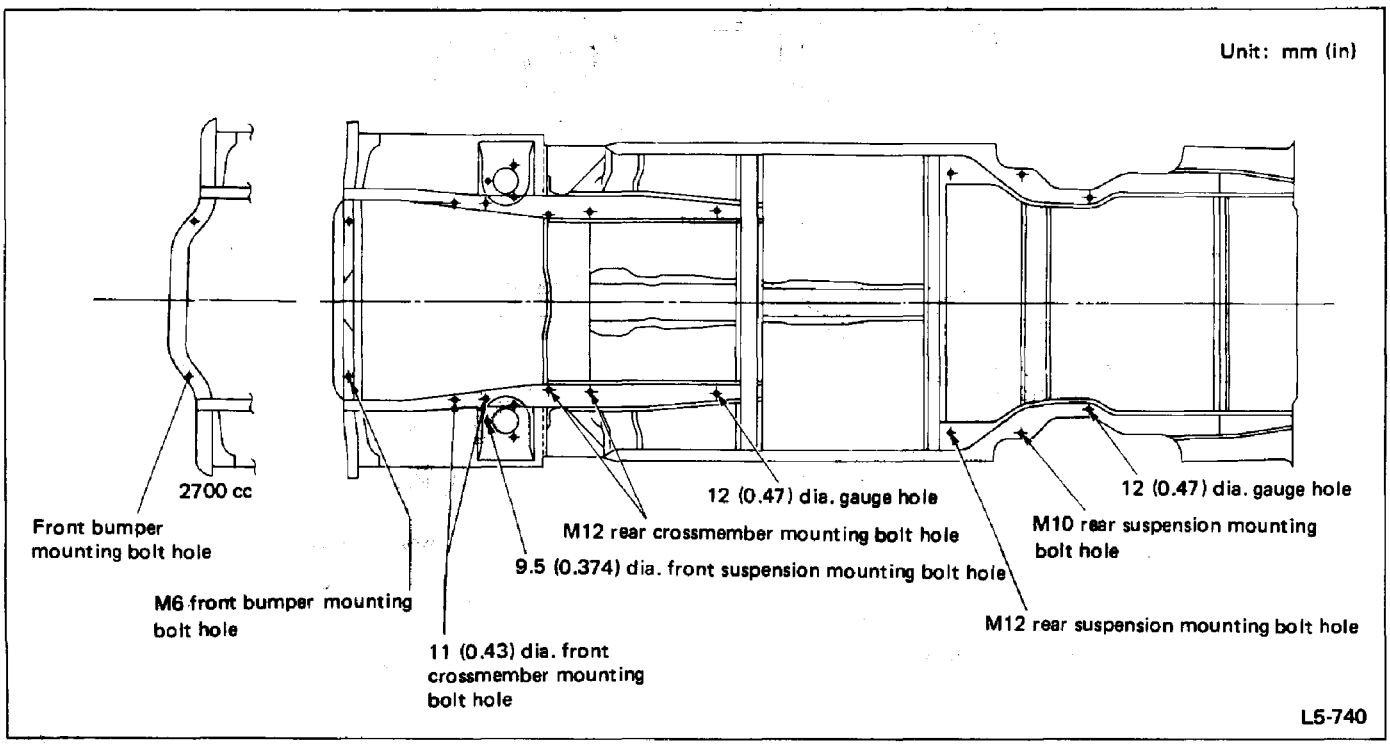

Fig. 13

- **Alignment – 1**

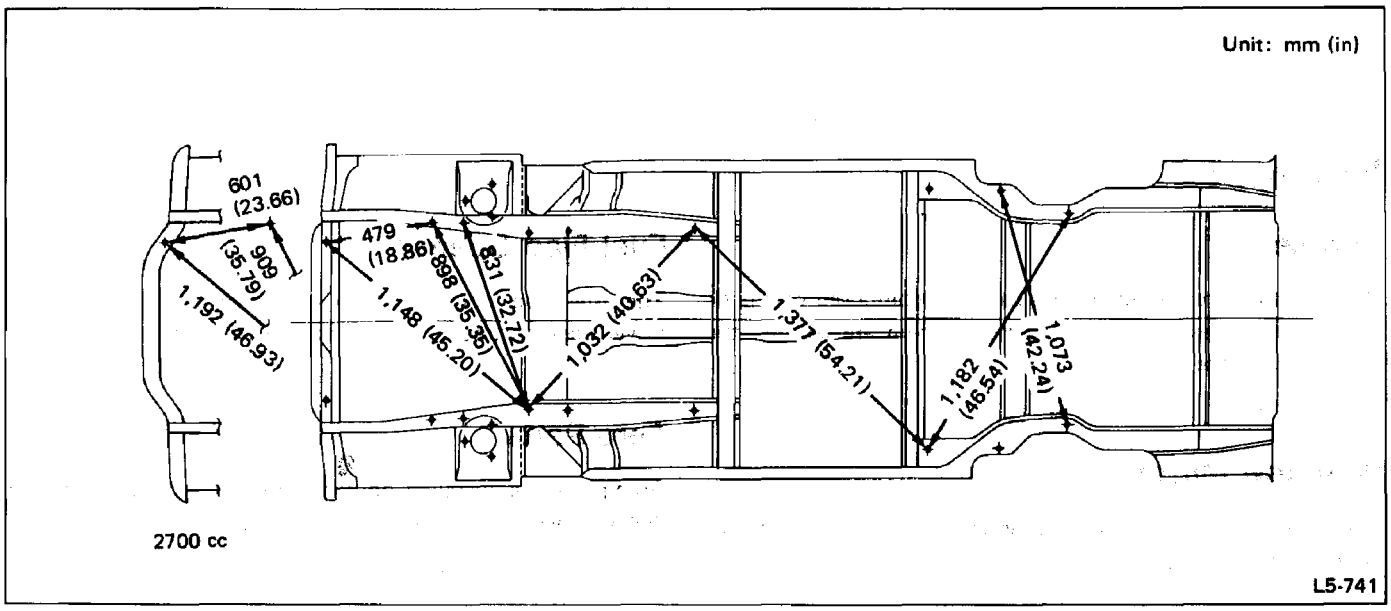

Fig. 14

- **Alignment – 2**

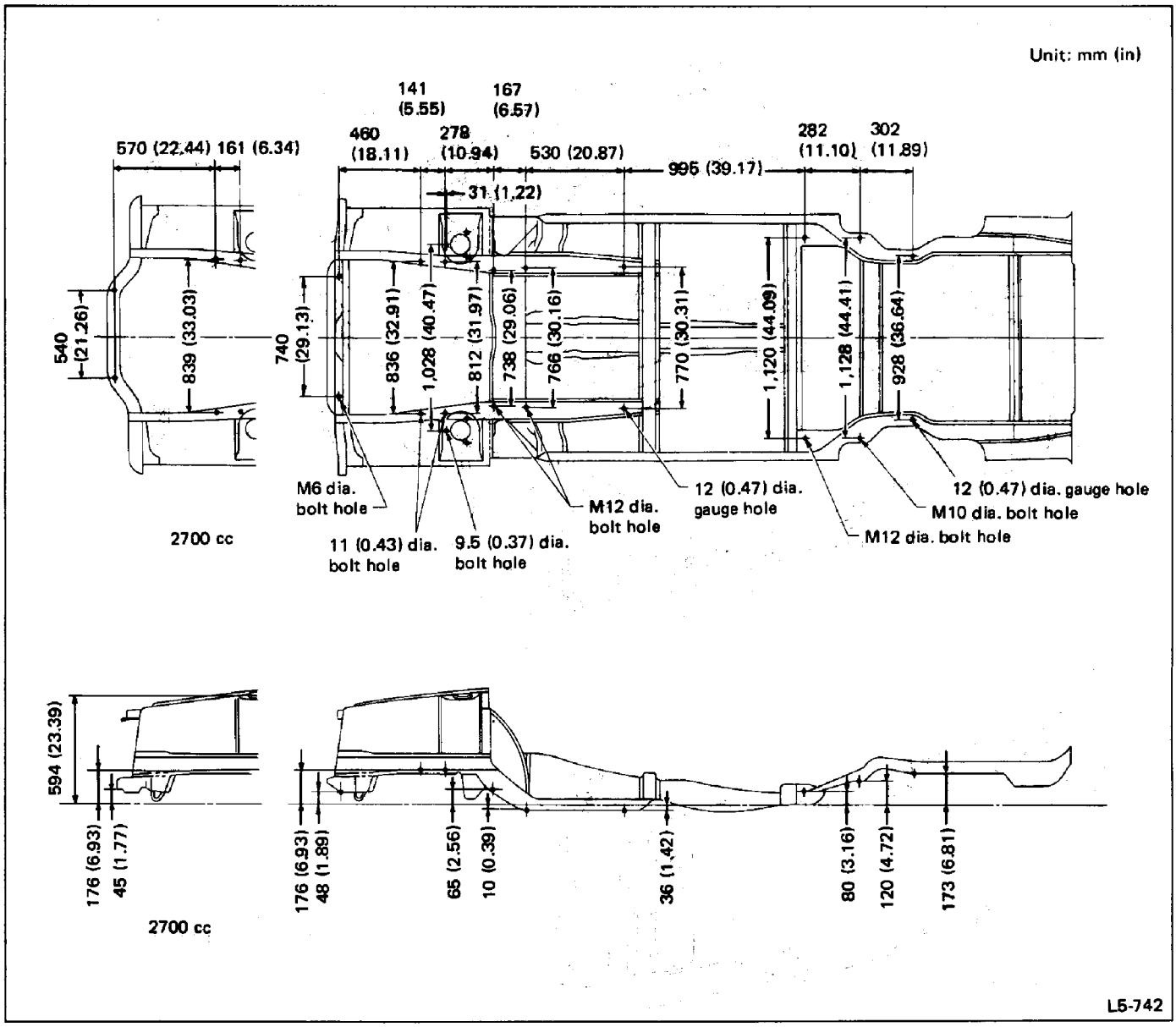

Fig. 15

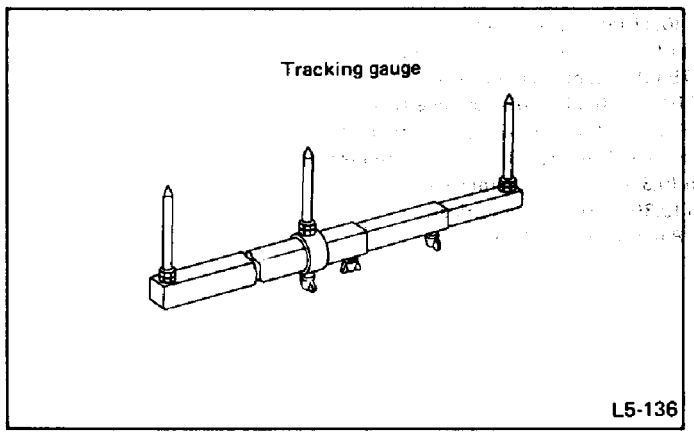

Fig. 16

a. All dimensions refer to the distance between the centers of holes when measured in a straight line.
b. Left and right dimensions are all symmetrical to each other.
c. Use a tram tracking gauge to measure all dimensions. If a measuring tape is used, be extremely careful because it tends to deflect or twist which results in a false reading.

FRONT STRUCTURE

- **Measuring points**

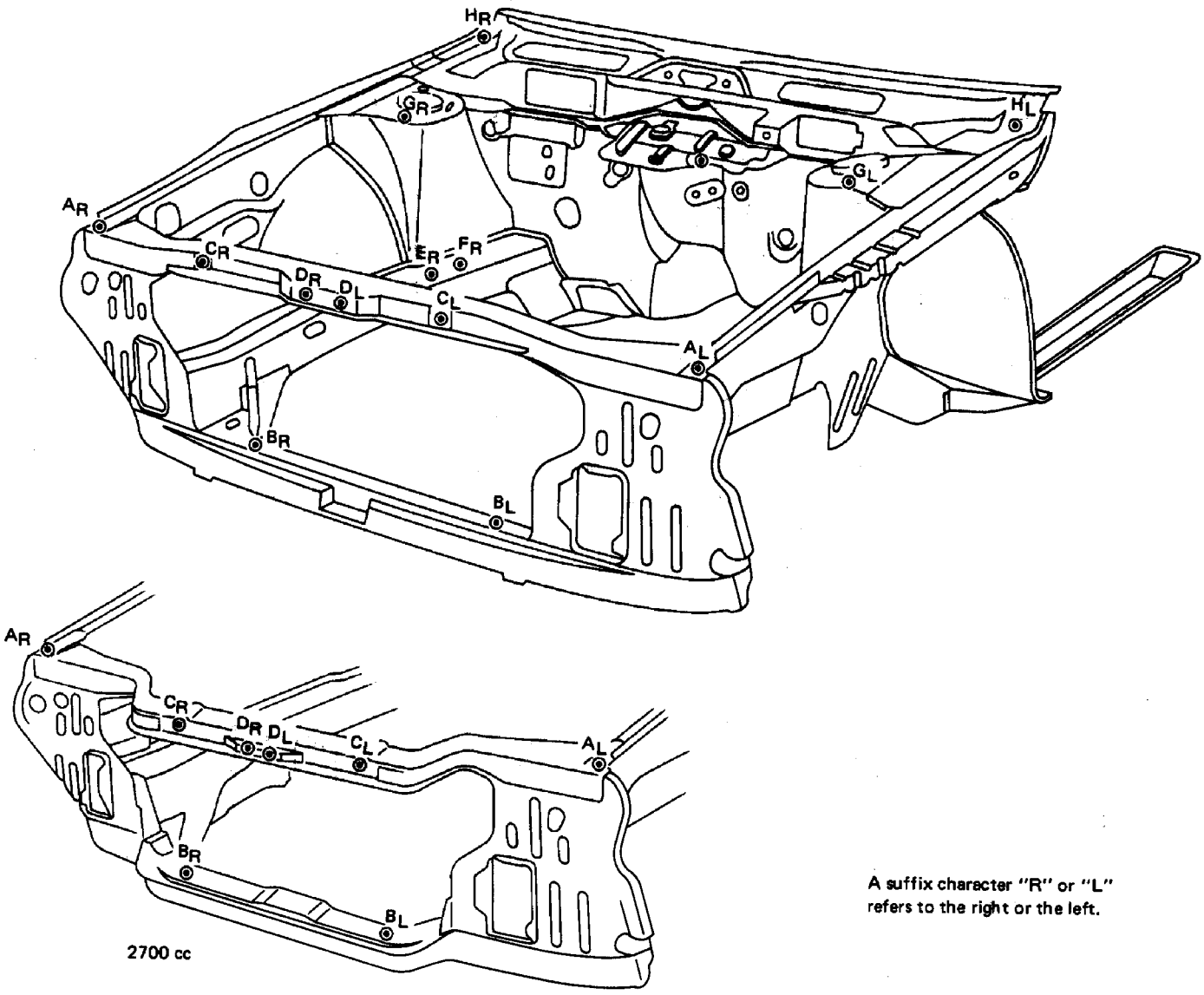

A suffix character "R" or "L" refers to the right or the left.

A_R, A_L – Fender mounting hole - Front [8 mm (0.31 in) dia., symmetrical]
B_R, B_L – Radiator mounting pin holes [16.4 mm (0.646 in) dia., not symmetrical]
C_R, C_L – Radiator mounting holes [19 mm (0.75 in) dia., not symmetrical]
D_R, D_L – Radiator panel stay mounting holes [10 mm (0.39 in) dia., symmetrical]
E_R, E_L – Front crossmember mounting holes - Front [11 mm (0.43 in) dia., symmetrical]
F_R, F_L – Front crossmember mounting holes - Rear [11 mm (0.43 in) dia., symmetrical]
G_R, G_L – Strut mount mounting holes [9.5 mm (0.374 in) dia., symmetrical]
H_R, H_L – Fender mounting hole - Rear [10 mm (0.39 in) dia., symmetrical]
I – Wiper motor mounting hole - Center [8 mm (0.31 in) dia.]

Fig. 17

L5-743

- **Datum dimensions**

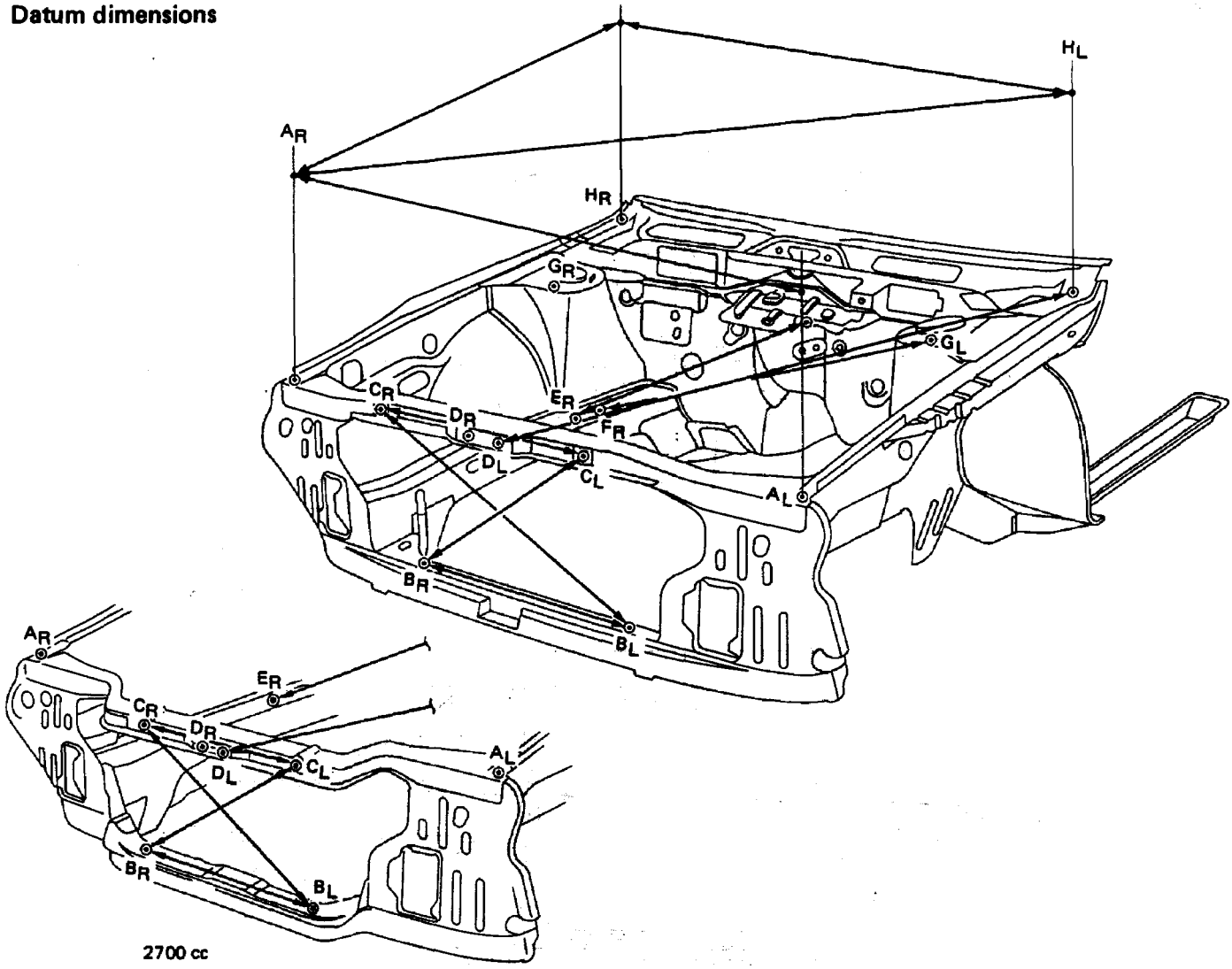

Unit: mm (in)

$A_R - H_R$ $A_L - H_L$	$A_R - A_L$	$H_R - H_L$	$A_R - H_L$ $A_L - H_R$	$B_R - B_L$	$C_R - C_L$	$B_R - C_L$ $B_L - C_R$
1,001 (39.41)	1,360 (53.54)	1,364 (53.70)	1,690 (66.54)	560 (22.05) 513* (20.20)	560 (22.05) 513* (20.20)	665 (26.18) 624* (24.57)

$D_R - H_R$ $D_L - H_L$	$F_R - G_L$ $F_L - G_R$	$G_R - G_L$	$E_R - I$	$E_L - I$	$G_R - I$	$G_L - I$
1,242 (48.90) 1,306* (51.42)	974 (38.35)	1,028 (40.47)	660 (25.98) 674* (26.54)	550 (21.65) 565* (22.24)	628 (24.72)	479 (18.86)

*2700 cc

All dimensions refer to the distance between the centers of holes measured in a straight line.

Fig. 18

L5-744

DOOR

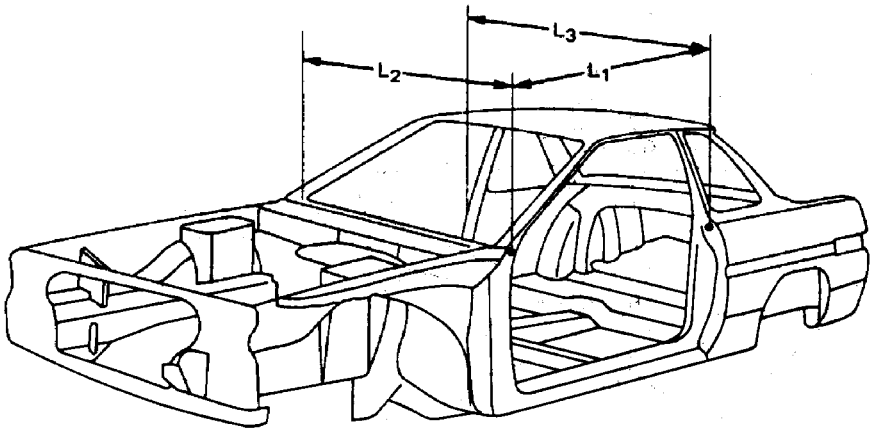

Unit: mm (in)

L_1	L_2	L_3
1,140.4 (44.90)	1,444.0 (56.85)	1,468.0 (57.80)

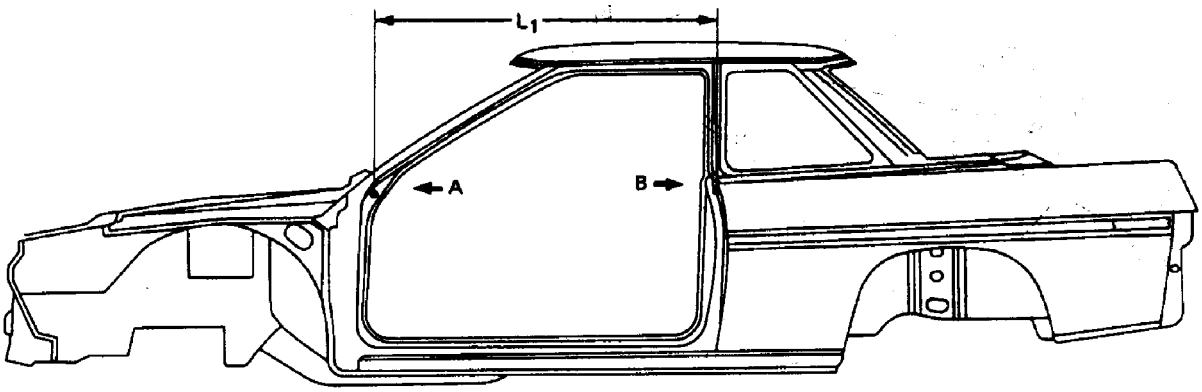

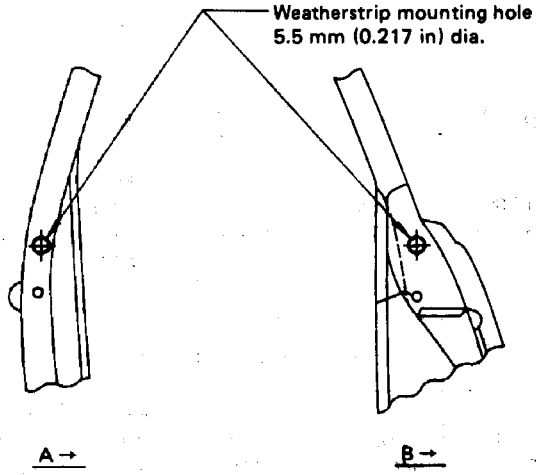

L5-302

Fig. 19

FRONT WINDSHIELD AND REAR WINDOW

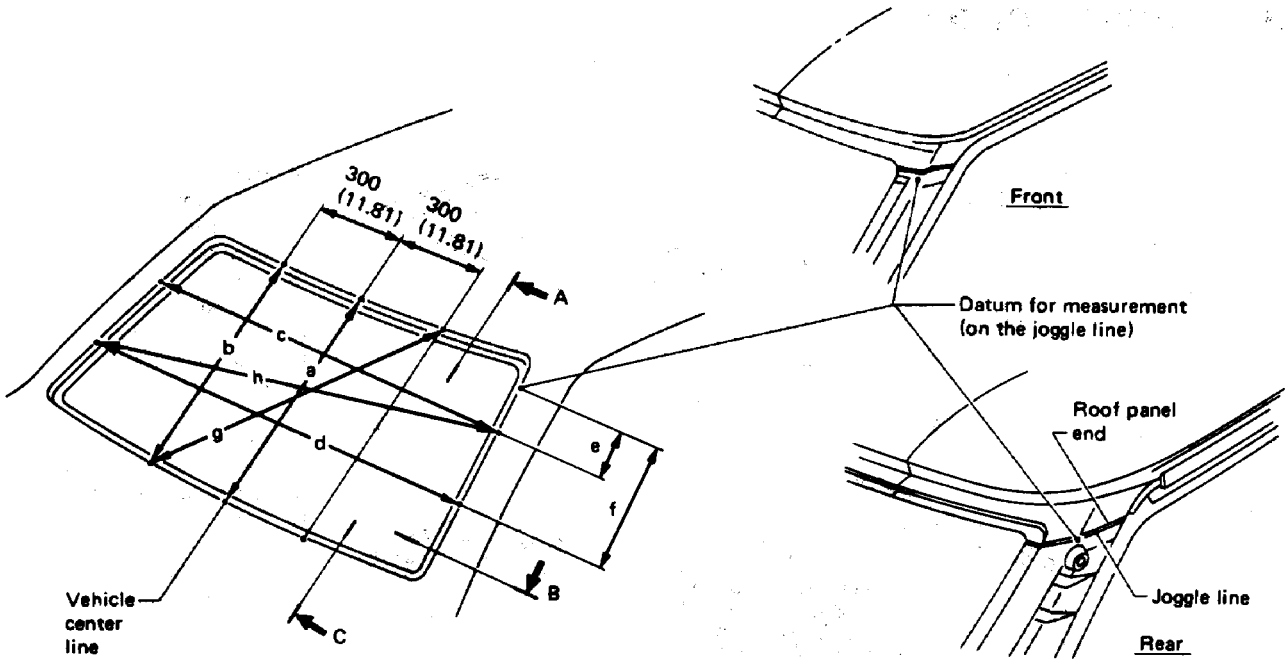

	Section A	Section B	Section C
Front	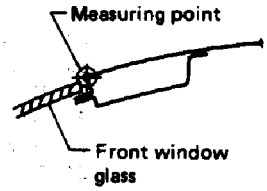	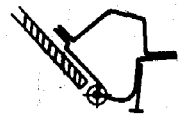	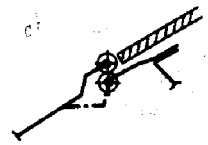
Rear	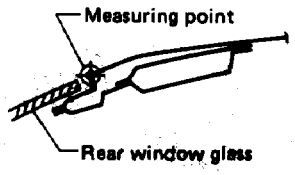		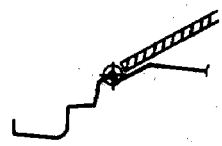

Unit: mm (in)

	Front	Rear
a	784.5 (30.89)	697.1 (27.44)
b	777.1 (30.59)	696.5 (27.42)
c	1,180.6 (46.48)	1,186.4 (46.71)
d	1,395.2 (54.93)	1,377.0 (54.21)
e	73.8 (2.91)	138.4 (5.45)
f	548.4 (21.59)	453.0 (17.83)
g	981.8 (38.65)	919.3 (36.19)
h	1,368.4 (53.87)	1,316.3 (51.82)

L5-303

Fig. 20

COMPONENT PARTS

Body Construction

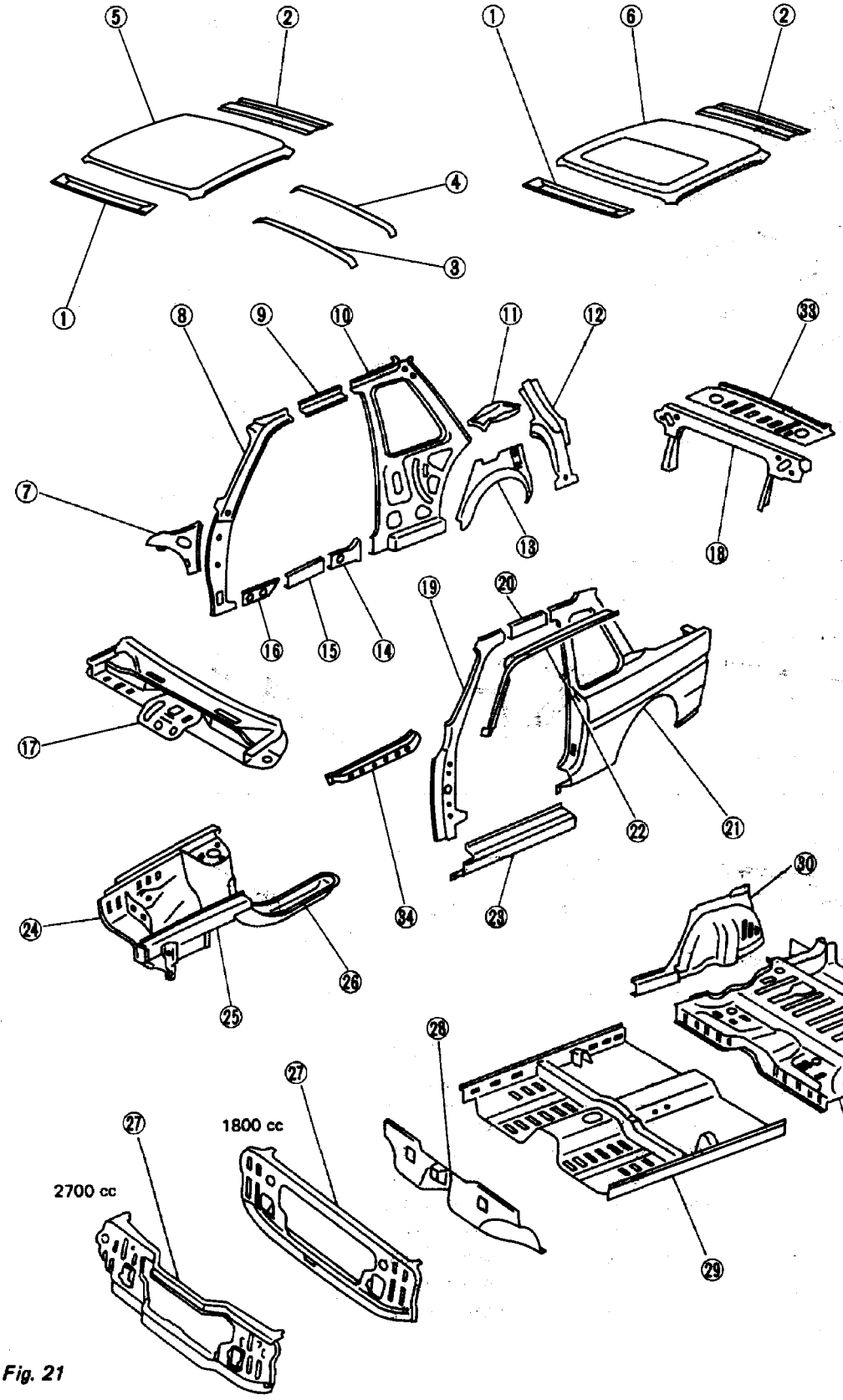

1 Front rail CP
2 Rear rail CP
3 Front brace
4 Rear brace
5 Roof panel
6 Roof panel (Sunroof)
7 Cowl side panel
8 Front pillar (inner)
9 Side rail (inner)
10 Rear quarter (inner)
11 Rear panel gusset
12 Reinforcement (Rear pillar)
13 Rear arch (inner)
14 Reinforcement (Side sill rear)
15 Reinforcement (Side sill center)
16 Reinforcement (Side sill front)
17 Front bulk head
18 Rear bulk CP
19 Front pillar (outer)
20 Side rail (outer)
21 Rear quarter (outer)
22 Roof drip rail
23 Side sill (outer)
24 Wheel apron ASSY
25 Front side frame
26 Rear side frame
27 Radiator panel
28 Toe board
29 Front floor
30 Rear wheel apron ASSY
31 Rear floor
32 Rear skirt
33 Rear panel ASSY
34 Frame side (upper)

Fig. 21

L5-745

Front Hood and Hood Lock

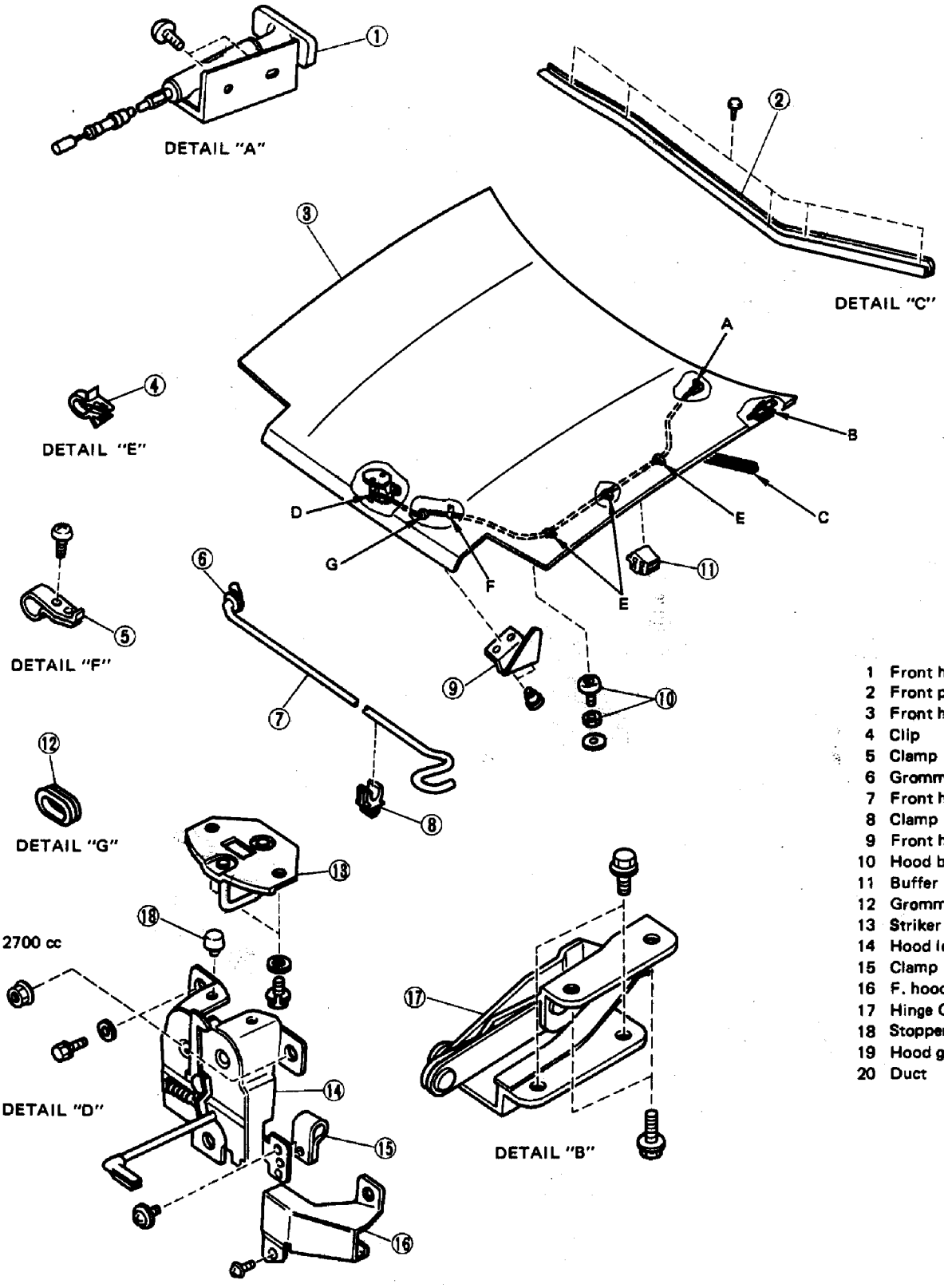

1 Front hood cable ASSY
2 Front panel seal
3 Front hood CP
4 Clip
5 Clamp
6 Grommet
7 Front hood stay
8 Clamp
9 Front hood cover
10 Hood buffer ASSY
11 Buffer
12 Grommet
13 Striker ASSY
14 Hood lock ASSY
15 Clamp
16 F. hood cover cable
17 Hinge CP
18 Stopper hood
19 Hood grille ASSY
20 Duct

Fig. 22

L5-746

Trunk Lid and Fuel Flap

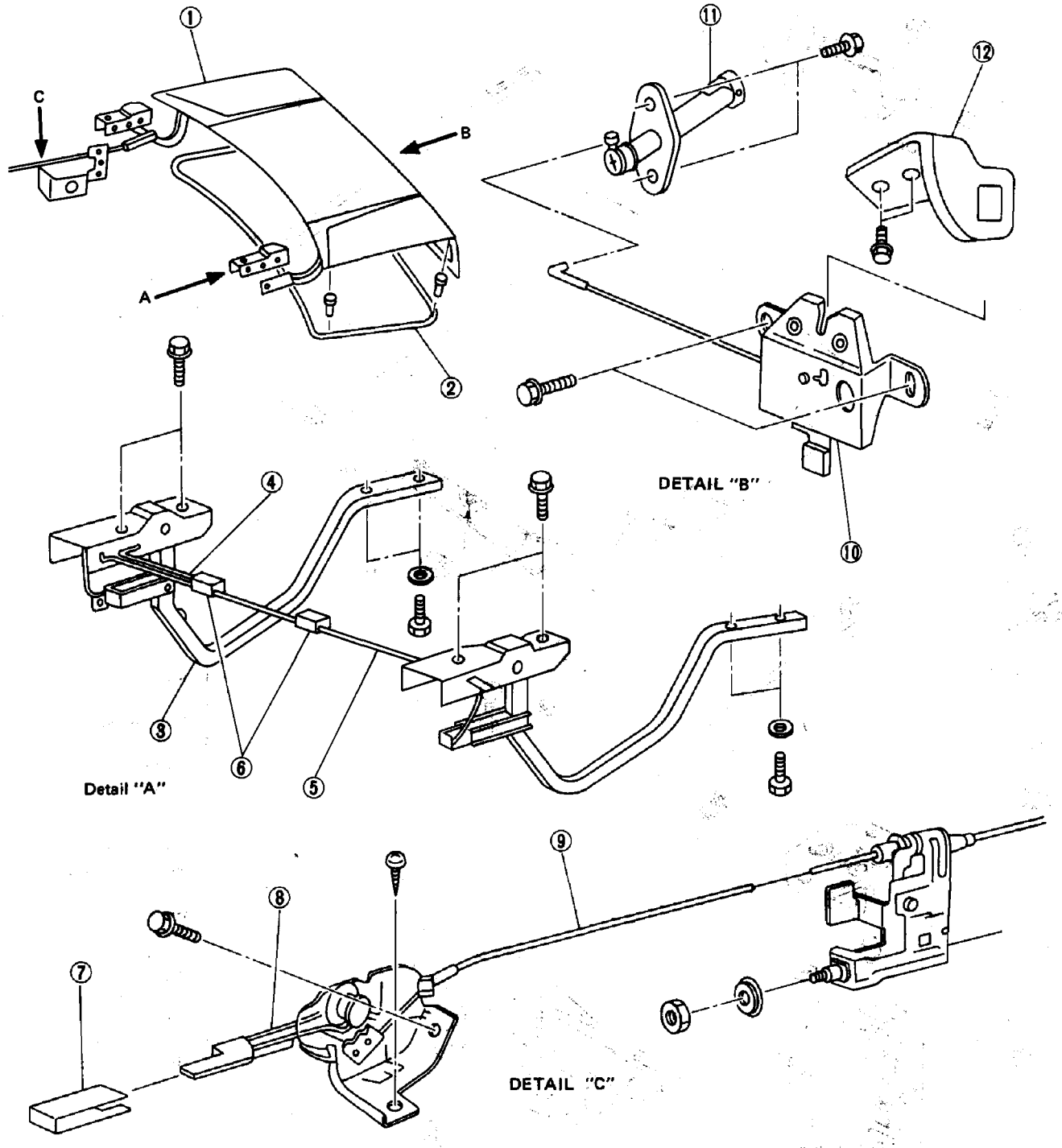

1	Trunk lid CP	7	Knob
2	Weather strip	8	Pull handle
3	Hinge	9	Cable ASSY
4	Torsion bar	10	Lock ASSY
5	Torsion bar	11	Key lock ASSY
6	Stopper	12	Striker

L5-747

Fig. 23

Front Bumper

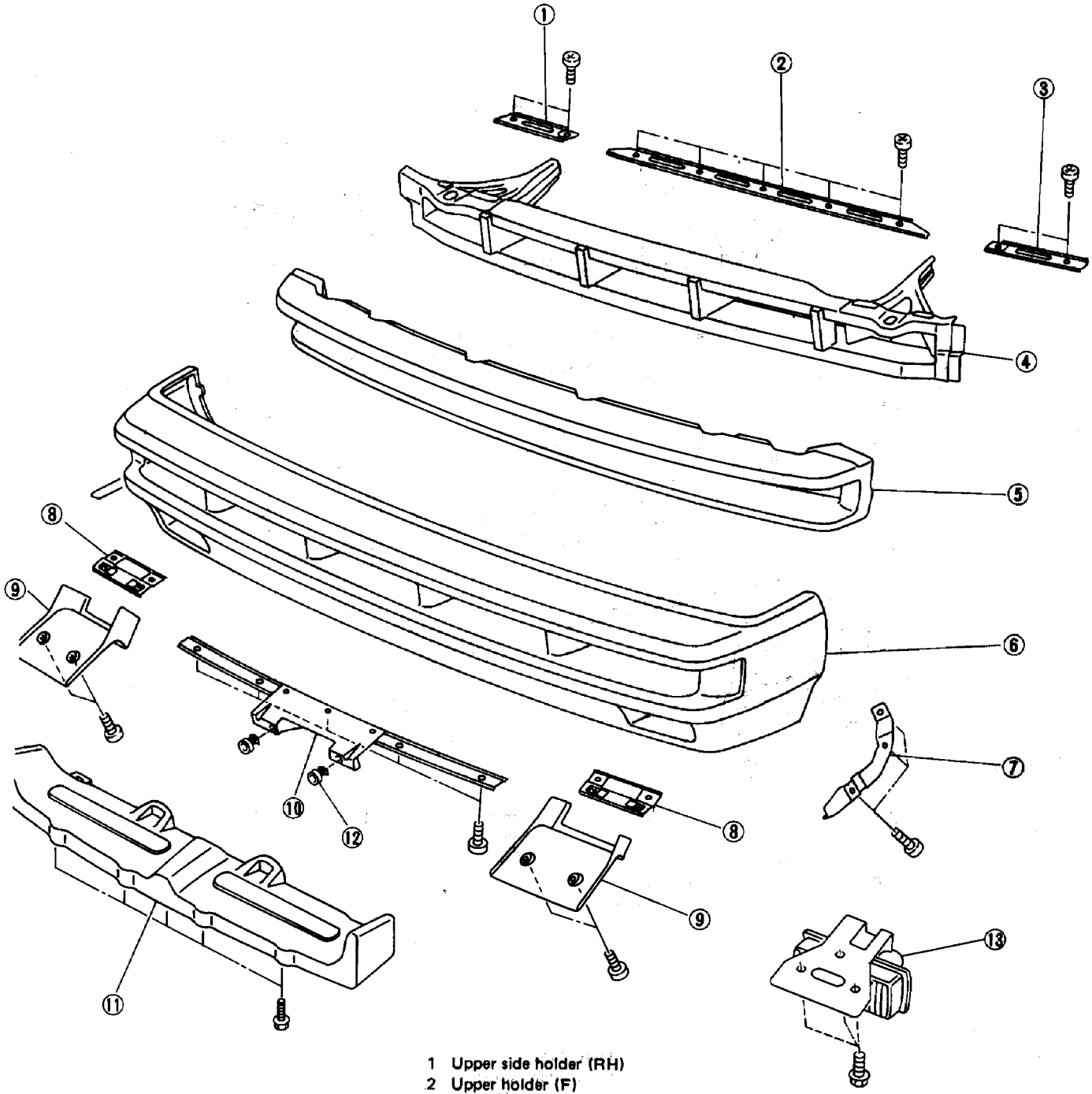

1 Upper side holder (RH)
2 Upper holder (F)
3 Upper side holder (LH)
4 Beam ASSY (F)
5 E/A foam (F)
6 Bumper face (F)
7 Side bracket
8 Cover bracket (fog) (1800 cc)
9 Cover (fog lamp) (1800 cc)
10 Lower holder (F)
11 Lower duct (F) (1800 cc)
12 Screw grommet
13 Fog lamp CP (2700 cc)

L5-748

Fig. 24

Rear Bumper

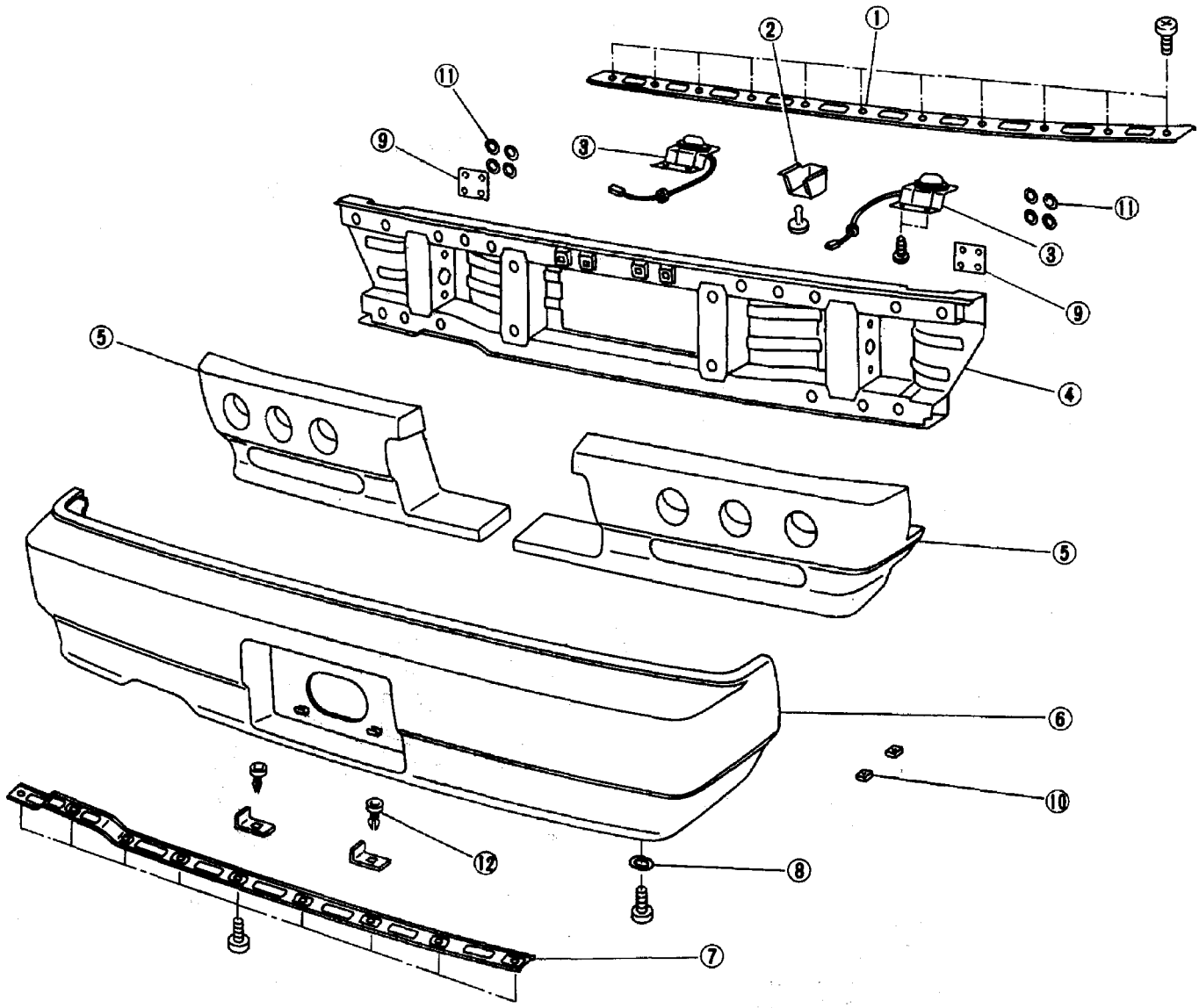

1 Holder (upper)
2 Rear bumper supporter
3 License light ASSY
4 Beam CP$_1$
5 E/A foam (R)
6 Bumper face (R)
7 Lower holder A
8 Lower holder B
9 Spacer stay
10 Rear bumper ASSY nut
11 Washer
12 Screw grommet

L5-749

Fig. 25

Body Parts

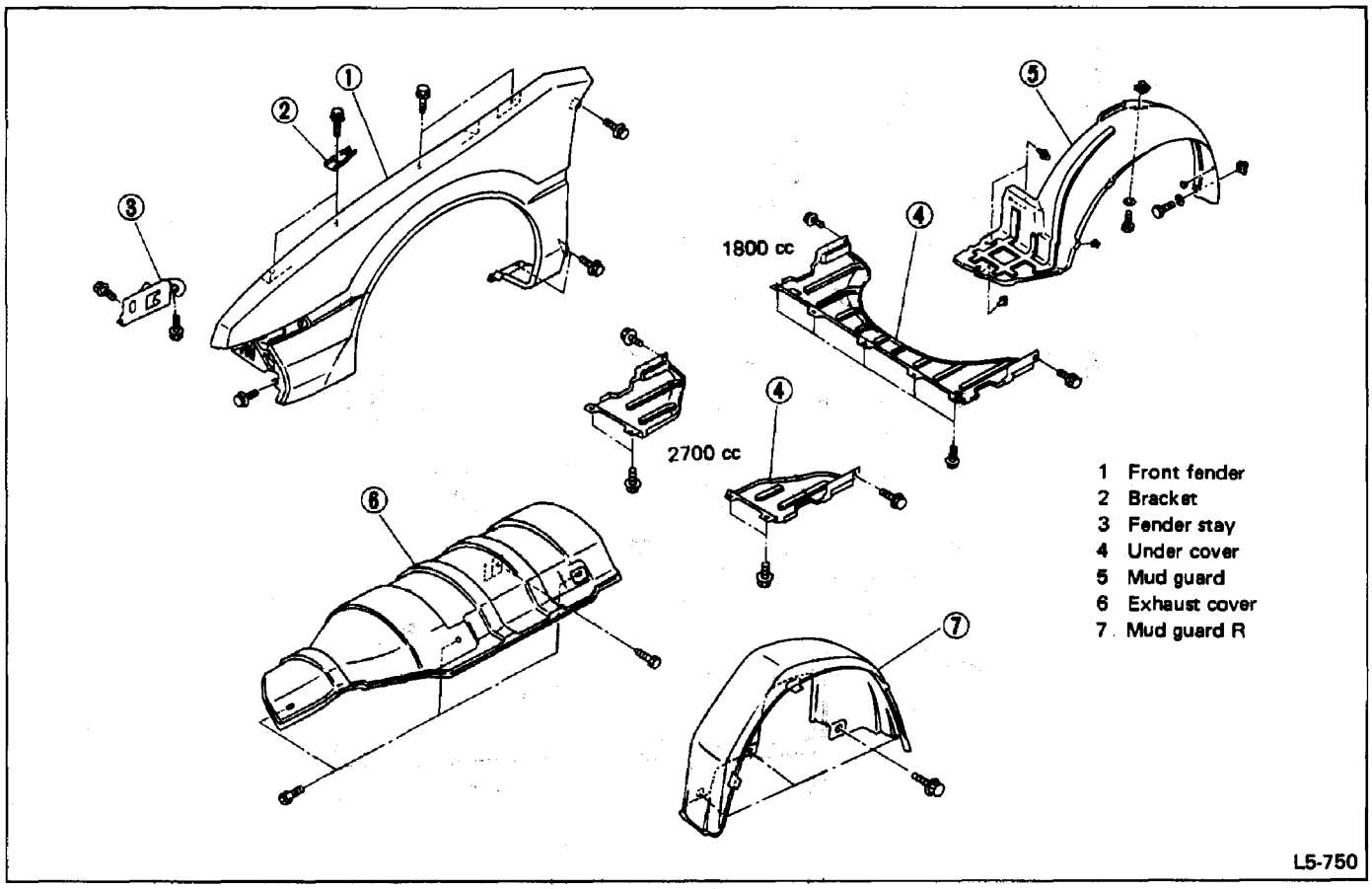

Fig. 26

Cover and Molding

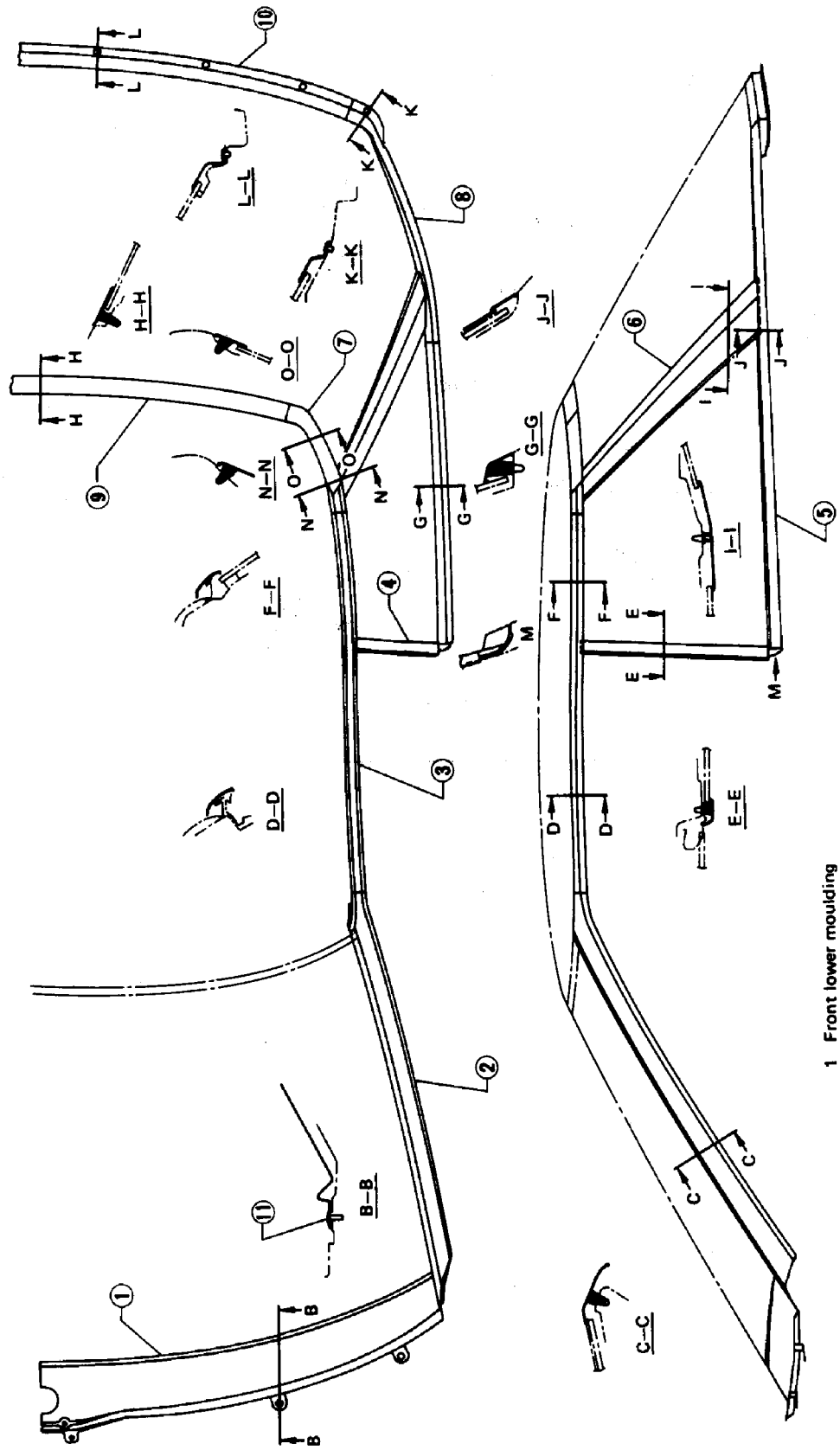

Fig. 27

SERVICE PROCEDURE

Hood

Hood Lock

The hood lock has a dual locking design which consists of a main lock and a safety lock mechanism. When the release knob located at the front pillar on the driver's side is pulled back, the main lock is released through the cable attached to the knob. When the hood lock must be opened, lift the lever protruding to the front to release the safety lock.

REMOVAL

1) Open hood and remove striker ASSY.
2) Remove cable cover.

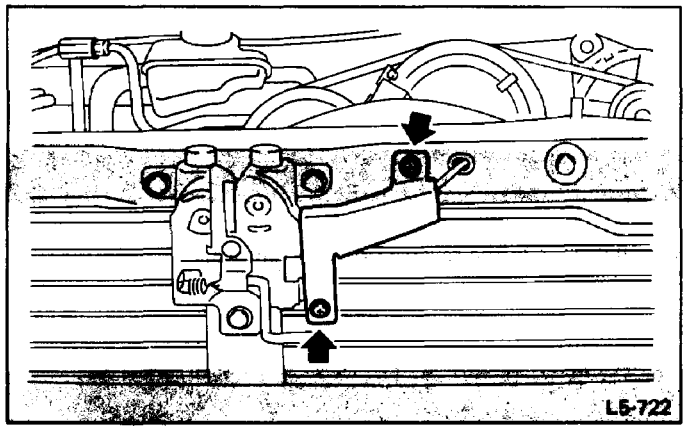

Fig. 28

3) Remove lock ASSY and disconnect cable.

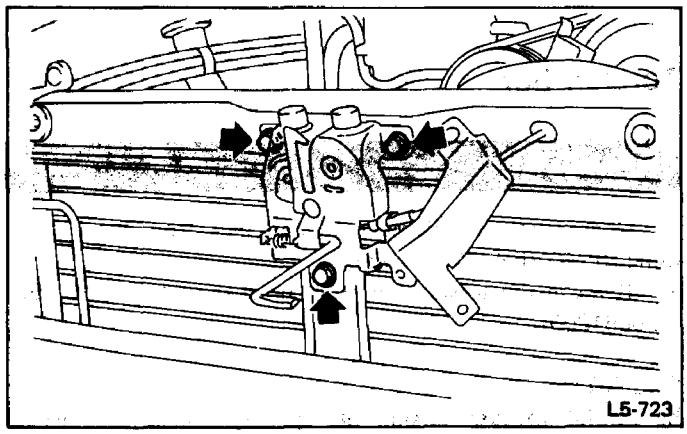

Fig. 29

INSTALLATION

Installation is in the reverse order of removal.

a. Align the center of striker with lock during installation. Make sure safety lever is properly caught by striker under the hood's own weight.
b. Route hood lock release cable and hold with clamps.
c. Adjust height of buffer on each side so that height of hood is aligned with fender.

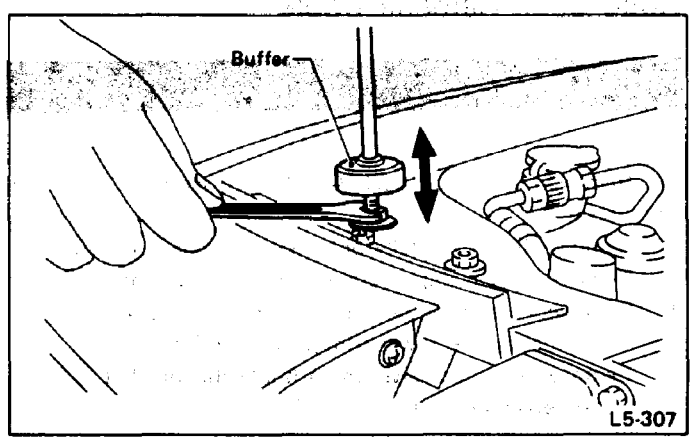

Fig. 30

ADJUSTMENT

1) Fore-aft and left-right adjustments
Loosen striker mounting bolts and adjust fore-and-aft position of striker.

Do not adjust striker position using the lock. Doing so may result in a misaligned front grille.

2) Up-down adjustment
Make up-and-down adjustment of lock only when hood does not properly contact buffer or hood is not flush with fender, or when release cable does not properly operate. Adjustment can be made by adjusting the position of lock ASSY.

POINTS TO CHECK

1) Springs for breakage.
2) Clinched section of safety lever for rust formation and balky movement of safety lever due to improper staking.
3) Other levers and spring for rust formation and unsmooth movement.

Hood Lock Release Cable

REMOVAL

1) Remove clamp from lock ASSY and disconnect cable end from lever.
2) Remove clips from radiator panel and cable from clips.
3) Remove cable clamps from engine compartment.
4) Remove lower trim panel from instrument panel. Refer to the "Instrument panel lower trim panel" section.
5) Remove tapping screws which hold cable bracket to front pillar, and detach bracket.

Trunk Lid and Fuel Flap

Trunk Lid

REMOVAL

Open trunk lid. Remove trunk lid mounting bolts and detach trunk lid from hinges.

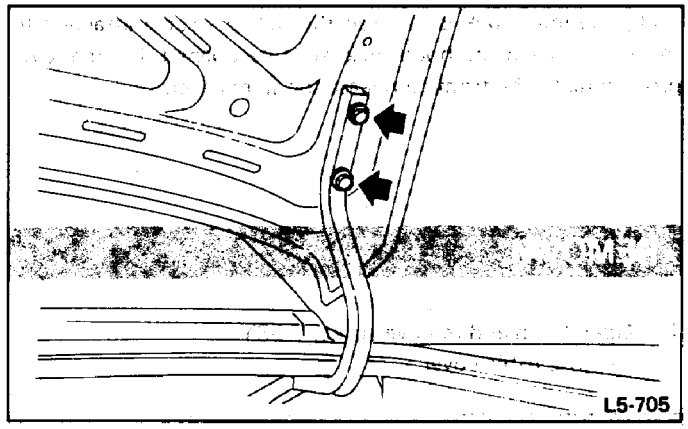

Fig. 31

INSTALLATION

Installation is in the reverse order of removal.

ADJUSTMENT

1) To adjust left-right lid positioning, loosen bolts which hold trunk lid to hinges.
2) To adjust up-down lid alignment, place washer(s) between trunk lid and hinges or move trunk lock ASSY up or down.

Torsion Bar

REMOVAL

1) Open trunk lid. Remove torsion bars from hinge links using REMOVER (926661000).
2) Remove the torsion bar from bracket using REMOVER (926661000).

CAUTION:
Be careful because torsion bar quickly swings back when released.

3) Remove the left and right torsion bars.

CAUTION:
Be careful because trunk lid drops under its own weight when torsion bars are removed.

INSTALLATION

1) Installation is in the reverse order of removal.
2) Apply a coat of grease to the rotary section of hinges and contact surfaces of torsion bars.

a. When installing hinge link to the end of torsion bar, move trunk lid in the "close" direction so that jig can be easily disengaged from torsion bar. Do not move trunk lid in that direction if hinge link is hard to install. Otherwise, torsion bar may suddenly disengage.
b. After installing new torsion bar, check that trunk lid opens and closes smoothly.

Trunk Lid Lock Assembly and Key Cylinder

REMOVAL

1) Remove rod of lock ASSY from rod holder of key lock ASSY.
2) Disconnect trunk opener cable by removing the screw from the rear skirt section.
3) Remove bolts which hold lock ASSY and remove lock ASSY.

a. Always remove rear skirt trim panel beforehand, if so equipped.
b. Be careful not to bend opener cable.

4) Remove drain connector from key cylinder.
5) Remove clip and detach key cylinder from rear skirt.

Always remove rear garnish beforehand, if so equipped.

INSTALLATION

Installation is in the reverse order of removal.

Bumper

Front Bumper

REMOVAL

1) Position vehicle on a lift.
2) Set headlights to upper beam.
3) Remove battery.
4) Raise vehicle.
5) Remove mud guards.

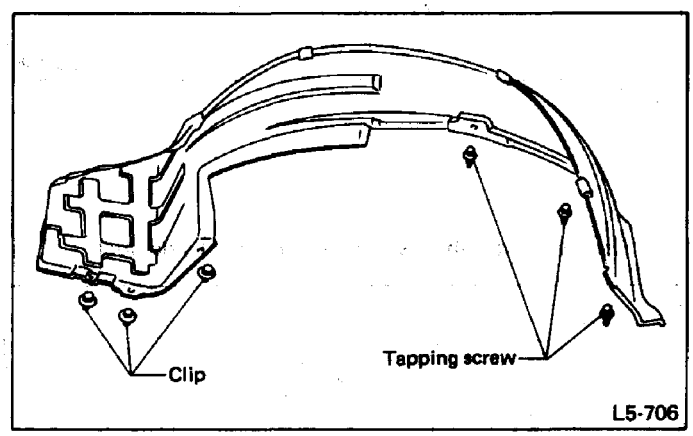

Fig. 32

6) Remove undercover and air dam skirt.

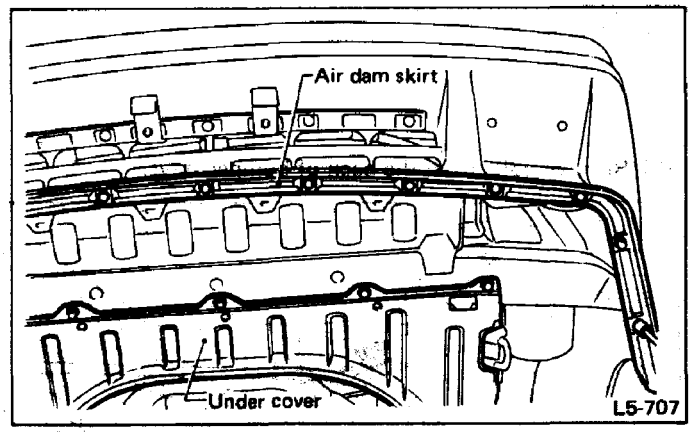

Fig. 33

7) Remove bolts which secure lower duct.
8) Remove bolts which secure side bumpers.

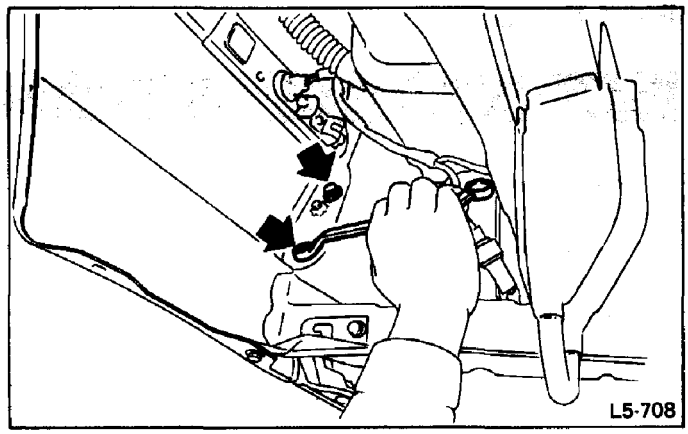

Fig. 34

9) Remove bolts which secure lower side of side duct.

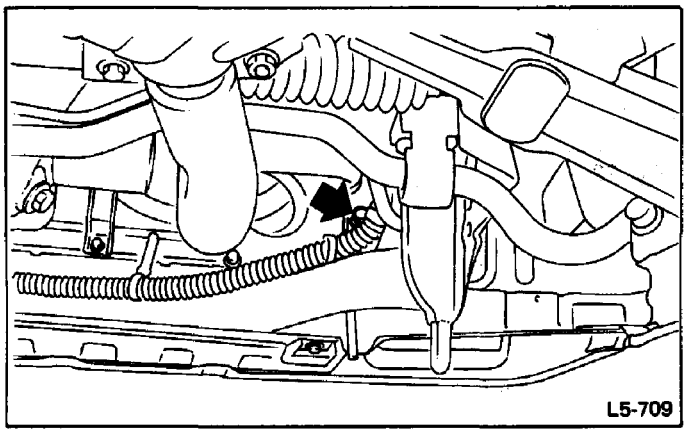

Fig. 35

10) Remove bolts from the back of bumper stays.

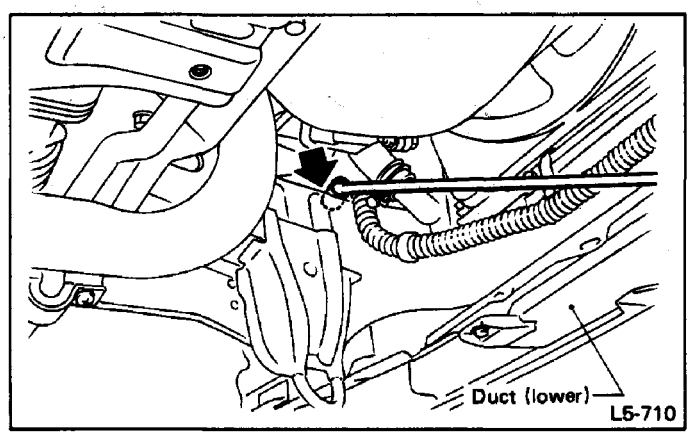

Fig. 36

11) Lower vehicle.
12) Remove washer tank.
(1) Disconnect hose from check valve on the back of front bumper.
(2) Remove bolts and washers which hold air cleaner.
(3) Remove clamp from boot (B) ASSY.
(4) Remove air cleaner and then remove conical nuts which hold washer tank.

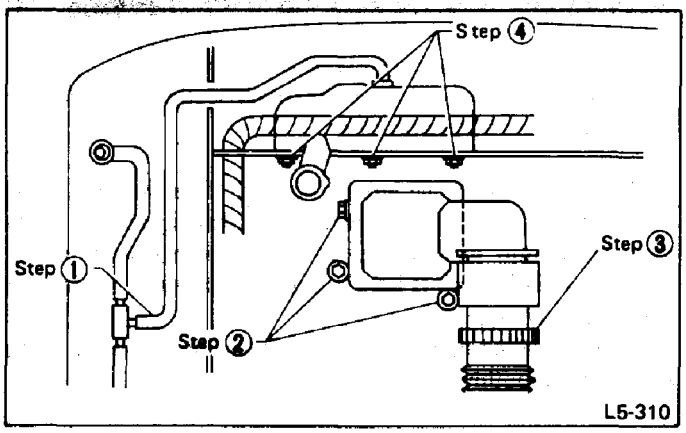

Fig. 37

Be sure to turn steering wheel completely to the left before removing washer tank.

13) Remove bolts which secure upper side of side duct, and remove side duct.

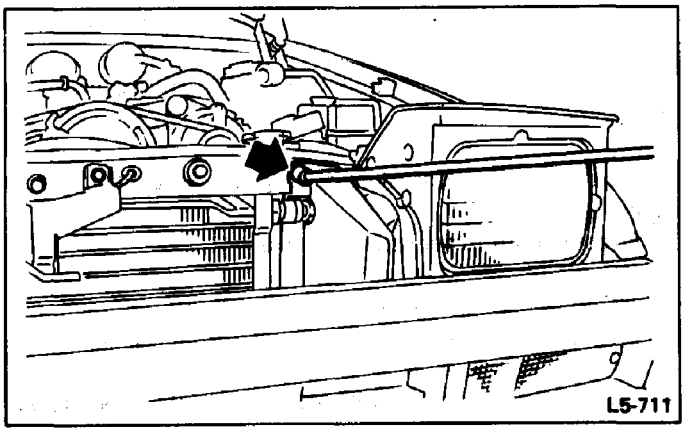

Fig. 38

14) Extract front bumper with help of co-worker.

Be careful not to damage harness.

15) Disconnect front combination light harness connector.

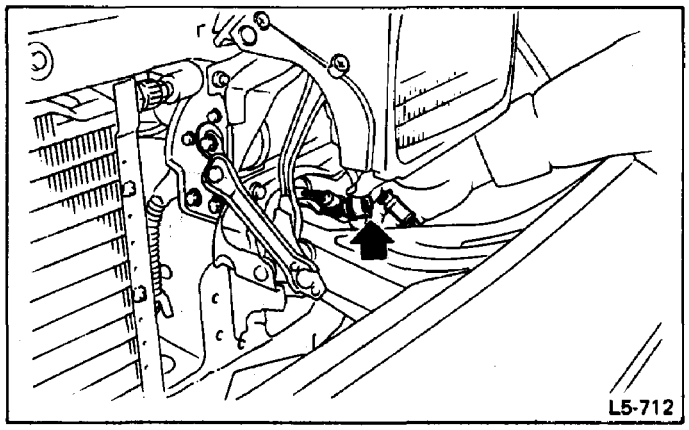

Fig. 39

16) Remove front bumper.

Rear Bumper

REMOVAL

1) Open trunk lid.
2) Remove trunk lid trim.
3) Disconnect license light harness connector, remove grommet from body and transfer connector outside trunk.

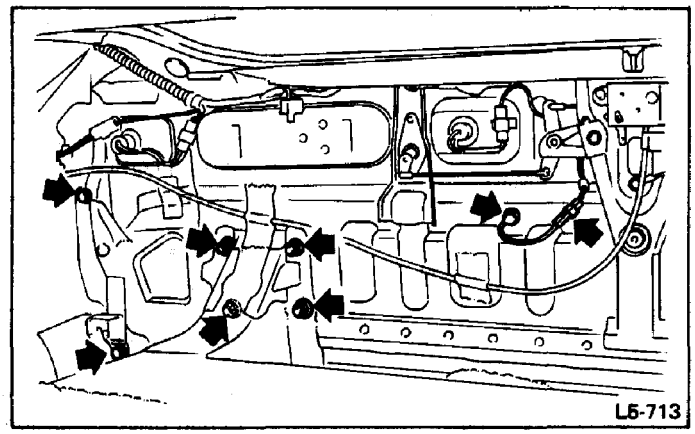

Fig. 40

4) Remove bolts which secure sides of rear bumper.
5) Remove nuts which secure bumper stays.
6) Remove rear bumper.

INSTALLATION

1) To install, reverse removal procedures.

Be sure to adjust clearances between bumper and rear combination light and between bumper and tail light to 8 mm (0.31 in).

Service Instructions for Resin Bumper

PROCESS STEPS

<table>
<tr><th>Process No.</th><th>Process name</th><th colspan="2">Job contents</th></tr>
<tr><td>1</td><td>Bumper mounting</td><td colspan="2">Set bumper on paint worktable if required. Use paint worktable conforming to inner shape of bumper when possible.
 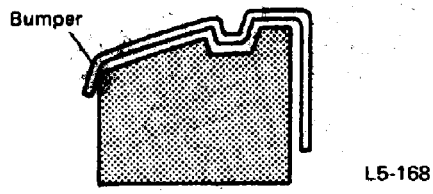

Fig. 41 Set bumper section</td></tr>
<tr><td>2</td><td>Masking</td><td colspan="2">Mask specified part (black base) with masking tape. Use masking tape for resin (example, Nichiban No. 533, etc.). For details, see the following figures.</td></tr>
<tr><td>3</td><td>Degreasing, cleaning</td><td colspan="2">Clean all parts to be painted with white gasoline, normal alcohol, etc. to remove dirt, oil, fat, etc.</td></tr>
<tr><td>4</td><td>Primer paint</td><td colspan="2">Apply primer one to all parts to be painted, using air gun. Use primer (clear).</td></tr>
<tr><td>5</td><td>Drying</td><td colspan="2">Dry at normal temperature [10 to 15 min. at 20°C (68°F)].
In half-dried condition. Resin primer paint is dissolved by solvent e.g. thinner, etc. Therefore, if dust, dirt must be removed, use ordinary alcohol, etc.</td></tr>
<tr><td rowspan="2">6</td><td rowspan="2">Top coat paint</td><td>Solid color</td><td>Metallic color</td></tr>
<tr><td>Use section (block) paint for top coat.
• Paint in use (for each color)
Solid paint
Hardener PB
Thinner T-301
• Mixing ratio: Main agent vs. hardener = 4 : 1
• Viscosity: 10 – 13 sec/20°C (68°F)
• Film thickness: 35 – 45μ
• Spraying pressure: 245 – 343 kPa (2.5 – 3.5 kg/cm², 36 – 50 psi)</td><td>←
• Paint in use (for each color)
Metallic paint
Hardener PB
Thinner T-306
• Mixing ratio: Main agent vs. hardener = 10 : 1
• Viscosity: 10 – 13 sec/20°C (68°F)
• Film thickness: 15 – 20μ
• Spraying pressure: 245 – 343 kPa (2.5 – 3.5 kg/cm², 36 –50 psi)</td></tr>
<tr><td>7</td><td>Drying</td><td>Not required.</td><td>Dry at normal temperature [10 min. or more at 20°C (68°F)].
In half-dried condition, avoid dust, dirt.</td></tr>
<tr><td>8</td><td>Top coat (II)</td><td>Not required.</td><td>Apply clear to parts with top coat (I), three times at 5 – 7 minute intervals.
• Paint in use
Metallic paint
Hardener PB
Thinner T-301
• Mixing ratio: Clear vs. hardener = 6 : 1
• Viscosity: 14 – 16 sec/20°C (68°F)
• Film thickness: 25 – 30μ
• Spraying pressure: 245 – 343 kPa (2.5 – 3.5 kg/cm², 36 – 50 psi)</td></tr>
</table>

Process No.	Process name	Job contents
9	Drying	60°C (140°F), 60 min. or 80°C (176°F), 30 min. If higher than 80°C (176°F), PP may be deformed. Keep maximum temperature of 80°C (176°F).
10	Inspection	Paint check.
11	Masking removal	Remove masking in process No. 2.

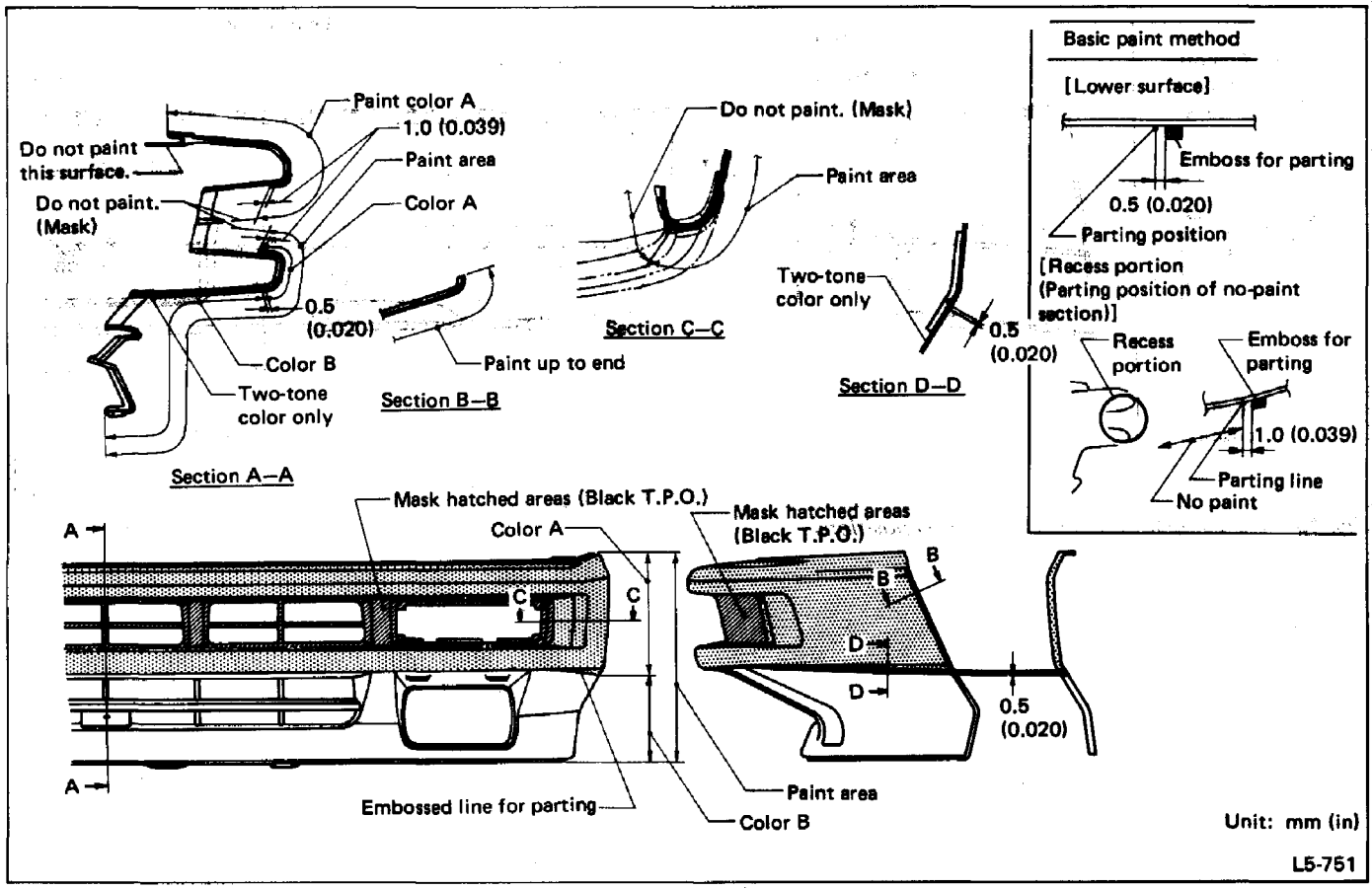

Fig. 42 Front bumper masking and painting positions

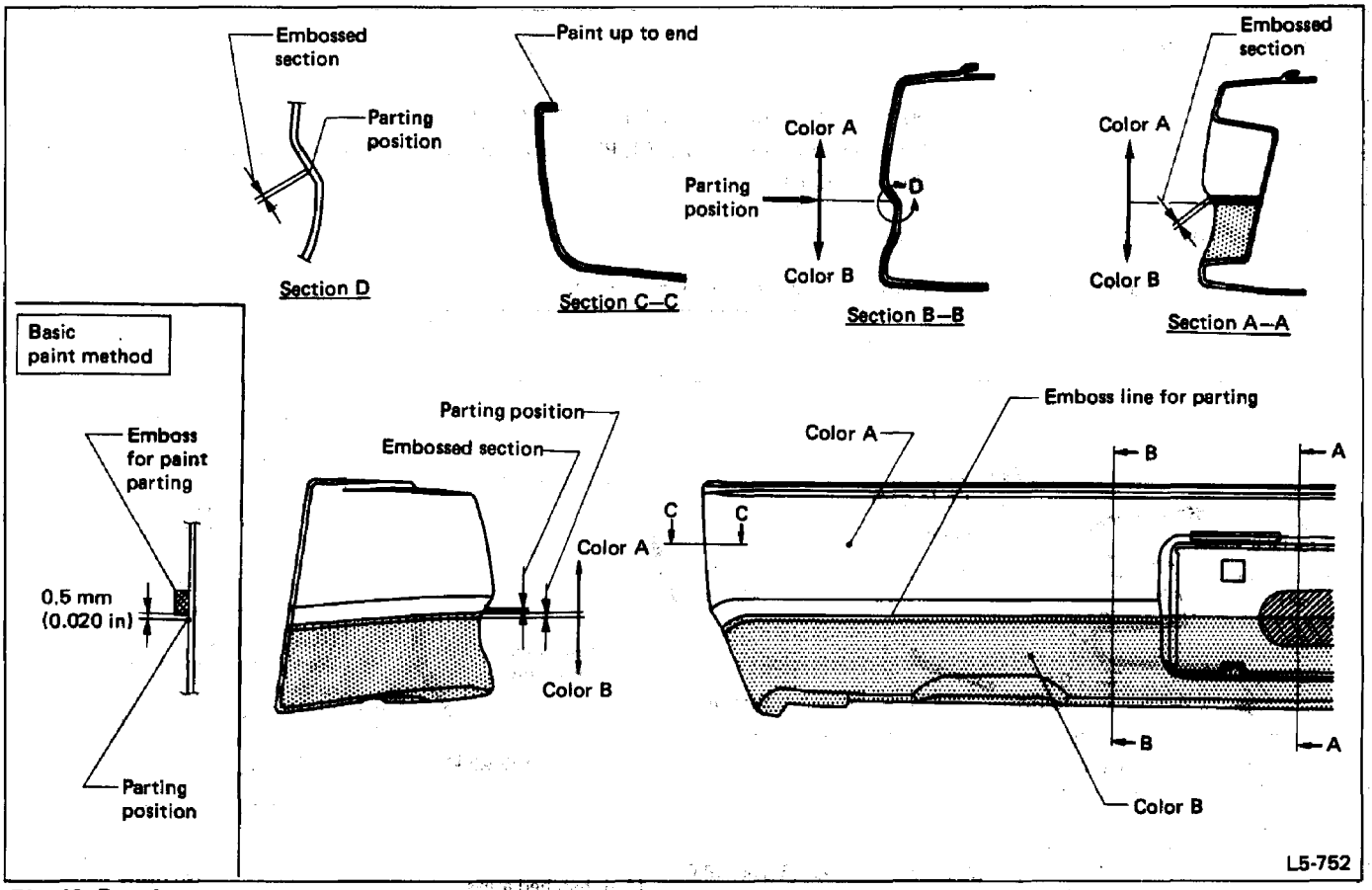

Fig. 43 Rear bumper masking and painting positions

Repair Instructions for Colored Resin Bumper

All resin bumpers are provided with grained surface, and if the surface is damaged, it cannot normally be restored to its former condition. Damage limited to shallow scratches that cause only a change in the lustre of the base material or coating, can be almost fully restored. Before repairing a damaged area, explain this point to the customer and get an understanding about the matter.
Repair methods are outlined below, based on a classification of the extent of damage.

(1) Minor damage causing only a change in the lustre of the bumper due to a light touch

Almost restorable.

<table>
<tr><th>Process No.</th><th>Process name</th><th colspan="2">Job contents</th></tr>
<tr><td>1</td><td>Cleaning</td><td colspan="2">Clean the area to be repaired using water.</td></tr>
<tr><td>2</td><td>Sanding</td><td colspan="2">Grind the repairing area with #500 sandpaper in a "featherig" motion.</td></tr>
<tr><td rowspan="3">3</td><td rowspan="3">Finish</td><td>Resin section</td><td>Coated section</td></tr>
<tr><td>Repeatedly apply wax to the affected area using a soft cloth (such as flannel). Recommended wax: NITTO KASEI Soft 99 TIRE WAX BLACK, or equivalent.</td><td rowspan="2">Perform either the same operation as for the resin sectin or process No. 18 and subsequent operations in the "(3)" section, depending on the degree and nature of damage.</td></tr>
<tr><td>Polish the waxed area with a clean cloth after 5 to 10 minutes.</td></tr>
</table>

(2) Deep damage caused by scratching fences, etc.

A dent cannot be repaired but a whitened or swelled part can be removed.

<table>
<tr><th>Process No.</th><th>Process name</th><th colspan="2">Job contents</th></tr>
<tr><td>1</td><td>Cleaning</td><td colspan="2">Clean damaged area with water.</td></tr>
<tr><td>2</td><td>Removal of damaged area</td><td colspan="2">Cut off protruding area, if any, due to collision, using a putty knife.</td></tr>
<tr><td>3</td><td>Sanding</td><td colspan="2">Grind the affected area with #100 to #500 sandpaper.</td></tr>
<tr><td rowspan="2">4</td><td rowspan="2">Finish</td><td>Resin section</td><td>Coated section</td></tr>
<tr><td>Same as Process No. 3 in the "(1)" section.</td><td>Perform Process No. 12 and subsequent operations in the "(3)" section.</td></tr>
</table>

(3) Deep damage such as a break or hole that requires filling

Much of the peripheral grained surface must be sacrificed for repair, and the degree of restoration is not really worth the expense. (The surface, however, will become almost flush with adjacent areas.)

Recommended repair kit: Resin Part Repair Kit (NRM)

Process No.	Process name	Job contents
1	Bumper removal	Remove bumper as required.
2	Part removal	Remove parts built into bumper as required.
3	Bumper placement	Place bumper on a paint worktable as required. It is recommended that contour of worktable accommodate internal shape of bumper. 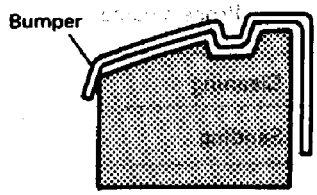 L5-168 *Fig. 44* Set bumper section
4	Surface preparation	Remove dust, oil, etc. from areas to be repaired and surrounding areas, using a suitable solvent (NRM No. 900 Precleno, white gasoline, or alcohol).
5	Cutting	If nature of damage is cracks or holes, cut a guide slit of 20 to 30 mm (0.79 to 1.18 in) in length along the crack or hole up to the bumper's base surface. Then, bevel or "vee-out" the affected area using a knife or grinder. 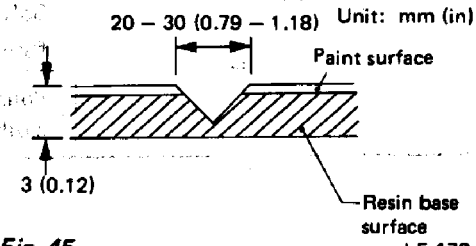 *Fig. 45* L5-172
6	Sanding (I)	Grind beveled surface with sandpaper (#40 to #60) to smooth finish.
7	Cleaning	Clean the sanded surface with the same solvent as used in Process No. 4.
8	Temporary welding	Grind the side just opposite the beveled area with sandpaper (#40 to #60) and clear using a solvent. Temporarily spot-weld the side, using a resin welding rod and heater gun. 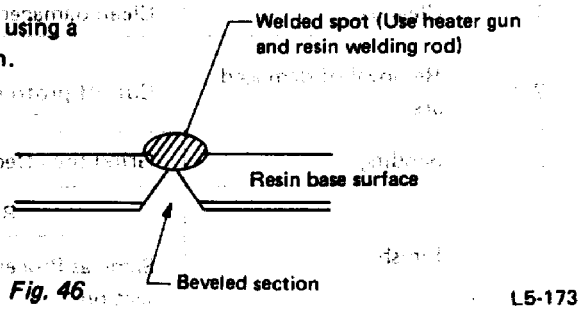 *Fig. 46* L5-173 **a. Do not melt welding rod until it flows out. This results in reduced strength.** **b. Leave the welded spot unattended until it cools completely.**

Process No.	Process name	Job contents
9	Welding	Using a heater gun and resin welding rod, weld the beveled spot while melting the rod and damaged area. 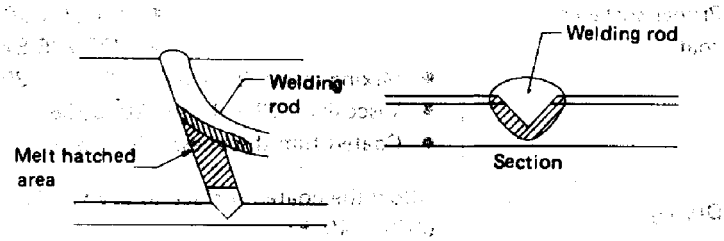 *Fig. 47* L5-174 **a. Melt the sections indicated by hatched area.** **b. Do not melt welding rod until it flows out, in order to provide strength.** **c. Always keep the heater gun 1 to 2 cm (0.4 to 0.8 in) away from the welding spot.** **d. Leave the welded spot unattended until it cools completely.**
10	Sanding (II)	Remove excess part of weld with a putty knife. If a drill or disc wheel is used instead of the knife, operate it at a rate lower than 1500 rpm and grind the excess part little by little. A higher rpm will cause the resin substrate to melt from the heat. 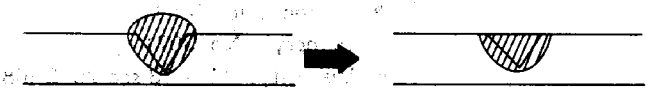 *Fig. 48* L5-175 Sand the welded spot smooth with #240 sandpaper.
11	Masking	Mask the black substrate section (as indicated in the figure), using masking tape. Recommended masking tape: Nichiban No. 533 or equivalent For details, see the figures showing the masking portions.
12	Cleaning/degreasing	Completely clean the entire coated area, using solvent similar to that used in Process No. 4.
13	Primer coating	Apply a coat of primer to the repaired surface and its surrounding areas. Mask these areas, if necessary. Recommended primer: No. 364 PP Primer **Be sure to apply one coat of primer at a spraying pressure of 245 to 343 kPa (2.5 to 3.5 kg/cm^2, 36 to 50 psi) with a spray gun.**
14	Leave unattended	Leave the repaired area unattended at 20°C (68°F) for 10 to 15 minutes until primer is half-dry. **If dirt or dust comes into contact with the coated area, wipe off with a cloth dampened with alcohol. (Do not use thinner since the coated area tends to melt.)**

<table>
<tr><th>Process No.</th><th>Process name</th><th colspan="2">Job contents</th></tr>
<tr><td>15</td><td>Primer surfacer coating</td><td colspan="2">Apply a coat of primer surfacer to the repaired area two or three times at an interval of 3 to 5 minutes.
Recommended surfacer: ● UPS 300 Flex Primer
● No. 303 UPS 300 Exclusive hardener
● NPS 725 Exclusive Reducer (thinner)
● Mixing ratio: 2 : 1 (USP300 : No. 303)
● Viscosity: 12 – 14 sec/20°C (68°F)
● Coated film thickness: 40 – 50μ</td></tr>
<tr><td>16</td><td>Drying</td><td colspan="2">Allow the coated surface to dry for 60 minutes at 20°C (68°F) [or 30 minutes at 60°C (140°F)].</td></tr>
<tr><td>17</td><td>Sanding (III)</td><td colspan="2">Sand the coated surface and its surrounding areas using #400 sandpaper and water.</td></tr>
<tr><td>18</td><td>Cleaning/degreasing</td><td colspan="2">Same as Process No. 12.</td></tr>
<tr><td rowspan="2">19</td><td rowspan="2">Topcoating (I)</td><td>Solid color</td><td>Metallic color</td></tr>
<tr><td>Use a "block" coating method.
● Recommended paint:
Suncryl (SC)
No. 307 Flex Hardener
SC Reducer (thinner)
● Mixing ratio: 3 : 1
(Suncryl : No. 307)
● Viscosity: 11 – 13 sec/20°C (68°F)
● Coated film thickness: 40 – 50μ
● Spraying thickness: 245 – 343 kPa
(2.5 – 3.5 kg/cm², 36 – 50 psi)</td><td>←
←
←
←
● Coated film thickness: 20 – 30μ
←</td></tr>
<tr><td>20</td><td>Leaving unattended</td><td>Not required.</td><td>Leave unattended at 20°C (68°F) for at least 10 minutes until the topcoated area is half-dry.
Be careful to keep dust or dirt from coming into contact with the affected area.</td></tr>
<tr><td>21</td><td>Topcoating (II)</td><td>Not required.</td><td>Apply a coat of clear three times at an interval of 3 to 5 minutes.
● Recommended paint:
SC710 Overlay Clear
No. 307 Flex Hardener
SC Reducer (thinner)
● Mixing ratio: 3 : 1
(SC710 : No. 307)
● Viscosity: 10 – 13 sec/20°C (68°F)
● Coated film thickness: 20 – 30μ
● Spraying pressure: 245 – 343 kPa
(2.5 – 3.5 kg/cm², 36 – 50 psi)</td></tr>
</table>

Process No.	Process name	Job contents
22	Drying	Allow the coated surface at 20°C (68°F) for two hours or 60°C (140°F) for 30 minutes. **Do not allow the temperature to exceed 80°C (176°F) since this is the sure way of deforming the resin substrate.**
23	Inspection	Carefully check the condition of the repaired area.
24	Masking removal	Remove masking tape applied in Process Nos. 11 and 13.
25	Parts installation	Install parts on bumper in reverse order of removal.
26	Bumper installation	Install bumper.

Body Parts

Front Fender

REMOVAL

1) Remove mud guard.
2) Remove air dam skirt.
3) Remove front bumper.
4) Remove front combination lamps.
5) Remove bolts which hold fenders and detach fenders.

Be careful not to scratch body panels with fender edges when removing it.

INSTALLATION

Installation is in the reverse order of removal.

CHECKS AFTER INSTALLATION

Check for alignment of front fender with hood and front door with front fender at all points. Adjust, if necessary.

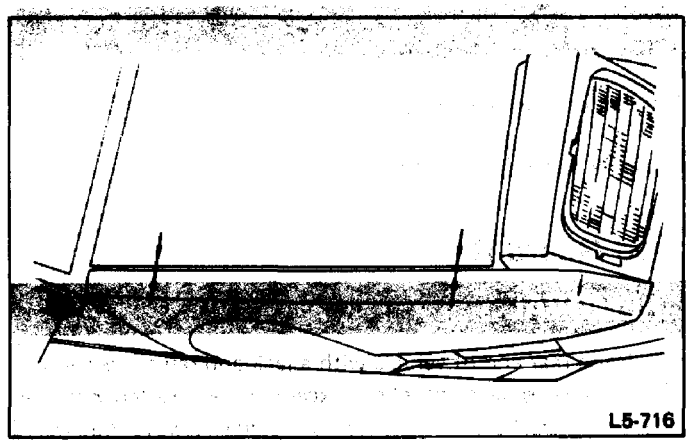

Fig. 49 Gap between front hood and fender

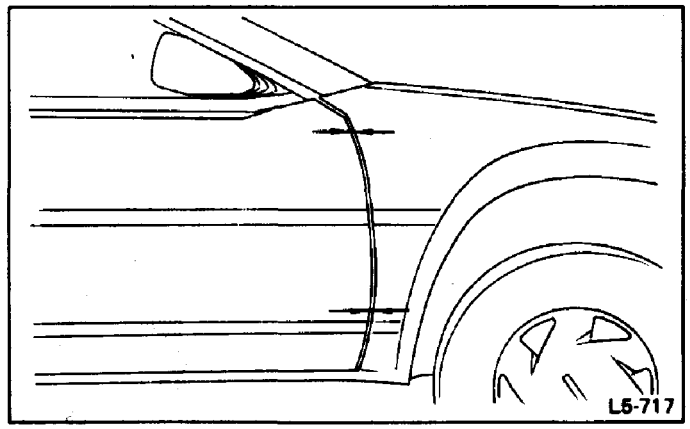

Fig. 50 Gap between front door and fender

Mud Guard

REMOVAL

1) Raise front end of vehicle with a jack and remove wheels.
2) Remove screws and clips (except those inserted into fender flange) which hold mud guard. Move mud guard toward the center of car body and remove mud guard and clips (from flange) as a unit.

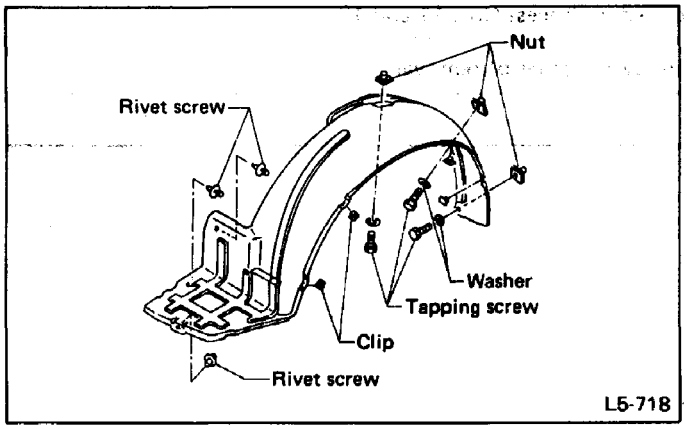

Fig. 51

INSTALLATION

Installation is in the reverse order of removal.

Only use new nuts and clips.

Mud Guard R

REMOVAL

1) Raise rear end of vehicle with a jack and remove wheels.
2) Remove screws and clips (except those inserted into rear quarter outer flange) which hold mud guard. Move mud guard toward the bottom of car body, then remove mud guard and clips (from flange) as a unit.

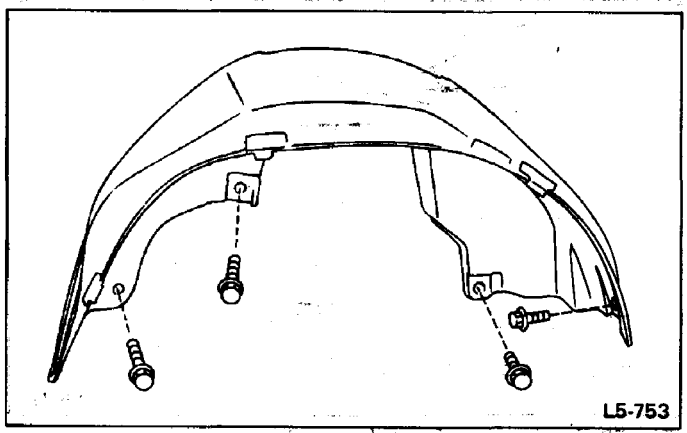

Fig. 52

Exhaust Cover

REMOVAL

1) Disconnect muffler and exhaust pipe.
2) Remove exhaust cover.

INSTALLATION

Installation is in the reverse order of removal.
Be sure to adjust clearances between exhaust cover and adjacent parts as equally as possible before finally tightening bolts.

If exhaust cover is deformed or damaged, causing unequal clearances between it and muffler or exhaust pipe, repair or replace exhaust cover.

Outer Accessories

Rearview Mirror

REMOVAL

ELECTRICALLY-CONTROLLED TYPE

1) Open door and remove gusset cover from passenger compartment. Refer to "Door Removal" for removal instructions.
2) Remove three screws.
3) Withdraw harness with connector from hole in car body.

Do not withdraw harness forcibly.

4) Disconnect connectors.

Do not push body connector back through the hole.

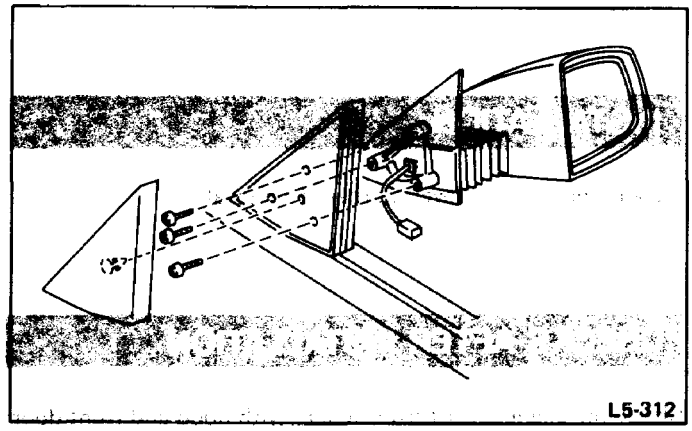

Fig. 53

Cover and Molding

REMOVAL

1) Front lower molding
   (1) Remove wiper arm ASSY, wheel ASSY and front panel seat.
   (2) Remove front screw rivets.
   (3) Remove molding from clips by pushing it up along glass surface.
   (4) Remove clips from car body.
2) Front pillar cover
   (1) Break clips.
3) Drip molding
   (1) Use same procedures as for 4-door series.
4) Upper and lower side moldings
   (1) Break clips.
   (2) On lower side molding, remove screw from the back.
5) Rear quarter molding
   (1) Break clips.
6) Center pillar and rear pillar cover
   (1) Break clips.
7) Rear upper molding
   (1) Detach rear upper molding by pulling it from clips horizontally (if upper side molding has already been removed).
   (2) If upper side molding has not been removed, break the clip at the extreme end and lift the end of molding to disengage all the clips.
8) Rear lower molding
   (1) Open trunk lid.
   (2) Remove screws which hold molding.

INSTALLATION

1) Front lower molding
   (1) Install clips on front lower molding securely on the glass side.
   (2) Align the clips with holes in car body on the glass side and push them in forcibly.
   (3) Place the front end of molding under front panel seal, and secure with clips and screw rivets.
   (4) Install wiper and associated parts.
2) Center and rear pillar covers
   (1) Use only new clips when installing covers.
   (2) Insert clips into holes in car body by hammering.
3) Front pillar cover

Use same procedures as in 2) above.

4) Top rail molding
   (1) To install, reverse removal procedures.
5) Rear quarter molding

Use same procedures as in 2) above.

6) Rear upper molding
   (1) Replace clips if broken or deformed.
   (2) Place pawl section of molding on clips and, while lightly holding the end of molding on glass side, insert clips into holes by hammering.
7) Rear lower molding
   (1) Align holes in molding with screw grommets on the side of car.
   (2) Tighten screws, starting with the center one and moving toward the end.
8) Side upper molding

Use same procedures as in 2) above.

9) Side lower molding
   (1) Replace clips if broken or damaged.
   (2) Align clips with holes in body and insert them into holes by hammering.
   (3) Tighten the screw at the extreme rear end.

Where necessary, some moldings and covers should be overlapped.

SUBARU

1988

	Page
MECHANISM AND FUNCTION	2
Door	2
Window Glass	2
SERVICE DATA	3
Door Alignment	3
COMPONENT PARTS	4
Door	4
Window Glass	5
SERVICE PROCEDURE	6
Door Assembly	6
Door Glass	15
Window Glass	19
TROUBLESHOOTING	25
Door Glass	25
Door Lock System	26

MECHANISM AND FUNCTION

Door

Door Hinge

A two-stage arm checker is used to insure that the door opens and closes in two steps and the checker arm operates with weak friction over the entire opening range of the door. This arrangement allows the door to stop easily in any position and improves the overall ease of door opening and closing.

Degree of opening of door hinge	1st stage	34°
	2nd stage	56°

Door Lock System

The surface where the lock contacts the striker is covered with a soundproof resin which provides excellent wear resistance. This lessens the striker's shock noise and improves the closing sound of the door.

Door Glass

The radius of curvature of the glass is 1,250 mm (49.21 in). This, together with flush surfaces, improves aerodynamic characteristics.

Automatic Door Lock

Pressing the driver-seat door lock knob (or key plate) permits the locking and unlocking of all doors with one touch.

Window Glass

An adhesive is used to attach the following.
Windshield, rear quarter glass and rear window glass

ADHESIVE

1) General
A single-liquid urethane adhesive hardens into a gum elastic body at room temperature through a chemical reaction with water content in the air.

2) Usable time
Although the time during which the adhesive is usable varies with the environmental temperature, make it a standard practice to finish attaching the glass within thirty minutes after a cartridge is opened for use.

3) Hardening time
Leave the vehicle alone a whole day after attaching the glass. In addition, high-speed or off-road driving should be avoided for three days to allow the adhesive to harden completely.

4) Primer
The job of a primer is to increase the effect of adhesion. Therefore, it should be applied to the contact surfaces of the glass and body without fail.

5) Precautions in handling adhesive and primer
   (1) The adhesive and primer quality deteriorate about six months after manufacture. Thus, adhesive and primer which are more than six months old must not be used. (The date of manufacture is indicated on the adhesive package.)
   (2) Keep the adhesive and primer in a cool, dark place.
   (3) The adhesive and primer harden through a reaction with water content in the air. Therefore, remove the seals right before use and do not use any remains.
   (4) Shake primer well before using.

The moulding around the glass uses a flush mount to reduce the difference in height between the glass and moulding, thereby improving the aerodynamic characteristic and reducing wind noise.

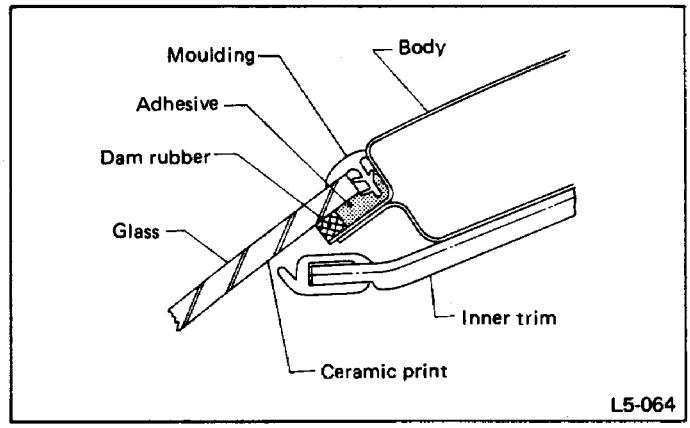

Fig. 1

SERVICE DATA

Door Alignment

Unit: mm (in)

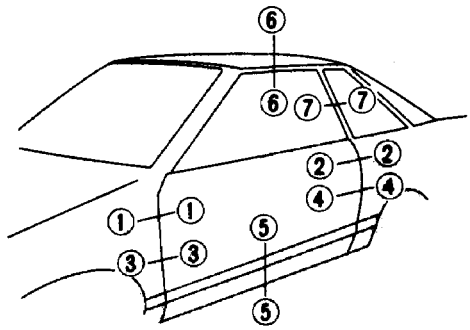

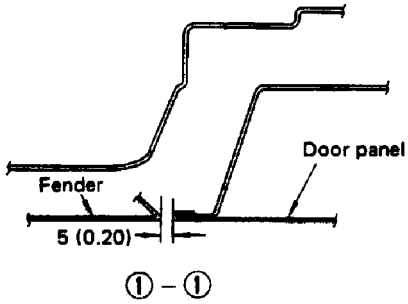

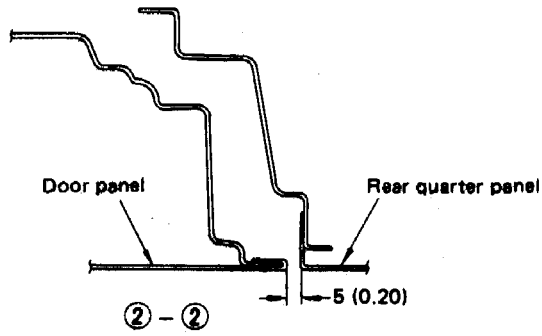

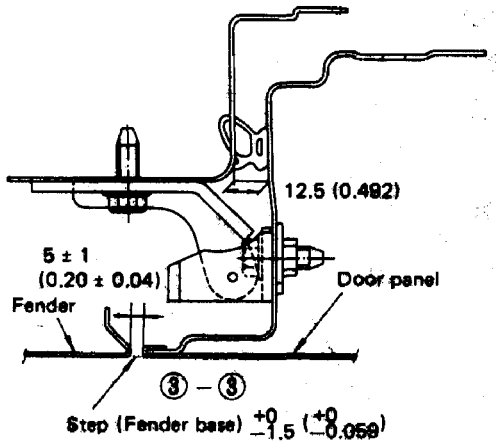

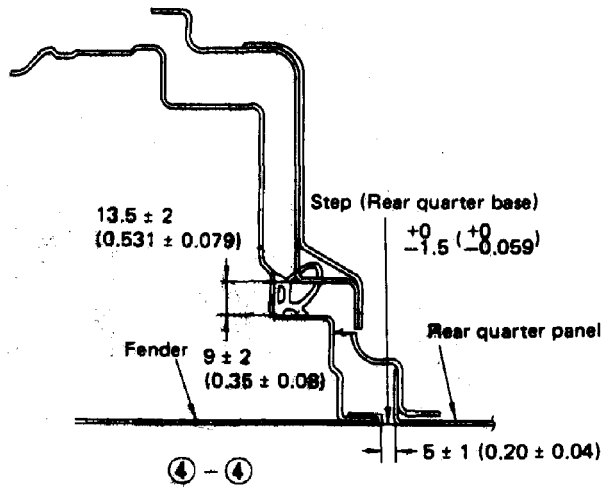

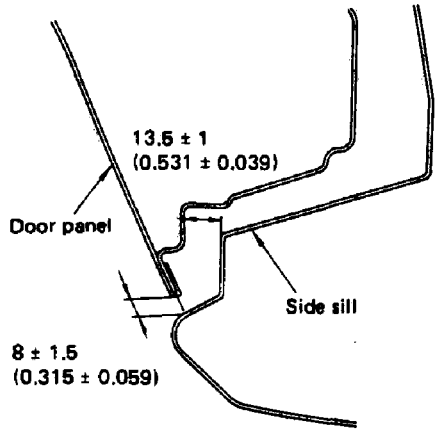

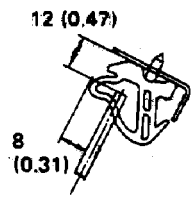

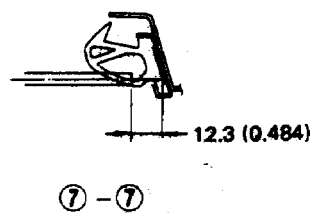

Fig. 2

L5-260

COMPONENT PARTS

Door

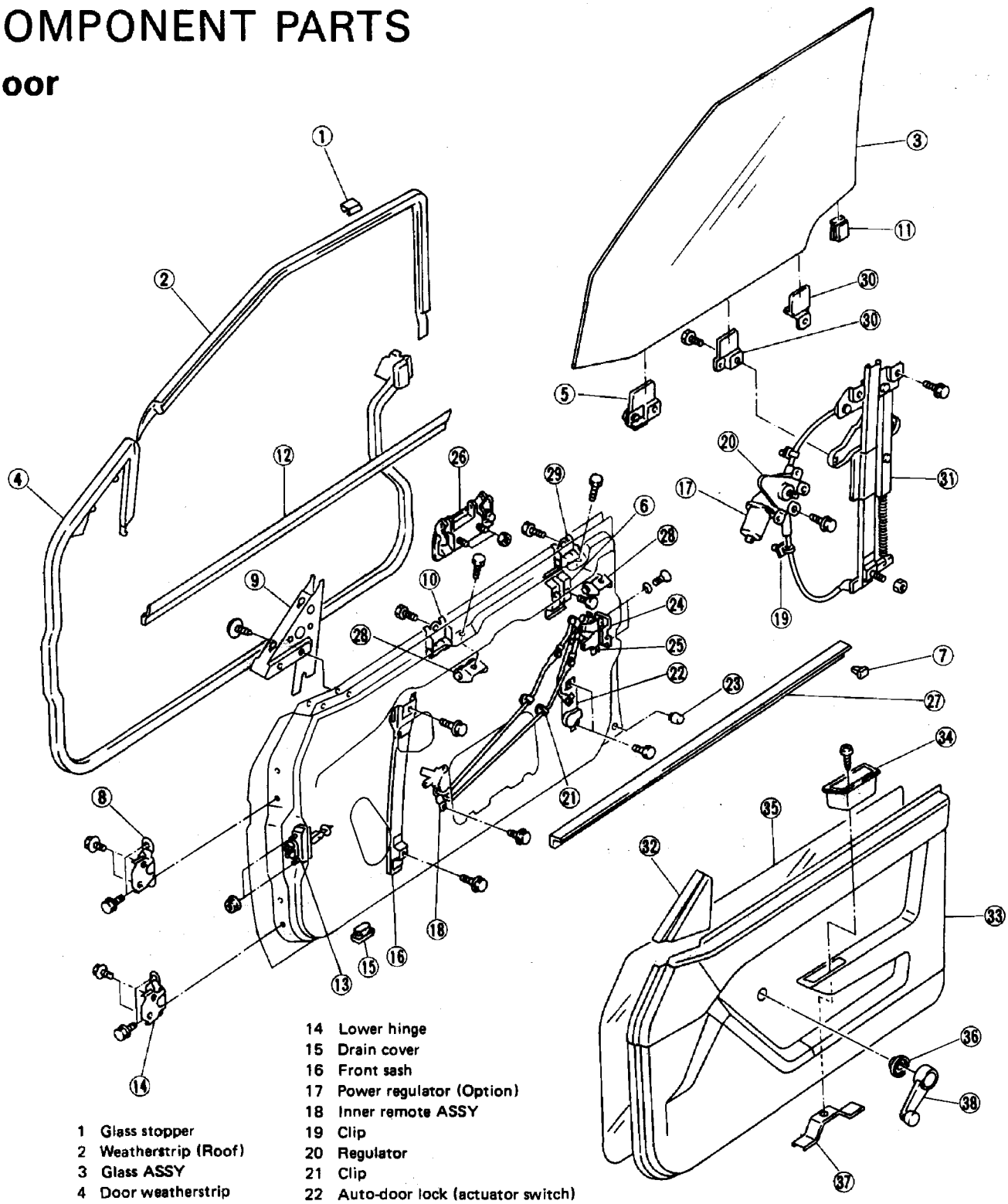

1 Glass stopper
2 Weatherstrip (Roof)
3 Glass ASSY
4 Door weatherstrip
5 Upper stopper
6 Handle bracket
7 Rivet washer
8 Upper hinge
9 Gusset ASSY
10 Stabilizer
11 Upper stopper
12 Outer weatherstrip
13 Checker
14 Lower hinge
15 Drain cover
16 Front sash
17 Power regulator (Option)
18 Inner remote ASSY
19 Clip
20 Regulator
21 Clip
22 Auto-door lock (actuator switch)
23 Stopper
24 Striker
25 Latch
26 Outer handle
27 Inner weatherstrip
28 Inner stabilizer
29 Outer stabilizer
30 Glass holder
31 Sash
32 Gusset cover
33 Door trim
34 Pull handle
35 Sealing cover
36 Escutcheon
37 Door trim bracket
38 Regulator handle

Fig. 3

L5-256

Window Glass

Windshield Glass

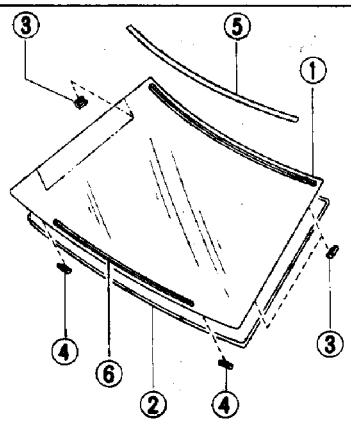

1 Glass
2 Dam rubber
3 Spacer
4 Stopper
5 Molding
6 Dam rubber

L5-725

Fig. 4

Rear window Glass

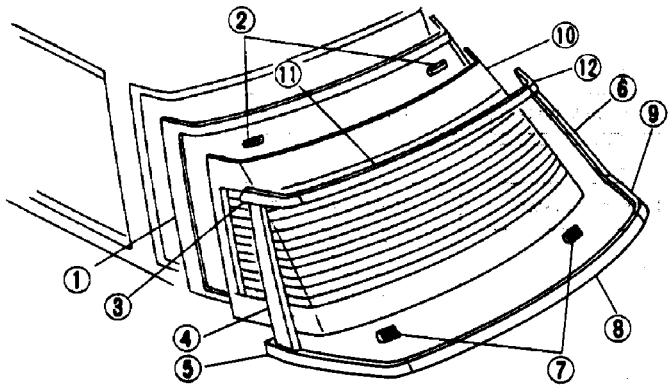

1 Dam rubber
2 Spacer
3 Moulding side upper (LH)
4 Cover rear pillar (LH)
5 Moulding side lower (LH)
6 Cover rear pillar (RH)
7 Stopper
8 Rear lower moulding
9 Moulding side lower (RH)
10 Glass
11 Rear upper moulding
12 Moulding side upper (RH)

L5-258

Fig. 5

Rear Quarter Glass

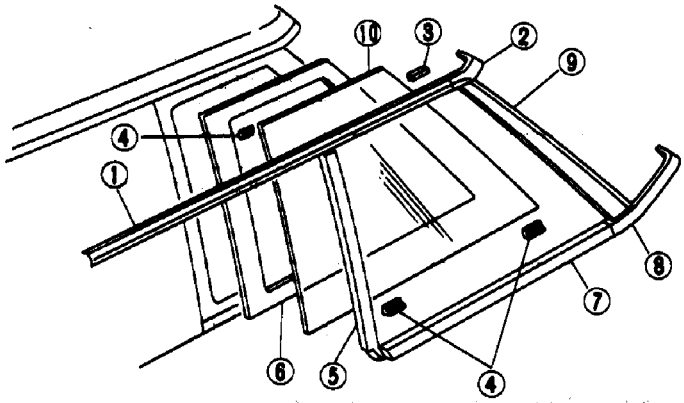

1 Drip moulding
2 Moulding side upper
3 Spacer
4 Stopper
5 Center pillar cover (LH)
6 Dam rubber
7 Moulding (R.Q)
8 Moulding side lower
9 Cover rear pillar
10 Glass

L5-259

Fig. 6

SERVICE PROCEDURE

Door Assembly

Procedure Chart for Removing and Installing Door and Related Parts

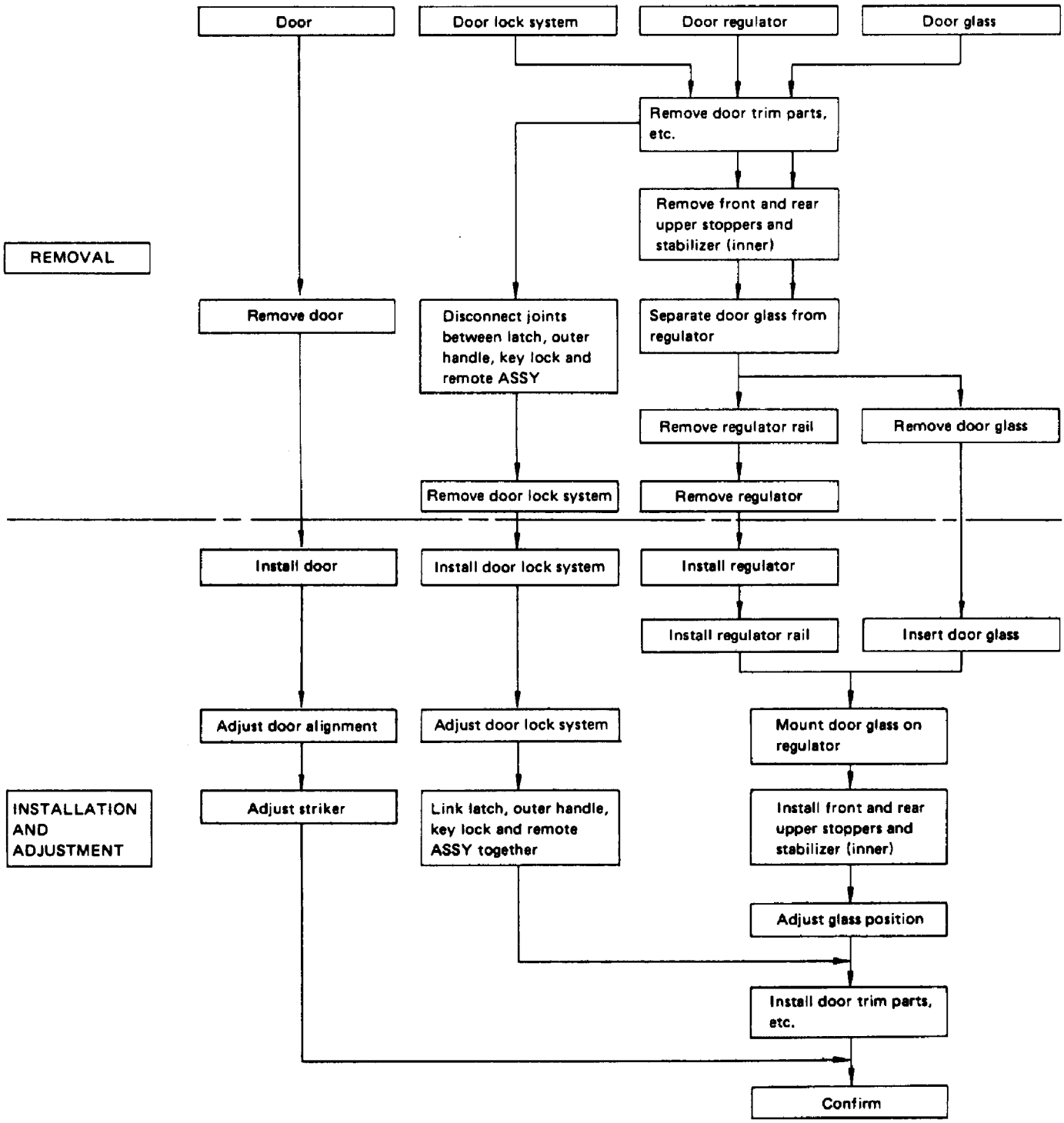

This flowchart shows the main procedures for removing and installing the door and its related parts. For details, refer to the text.

Door and Hinge

The method described below involves removing and installing only the front door itself. There is another method of removal and installation in which the front fender is first removed. The hinges may be removed and installed with the front fender removed. But the method of removal and installation is described below and should be performed after removing the door itself.

REMOVAL

1) Place a cloth or a wood block under door to prevent damage, and support door with a jack.
2) Remove checker pin by driving it upward. Be careful not to damage door and body.

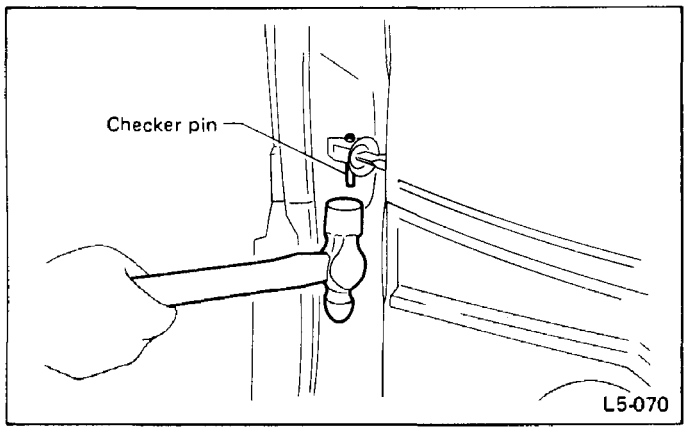

Fig. 7

3) Remove bolts (M8) securing upper and lower hinges to door, then remove door itself from hinges.
4) Remove hinges by loosening hinge mounting bolts (M8) off body.

a. Work carefully to avoid damaging door.
b. If equipped with power window regulator, disconnect harness first.

INSTALLATION

1) Fasten hinges to body with bolts kept after removal.
2) Install door itself to hinges.
3) Install checker pin.

Apply grease to moving parts of door hinges.

ADJUSTMENT

1) Using DOOR HINGE WRENCH (925610000), loosen bolts securing upper and lower hinges to body, and adjust fore-and-aft and vertical alignment of door.

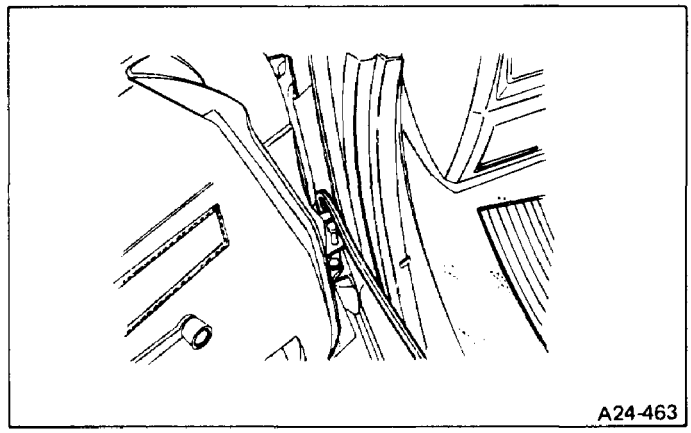

Fig. 8

2) Loosen door striker and adjust opening/closing direction of door.

Hinge tightening torque (body side):
25 – 34 N·m (2.5 – 3.5 kg-m, 18 – 25 ft-lb)
Hinge tightening torque (door side):
20 – 29 N·m (2.0 – 3.0 kg-m, 14 – 22 ft-lb)

Trim Panel

REMOVAL

1) Remove screws which hold gusset cover, and detach cover.
2) Remove screws which hold pull handle and other screws located further inside.
3) First remove retainer spring and then regulator handle. Use a wire bent at one end, as shown below, for easier removal of retainer spring.

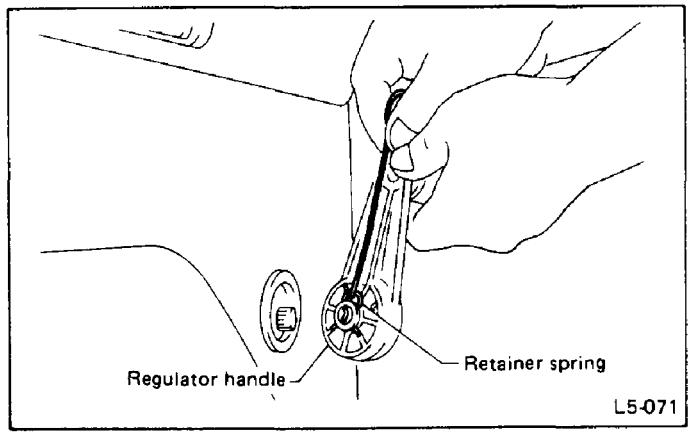

Fig. 9

4) Remove remote handle cover.
5) Remove clip attached to trim panel using CLIP PULLER (925580000). Then remove trim panel. Be careful not to break clip by applying undue force.

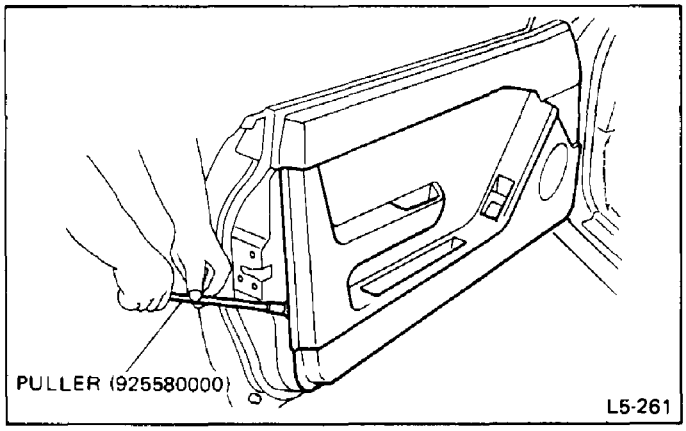

Fig. 10

INSTALLATION

Installation is in the reverse order of removal.

a. When installing trim panel, check clip, hold the clip section down by hand, and push into place.
b. Adjust so that remote cover and trim panel do not overlap, and install remote cover clip to remote ASSY.

Sealing Cover

REMOVAL

1) Remove trim panel.
2) Disconnect harness connectors for remote control rear-view mirror and power window (optional).
3) Loosen screws which hold speaker, and remove speaker and harness connector as a unit.
4) Remove remote ASSY.
5) Remove remote clip.
6) Remove door trim bracket.
7) Remove sealer with a spatula.

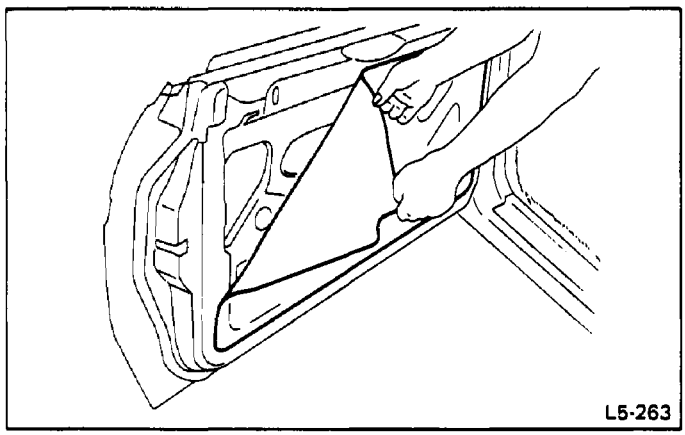

Fig. 11

Be careful because cover may break if sealer is removed forcefully.

INSTALLATION

1) Confirm that sealer is properly applied without breaks. Then install sealing cover.
2) When repairing or replacing sealing cover, use "Cemedine 5430L" as sealer. It may be overlaid on existing sealer.

Any breaks in sealer applied can cause water leakage or entry of air and dust. Be sure scaler is applied in a continuous line.

Checker

REMOVAL

1) Remove trim panel.
2) Remove speaker ASSY.
3) Remove sealing cover.
4) Apply a cloth to door and body to prevent damaging them and remove checker pin by driving it upward.

Be careful not to damage door and body.

5) Completely close door glass.
6) Loosen two nuts securing checker, and take out checker through access hole in underside.

Remove carefully to avoid damaging checker cover.

INSTALLATION

Installation is in the reverse order of removal.

Tightening torque:
5.4 – 9.3 N·m (0.55 – 0.95 kg-m, 4.0 – 6.9 ft-lb)

Inner Remote Assembly

REMOVAL

1) Remove trim panel.
2) Remove sealing cover
3) Disconnect joints of two rods with latch.
4) Remove screws holding remote ASSY. Then remove rods from remote clip by pulling them out.

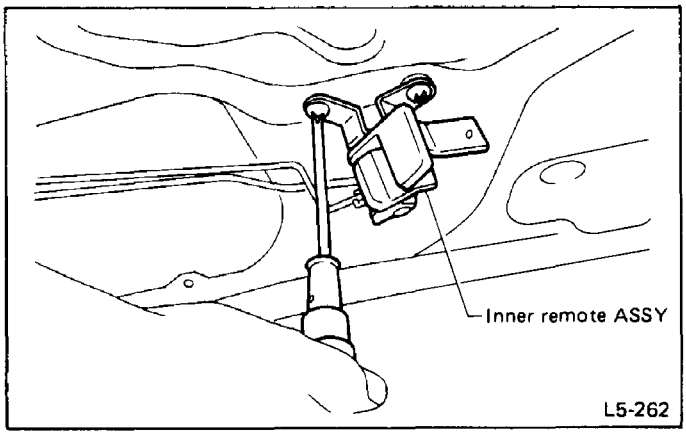

Fig. 12

INSTALLATION

1) Pass two rods through remote clips and rod holes in sealing cover, and install remote ASSY on instrument panel.
2) With door locked, hold upper rod to door latch connector with screws.
3) Attach lower rod to door latch connector with screws. Do not pull connector to make this attachment.

Tightening torque (screw):
4.4 – 7.4 N·m (0.45 – 0.75 kg-m, 3.3 – 5.4 ft-lb)

Door Latch

REMOVAL

1) Remove trim panel.
2) Remove sealing cover.
3) Completely close door glass.
4) Remove remote ASSY from latch.
5) Turn rod holder to disconnect joint between key lock ASSY and rod.
6) Using a flat-head screwdriver, disconnect joint between outer handle and adjusting nut.
7) Loosen three screws securing latch, and remove latch through service hole in bottom.

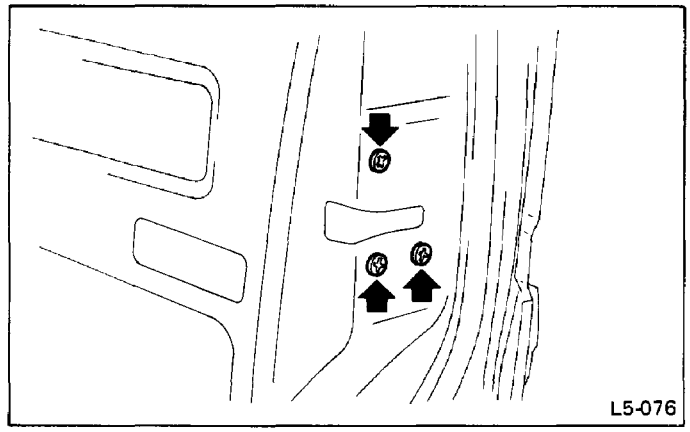

Fig. 13

INSPECTION

1) Check operation of each part.
2) Check each sliding part for proper lubrication.

After installation, be sure lock mechanism operates normally.

Tightening torque (screw):
4.4 – 7.4 N·m (0.45 – 0.75 kg-m, 3.3 – 5.4 ft-lb)

Key Lock

REMOVAL

1) Remove trim panel.
2) Remove sealing cover.
3) Completely close door glass.
4) Remove key lock from door latch rod.
5) Disengage outer handle from door latch rod.
6) Remove outer handle.
7) Remove key lock from outer handle.

INSTALLATION

Installation is in the reverse order of removal.

Install so that key slot in key lock comes to center of hole in outer handle.

Outer Handle

REMOVAL

1) Remove trim panel.
2) Remove sealing cover.
3) Completely close window.
4) Separate outer handle, key lock and door latch rod.
5) Loosen two nuts which hold outer handle, and remove outer handle from outside and handle bracket from inside.

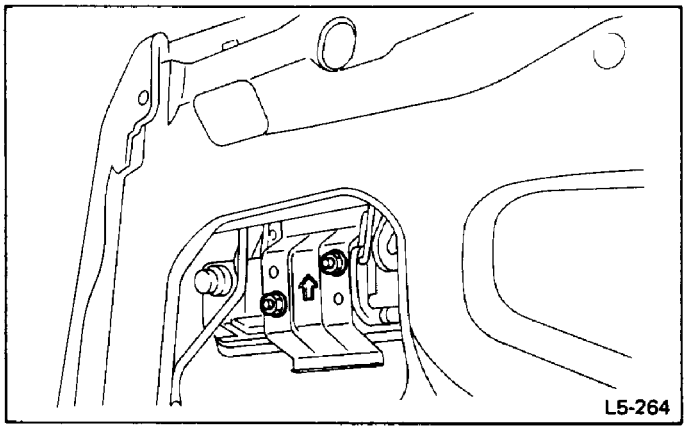

Fig. 14

INSTALLATION

Installation is in the reverse order of removal.

Always install handle bracket with arrow mark facing upward.

Tightening torque:
5.4 – 9.3 N·m (0.55 – 0.95 kg-m, 4.0 – 6.9 ft-lb)

a. Adjust escutcheon to panel properly so that there is no gap.
b. Adjust play between outer handle rod and door latch lever to 0.5 to 1 mm (0.020 to 0.039 in) with adjusting nut provided.

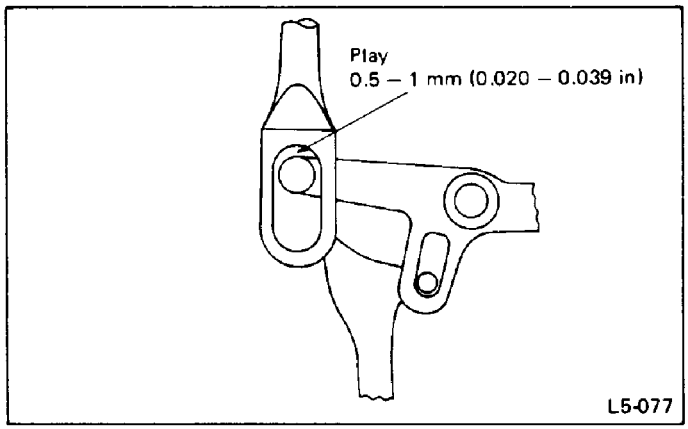

Fig. 15

Door Weatherstrip

REMOVAL

1) Remove trim panel.
2) Remove rearview mirror from door.
3) Remove speaker.
4) Completely close window.
5) Remove sealing cover.
6) Remove weatherstrip at the hook section on the lower end of gusset and slanted section.
7) Extract weatherstrip mounting clips from panel.

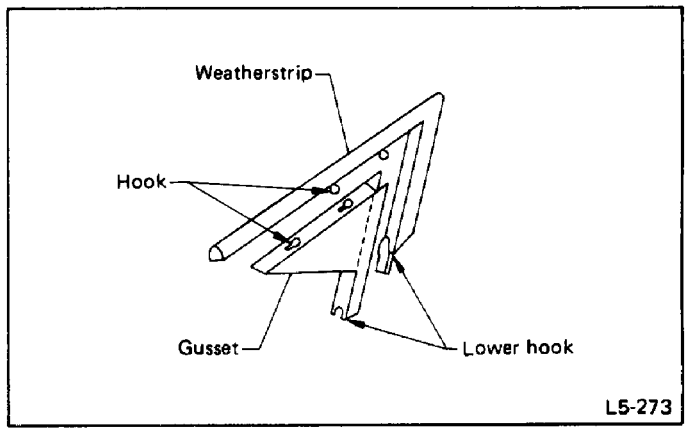

Fig. 16

Outer Weatherstrip

REMOVAL

1) Remove trim panel.
2) Remove rearview mirror from door.
3) Remove end of body weatherstrip.
4) Remove rivet washer securing rear of outer weatherstrip.
5) Put a flat-bladed screwdriver in between outer weatherstrip and door panel, and remove weatherstrip by pulling it upward. (Be careful not to damage door panel.)

INSTALLATION

Installation is in the reverse order of removal.

Roof Weatherstrip

REMOVAL

1) Remove clips holding end of roof weatherstrip from panel.
2) Remove roof weatherstrip from retainer.

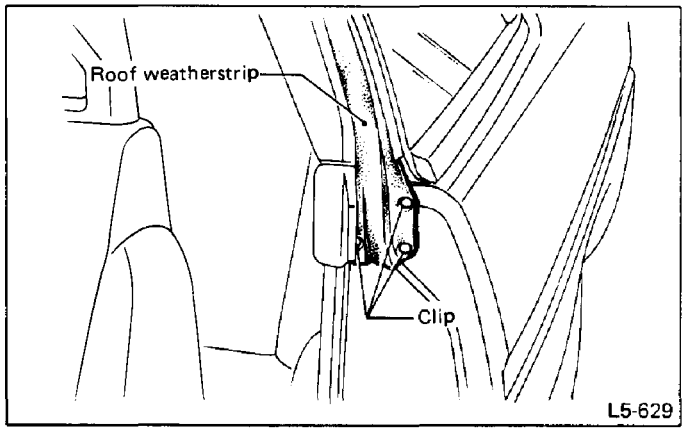

Fig. 17

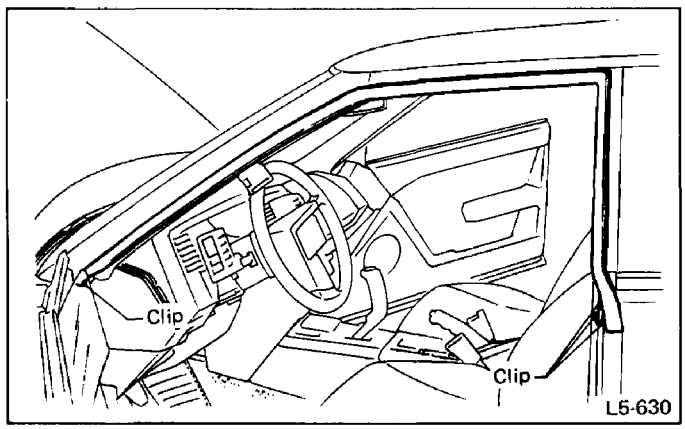

Fig. 18

INSTALLATION

1) Install ends of roof weatherstrip.
2) Put straight portion into retainer using a roller or spatula.

a. When weatherstrip is dirty or dusty, clean it with water silicone. This will make weatherstrip as lustrous as a new one.
b. If door glass and weatherstrip are in tight contact with installed power window, apply water silicone to weatherstrip. It will increase the wear resistance of weatherstrip.
c. Use a cloth soaked with water silicone (oil must not be used), and apply two or three times to roof weatherstrip. Allow several hours for silicone to dry and deliver vehicle only after weatherstrip has dried completely.

Stabilizer

REMOVAL

1) Remove trim panel.
2) Remove rearview mirror from door.
3) Remove sealing cover.
4) Remove outer weatherstrip.
5) Loosen bolt securing inner stabilizer, and remove stabilizer through access hole.

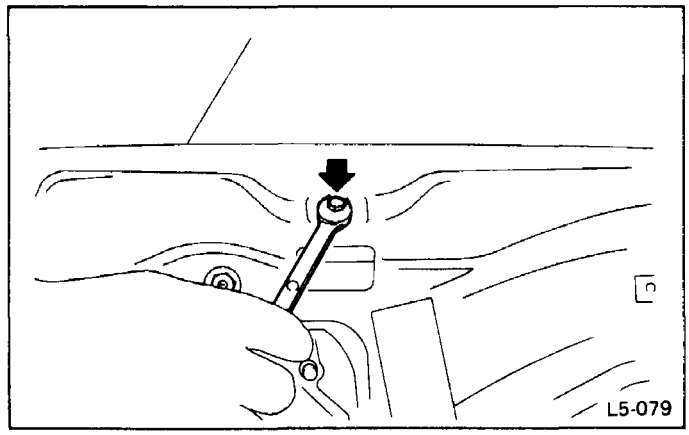

Fig. 19

6) Loosen screw securing outer stabilizer, and remove stabilizer from top of door.

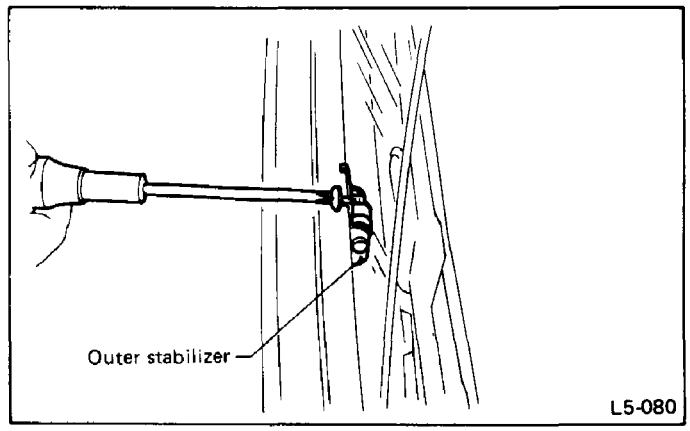

Fig. 20

INSTALLATION

Installation is in the reverse order of removal.

a. To prevent roller stabilizer and glass from chattering, fix inner stabilizer while pressing glass outward.
b. Be careful to keep roller stabilizer clean.
c. Install inner stabilizer so that roller stabilizer is parallel to glass surface.

Tightening torque:
5.4 – 9.3 N·m (0.55 – 0.95 kg-m, 4.0 – 6.9 ft-lb)

Door Glass

REMOVAL

1) Remove trim panel.
2) Remove remote ASSY.
3) Remove sealing cover.
4) Remove rearview mirror from door.
5) Remove outer weatherstrip.
6) Remove inner stabilizer.

For details of above six items, refer to respective descriptions.

7) Loosen upper stopper bolt from the front of door and glass stoppers, and move door glass. Then, remove upper stopper from the rear of door. Remove two bolts which hold glass holder to regulator slider.

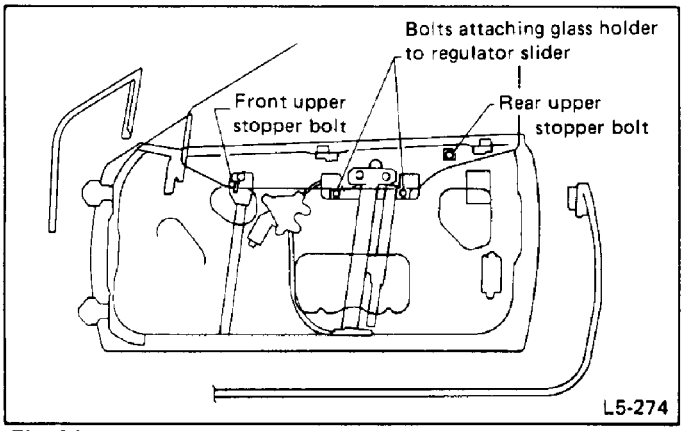

Fig. 21

a. When removing bolts on regulator slider, move glass to position where bolts can be seen through service hole.
b. Mark position and tightening allowance of upper stopper bolts before removal. This will make adjustment after installation easy.

8) Open door, hold door glass with both hands and pull it straight up from door panel.

Do not turn regulator in direction that closes window after door glass has been removed. This will dislocate slider and slider will scratch corner roller.

INSTALLATION

Installation is in the reverse order of removal.

Tightening torque:
Joining regulator slider
5.4 – 9.3 N·m (0.55 – 0.95 kg-m, 4.0 – 6.9 ft-lb)

Put bottom of glass holder on regulator slider properly.

Window Regulator

REMOVAL

1) Remove trim panel.
2) Remove remote ASSY.
3) Remove sealing cover.
4) Remove rearview mirror from door.
5) Remove outer weatherstrip.
6) Remove inner stabilizer.
7) Remove front and rear upper stoppers from door.
8) Remove door glass.
9) Remove wire clip (manual type only).
10) Remove regulator base plate and regulator rail.

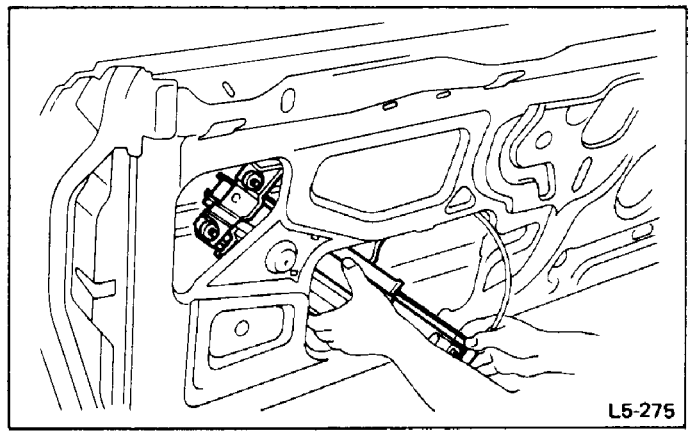

Fig. 22

11) Take out regulator ASSY through service hole in underside of door.

INSPECTION

Make following checks and replace parts if defective.
1) Worn gears.
2) Broken springs.
3) Damage and wear on other component parts.
4) Lubrication of sliding parts.

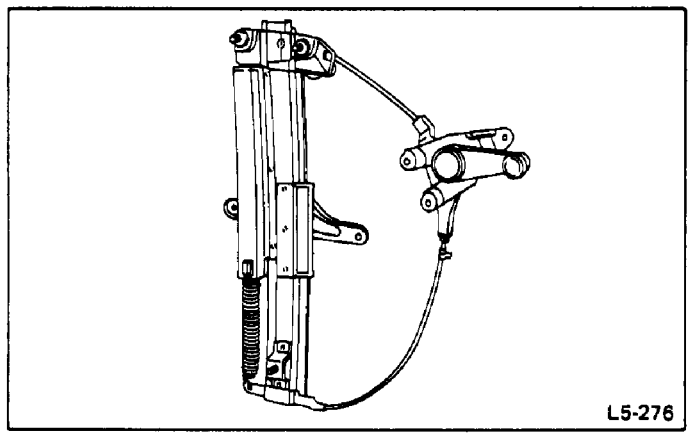

Fig. 23

INSTALLATION

Installation is in the reverse order of removal.
First, fasten base plate with three bolts, and then fasten regulator rail with three bolts.

Tightening torque:
Base plate mounting bolt
5.4 – 9.3 N·m (0.55 – 0.95 kg-m, 4.0 – 6.9 ft-lb)
Rail mounting nut
10 – 18 N·m (1.0 – 1.8 kg-m, 7 – 13 ft-lb)

Gusset

REMOVAL

1) Remove trim panel.
2) Remove speaker.
3) Remove rearview mirror from door.
4) Remove outer weatherstrip.
5) Remove sealing cover.
6) Close window completely.
7) Remove three screws and nut which hold gusset. Swing gusset back with lower adjusting bolt used as a pivot and extract it from access hole.

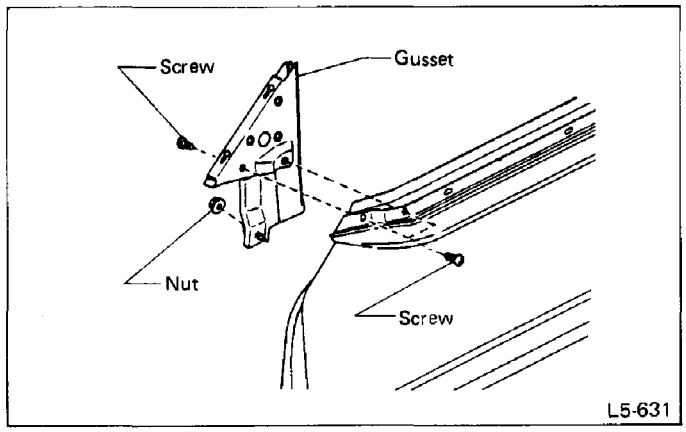

Fig. 24

INSTALLATION

Installation is in reverse order of removal.

Tightening torque:
Screw
5.4 – 9.3 N·m (0.55 – 0.95 kg-m, 4.0 – 6.9 ft-lb)
Nut
10 – 18 N·m (1.0 – 1.8 kg-m, 7 – 13 ft-lb)

Door Sash

REMOVAL

1) Remove trim panel.
2) Remove sealing cover.
3) Remove glass.
4) Remove the nut and bolt which hold door sash.

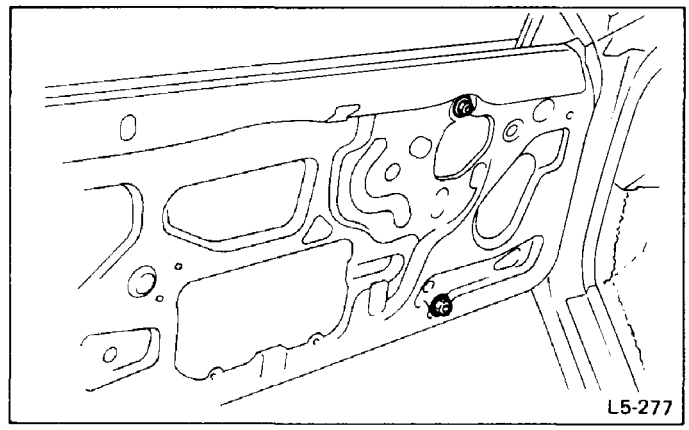

Fig. 25

5) Lift door sash out.

INSTALLATION

Installation is in the reverse order of removal.

Tightening torque:
Upper nut
10 – 18 N·m (1.0 – 1.8 kg-m, 7 – 13 ft-lb)
Lower bolt
5.4 – 9.3 N·m (0.55 – 0.95 kg-m, 4.0 – 6.9 ft-lb)

Glass Stopper

REMOVAL

1) Remove weatherstrip from roof at the retainer location.
2) Remove screws which hold stopper, and detach stopper.

INSTALLATION

Installation is in the reverse order of removal.
Be sure to tighten glass stopper together with retainer.

Tightening torque:
1.7 – 2.6 N·m (0.17 – 0.27 kg-m, 1.2 – 2.0 ft-lb)

Auto-Door Lock Switch

REMOVAL

1) Remove trim panel.
2) Remove sealing cover.
3) Remove remote ASSY.
4) Close window completely.
5) Remove clip from latch. Remove two screws which hold auto-door lock switch, and remove harness clip. The switch can then be extracted through lower access hole.

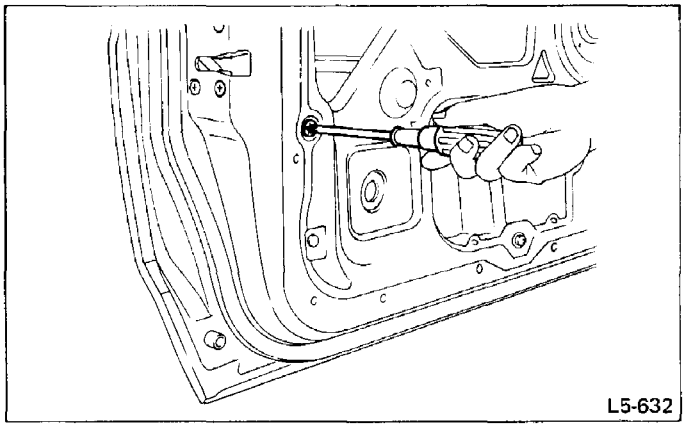

Fig. 26

6) Disconnect switch from harness.

Be careful not to damage harness when extracting switch ASSY.

INSTALLATION

Installation is in reverse order of removal.

Tightening torque:
5.4 – 9.3 N·m (0.55 – 0.95 kg-m, 4.0 – 6.9 ft-lb)

Auto-Door Lock Actuator

INSTALLATION AND REMOVAL

Use the same procedures as for auto-door lock switch.

Door Striker

REMOVAL

Remove door striker by loosening two screws.

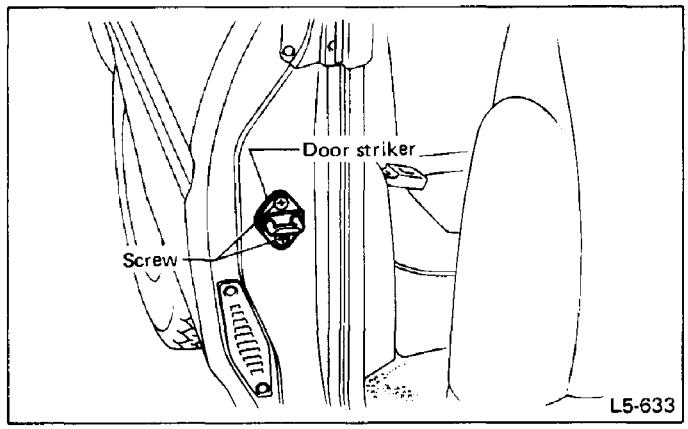

Fig. 27

Tightening torque:
10 – 18 N·m (1.0 – 1.8 kg-m, 7 – 13 ft-lb)

ADJUSTMENT

When door does not fit well or close well at rear end, move striker sideways.

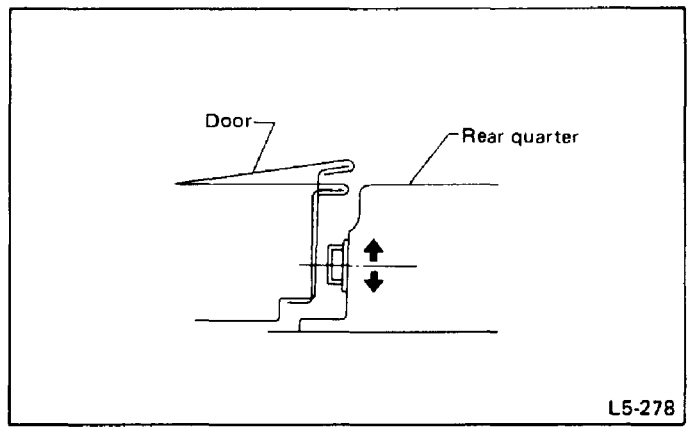

Fig. 28

Door Glass

Construction. . . . . Adjusting Position and Value

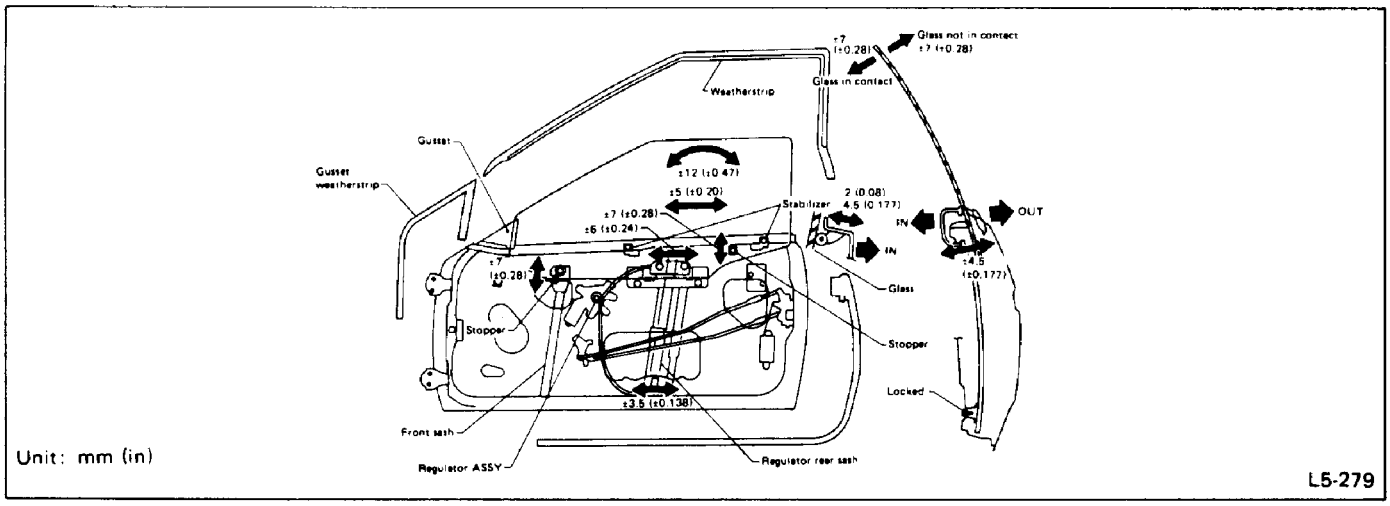

Fig. 29

Door Window Alignment

Before adjusting door window alignment, raise window until weatherstrip at the end of gusset and glass edges are aligned with each other.

Adjusting bolts used for stabilizer, upper stoppers, sashes, etc., should be loosened before window alignment.

1) Temporarily tighten bolt located at the lower end of regulator rear sash in the center of oblong hole on panel.

2) Temporarily tighten one of two bolts used to hold upper end of regulator rear sash at the center of oblong hole on panel. (The other bolt should be loose.)

Bolts used to hold upper and lower ends of front sash should be tight.

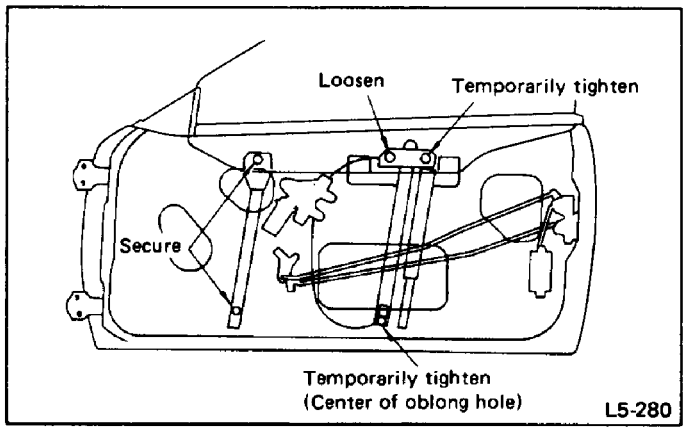

Fig. 30

3) Raise window near the fully-closed position. With the window held in that position, apply a force of approximately 20 N (2 kg, 4 lb) to the upper edge of glass from the inside, contact stabilizer on glass and hold it securely.

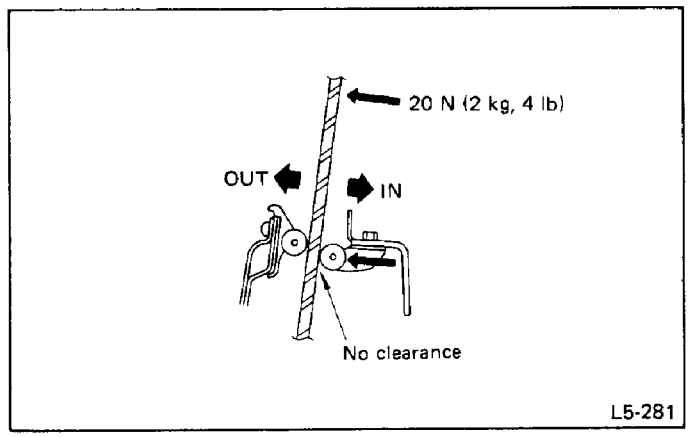

Fig. 31

Be sure there is no clearance between glass and stabilizer. Do not press stabilizer against glass too hard. This will increase the effort required to operate regulator.

Up-down and Fore-aft Adjustment

1) Determine upward travel of window glass. Close door and raise window until glass fits into lips of weatherstrips.

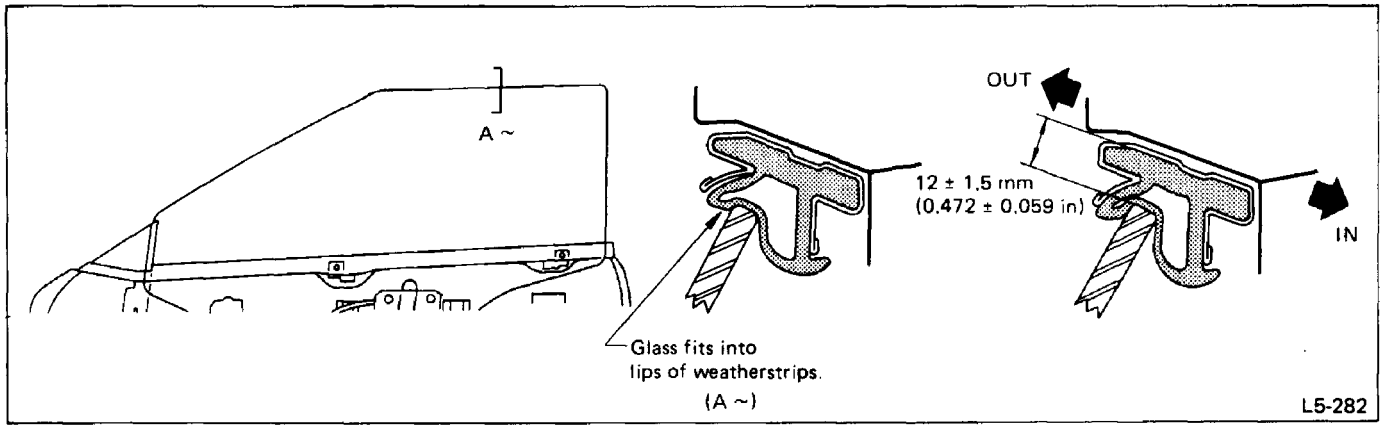

Fig. 32

2) Determine clearances between window glass and body weatherstrips in the fore-and-aft direction.

(1) Move regulator rear sash in either fore or aft direction until glass edge is aligned with weatherstrip on the center pillar side.

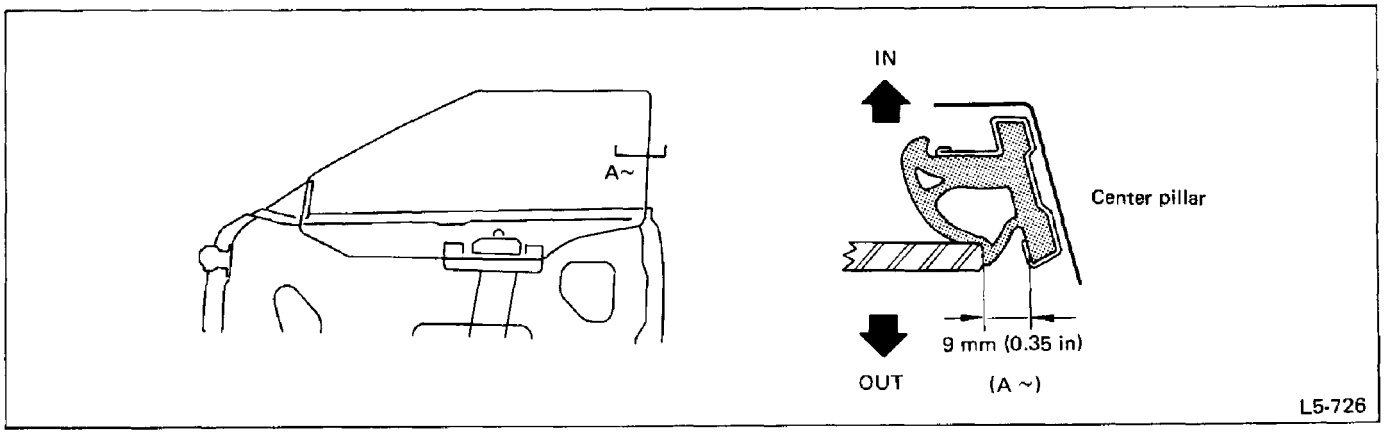

Fig. 33

(2) If it is not aligned properly, proceed to step 3) below.

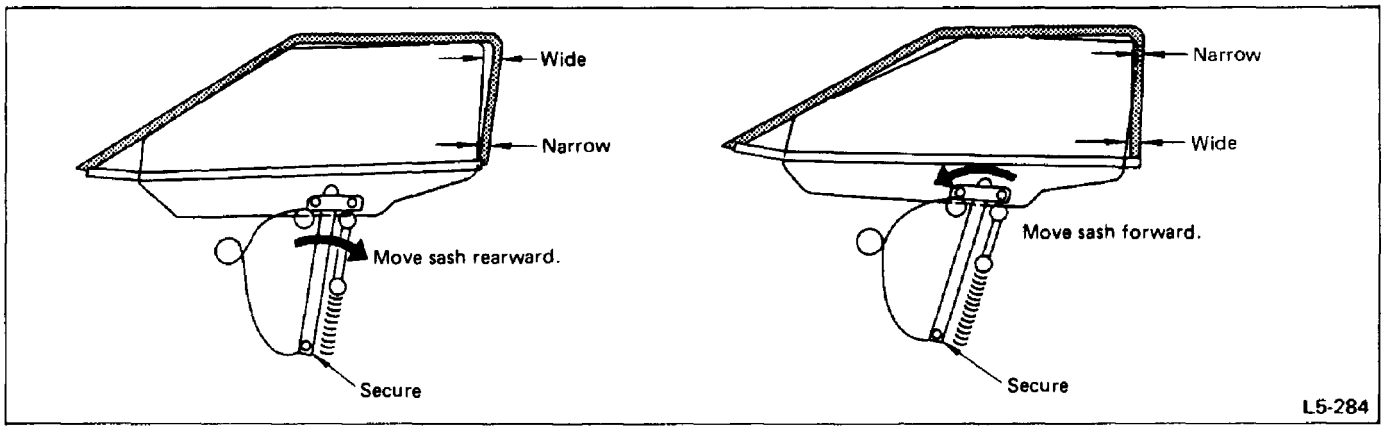

Fig. 34

3) If alignment is not made properly by means of upper adjuster alone, move lower adjuster as required.

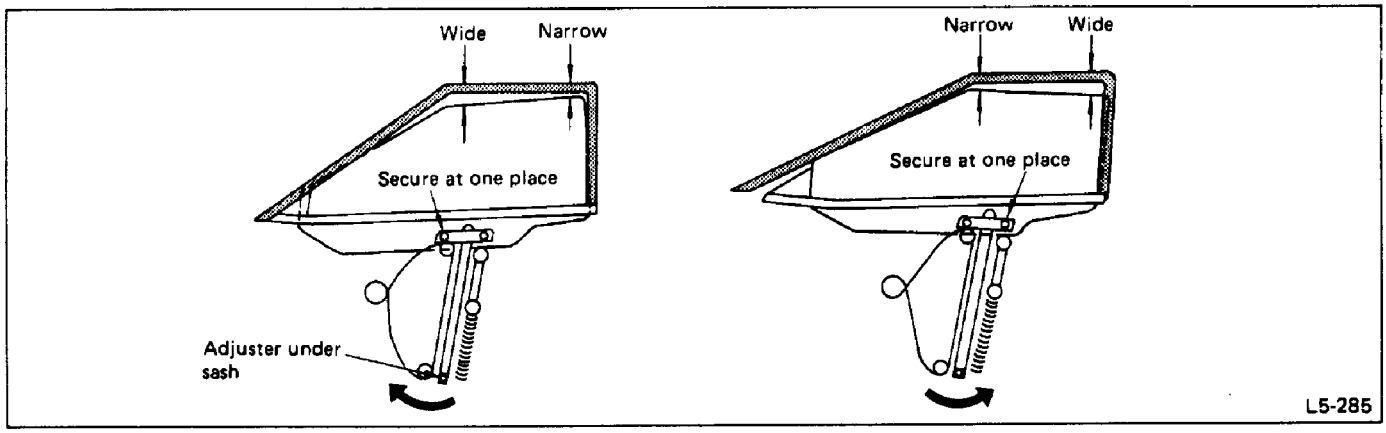

Fig. 35

4) When any of the following problems (shown in figure below) occur even when glass edge is parallel to weatherstrip, move regulator sash forward or backward until alignment is correct.

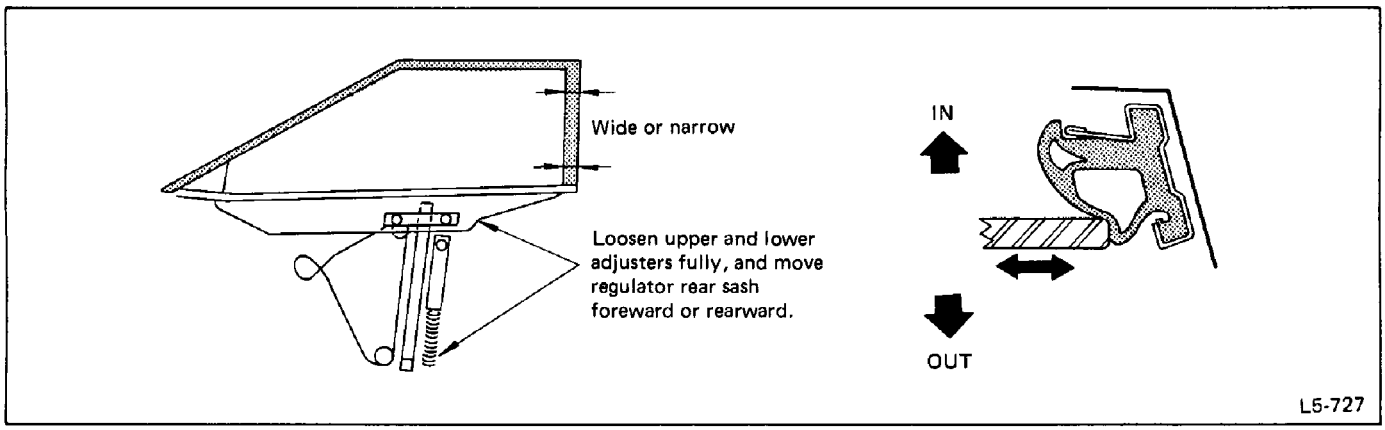

Fig. 36

5) After proper alignment, check to be sure glass edge fits correctly into roof weatherstrip on the front pillar side.

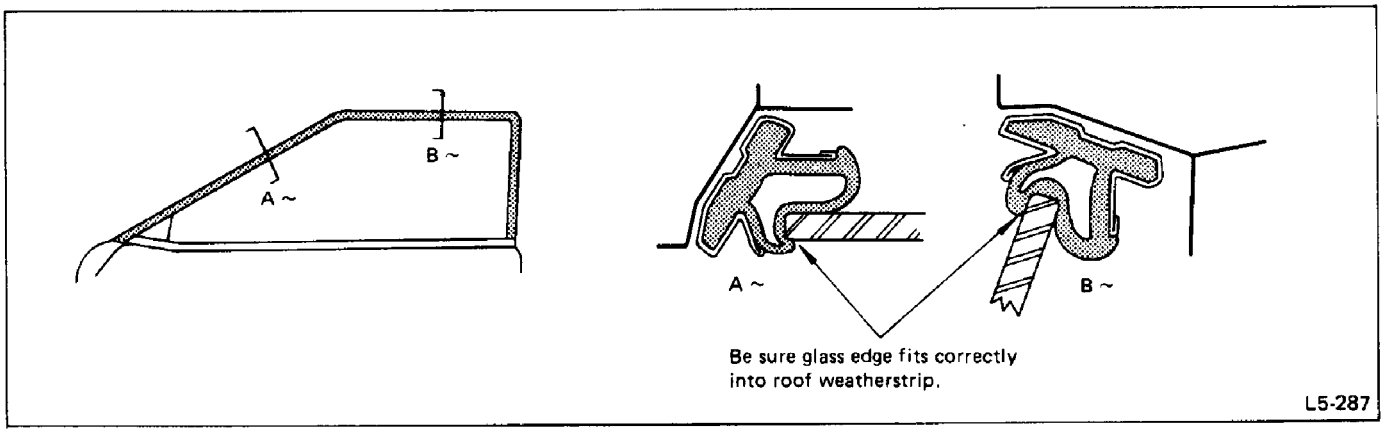

Fig. 37

6) Tighten upper stoppers.

Glass Contact Adjustment

1) Loosen one of two upper adjusting bolts which hold regulator rear sash and adjust glass contact pressure as indicated in figure below. Tighten bolt.

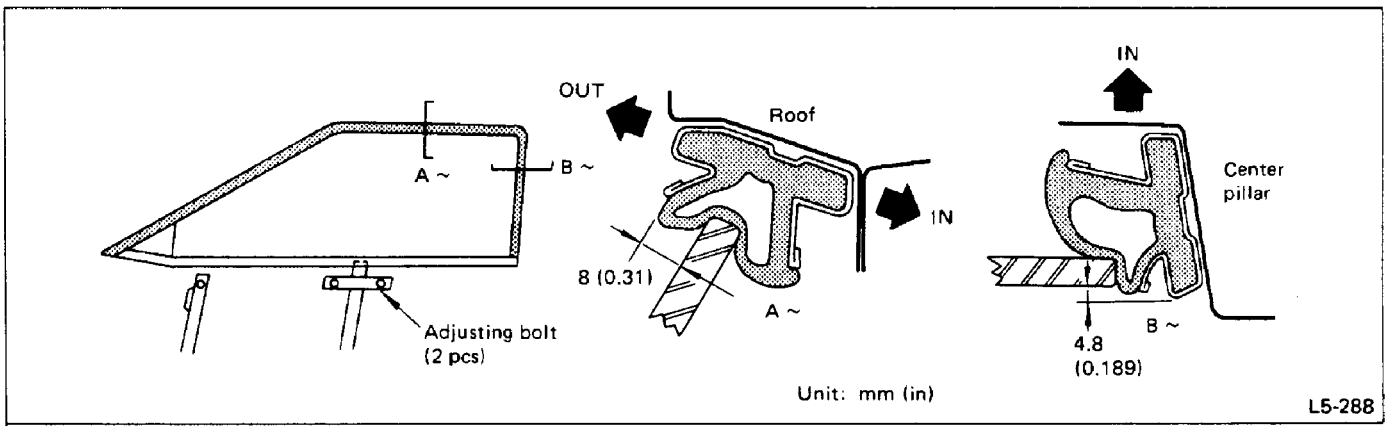

Fig. 38

2) Adjust front sash, using step 1) above as a guide.

Adjustment amount of front and rear sashes is basically the same; however, it may differ slightly due to the way the door is aligned.
It is advisable to adjust both sash bolts as close to the center of holes as possible.

Window Glass

Removal and Installation of Adhesion Type Glass

Procedures of removal and installation

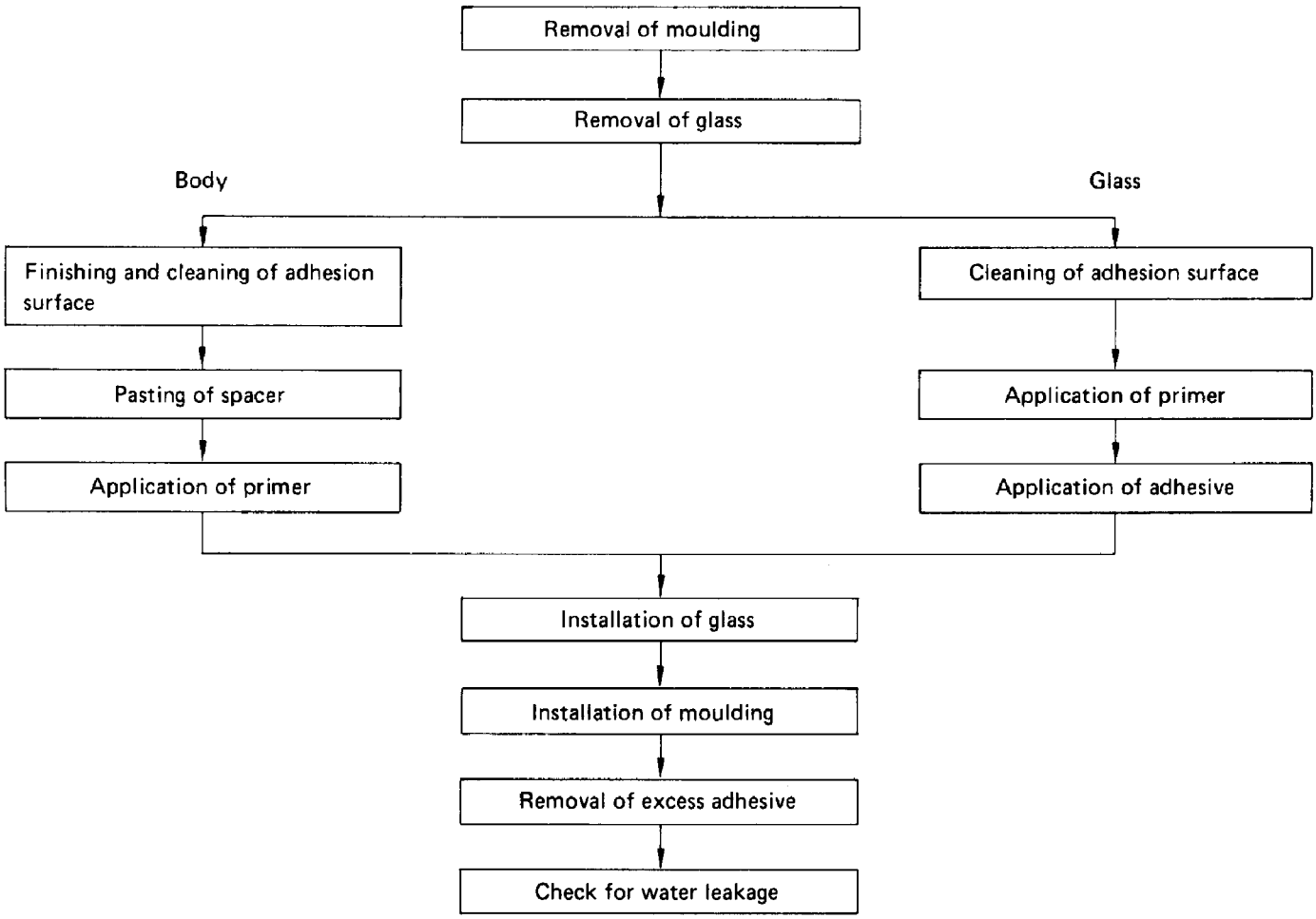

Materials required for application

Description	Remarks
Repair adhesive set • Cartridge of single-liquid urethane adhesive • Primer for glass and body	Sunstar No. 580 or Essex Chemical Corp's Urethane E Sunstar No. 435-580
Windshield knife	For cutting windshield
Sealant gun	For applying adhesive
Suction cups	For holding glass
Putty knife	For finishing adhesion surface and cutting spacer
Sponge	For applying sponge
Gauze or cloth	For cleaning
Alcohol or white gasoline	For cleaning adhesion surface
Tape	For preventing damage to painted surface

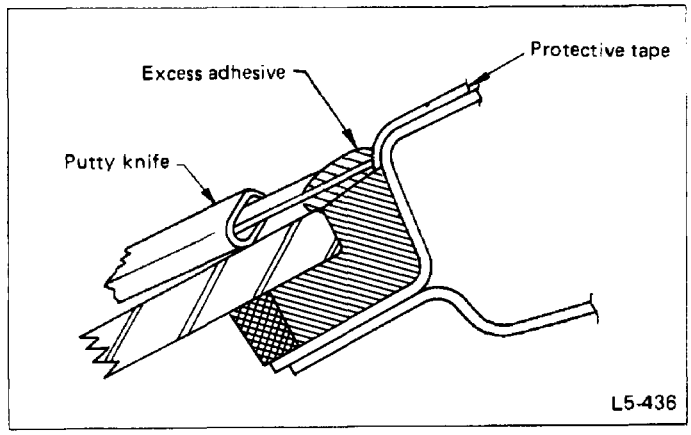

Fig. 39

(4) Cut adhesive layer as shown using putty knife.

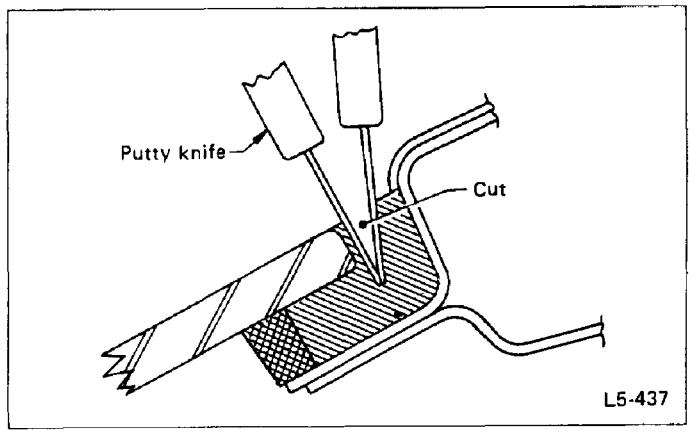

Fig. 40

(5) Remove stopper and spacer (glass).
(6) Put windshield knife into layer of adhesive.
(7) Hold part "a" in one hand, and cut by pulling part "b" parallel to glass while holding knife edge at right angle to glass.

a. Keep knife edge along glass surface and end face.
b. When first putting knife into layer of adhesive, select point with wide gap between body and glass.

Windshield

REMOVAL

USING WINDSHIELD KNIFE:

The following procedure for the front windshield can also be applied to other windshields.

The windshield knife cannot be used on the rear window of the sedan without damaging the surrounding grille. If the grille is not to be damaged, the windshield must be removed by using piano wire.

1) Remove wiper arm.
2) Remove moulding.
3) Remove glass.
   (1) Put protective tape on body to prevent damage.
   (2) Apply soapy water to the surface of the adhesive agent so the knife blade slides smoothly.
   (3) Cut off excess adhesive agent.

USING PIANO WIRE:

1) Remove wiper arm.
2) Remove joints and moulding.

Refer to "USING WINDSHIELD KNIFE".

3) Remove glass.
   (1) Put protective tape on body to prevent damage.
   (2) Using drill or putty knife, make through hole (one place) in adhesive agent.
   (3) Pass piano wire through the hole from inside the compartment, and connect both ends of wire securely to wooden blocks.
   (4) Cut adhesive layer with the wire by pulling it back and forth.

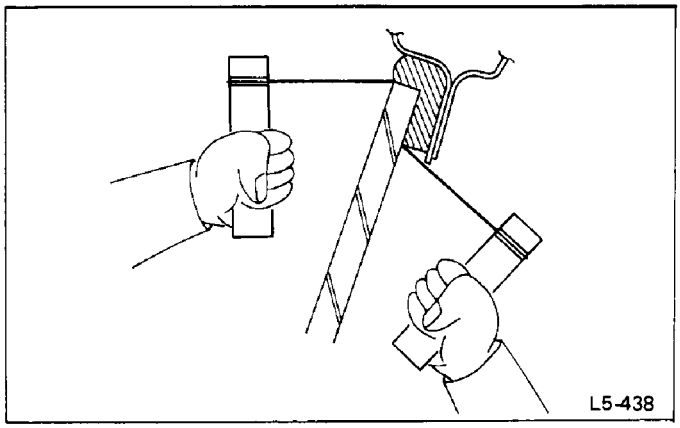

Fig. 41

When making through-hole into adhesive layer and cutting the adhesive, be careful not to damage interior and exterior parts.

INSTALLATION

1) Removing gum rubber and spacer stopper.
   (1) After cutting layer of adhesive, remove remaining gum rubber on body.
   (2) Remove remaining spacer stopper. At this time, also remove two-sided tape from spacer stopper completely.
2) Finishing adhesion surface on body side.

Using a cutter knife, etc., cut layer of adhesive sticking to body and finish it into a smooth surface of about 2 mm (0.08 in) in thickness.

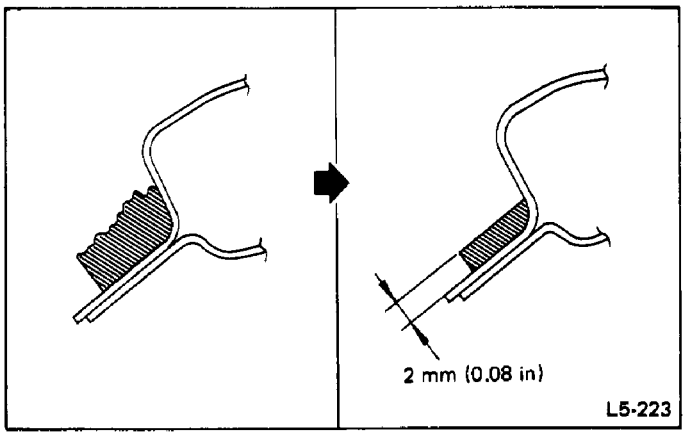

Fig. 42

Take extra care not to cause damage to body paint.

3) Cleaning body surface.
   (1) Thoroughly remove chips, dirt and dust from body surface.
   (2) Clean body wall surface and upper surface of layer of adhesive with a solvent such as alcohol or white gasoline.
4) Pasting spacer stopper.

Put new spacer stopper at places where it was removed.

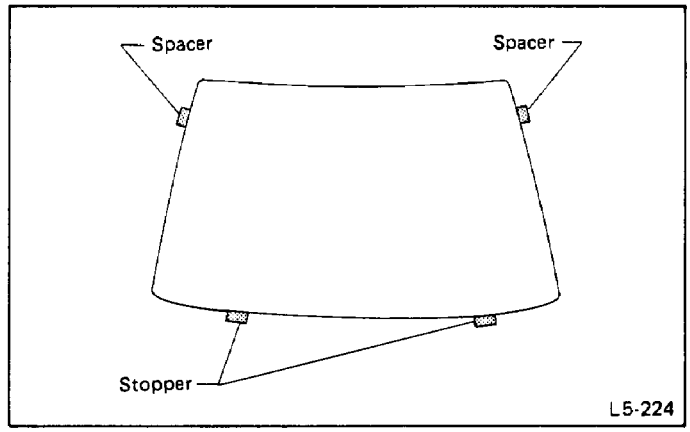

Fig. 43

Remove tack paper from back of spacer stopper and stick it to body positively.

5) Positioning glass.
   (1) Mount glass on body.
   (2) Adjust position of glass so that gap between body and glass is uniform on all sides.
   (3) Put matching mark on body and glass in several places.
6) Cleaning glass.
   (1) Dismount glass from body.
   (2) Clean surface of glass to be adhered with alcohol or white gasoline.
7) Application of primer.
   (1) Using a sponge, apply primer to part of glass to be adhered.
   (2) Apply primer to part of body to be adhered.

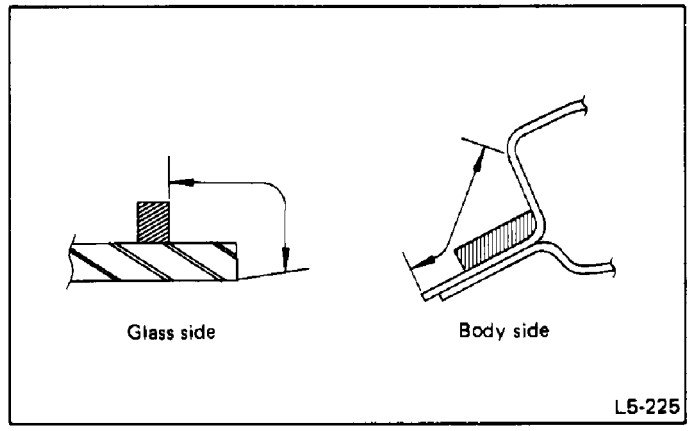

Fig. 44

a. Primer is hard to wipe off body paint, instrument panel, inner trim, etc. if dropped on them. So put masking on them.
b. After application, 1st primer will dry spontaneously for about 10 minutes.
c. Do not touch primer-coated surface under any circumstances.

8) Application of adhesive.
(1) Cut nozzle tip of cartridge as shown in figure below.
(2) Open cartridge and put it into a gun with nozzle attached.
(3) Apply adhesive uniformly to all sides of adhesion surface while operating gun along glass end face.

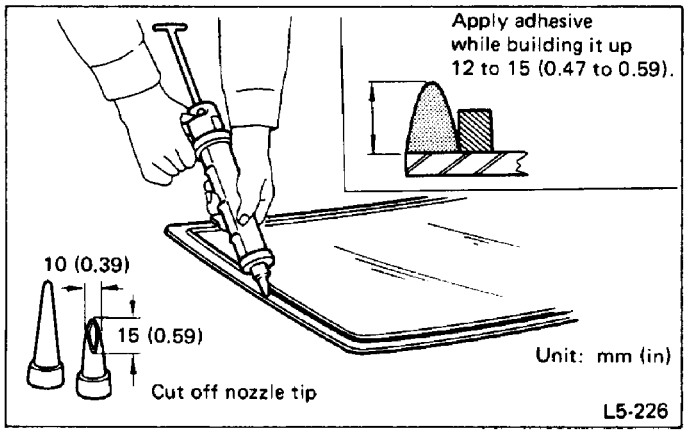

Fig. 45

9) Installation of glass.
(1) Hold glass with rubber suction cups.
(2) Mount glass on body with matching marks aligned.
(3) Stick them fast by pressing all sides lightly.

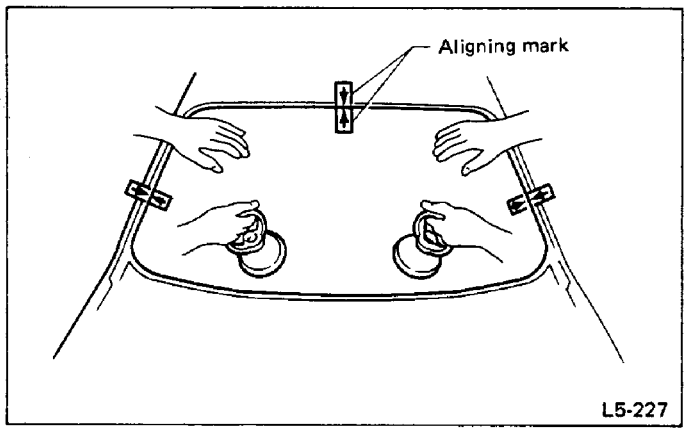

Fig. 46

10) Installation of moulding.
(1) Remove adhesive overflowing outside of glass until it becomes level with outer height of glass. Then, add adhesive to portions that need it.

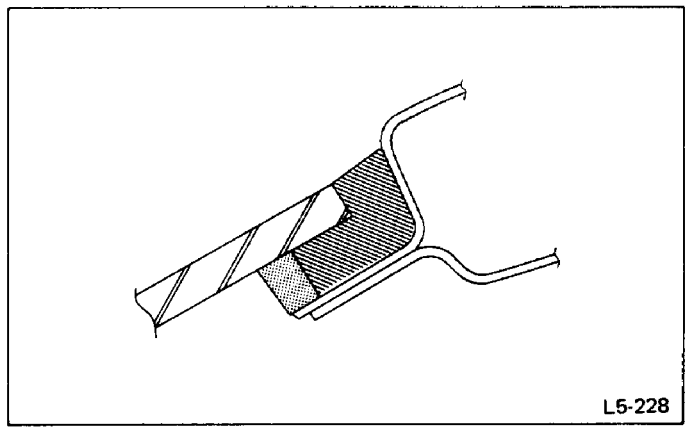

Fig. 47

(2) Insert mouldings into corner parts, and then put them into slits in body.
(3) Press-fit mouldings.
(4) Remove overflowing adhesive with a spatula, and clean with alcohol or white gasoline.

a. Install mouldings with proper facing.

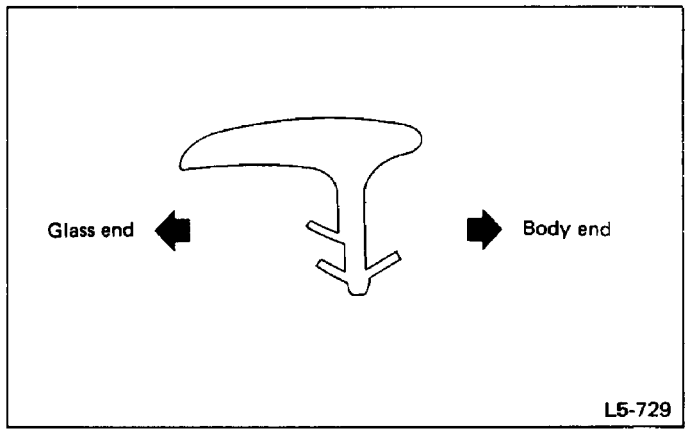

Fig. 49

b. Do not open and close door after mouldings have been installed. When opening and closing door for unavoidable reason, lower door glass and gently move door.

11) Water leakage test.
Test for water leakage about one hour after installation.

a. Move vehicle very gently.
b. Do not squirt strong hose stream on vehicle.

12) Spontaneous drying.
After completing all operations, leave vehicle alone for 24 hours.

When delivering vehicle to user, tell him that vehicle should not be subjected to heavy shocks for at least three days.

13) Install wiper arm.

Rear Window Glass

REMOVAL

1) Remove side upper moulding.
2) Remove side lower moulding.
3) Remove rear pillar cover.
4) Remove upper rear moulding.
5) Remove lower rear moulding.
6) Disconnect terminals of heating wire print.
7) Remove glass in same manner as for windshield.

INSTALLATION

1) Install glass in same manner as for windshield.
2) Install lower rear moulding.
3) Install upper rear moulding.
4) Install rear pillar cover.
5) Install lower side moulding.
6) Install upper side moulding.
7) After installation, test for water leakage after about one hour and leave vehicle alone for 24 hours.
8) Make heating wire print connections.

Always install mouldings and cover immediately after installing window glass.

Rear Quarter Glass

REMOVAL

1) Remove upper side moulding.
2) Remove lower side moulding.
3) Remove drip moulding.
4) Remove rear quarter moulding.
5) Remove center pillar cover.
6) Remove rear pillar cover.
7) Remove rear quarter glass in same manner as for windshield.

INSTALLATION

1) Removal of spacer, etc.
After cutting layer of adhesive, remove remaining spacers and two-sided tape securing them to body.
2) Finishing layer surface of adhesive on body.
Using a cutter knife, etc., cut layer of adhesive stuck firmly to body and finish all sides of layer into plain surface of about 1 mm (0.04 in) in thickness.

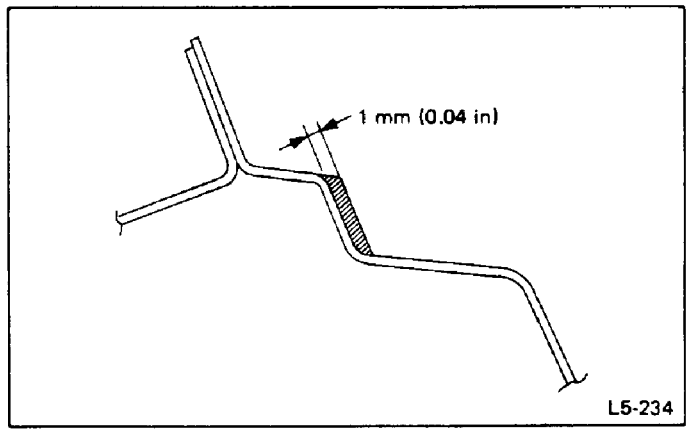

Fig. 50

Work carefully to avoid damaging body coating.

3) Temporary installation of glass.
(1) Apply new spacer and rear quarter glass to see if they can be put in as before.
(2) If they cannot be, this is because there is an overlapping portion. So cut that portion with a putty knife, etc.
4) Cleaning of body surface.
(1) Remove chips, dirt and dust from body surface.
(2) Clean body wall surface and upper surface of layer of adhesive with a solvent such as alcohol or white gasoline.
5) Cleaning of glass.
(1) Remove dirt and dust from surface of glass to be adhered.

(2) Clean surface of glass to be adhered with alcohol or white gasoline.

6) Pasting of spacer.

Put new spacer at places where it was removed.

7) Application of primer.

(1) Using a sponge, apply primer to surface of glass to be adhered.

(2) Likewise, apply primer to area of body to be adhered.

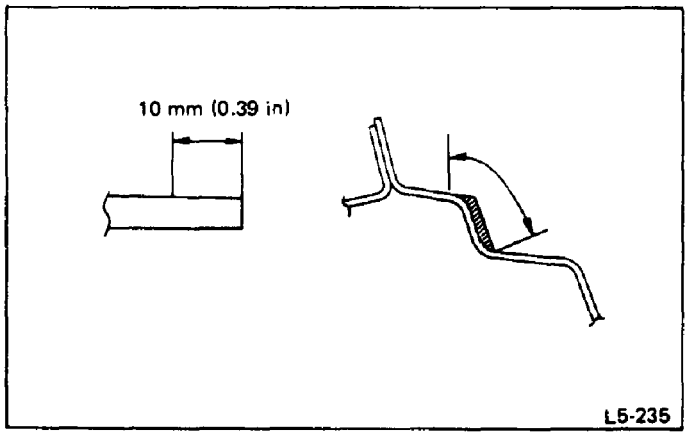

Fig. 51

a. If primer has dropped onto body finish, it is hard to wipe off. So protect with masking.
b. Primer must not project from black frame of glass.
c. After applying primer, let it dry spontaneously for about 10 minutes.
d. Do not touch primer-coated surface under any circumstances.

8) Application of adhesive.

(1) Cut nozzle tip as shown in figure below.

(2) Open cartridge and put it into a gun with nozzle attached.

(3) Apply adhesive uniformly to all sides of adhesion surface while operating gun along glass end face.

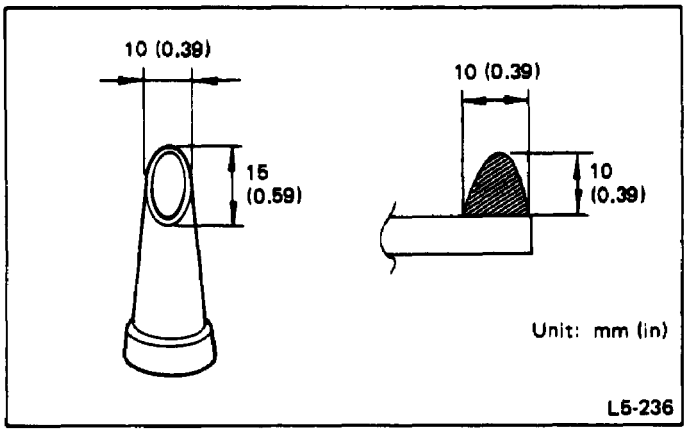

Fig. 52

9) Installation of glass.

(1) Hold glass with rubber suction cups.

(2) Mount glass on body.

(3) Stick them firmly together by lightly pressing down.

10) Water leakage test.

After installing glass, test for water leakage after about one hour.

a. Move vehicle gently.
b. When opening and closing door, lower door glass and move door gently.
c. Do not squirt strong hose stream on vehicle.

11) Spontaneous drying.

After completing all operations, leave vehicle alone for 24 hours.

When delivering vehicle to user, tell him that vehicle should not be subjected to large shocks for at least three days.

12) Install rear pillar cover.
13) Install center pillar cover.
14) Install rear quarter moulding.
15) Install drip moulding.
16) Install lower side moulding.
17) Install upper side moulding.

Always install mouldings and covers immediately after installing window glass.

TROUBLESHOOTING

Door Glass

	Condition	Apparent cause/Correction
Window in fully-closed position	(1) When applying hand pressure to window glass from inside, glass runs out of weatherstrip, especially at upper center pillar location. 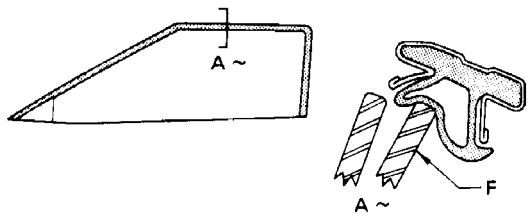 *Fig. 53* L5-289 * Wind noise occurs during high-speed operation if window glass is not properly adjusted.	• Window is too low in relation to roof weatherstrip. (TDC of window glass not properly adjusted.) • Adjust so upper edge of window glass properly fits into weatherstrip lips. * Do not allow window glass to ride over lips when door is opened or closed.
Door in fully closed/open position	(1) Window glass rides over weatherstrip lip. 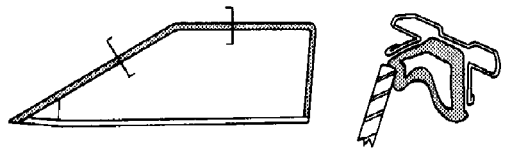 *Fig. 54* L5-290 * Wind noise occurs or water leaks if window glass is not properly adjusted.	• Window glass is too high in relation to roof weatherstrip. (TDC of window glass not properly adjusted.) • Adjust so upper edge of window glass properly fits into weatherstrip. Also adjust fore-aft clearances of glass in relation to body weatherstrips. * Window glass should not be lowered to the point that it does not contact weatherstrip.
	(2) Window glass rides over edges of weatherstrip (on the center pillar side) when door is opened or closed. It also should not contact retainer. 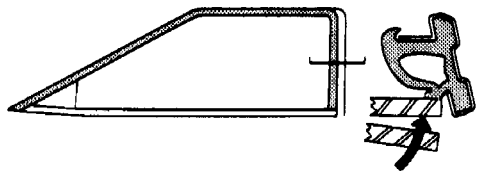 *Fig. 55* L5-291 * Wind noise occurs or water leaks if window glass is not properly adjusted.	• Window glass clearances in the fore-aft direction are not adjusted equally. • Move window glass forward, as required. * Do not allow front edge of window glass to ride over weatherstrip.
When window is raised or lowered	(2) Regulator does not move smoothly.	• Stabilizer pressure against window glass is excessive or regulator is preset improperly. • Adjust so there is no clearance between window glass and stabilizer. • Reduce contact pressure.

Door Lock System

No.	Trouble	Possible cause	Remedy
1	Door cannot be opened by outer handle or outer handle flap does not return to its original position (Door can be opened by inner handle)	Excessive play of outer handle rod. 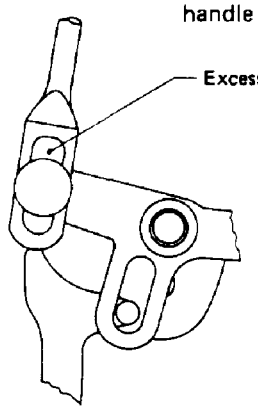 *Fig. 56* L5-237	Adjust play of rod to 0.5 to 1 mm (0.020 to 0.039 in) by turning adjusting nut in or out.
2	Door cannot be opened by inner handle (Door can be opened by outer handle)	a. Joint of lower rod is loose.	Retighten firmly. Functionally normal.
3	Door does not open when outer or inner handle is operated with inner lock knob set to unlock position	a. Joint of upper rod is disconnected. 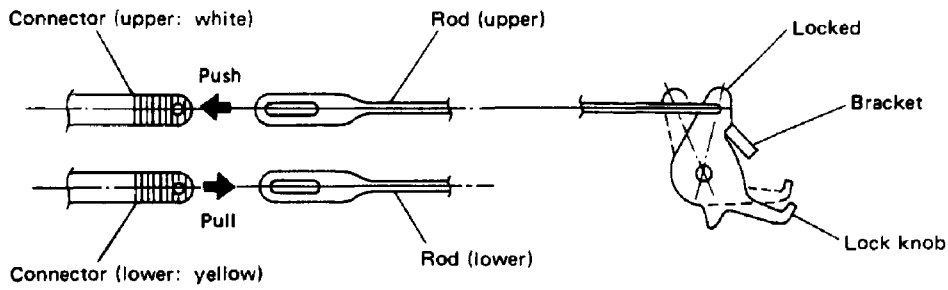 L5-293 *Fig. 57*	Loosen screw linking upper rod, pull forward connector with latch, and install rod with lock knob butting against stopper (red label cannot be seen). (See Fig. 58.)
		b. Lock is not released due to improper adjustment of upper rod (red can be seen large in locked state).	Positively link joint in above manner. (See Fig. 58.)

No.	Trouble	Possible cause	Remedy
3	Door does not open when outer or inner handle is operated with inner lock knob set to unlock position	c. Lock is not released due to outer handle rod pressing down lever. 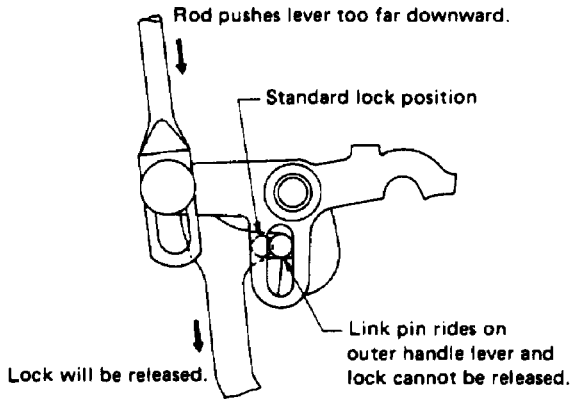 *Fig. 58* L5-239	
4	Door opens even when inner lock knob is set to lock position (Keyless locking is impossible)	a. Upper rod joint is separated. b. Door is not locked due to improper adjustment.	Same as a in No. 3. (See Fig. 58.) Same as b in No. 3. (See Fig. 58.)
5	Locking and unlocking of inner remote is not smooth.	Contact of lock knob with inner remote mounting bracket. 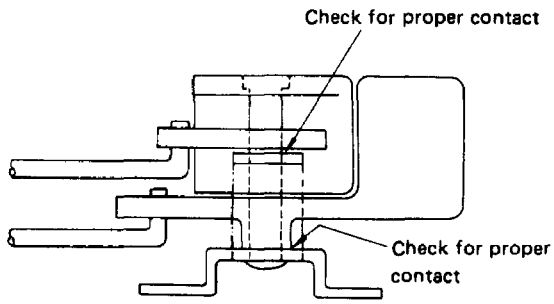 L5-294 *Fig. 59*	Eliminate contact by bending bracket or applying oil.
6	Inner handle stops halfway	Contact of inner handle with inner remote mounting bracket.	Apply oil or replace faulty part.

SEATS, SEAT BELTS, AND INTERIOR

5-3

SUBARU

1988

	Page
MECHANISM AND FUNCTION	2
Front Seat	2
Rear Seat	4
Seat Belts	5
Inner Trim	8
COMPONENT PARTS	9
Front Seat	9
Rear Seat	9
Seat Belts	10
Inner Accessories	11
Inner Trim	11
SERVICE PROCEDURE	12
Front Seat	12
Rear Seat	12
Trim Cushion And Trim Back	13
Seat Belts	14
Console Box	18
Inner Trim	19
TROUBLESHOOTING	24

MECHANISM AND FUNCTION

All seats are designed for improved riding comfort. The driver's seat can be precisely adjusted to provide the optimum driving position.

Front Seat

SEAT SLIDING

When the slide adjuster lever is turned, the slide rail lock is released. The front seat can then be moved 190 mm (7.48 in) in the fore-and-aft direction [13 positions at a pitch of 16 mm (0.63 in)].

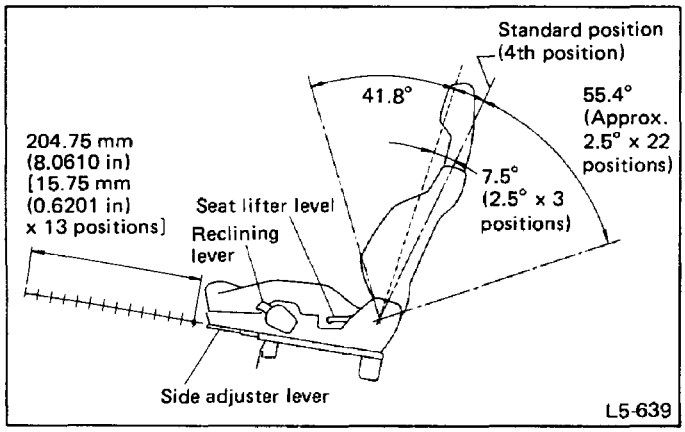

Fig. 1

SEAT RECLINING

When the reclining lever is moved up, the reclining hinge lock is released. The seat backrest can be adjusted every 2°30′, and also folded fully forward.

SEAT LIFTER

When the lifter adjustment lever is extended and rotated, the lifter brake is released. The seat can be precisely adjusted to the desired height within a range of 40 mm (1.57 in).

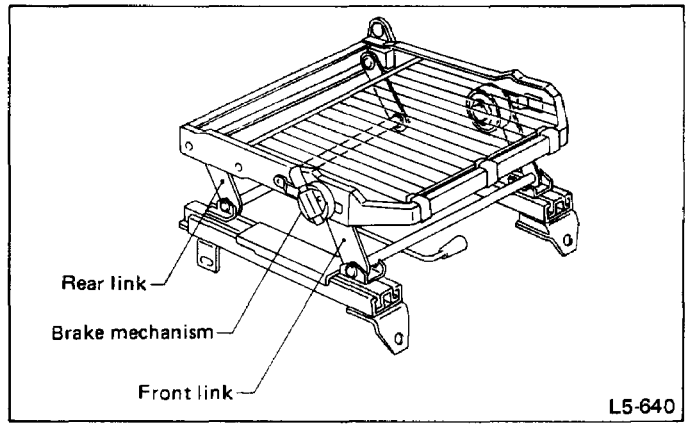

Fig. 2

Mechanism

When the adjustment lever is extended and moved up, the pinion, interconnected with the lever, will move in direction A. This causes the sector gear to rotate in direction B, so that the front link is lifted in direction C. The rear link also is lifted, along with the front link, in direction D. As a result, the entire seat cushion moves up. The brake lock mechanism, which is built into the rotary shaft section of the adjustment lever, has the same design as the window regulator in order to securely hold the cushion in place.

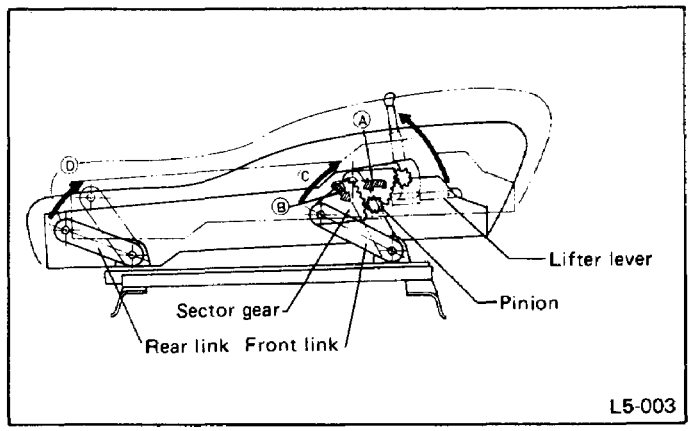

Fig. 3

LUMBAR SUPPORT

The lumbar support adjustment lever can set the loin supporting section of the seatback to any of four positions in the fore-and-aft direction.

WALK-IN SYSTEM

When getting in or out of rear seat, front seat can be moved to the forwardmost position as follows:
Depress pedal or lift reclining hinge lever to tilt backrest forward. Wire cable connecting reclining hinge will then release slide rail lock so that seat moves forward by helper spring.

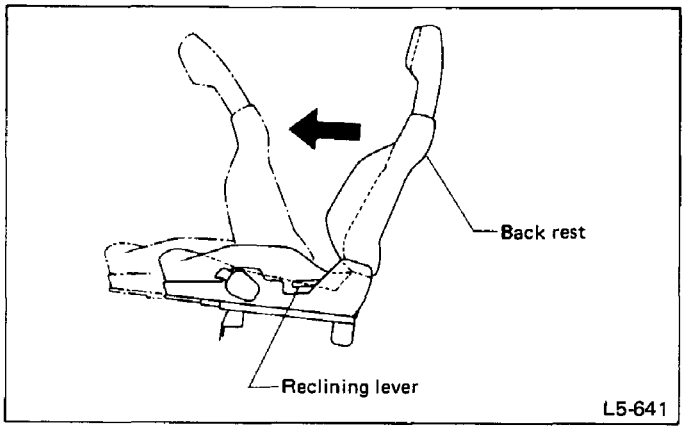

Fig. 4

HEADREST FORE-AND-AFT ADJUSTMENT (XT-6 model only)

To adjust the headrest, hold it with both hands. Move it in the fore-and-aft direction and release it at the desired position. The headrest will lock in that position.

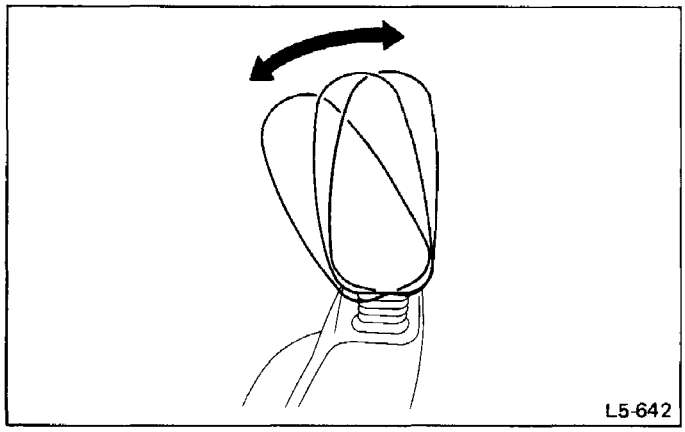

Fig. 5

REMOVAL AND INSTALLATION OF HEADREST (Exc. XT-6 model)

To remove the headrest, lightly turn lock release knob (counterclockwise) located on the upper left side of the seat backrest and lift out headrest.
To install, align headrest stays with the holes in the backrest and push headrest in firmly.

When turning lock release knob, be careful not to damage the seat cover.

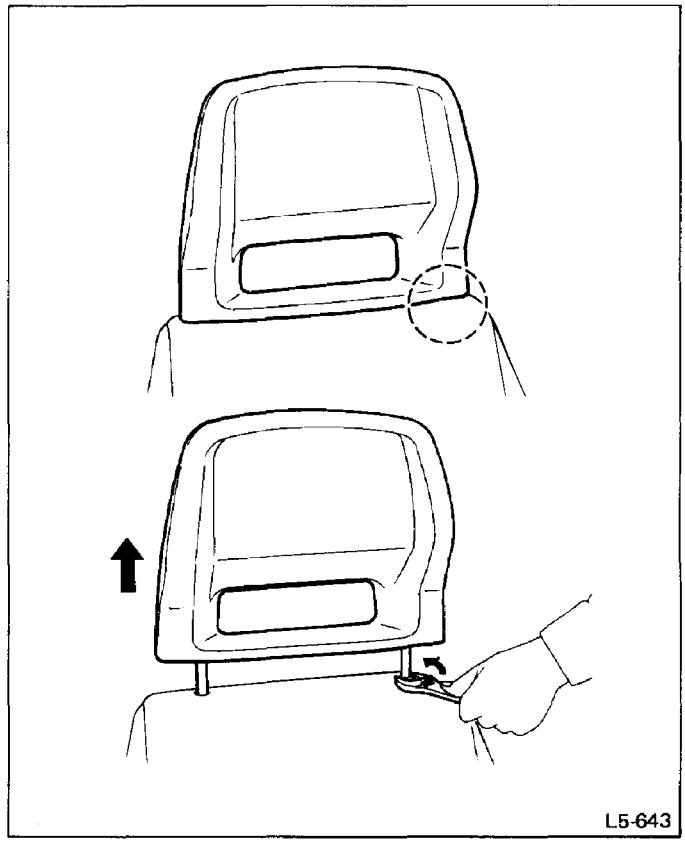

Fig. 6

(XT-6 model)

To remove the headrest, lightly turn lock release knob (counterclockwise) located on the upper left side of the seat backrest and lift out headrest. The lock release knob is able to be seen after lifting the left bellows (as viewed from the rear of the car).

To install the headrest, align headrest stays with the hole and push headrest in firmly.

When turning lock release knob, be careful not to damage the seat cover.

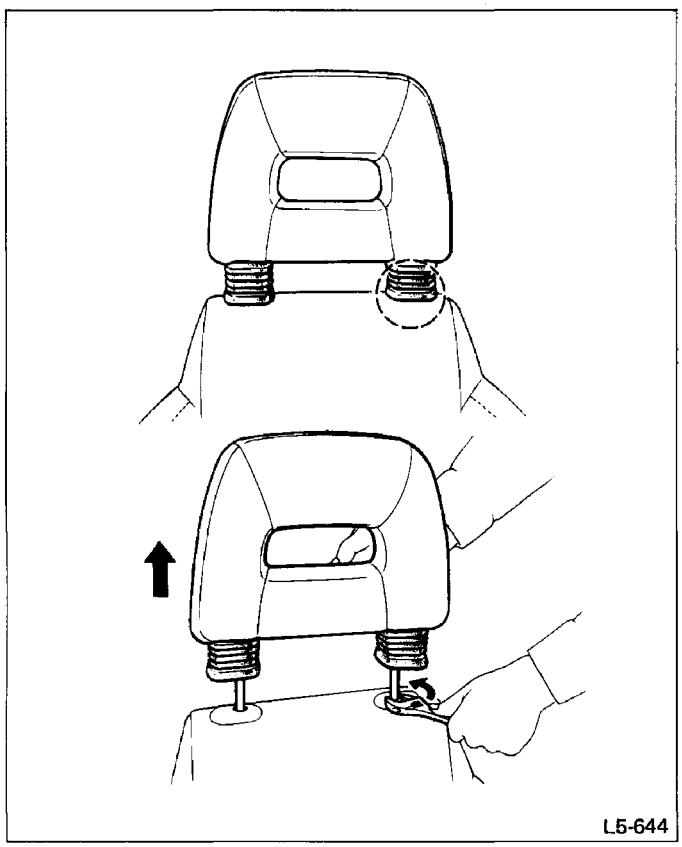

Fig. 7

Rear Seat

FOLDABLE BENCH SEAT

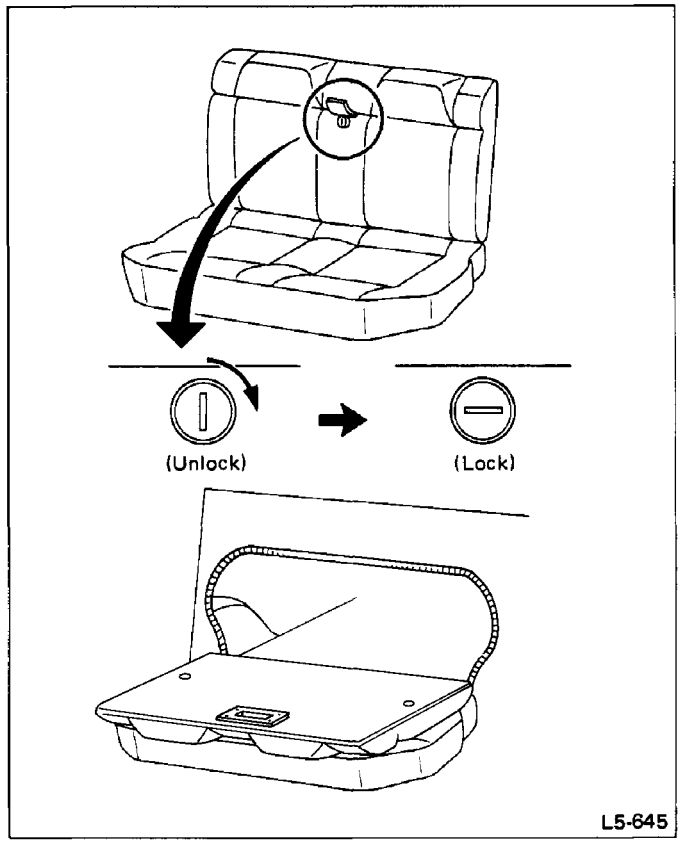

Fig. 8

Operation

1) Unlock key located under strap and pull strap. Backrest will then tilt forward.

Seat Belts

Front Seat Belt

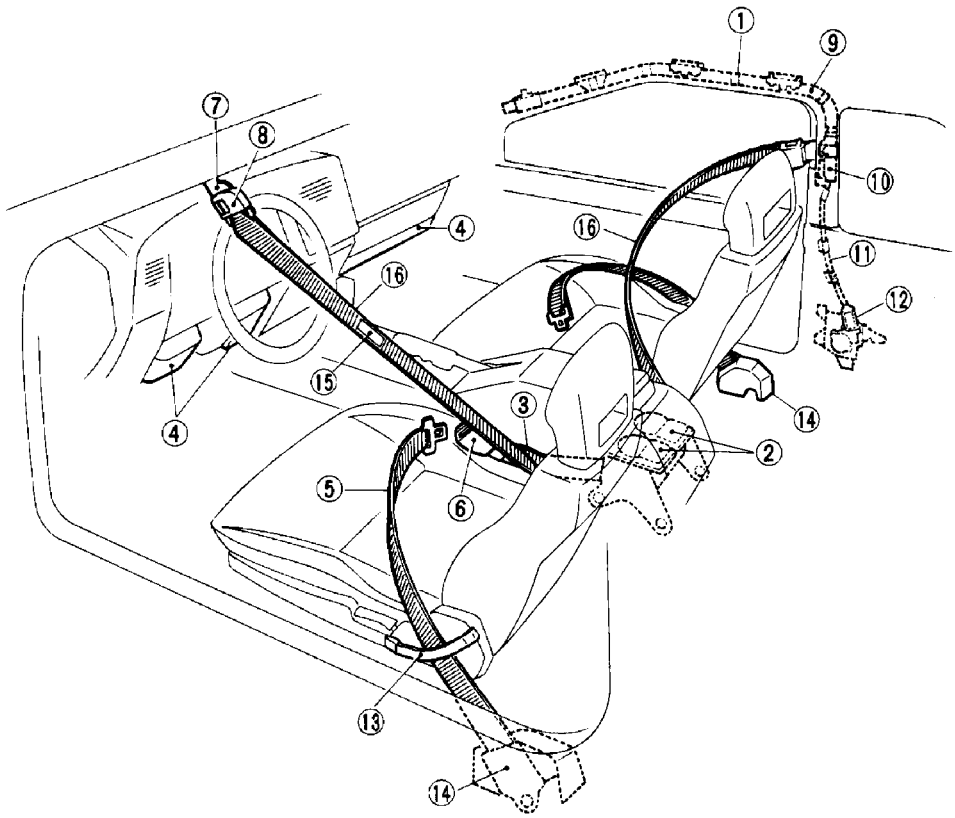

Fig. 9

Features

The front seat is equipped with an automatic shoulder belt system and a manual lap belt.

AUTOMATIC SHOULDER BELT SYSTEM

1) Rail & motor ASSY

This system consists of a shoulder anchor, guide rail and motor ASSY.

(1) Shoulder anchor

The shoulder anchor is united with an ERB (Emergency Release Buckle). It is securely latched to the shoulder belt tongue and allows the tongue to move along the guide rail.

(2) Guide rail

The guide rail allows the shoulder anchor to move along the track on the front pillar, side rail and center pillar.

(3) Motor ASSY

The motor ASSY winds or unwinds the wire moving along the guide rail which moves the shoulder anchor.

2) ELR (Emergency Locking Retractor) ASSY

The ELR's used on the driver and passenger seats are combined. They are located on the upper side of the floor tunnel in front of the rear seat cushion. The belts extracted from the ELR's turn at the belt guide and latch on the ERB (Emergency Release Buckle). These belts are used as shoulder belts.

3) Belt guide

The belt guide is secured to the slide rail between the driver and passenger seats, on the floor tunnel. The belt extracted from the ELR turns at the belt guide and restrains the upper body of the driver or passenger at a fixed position, regardless of physique and seating position.

The shoulder belt fits the occupant when pulled to the center pillar although it appears to be twisted when moved to the center pillar.

MANUAL LAP BELT

1) Outer belt ASSY

The belt extracted from the ELR (located below the center pillar) is secured by the belt holder close to the seat hinge cover. It is within easy reach, regardless of the seating position.

2) Inner belt ASSY
The inner belt ASSY is parallel to the belt guide. Its buckle is secured in a fixed position, regardless of physique and seating position.

Others

1) Knee panel
The knee panel is located below the instrument panel. It restrains the lower body of the driver and passenger in a front-end collision.

2) Submarine-preventing material (incorporated in passenger seat cushion)
Unlike the driver's seat, the position of the passenger seat can be optionally selected. (In other words, the passenger is less restrained than the driver.) As a result, the distance between the passenger's knee and knee panel is not constant. For this reason, submarine-preventing material is incorporated in the front edge of the passenger seat cushion to help increase the effect of the knee panel.

Operation

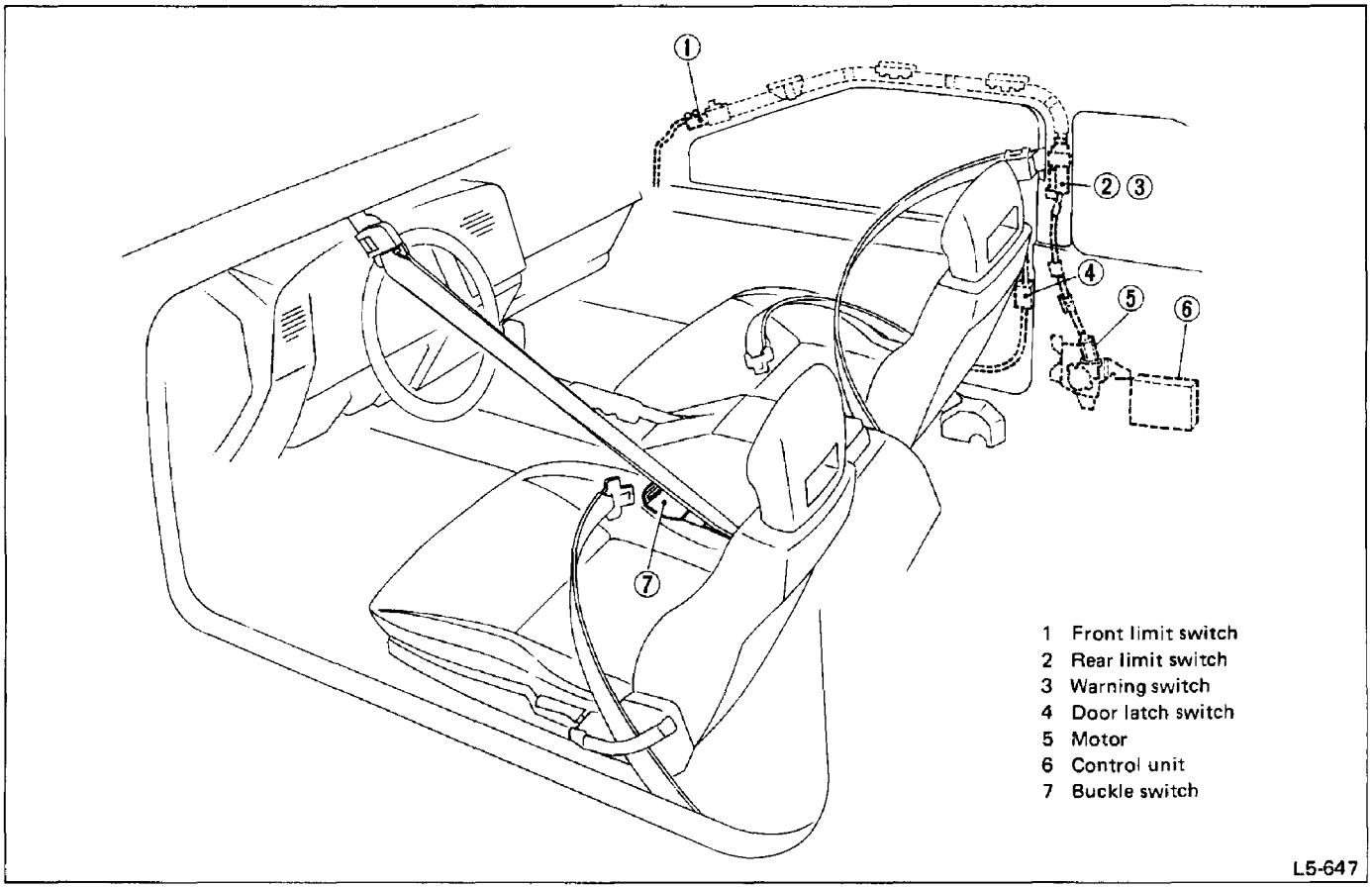

Fig. 10

The automatic shoulder belts (for the driver and passenger) are controlled by a control unit located behind the motor ASSY under the lower part of the right hand side rear quarter section.
These belts operate in response to the opening/closing of the corresponding doors.
When the door is closed, the shoulder anchor moves to the extreme end of the center pillar guide rail. It stops and locks there (Fig. 11). When the door is opened, the door lock switch turns from CLOSED to OPEN, turning relay L1 ON.

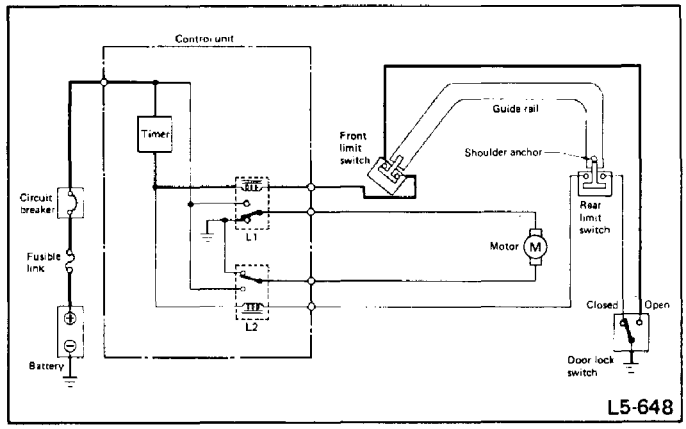

Fig. 11

The motor then rotates so that the shoulder anchor moves to the front (Fig. 12). When the shoulder anchor reaches the front end, the front limit switch turns from CLOSED to OPEN, turning relay L1 OFF and stopping the motor (Fig. 13).

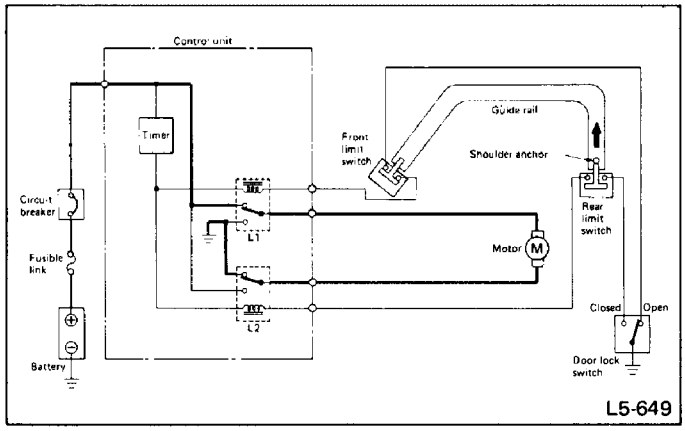

Fig. 12

When the door is closed, the door lock switch turns from OPEN to CLOSED, turning relay L2 ON.

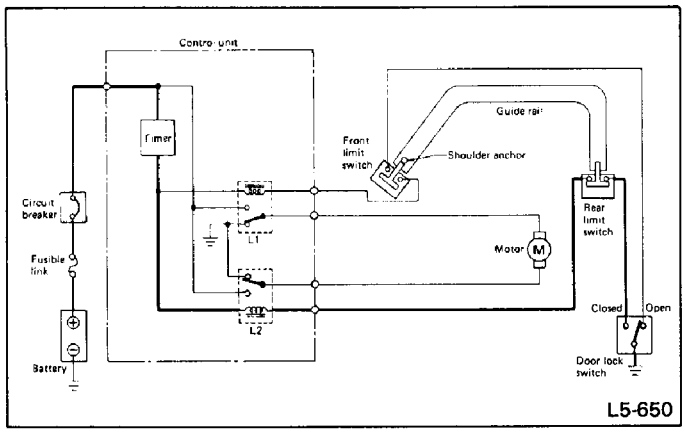

Fig. 13

The motor then rotates so that the shoulder anchor moves to the rear (Fig. 14). When the shoulder anchor reaches the rear, the rear limit switch turns from CLOSED to OPEN, turning relay L2 OFF and stopping the motor (Fig. 11).

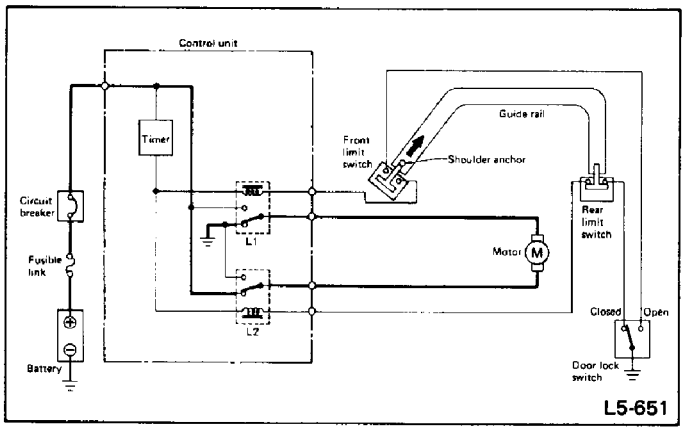

Fig. 14

If the door is closed before the shoulder anchor reaches the front end or if the door is opened before the anchor reaches the rear end, the door lock switch turns from OPEN to CLOSED or from CLOSED to OPEN. This alternately turns relays L1 and L2 ON and OFF, moving the shoulder anchor in the corresponding direction. Time required for the shoulder anchor to move from one end to the other is approximately 2 seconds.

Motor & Wire Protection Circuit

A circuit breaker and timer are used to protect the automatic shoulder belt system circuit from damage.

If the shoulder anchor sticks for more than 13 seconds, current flowing to the motor will be interrupted. However, it can be corrected by opening and closing the door. If the motor overloads, the circuit breaker activates immediately to interrupt the current, protecting the motor against damage.

The circuit breaker automatically resets as soon the overload is eliminated. Basically, the timer activates before the circuit breaker does.

Rear Seat Belt

Two rear seat belts are installed. These seat belts are 2-point hitch type and equipped with an ALR (Automatic Locking Retractor).

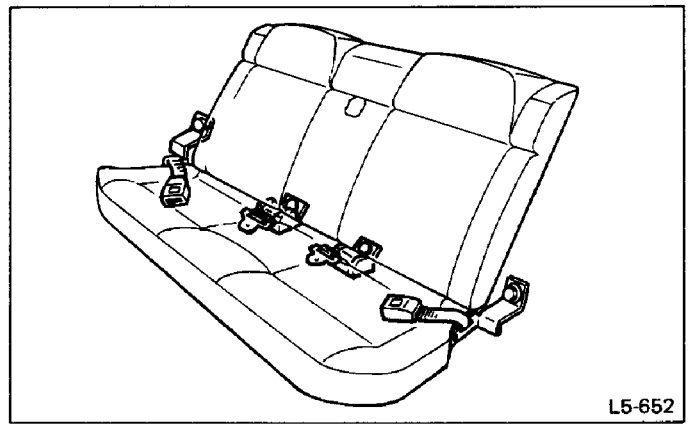

Fig. 15

Inner Trim

Door Trim

The front and rear door trims are made up of formed core materials at the window shoulder location with soft formed covering materials pasted over the core material. Trims used in other areas consist of a board, cushion and covering material pasted. The covering material used with trims is either chloride vinyl, tricot or moquett, depending on the specifications. Some lower trims are equipped with carpets.

Trim Panel and Side Sill Cover

1) The trim panel and side sill cover is a polypropylene, injection-molded type to provide a fresh appearance.
2) A sealing material is installed on the front and rear pillars to improve noise-proofing.

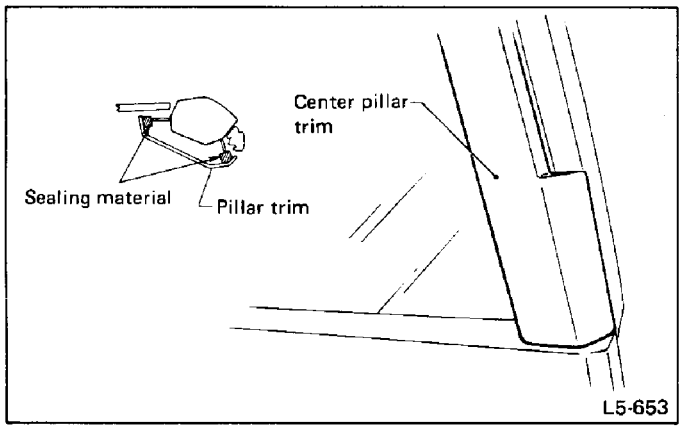

Fig. 16

3) Urethane material is installed around the rear surface to prevent booming noise and entrance of dust and dirt. An insulator is also used, depending on the specifications.
4) The covering material used for the roof trim is tricot to provide a good outward appearance.

Floor Mat

The front and rear floor mats are a one-piece, wall-to-wall type, which have a noise and heat-insulator on the back side. Foamed chloride vinyl mat, needle punch carpet, and cut-pile carpet are also available for installation, depending on the specifications.

COMPONENT PARTS

Front Seat

1 Headrest
2 Backrest
3 Lumbar support knob
4 Reclining lever
5 Hinge cover
6 Slide rail ASSY
7 Bolt cover
8 Rail cap
9 Hinge ASSY
10 Cushion
11 Seat lifter lever
12 Lifter lever cover
13 Belt guide
14 Inner belt ASSY
15 Hinge protector
16 Belt holder
17 Belt holder cap
18 Belt stopper
19 Seat anchor cover

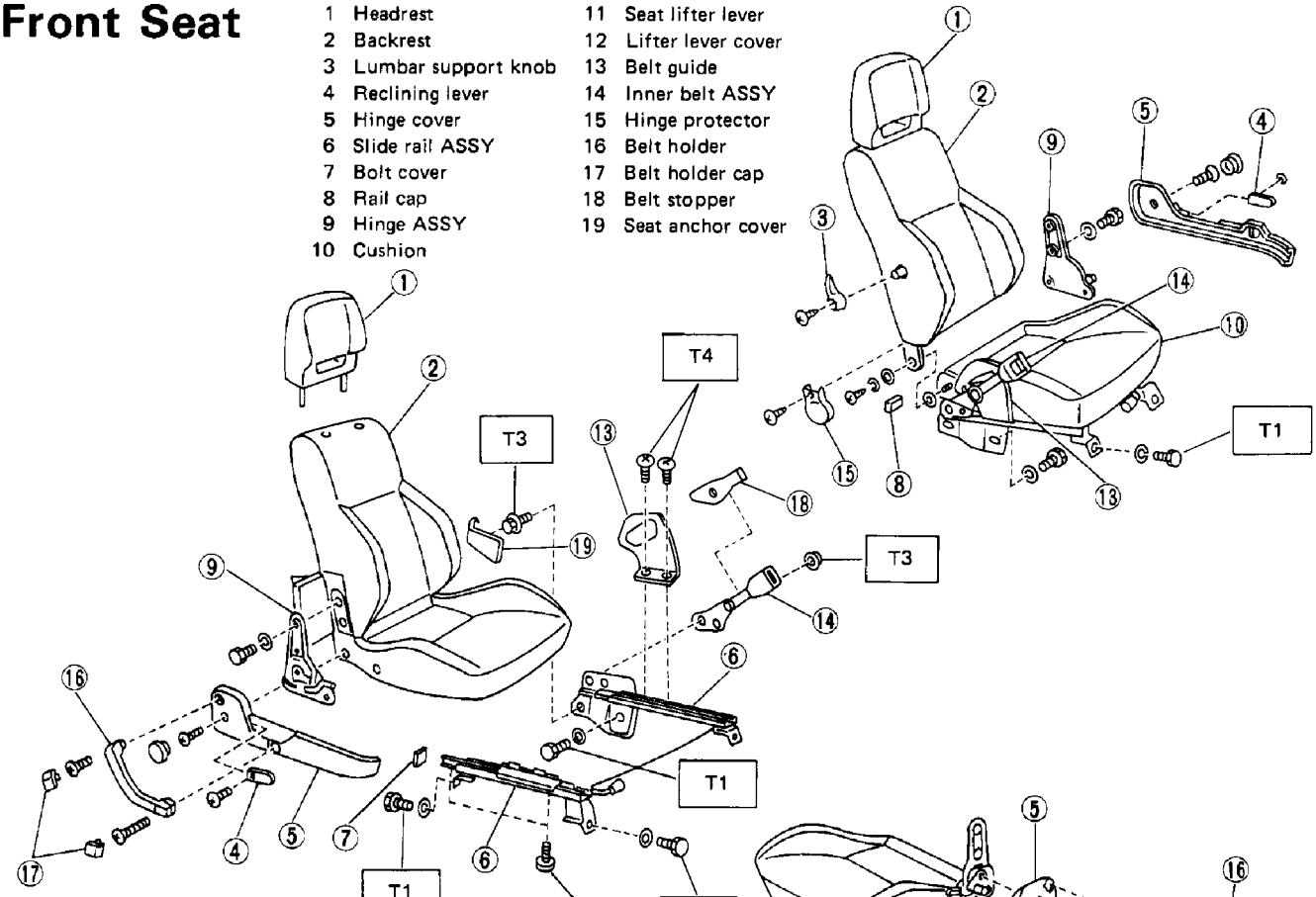

Rear Seat

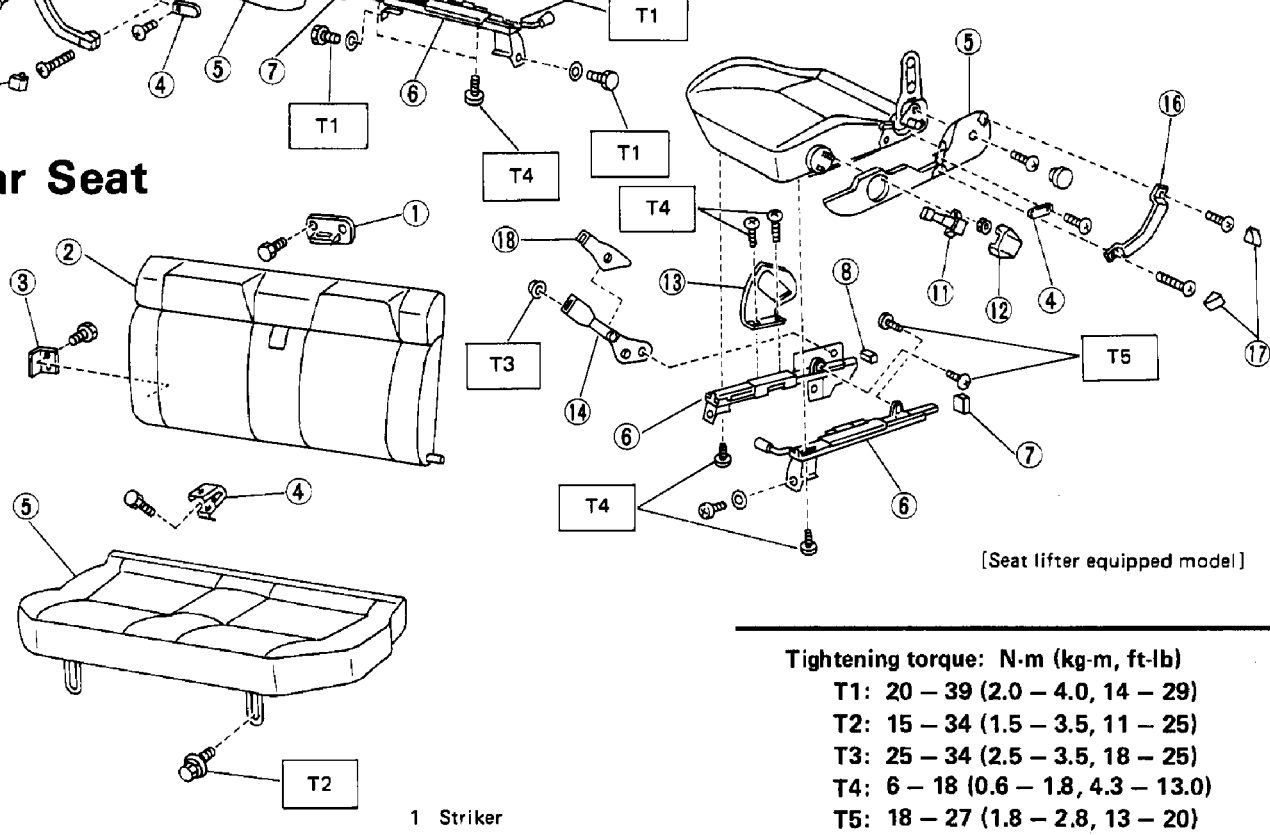

[Seat lifter equipped model]

1 Striker
2 Backrest
3 Hinge
4 Center bracket
5 Cushion

Tightening torque: N·m (kg-m, ft-lb)
T1: 20 – 39 (2.0 – 4.0, 14 – 29)
T2: 15 – 34 (1.5 – 3.5, 11 – 25)
T3: 25 – 34 (2.5 – 3.5, 18 – 25)
T4: 6 – 18 (0.6 – 1.8, 4.3 – 13.0)
T5: 18 – 27 (1.8 – 2.8, 13 – 20)

Fig. 17

L5-654

Seat Belts

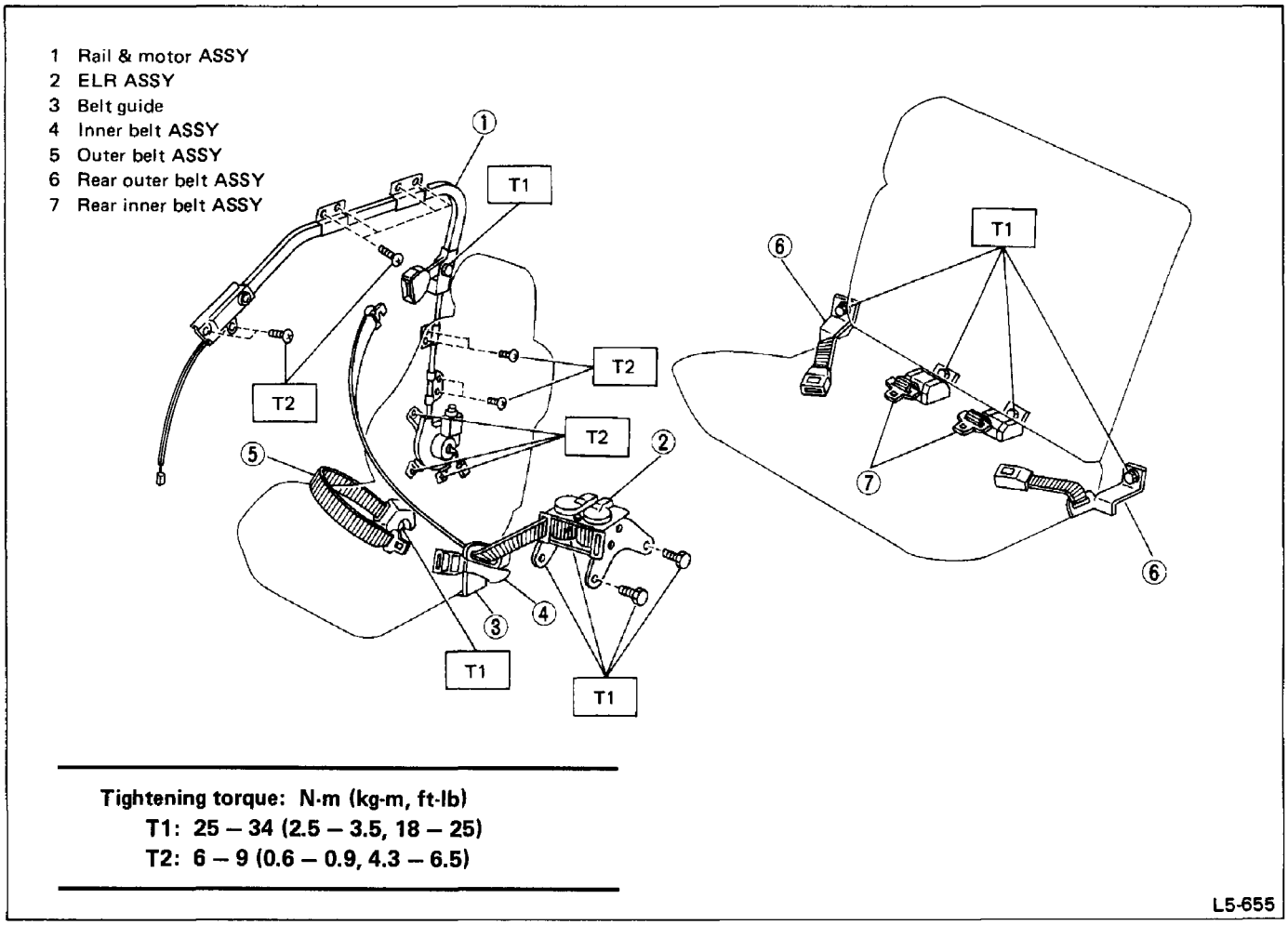

Fig. 18

Inner Accessories

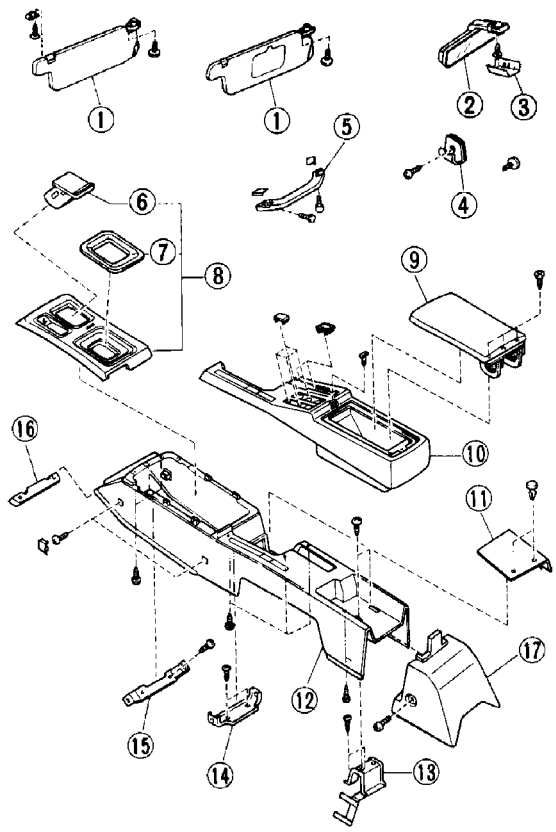

1 Sun visor ASSY
2 Rear view mirror ASSY
3 Rear view mirror cup
4 Coat hanger
5 Assist rail
6 Ash tray
7 Console boot
8 Console cover ASSY
9 Pocket lid CP
10 Console box (upper)
11 Tray CP
12 Console base
13 Console bracket CP
14 Console bracket (B)
15 Console bracket (A)
16 Console box bracket
17 ELR cover

L5-656

Fig. 19

Inner Trim

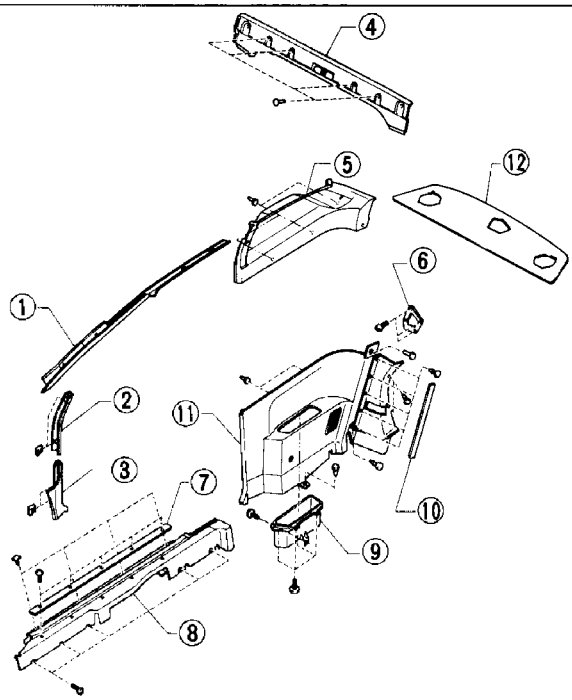

1 Front pillar trim panel
2 Front pillar center trim panel
3 Front pillar lower trim panel
4 Rear bulk trim panel
5 Rear quarter upper trim panel
6 Rear quarter bracket
7 Side cover plate
8 Side sill cover
9 Rear quarter pocket
10 Rear quarter strip
11 Rear quarter lower trim panel
12 Rear shelf trim panel

L5-657

Fig. 20

SERVICE PROCEDURE

Front Seat

REMOVAL

1) Move front seat all the way back using slide adjuster lever.
2) Remove bolts which hold front section of seat.
3) Move front seat all the way forward.
4) Remove bolt cover from rear end of slide rail on door side.

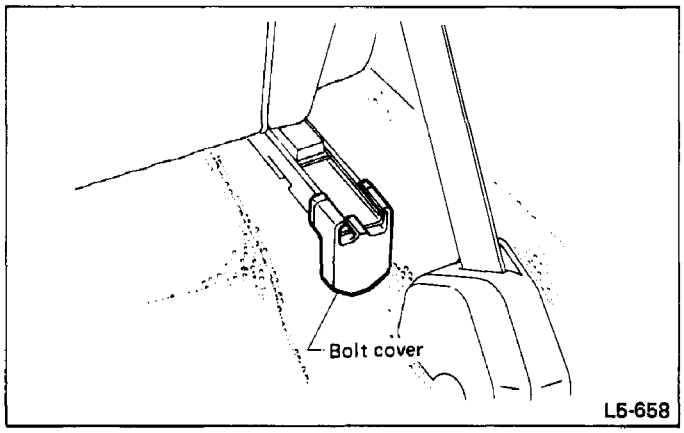

Fig. 21

5) Remove seat anchor cover from rear end of slide rail on tunnel side.

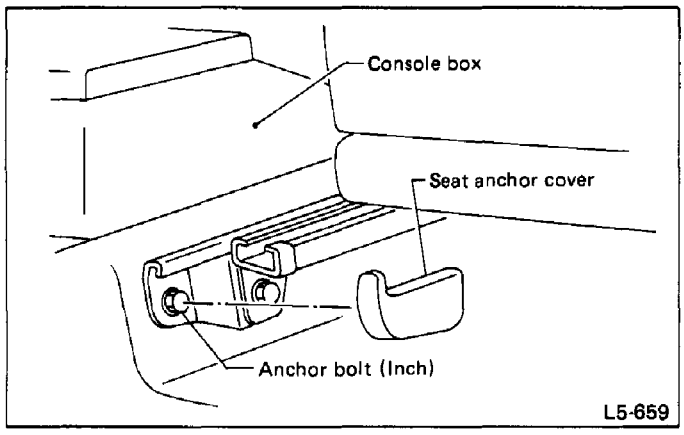

Fig. 22

6) Remove bolts which hold rear section of front seat and anchor bolt.

INSTALLATION

1) Fold backrest forward.
2) Move lower slide rails forward so that front seat is positioned all the way back.
3) Position front seat and align mounting holes.
4) Tighten bolt which holds front section of seat on tunnel side (at reference hole).
5) Tighten bolts which hold front section of seat on door side.
6) Move front seat all the way forward.
7) Tighten bolts which hold rear section of seat on tunnel side.
8) Similarly, tighten bolts on door side.
9) Tighten anchor bolt.
10) Install bolt cover at rear seat on door side and seat anchor cover at rear of seat on tunnel side.
11) After properly installing seat, move it back and forth to make sure slide rails function properly without binding.

Bolt tightening torque:
20 – 39 N·m (2.0 – 4.0 kg-m, 14 – 29 ft-lb)
Anchor bolt (pinch) tightening torque:
25 – 34 N·m (2.5 – 3.5 kg-m, 18 – 25 ft-lb)

Tighten bolts in the order designated.

Rear Seat

REMOVAL

1) Remove bolts which hold front of rear cushion to floor.
2) Slightly raise front side of rear seat cushion and push center rear section down. With seat cushion held in that position, move it forward until it is unhooked.

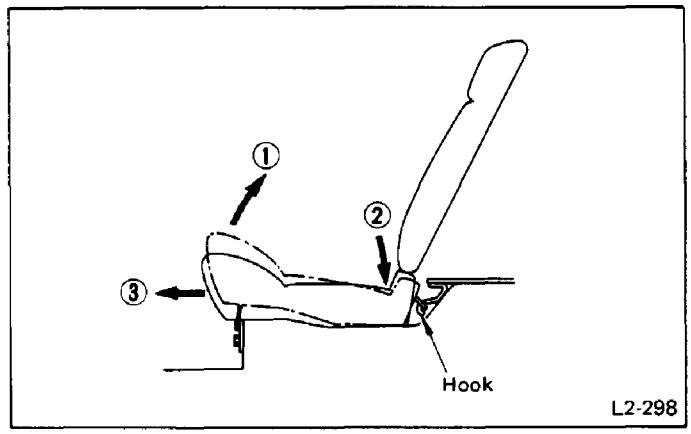

Fig. 23

3) Pass rear seat belt through slit at rear section of rear cushion.

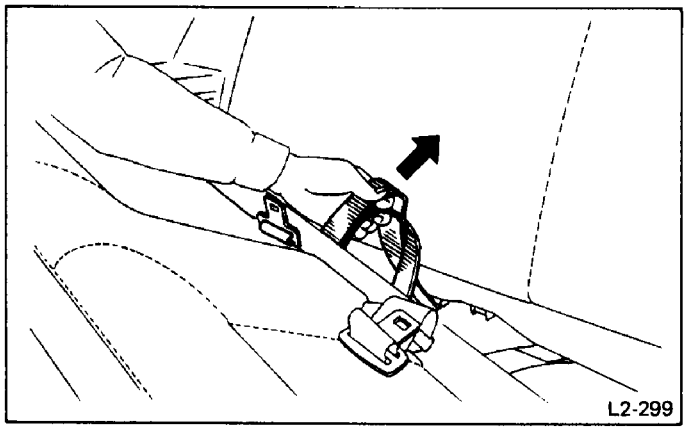

Fig. 24

4) Fold seat back rest forward and remove bolts which hold hinge to the right side of backrest.

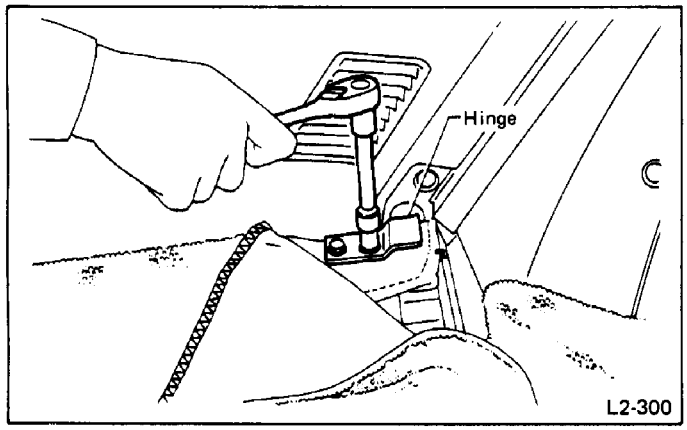

Fig. 25

5) Tilt rear seat backrest [approx. 400 mm (15.75 in)] forward and slide it toward the right until it can be detached from the left bracket.

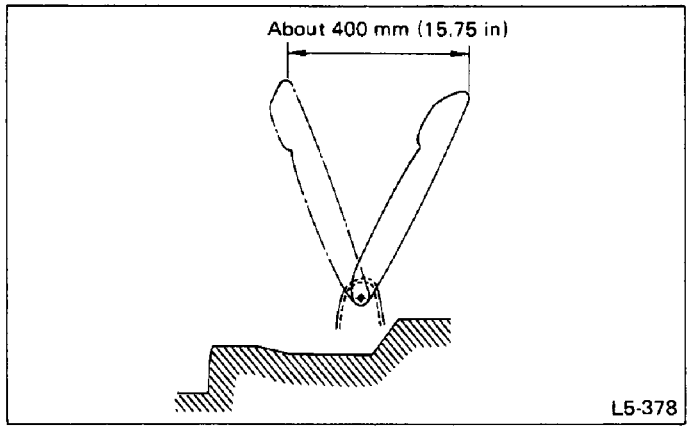

Fig. 26

INSTALLATION

Installation is in the reverse order of removal.

Trim Cushion And Trim Back

(1800cc DL model)

REMOVAL

1) Remove bolts which hold front of trim cushion to floor.
2) Slightly raise front side of trim cushion and push center rear section down. With trim cushion held in that position, move it forward until it is unhooked.
3) Remove caps from upper section of trim back, using a standard screwdriver, and remove screws.
4) Lift trim back up and remove.

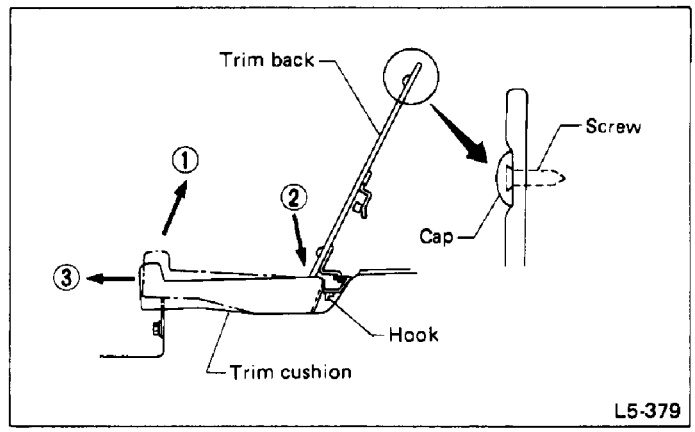

Fig. 27

INSTALLATION

Installation is in the reverse order of removal.

Seat Belts

Front Seat Belts (Automatic Shoulder Belt)

Rail & Motor Assembly

In case the connector to the automatic shoulder belt has been disconnected for repairs of the automatic shoulder belt or related parts or for repairs of other parts, be sure to disconnect the battery and reset the control unit.
If the connector of the automatic shoulder belt control unit or the connector of the front or rear limit switch has been disconnected once during repairs, the control unit can enter the failure mode when the connector is reconnected, making the automatic shoulder belt inoperative.

REMOVAL

1) Push emergency release button on the shoulder anchor and remove belt.

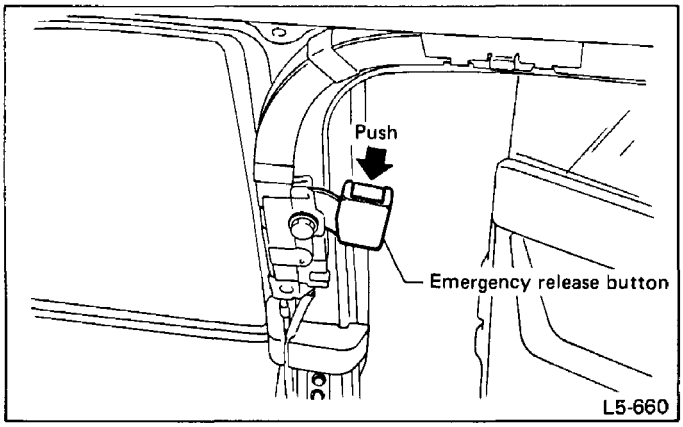

Fig. 28

2) Remove rear seat cushion and backrest.
3) Remove front pillar trim panel, rear quarter trim panel (upper and lower) and roof trim.
4) Disconnect the connector of the front limit switch, rear limit switch and motor.

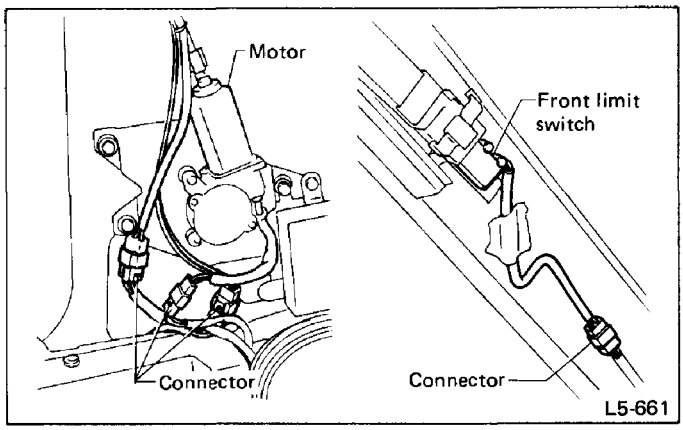

Fig. 29

5) Remove M6-bolts which hold side rail and motor ASSY.

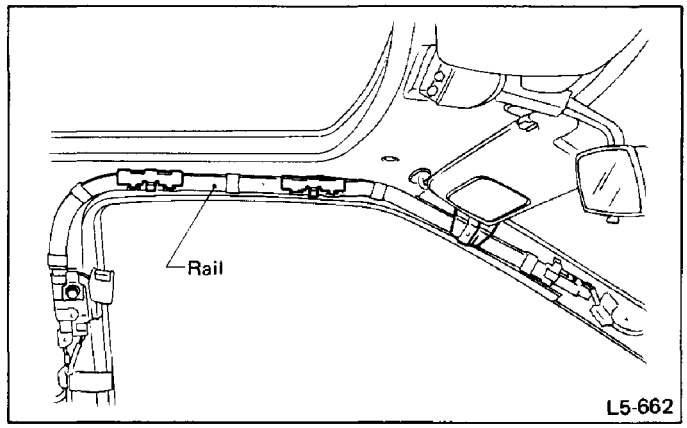

Fig. 30

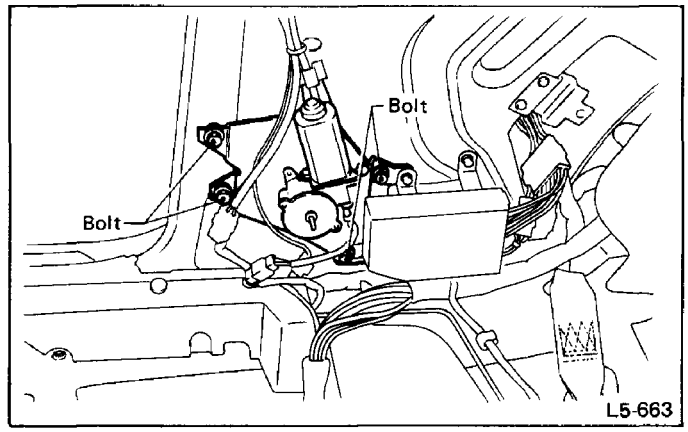

Fig. 31

DISASSEMBLY

FRONT LIMIT SWITCH

1) Remove screw and slide it in direction of the arrow.

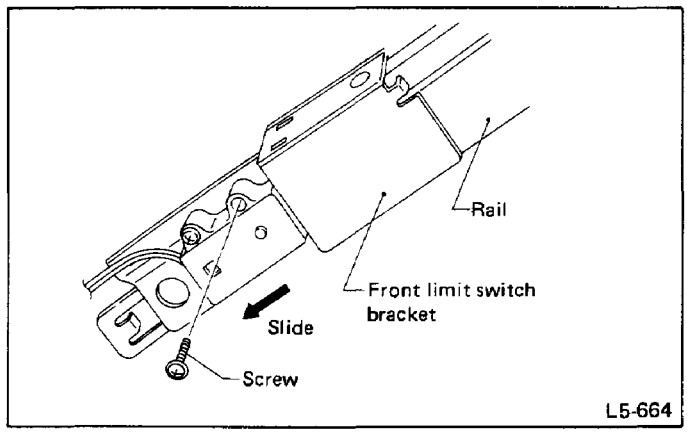

Fig. 32

LOCKING DEVICE (REAR LIMIT SWITCH, WARNING SWITCH)

1) Remove E-clip which fixies pin of the rail and tube and pull out the pin.

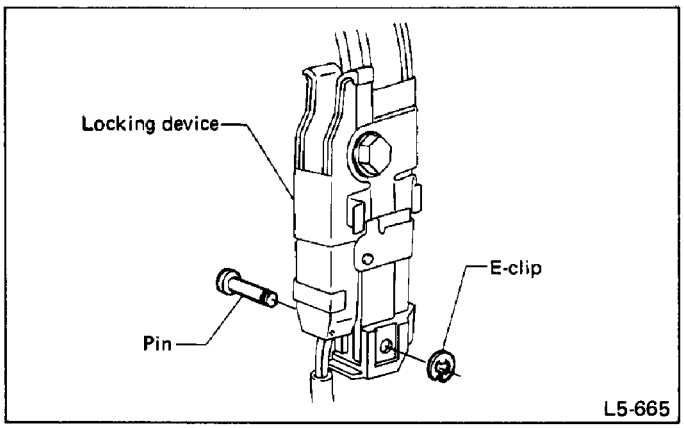

Fig. 33

2) Remove tube in the rail.
3) Pull out locking device by sliding.

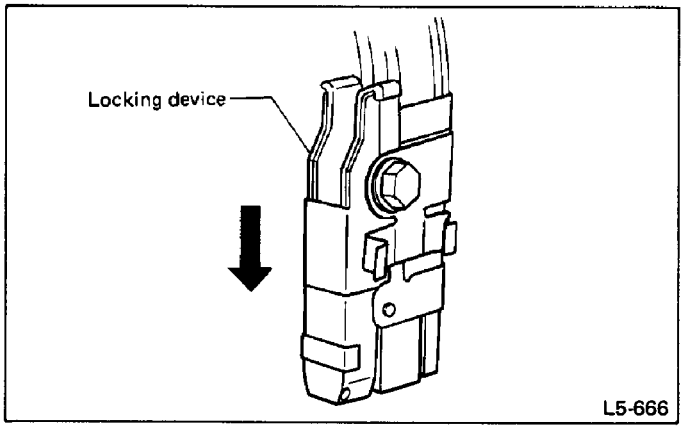

Fig. 34

SHOULDER ANCHOR (EMERGENCY RELEASE BUCKLE) & MOTOR ASSY

1) Remove locking device.
2) Remove motor ASSY wire and shoulder anchor as a unit from guide rail.

ASSEMBLY

Assembly is the reverse order of disassembly.

a. Assemble plastic part and shoulder anchor to wire end, as shown in Figure 35, and insert into guide rails.

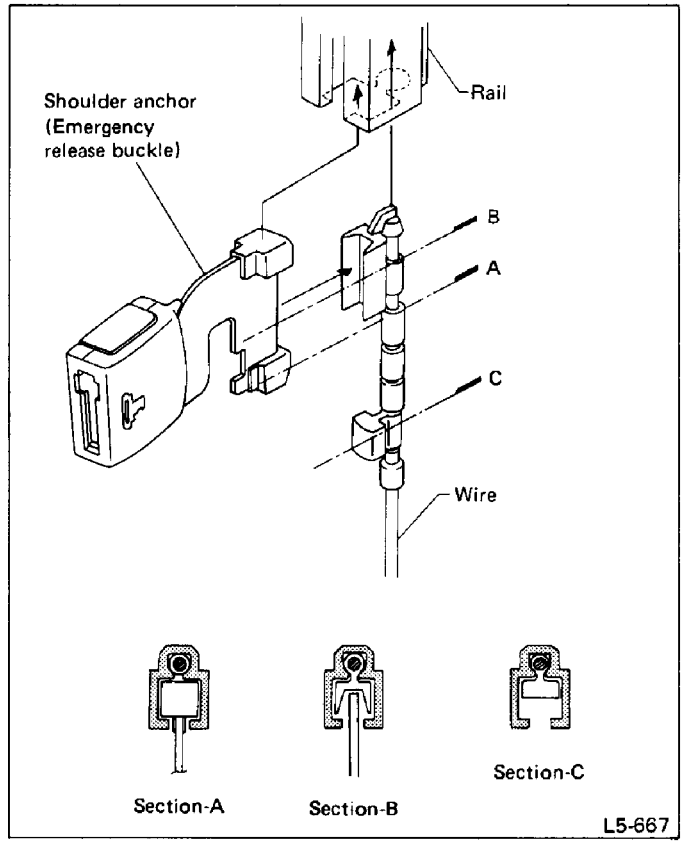

Fig. 35

b. Do not remove grease from wire.
c. Do not bend or twist wire too sharply.

INSTALLATION

Installation is the reverse order of removal.

Use M5-bolts length 12 mm (0.47 in) (901010001) or equivalent when installing assist rails.

OPERATION CHECK

Perform operation checks after replacing parts.

RAIL & MOTOR ASSY

While latching shoulder belt on shoulder anchor (emergency release buckle), open and close the door to check that shoulder anchor moves smoothly without binding, free play, etc.

EMERGENCY RELEASE BUCKLE

Check that tongue properly releases when emergency release button is pressed. Also check that click is heard to indicate proper latching when tongue is inserted into emergency release buckle.

ELR Assembly

REMOVAL

1) Push emergency release button on the shoulder anchor and remove belt.
2) Remove belt stopper. Withdraw shoulder belt from belt guide and wind on shoulder belt until the end reaches outlet hole on console box.

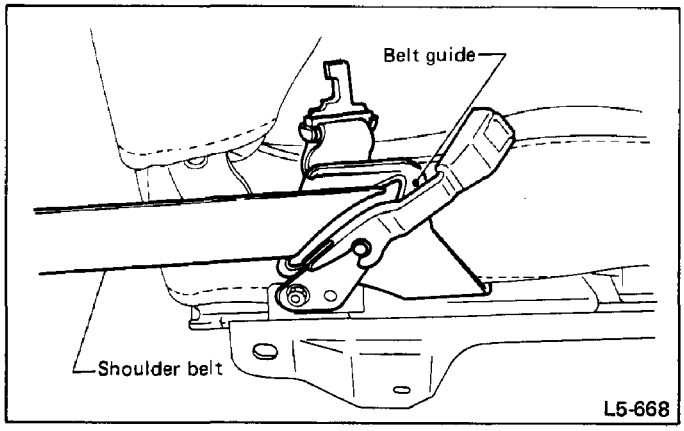

Fig. 36

3) Remove front seat.
4) Remove console box.
5) Remove anchor bolts which hold ELR ASSY.

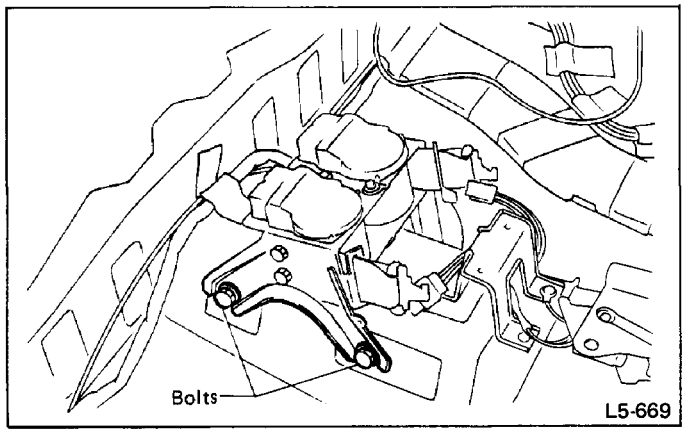

Fig. 37

DISASSEMBLY

Remove M6-bolts which mount base of ELR.

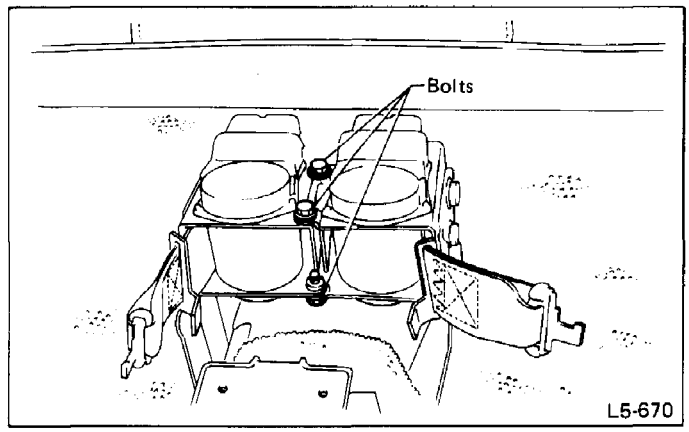

Fig. 38

ASSEMBLY AND INSTALLATION

Reverse the removal and disassembly procedures.

OPERATION CHECK

Perform operation checks before installing new parts.

1) Align point of ELR ASSY with floor tunnel and temporarily install ELR ASSY. Check that shoulder belt winds and unwinds properly.
2) Gradually tilt ELR ASSY. Check that ELR locks so that belt cannot be withdrawn when ELR is tilted 45° or more in relation to standard installation angle, and that ELR unlocks when it is tilted within 15°.

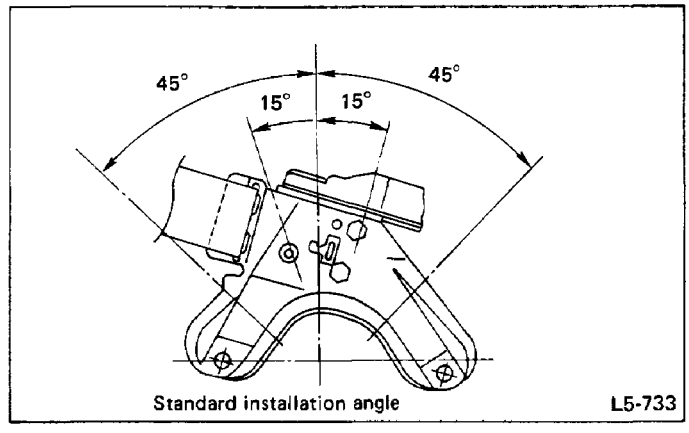

Fig. 39

Manual Lap Belt
Outer Belt Assembly

REMOVAL

1) Remove belt holder cap and remove either front or rear screw from belt holder.

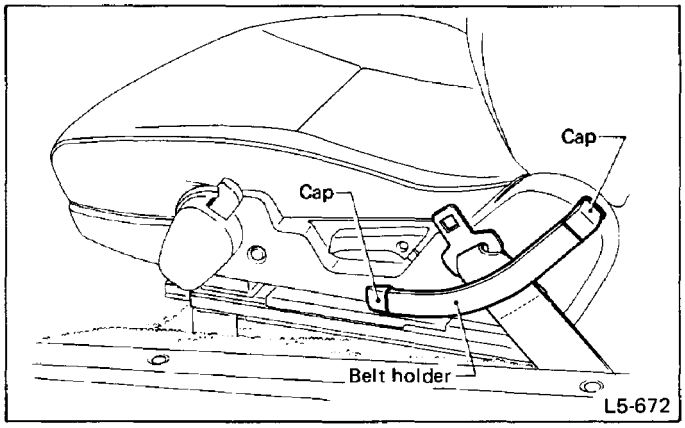

Fig. 40

2) Remove tongue from belt and reel the entire belt into ELR.
3) Move front seat to the extreme front position and remove anchor bolt and screw.

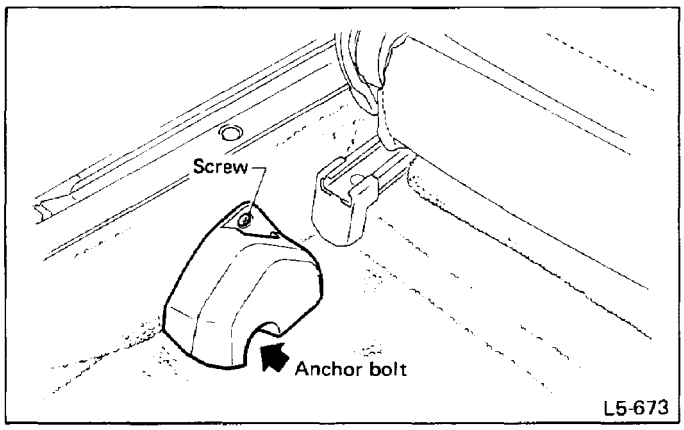

Fig. 41

INSTALLATION

Installation is in the reverse order of removal.

Inner Belt Assembly

REMOVAL

1) Push emergency release button on the shoulder anchor and remove belt.
2) Remove belt stopper. Remove shoulder belt from belt guide and reel it until its end reaches outlet hole in console box.
3) Remove front seats. (Disconnect belt warning connector located under driver seat.)

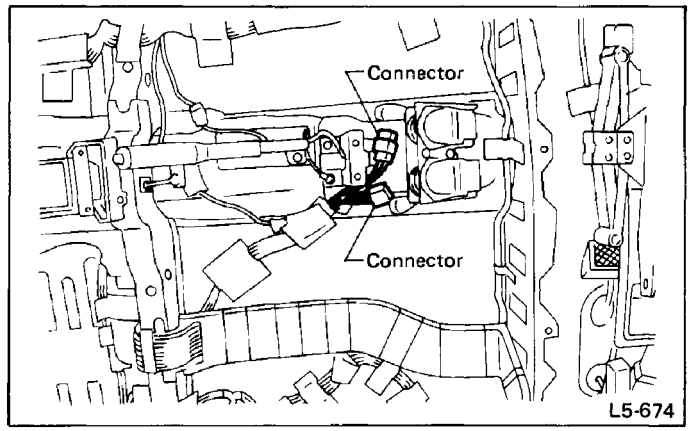

Fig. 42

4) Remove anchor nut and inner slide rail as a unit. (On driver seat, also remove tape which secures harness.)

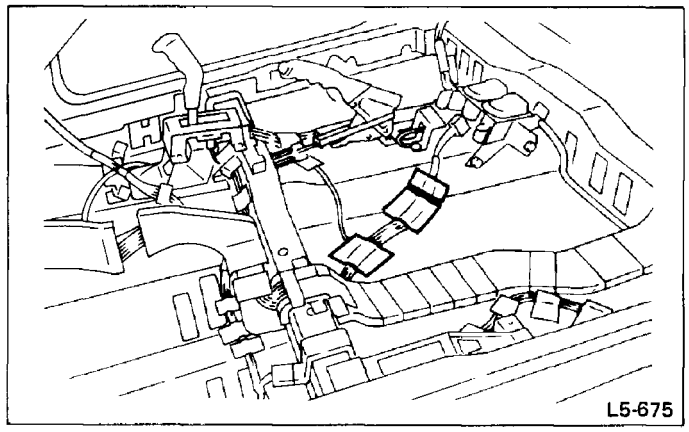

Fig. 43

INSTALLATION

Installation is in the reverse order of removal.

a. The left and right ELR's are not mutually interchangeable because different sensors are used.
b. On inner belts, be sure to insert pin into position-limit guide hole.

OPERATION CHECK

Perform operation checks before installing new parts.

1) Temporarily install ELR ASSY under center pillar. Check that lap belt reels in and out properly.
2) Gradually tilt ELR ASSY. Check that ELR locks so that lap belt cannot be withdrawn when ELR is tilted 45° or more in relation to standard installation angle, and that ELR unlocks when it is tilted within 15°.

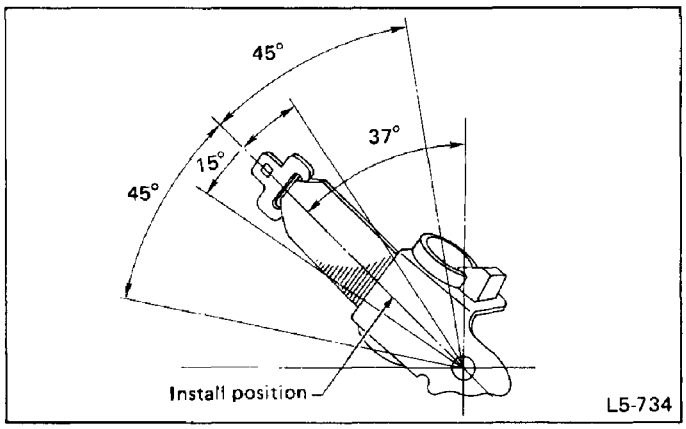

Fig. 44

Rear Seat Belt

REMOVAL

OUTER BELT

1) Remove rear cushion and rear back rest.
2) Remove rear quarter upper and lower trim panel.
3) Remove outer anchor bolt and outer belt.

INNER BELT

1) Remove rear cushion.
2) Remove inner anchor bolt and inner belt.

INSTALLATION

Installation is in the reverse order of removal.

a. Remove anchor bolts, washers, spacers, etc. as a unit.
b. Be careful not to twist belts during installation.
c. Do not confuse outer and center buckles during installation. Although they look alike, they are not interchangeable.

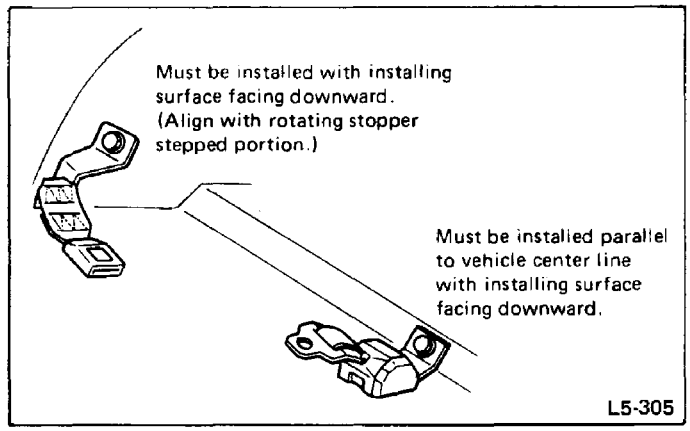

Fig. 45

Console Box

REMOVAL

1) Remove front seats.
2) Apply hand brake lever.
3) Remove console cover and disconnect connector of cigarette lighter.
4) Remove clips from tray and detach tray.

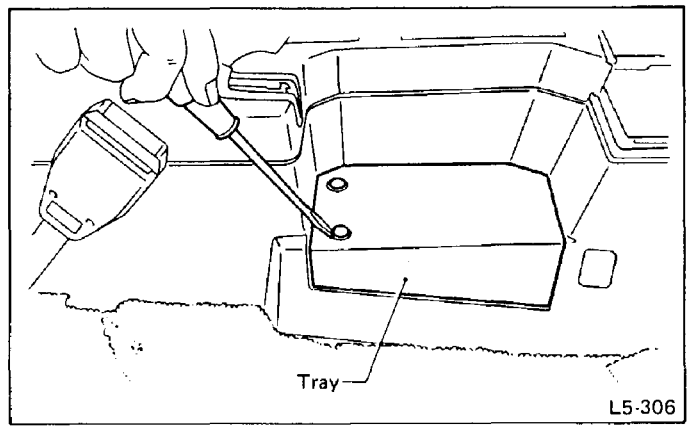

Fig. 46

5) Remove caps from the side of console box.
6) Open console box lid and remove screws from bottom of console box.

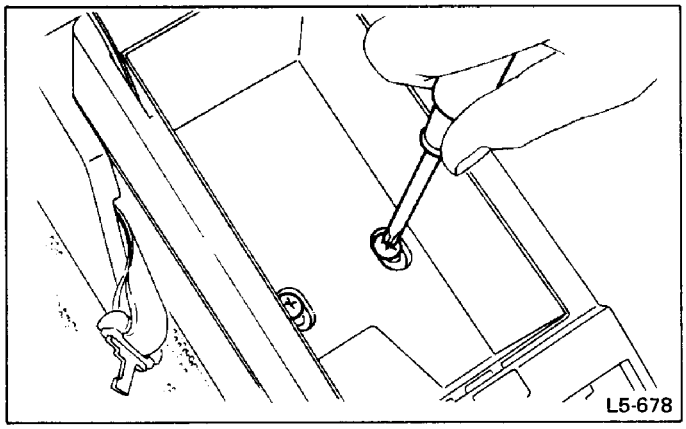

Fig. 47

7) Remove screws from the side of console box.
8) Disconnect switch harness connectors, and move console box back and up.

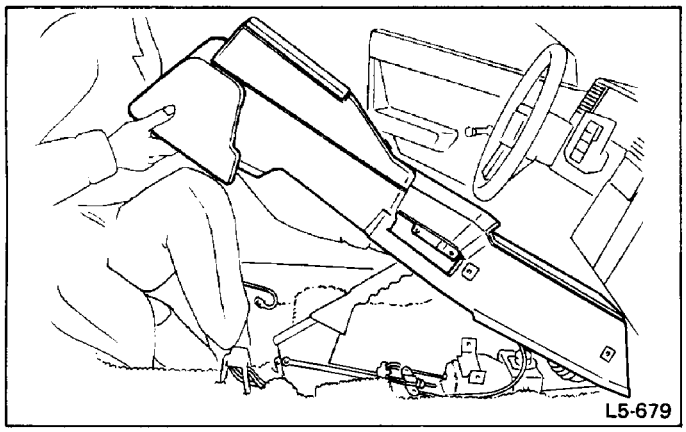

Fig. 48

INSTALLATION

Installation is in the reverse order of removal.

Do not allow wiring harnesses to get caught in console box when installing.

Rear Luggage Shelf

REMOVAL

1) Remove rear seat cushion and backrest.
2) Remove rear pillar upper trim panel.
3) Disconnect harness connector for "High-mount stop lamp".
4) Remove eight clips which hold rear luggage shelf, and detach rear luggage shelf.
[If equipped with mat, use CLIP PULLER (925580000) to remove eight clips.]

INSTALLATION

Installation is in the reverse order of removal.

Inner Trim

Front Pillar Upper Trim Panel

REMOVAL

1) Remove assist rail from passenger seat side.
2) Pull trim panel down at side rail location, and remove resin clips.

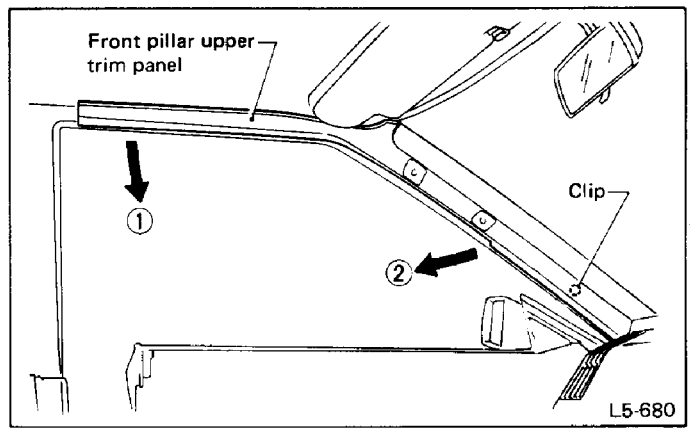

Fig. 49

3) Pull trim panel at front pillar location, and remove the sheet metal clip from car body.
4) Slide trim panel back and remove.

INSTALLATION

1) Be sure clips are securely installed on trim panel.
2) Align clips with holes in front pillar, and tap trim panel until clips are fitted into body.
3) Align clips with holes at side rail location, and tap trim panel until clips are fitted into car body.
4) Install assist rail on passenger seat side.

Use H5-bolts length 12 mm (0.47 in) (901010001) or equivalent when installing assist rails.

Front Pillar Center Trim Panel

REMOVAL

Pull trim back and remove.

INSTALLATION

Insert lower side of center trim panel into lower trim panel and push it against body flange.

Front Pillar Lower Trim Panel

REMOVAL

1) Remove clip which holds the right lower cover.
2) Pull trim panel back and remove.

Rear Quarter Upper Trim Panel

REMOVAL

1) Fold rear back rest forward. (On DL models, remove trim back.)
2) Remove shoulder anchor bolt of seat belt.
3) Remove belt cover at outer belt outlet portion and remove screw.
4) Remove clip from rear section of trim panel.

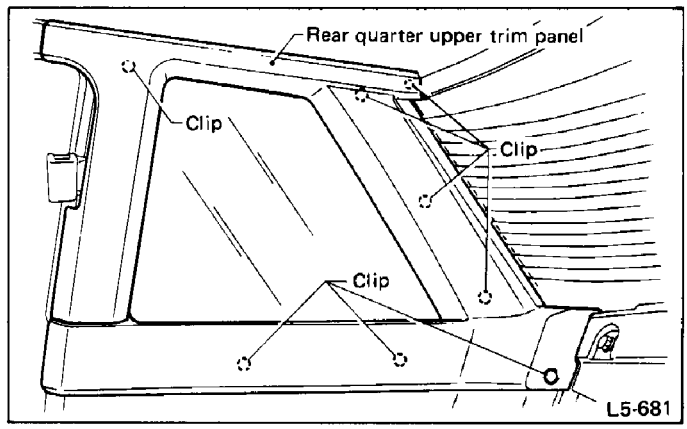

Fig. 50

5) Remove clips (6 places) which hold trim panel to car body, using CLIP PULLER (925580000).
6) Disengage pawls from body flange at front section of trim panel.
7) Slide trim panel forward and remove.

INSTALLATION

Installation is in the reverse order of removal.

Be sure pawls are securely attached to body flange at front section of trim panel.

Rear Quarter Lower Trim Panel

REMOVAL

1) Remove rear back rest and cushion.
(On DL models, remove trim cushion and trim back instead.)
2) Remove rear quarter upper trim panel.
3) Remove clips (6 places) which hold lower trim panel to car body, using CLIP PULLER (925580000).

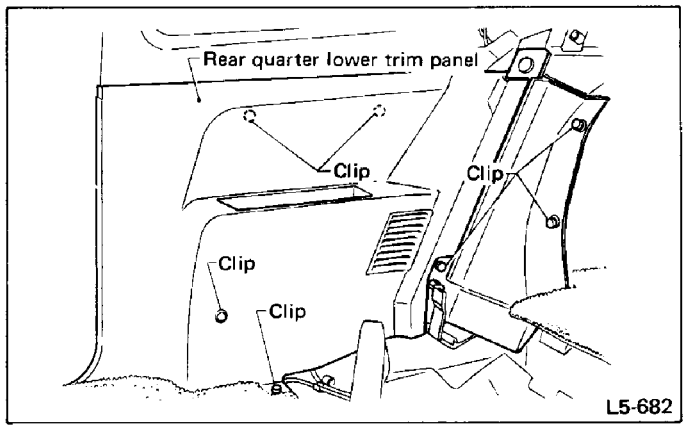

Fig. 51

4) Slide lower trim panel forward and remove.

Rear Bulk Trim Panel

REMOVAL

1) Fold rear back rest forward. (On DL models, remove trim back.)
2) Remove rear sides of rear quarter upper trim panel and lower trim panel.
3) Remove bolts which hold striker.
4) Remove clips (4 places) and stoppers (2 places) which hold rear bulk trim panel to car body, using CLIP PULLER (925580000).

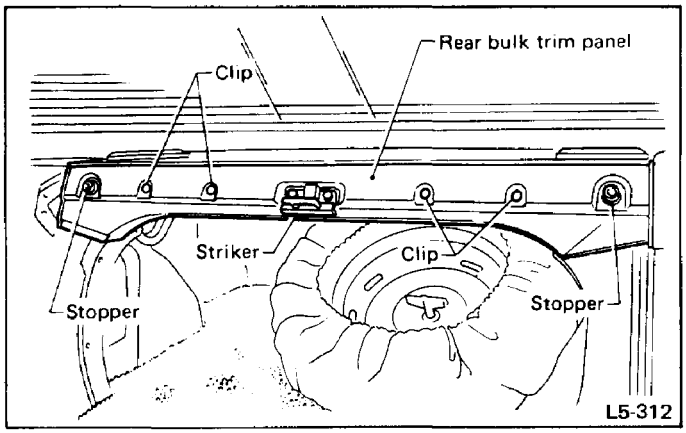

Fig. 52

5) Remove rear bulk trim panel from car body.

INSTALLATION

Installation is in the reverse order of removal.

Be sure upper section of rear bulk trim panel is placed between rear luggage shelf and car body.

Side Sill Cover

REMOVAL

1) Remove rear seat cushion. (On DL models, remove trim cushion).
2) Remove ELR unit of the manual lap belt.
3) Remove side cover plate.
4) Remove clips from side sill cover.
5) Remove tapping screws from side sill cover, and detach side sill cover from car body.

INSTALLATION

Installation is in the reverse order of removal.

Do not allow harnesses and piping to get caught between side sill cover and car body during installation.

Trunk Mat

REMOVAL

1) Fold rear back rest forward. (On DL models, remove trim cushion.)
2) Remove spare tire supporter and holder.

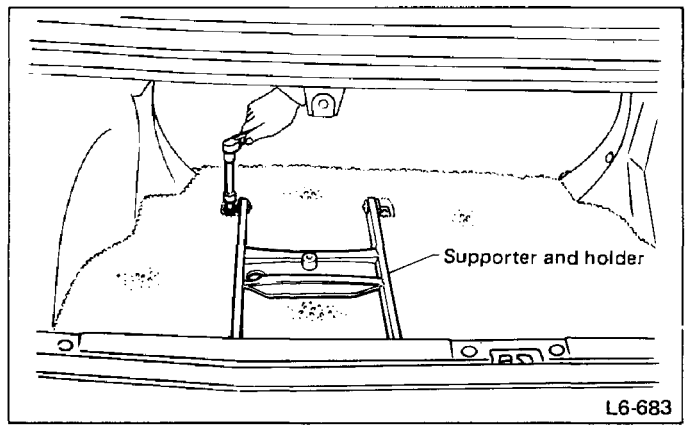

Fig. 53

3) Remove clips which hold front side of trunk mat, and detach trunk mat.

Rear Luggage Shelf

REMOVAL

1) Fold rear back rest forward. (On DL models, remove trim back.)
2) Remove rear quarter upper trim panel.
3) Remove clips (10 places) which hold rear luggage shelf to car body, using CLIP PULLER (925580000).

Trunk Rear Trim Panel

REMOVAL

1) Remove clips (7 places) which hold trim panel to car body.
2) Remove trim panel from trunk while deflecting it.

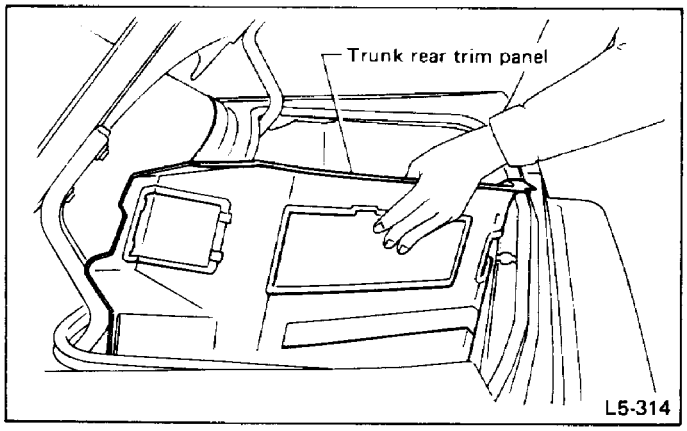

Fig. 54

Trunk Side Trim Panel

REMOVAL

1) Remove rear seat cushion and back rest. (On DL models, remove trim cushion and trim back.)
2) Remove rear quarter lower trim panel.
3) Remove center clip.
4) Detach adhesive tape which holds front and upper rear sections of trim panel to car body, and remove trim panel.

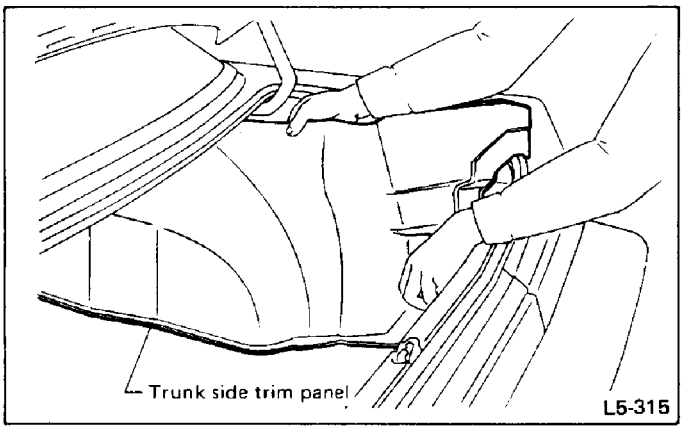

Fig. 55

Roof Trim

REMOVAL

1) Completely open doors and lower windows all the way.
2) Fold front seat back rest rearward.
3) Remove sun roof escutcheon, (sun roof models).
4) Remove clips (4 places) which hold rear trim rail, using CLIP PULLER (925580000).

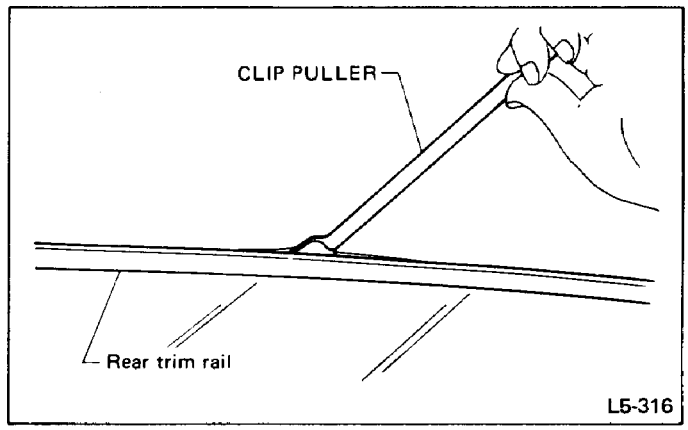

Fig. 56

5) Remove rear quarter upper trim panel.
6) Remove assist rail caps using a standard screwdriver, and remove screws which hold assist rail.
7) Remove front pillar upper trim panel.
8) Remove rearview mirror cap.
Straighten tongues which engage with rearview mirror stay in advance.

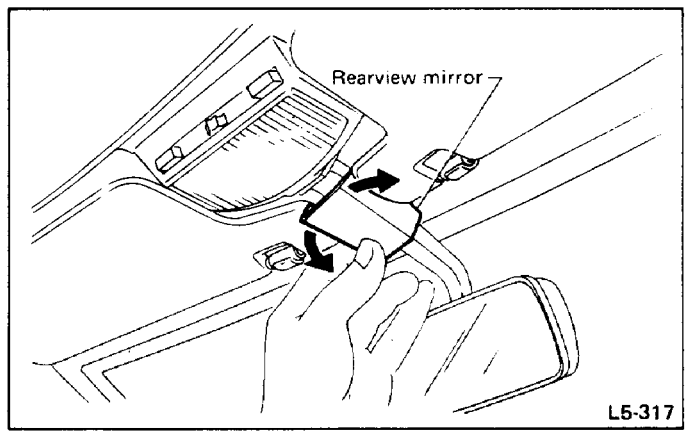

Fig. 57

9) Remove spot & room lamp, and disconnect harness connector.
10) Remove rearview mirror.
11) Turn roof clip on passenger side counterclockwise and remove.

12) Remove coat hanger on driver's side.
13) Remove sun visor and hook.

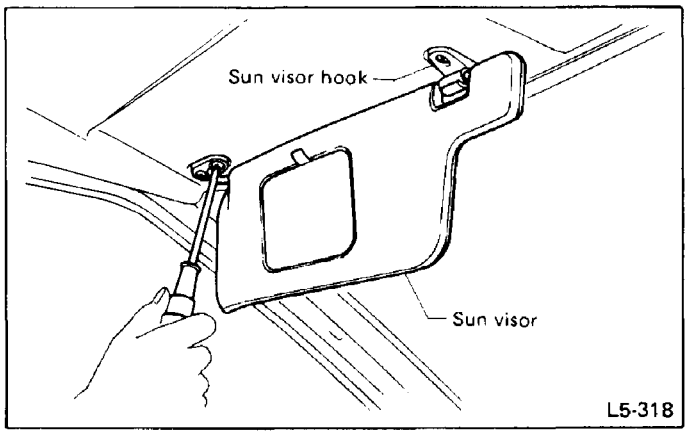

Fig. 58

14) Remove clips A which hold trim to roof, using CLIP PULLER (925580000) (7 places on sun roof models and 1 place on all other models).
15) Remove roof trim from car body.

Do not fold edge section of room trim when removing.

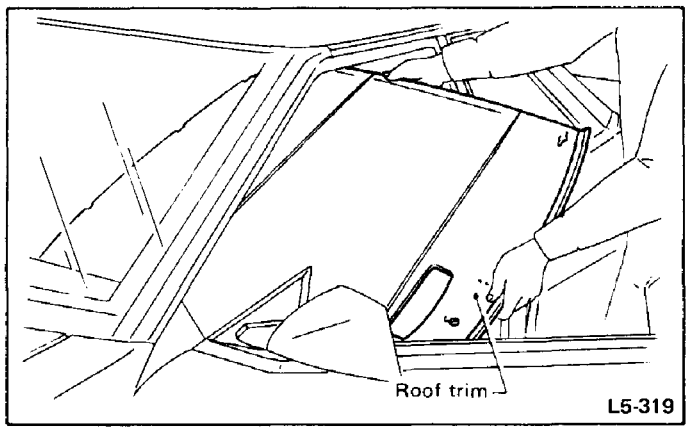

Fig. 59

Floor Mat

REMOVAL

1) Remove front seat.
2) Remove rear seat cushion. (On DL models, remove trim cushion.)
3) Remove ELR unit of the manual lap belt.
4) Remove console box.
5) Remove front pillar lower trim panel.
6) Remove clips (3 places) from rear section of floor mat.
7) Remove side cover plate.

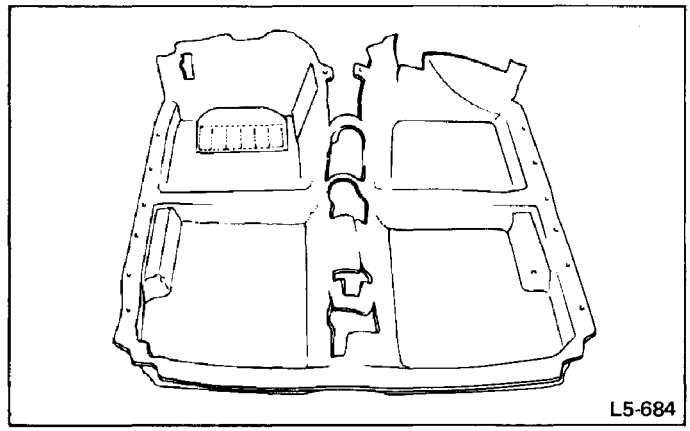

Fig. 60

8) Undo mat hooks.
9) Detach velcro tape of front apron section.
10) Straighten hooks at toeboard location and detach mat.
11) Detach mat from hooks at lower section of heater unit.
12) Remove mat, without disturbing hand brake lever, etc.

INSTALLATION

Installation is in the reverse order of removal.

a. Be sure floor mat is held with hooks and velcro tape.
b. Be sure side cover plate is held with clips.

TROUBLESHOOTING

Automatic Shoulder Belt

If the automatic shoulder belt fails to operate, be sure to troubleshoot before disconnecting the battery.

CAUTION:

Even if the automatic shoulder belt does not have faulty parts, it can become inoperative if the shoulder belt anchor is forced down or the front or rear limit switch is operated manually. In such a case, if you disconnect the battery, the trouble will be corrected automatically, without giving you the chance to determine its cause.

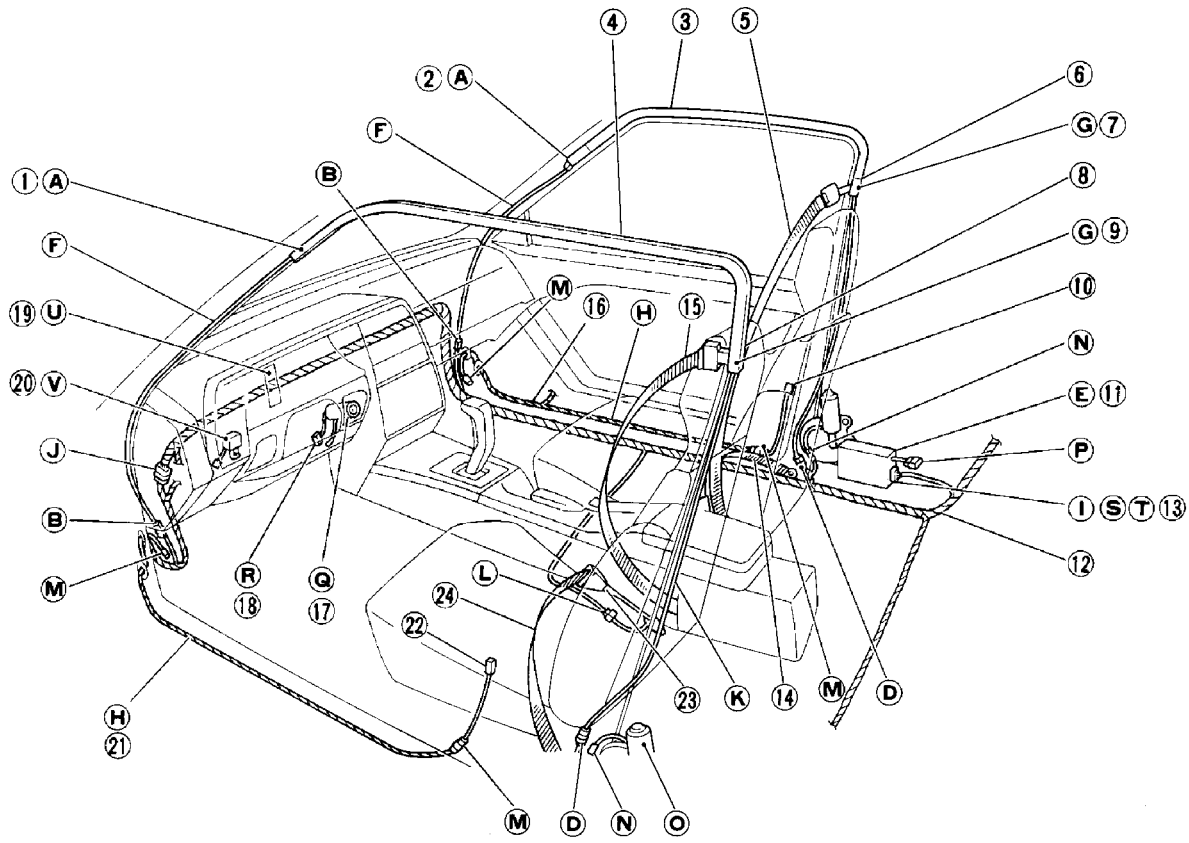

1 Driver's seat side front limit switch
2 Passenger's seat side front limit switch
3 Passenger's seat side rail & motor ASSY
4 Driver's seat side rail & motor ASSY
5 Passenger's seat side shoulder belt
6 Passenger's seat side rear limit switch
7 Passenger's seat side ERB switch
8 Driver's seat side rear limit switch
9 Driver's seat side ERB switch
10 Passenger's seat side door switch
11 Control unit
12 Wiring harness
13 GND wire, BATT wire
14 Passenger's seat side lap belt
15 Driver's seat side shoulder belt
16 Passenger's seat side door cord
17 Key switch
18 IG. SW.
19 Warning lamp (built in meter)
20 Chime
21 Driver's seat side cord
22 Driver's seat side door switch
23 Driver's seat side lap belt switch
24 Driver's seat side lap belt

L5-735

Fig. 61

Location	Timing of occurrence	Probable cause	Operation leading to occurrence	Indication when IG. SW. is ON	Symptom when belt anchor is faulty	Fault reset
A	Only when IG. SW. is ON	Faulty operation of front limit switch	Front limit switch is pressed or held down when belt anchor is at reverse end	Flashing at 0.3/0.3 sec.	Belt anchor remains stationary at reverse end	a
F	Always	Shorted front limit switch circuit	Door operated 32 times at intervals			Battery — OFF *1
		Open front limit switch circuit	Belt anchor moved to reverse end with door closed			a
B	Only when IG. SW. is ON	Disconnection or connection of connector	Connector disconnected or connected when belt anchor is at reverse end			Battery — OFF
	Always	Disconnected connector	Belt anchor moved to reverse end with door closed			c
J	Only when IG. SW. is ON	Disconnection or connection of connector	Connector disconnected or connected when belt anchor is at reverse end			Battery — OFF
	Always	Disconnected connector	Belt anchor moved to reverse end with battery connected			c
M	Always	Disconnected connector	Belt anchor moved to reverse end when IG. SW. is OFF	OFF	Belt anchor remains stationary at reverse end	b
H	Always	Open circuit in door switch circuit (⑳), (㉒) **	Belt anchor moved to reverse end			b
	Only when IG. SW. is ON	Open circuit in door switch circuit (⑰), (㉑) **	IG. SW. is ON	Depends on anchor location	Remains where it was when IG. SW. was turned ON	IG. SW. is OFF *1
	Only when IG. SW. is OFF	Shorted door switch circuit	Belt anchor moved to forward end when battery is connected	OFF	Remains stationary at forward end	a
	Only when IG. SW. is ON		Belt anchor moved to reverse end when IG. SW. is ON	Flashing at 0.3/0.3 sec.	Belt anchor remains stationary at reverse end	a
	Only when IG. SW. is ON	Shorted door switch circuit (⑳) — (⑰), (㉒) — (㉑) **	Belt anchor moved to reverse end when IG. SW. is ON			IG. SW. is OFF *2
G	Only when IG. SW. is ON	Faulty operation of ERB switch	Belt anchor arrived at forward end with ERB switch held down		Normal operation (lamp flash only)	IG. SW. is OFF *1
K	Always	Shorted rear limit switch	Door operated 32 times at intervals		Belt anchor remains stationary at reverse end	Battery — OFF *1
		Open circuit in rear limit switch	Belt anchor moved to forward limit when door is opened		Remains stationary at forward end	c

Location	Timing of occurrence	Probable cause	Operation leading to occurrence	Indication when IG. SW. is ON	Symptom when belt anchor is faulty	Fault reset
D	Only when IG. SW. is ON	Disconnection or connection of connector	Connector disconnected and connected when belt anchor is at forward end	Flashing at 0.3/0.3 sec.	Note	Battery – OFF
	Always	Disconnected connector	Belt anchor moved to forward limit when door is opened		Remains stationary at forward end	c
E	Always	Incorrect operation of microcomputer		ON	Belt anchor remains stationary at reverse end	Battery – OFF
I	Only when IG. SW. is ON	Disconnection or connection of connector	Connector inserted when belt anchor is at reverse or forward end	Flashing at 0.3/0.3 sec.	Belt anchor remains stationary at reverse end	Battery – OFF
N	Always	Disconnected connector	Door operation	OFF	No movement at all	b
P	Always	Disconnected connector	Door operation			b
O	Always	Open circuit in motor circuit	Door operation			b
		Shorted motor circuit	Battery connection		Fuse blows	b
L	Only when IG. SW. is ON	Shorted lap buckle switch circuit	IG. SW. is ON when tongue is not inserted in lap belt buckle	Flashing at 0.5/0.7 sec.	Chime does not sound even without tongue	b
	Only when IG. SW. is ON	Disconnected connector	IG. SW. is ON when tongue is inserted in lap belt buckle		Chime sounds even with tongue	b
Q	Only when key SW. is ON *	Disconnected connector	Driver side door opened with key in position	OFF	Normal operation (key warning chime does not operate)	b
R	When IG. SW. is ON	Disconnected connector	IG. SW. is ON	OFF	Normal operation (lamp does not come ON, key warning chime operates, etc.)	b
	When IG. SW. is ON	Terminal (⑨) shorted to GND (open to 12V)	IG. SW. is ON			b
T	Always	Power failure, blown fuse	No motion at all	OFF	No motion at all	b
U	Only when IG. SW. is ON	Disconnected connector (lamp)	IG. SW. is ON	OFF	Normal operation (lamp does not come ON)	b
		Short circuit in lamp circuit	IG. SW. is ON		Deteriorated or broken lamp circuit in control unit. Belt operates normally	Replace control unit

Location	Timing of occurrence	Probable cause	Operation leading to occurrence	Indication when IG. SW. is ON	Symptom when belt anchor is faulty	Fault reset
V	When KEY SW. is ON* and IG. SW. is ON	Disconnected connector (chime)	Drive door opened with KEY SW. ON*	OFF	Normal operation (key warning chime does not operate)	b
		Short circuit in chime circuit	Drive door opened with KEY SW. ON*		Normal operation, but deterioration or breakage in control unit chime circuit	Replace control unit
S	Always	Floated GND wire	No motion at all	—	No motion at all	a
H	When IG. SW. is OFF	Shorted door SW. circuit (⑳) — (⑰), (㉒) — (㉑)**	Cause generated at belt anchor reverse end	—	Remains at reverse end (lamp and chime operate)	b

*: With key insterted
**: Control unit side connector terminal No.

Operation at belt anchor failure depends on the interval from removal to reconnection of the connector.
Reconnected within 13 sec. . . . Belt anchor moves from forward end toward reverse end and stops after 13 sec.
Reconnected after 13 sec. or more . . . Remains stationary at forward end.
In either case, it moves to reverse end and stops there if IG. SW. is turned ON, then OFF and again ON.

Fault reset
a: Reset to normal when battery is reconnected after removal of the cause.
b: Reset to normal when cause is removed.
Battery OFF is reset to normal by its reconnection.
Battery OFF*1 occurs again as it has not been corrected actually.
IG. SW. OFF is reset to normal when IG. SW. is set from ON to OFF.
IG. SW. OFF*2 occurs again as it has not been corrected actually.
c: a when IG. SW. is ON and b when IG. SW. is OFF.

INSTRUMENT PANEL

5-4

SUBARU

1988

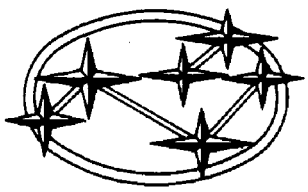

Page

COMPONENT PARTS 2
SERVICE PROCEDURE 4
Instrument Panel 4
Pocket 5

COMPONENT PARTS

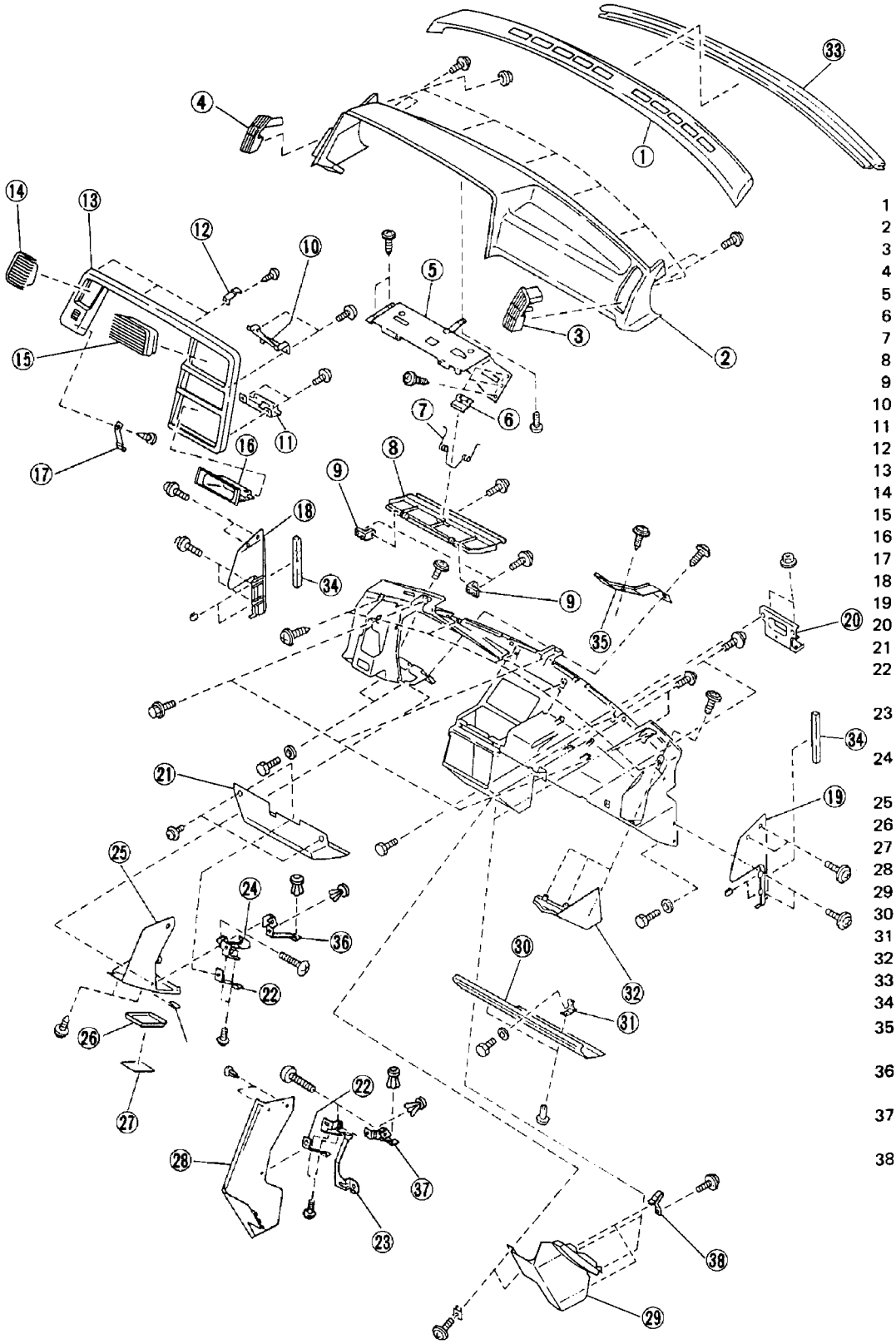

1 Upper panel
2 Instrument panel
3 Grille pad RH
4 Grille pad LH
5 Reinforcement A
6 Meter visor bracket
7 Meter visor spring
8 Meter visor
9 Meter visor hinge
10 Visor and clock bracket
11 Visor A bracket
12 Visor A spring
13 Visor
14 Side grille visor
15 Center grille visor
16 Visor center pocket
17 Visor B spring
18 Side instrument panel cover
19 Side instrument panel cover
20 Instrument center bracket
21 Driver side lower cover
22 Bracket COMPL A
(With automatic shoulder belt)
23 Driver side lower cover bracket RH
(With automatic shoulder belt)
24 Driver side lower cover bracket LH
(With automatic shoulder belt)
25 Driver side lower panel
26 Fuse box lid ASSY
27 Fuse box label
28 Driver side center lower panel
29 Passenger side center lower panel
30 Passenger side lower cover
31 Passenger side lower cover bracket
32 Passenger side lower panel
33 Instrument insulator weatherstrip
34 Instrument panel side garnish
35 Instrument panel side bracket
(With automatic shoulder belt)
36 Driver side lower cover bracket LH
(Except automatic shoulder belt)
37 Driver side lower cover bracket RH
(Except automatic shoulder belt)
38 Cluster clip
(Except automatic shoulder belt)

Fig. 1

L5-730

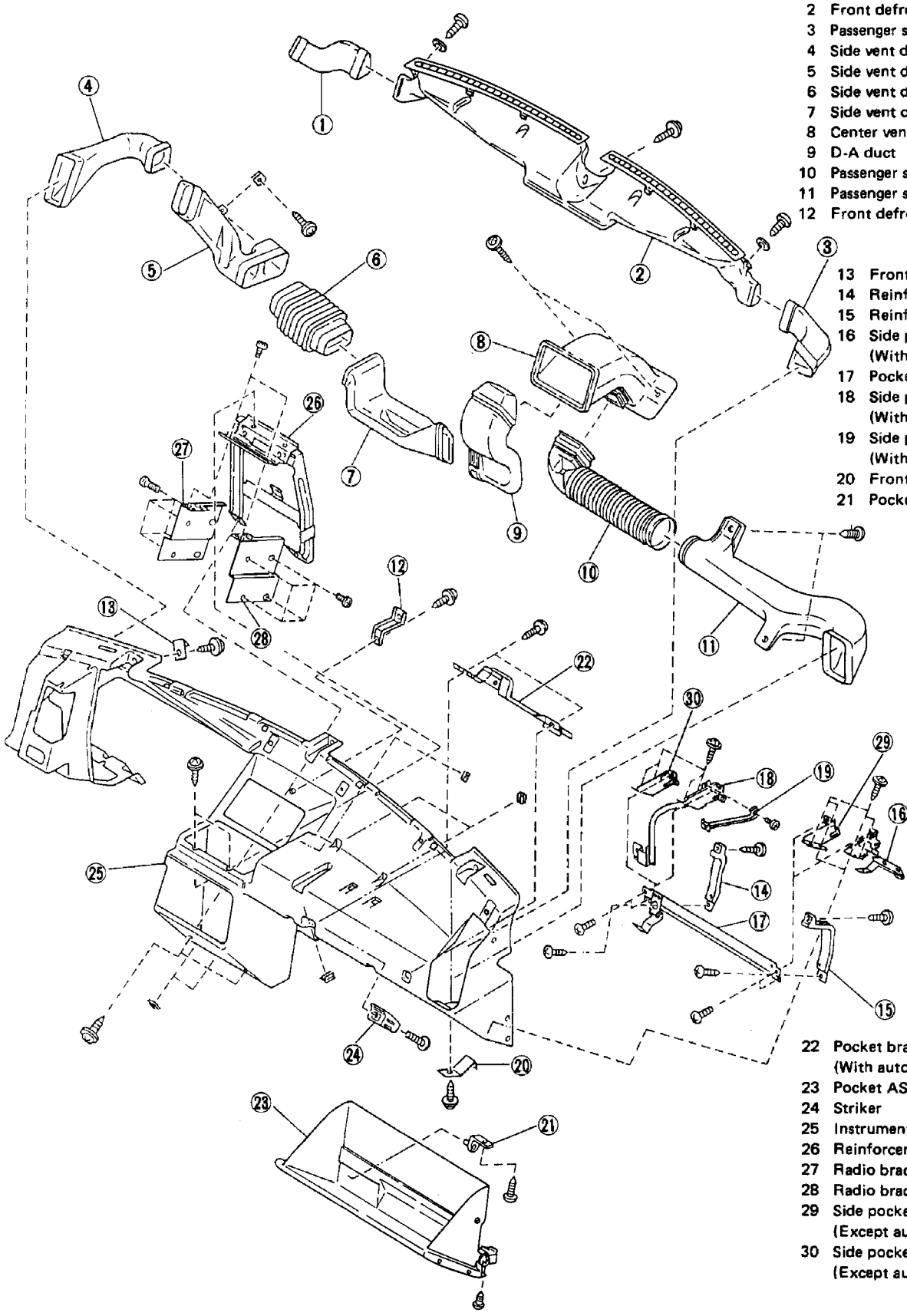

1 Driver side defroster duct
2 Front defroster nozzle
3 Passenger side defroster duct
4 Side vent duct
5 Side vent duct
6 Side vent duct
7 Side vent duct
8 Center vent duct
9 D-A duct
10 Passenger side center vent duct
11 Passenger side center vent duct
12 Front defroster center bracket
13 Front defroster bracket LH
14 Reinforcement B
15 Reinforcement C
16 Side pocket bracket B
(With automatic shoulder belt)
17 Pocket frame COMPL
18 Side pocket bracket A
(With automatic shoulder belt)
19 Side pocket bracket
(With automatic shoulder belt)
20 Front defroster bracket RH
21 Pocket hinge
22 Pocket bracket
(With automatic shoulder belt)
23 Pocket ASSY
24 Striker
25 Instrument panel LH
26 Reinforcement DCP
27 Radio bracket LH
28 Radio bracket RH
29 Side pocket bracket B
(Except automatic shoulder belt)
30 Side pocket bracket A
(Except automatic shoulder belt)

Fig. 2

L5-731

SERVICE PROCEDURE

Instrument Panel

REMOVAL

1) Remove lower cover on driver's side.

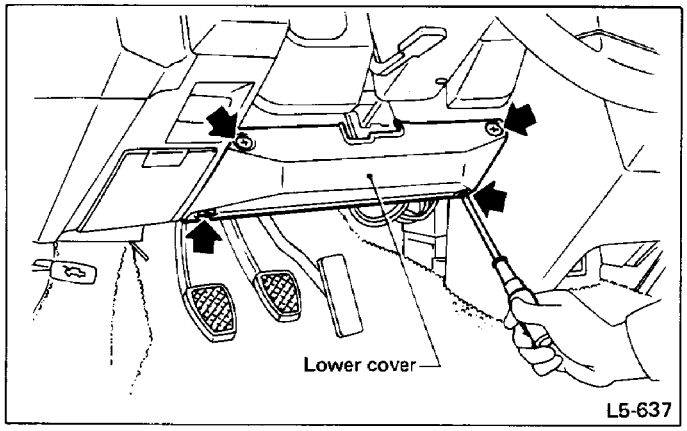

Fig. 3

2) Remove side ventilation duct.

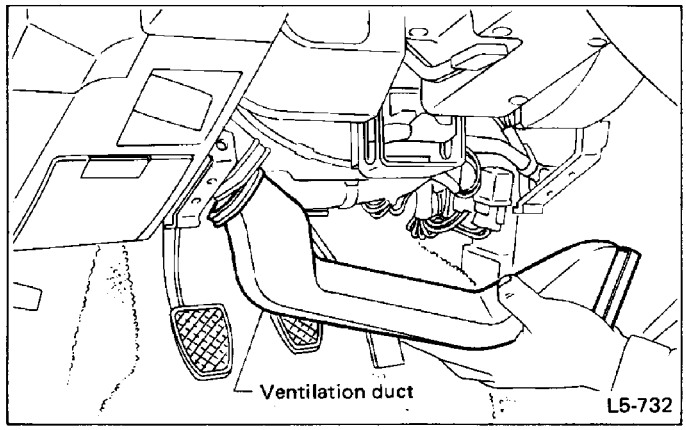

Fig. 4

3) Open fuse box lid. Remove screws which hold fuse box, and detach fuse box from instrument panel.

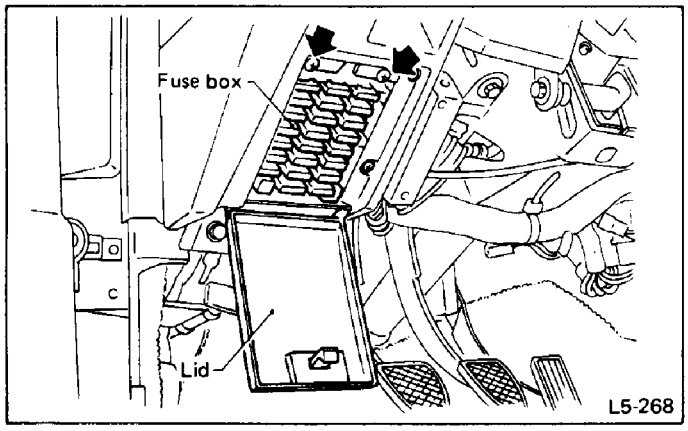

Fig. 5

4) Remove lower cover on passenger's side.

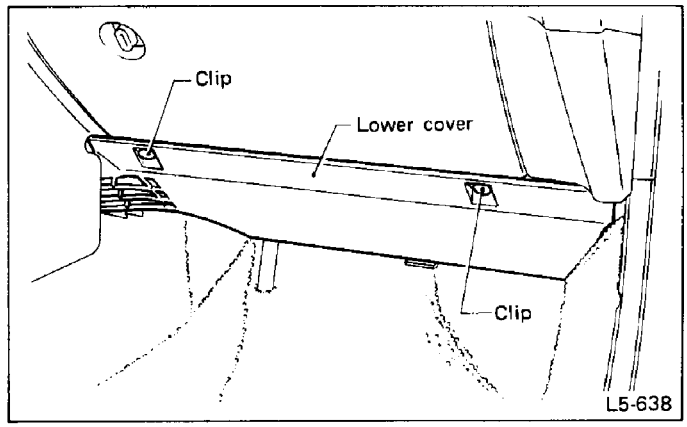

Fig. 6

5) Remove instrument panel upper cover by prying it with a standard screwdriver at three points (both sides and middle section).

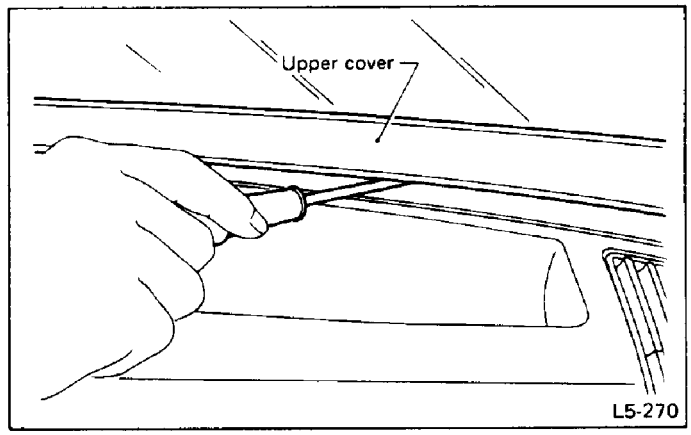

Fig. 7

6) Remove console box.

7) Remove steering shaft ASSY, combination meter and control wing as a unit.

8) Disconnect harness connectors from radio and other parts.

9) Remove eight bolts which hold instrument panel, and detach instrument panel.

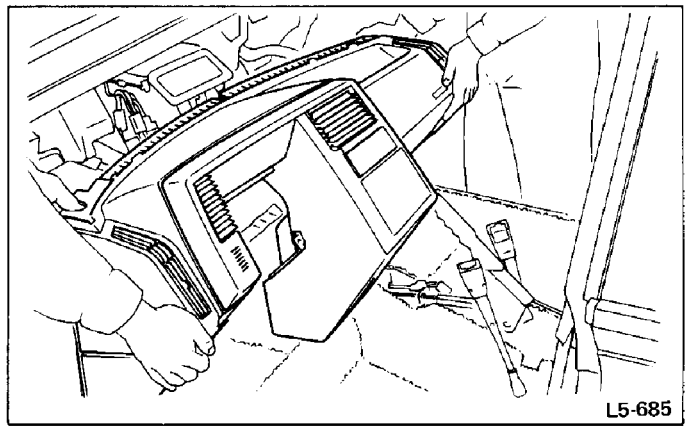

Fig. 8

INSTALLATION

Installation is in the reverse order of removal.
Observe the following:
1) Two persons should install instrument panel in vehicle. Be careful not to strike it against adjacent parts during installation.
2) While setting instrument panel in position, be careful not to obstruct air outlets of heater and blower with harness connectors.
Also, do not allow them to be caught between bracket and instrument panel.

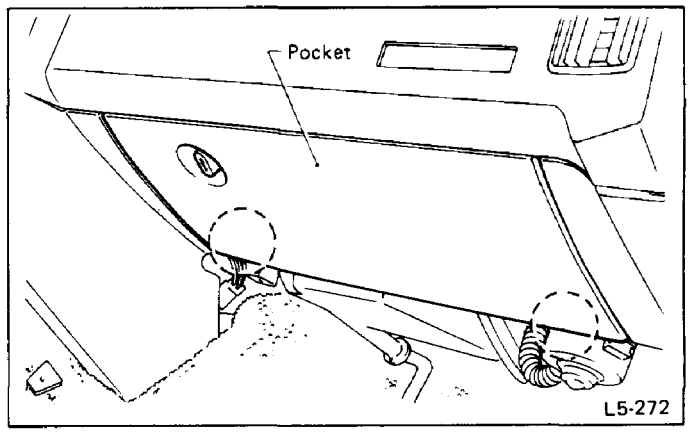

Fig. 9

Pocket

REMOVAL

1) Remove lower cover on passenger's side.
2) Remove screws which hold hinge located at the lower section of pocket.
3) Disengage lock from striker, remove pocket from instrument panel.

INSTALLATION

Installation is in the reverse order of removal.

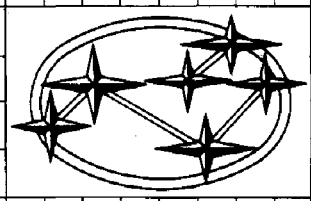

Publication No. G140BE ③
Issued: July 1987 A
Printed in Japan M-4.2

SUBARU®

XT

1988 SERVICE MANUAL

SECTION 6

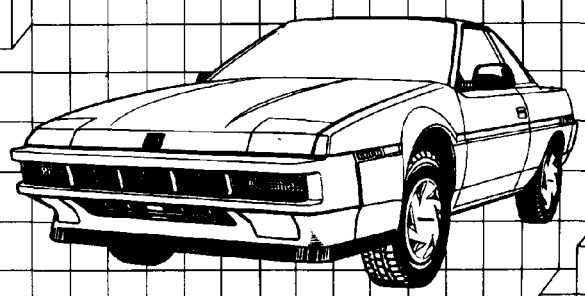

FUJI HEAVY INDUSTRIES LTD.

FOREWORD

This service manual has been prepared to provide SUBARU service personnel with the necessary information and data for the correct maintenance and repair of SUBARU XT.

The manual includes the procedures for maintenance, disassembling, reassembling, inspection and adjustment of components and trouble-shooting for guidance of both the fully qualified and the less-experienced mechanics.

Please peruse and utilize this manual fully to ensure complete repair work for satisfying our customers by keeping their vehicles in optimum condition. When replacement of parts during repair work is needed, be sure to use SUBARU genuine parts.

All information, illustrations and specifications contained in this manual are based on the latest product information available at the time of publication approval.

We reserve the right to make changes at any time without prior notice.

FUJI HEAVY INDUSTRIES LTD.

How to use this manual

This service manual is divided into four volumes. Each volume consists of Section 1, Section 2, 3, Section 4, 5, and Section 6 respectively.

Each chapter, beginning with the Engine section, is basically made up of the following five areas.

1. Mechanism and function
2. Specifications and service data
3. Component parts
4. Service procedure
5. Trouble-shooting

"ABBREVIATION LIST" is provided at the back page of quick reference index in each volume.

"ALPHABETICAL INDEX" is also provided at the last page in each volume.

This service manual applies to SUBARU XT, and explains all equipments including factory options. Therefore, you may find some explanations for equipments not installed on the vehicle.

SUBARU, and are registered trademarks of FUJI HEAVY INDUSTRIES LTD.
© Copyright 1987 FUJI HEAVY INDUSTRIES LTD. All rights reserved.

Not to be reproduced in whole or in part without the prior written permission
of FUJI HEAVY INDUSTRIES LTD., TOKYO JAPAN.

TABLE OF CONTENTS

1 GENERAL SECTION	1–1 Specifications 1–2 ★ ★ ★ ★ ★ ★ ★ ★ ★ ★ ★ ★ ★ 1–3 General Information 1–4 Pre-Delivery Inspection 1–5 Periodic Maintenance Services 1–6 Special Tools
2 ENGINE SECTION	2–1 Emission Control System and Vacuum Fitting 2–2 On-Car Services 2–3 Engine 2–4 Engine Lubrication System 2–5 Engine Cooling System 2–6 ★ ★ ★ ★ ★ ★ ★ ★ ★ ★ ★ ★ ★ 2–7 Fuel Injection System 2–8 Fuel System 2–9 Exhaust System 2–10 Clutch 2–11 Engine and Transmission Mounting System
3 TRANSMISSION AND DIFFERENTIAL SECTION	3–1 Manual Transmission and Differential 3–2 Automatic Transmission and Differential 3–3 Transmission Control System 3–4 4WD System
4 MECHANICAL COMPONENTS SECTION	4–1 Suspension 4–2 Wheels and Axles 4–3 Steering System 4–4 Brakes 4–5 Pedal System and Control Cables 4–6 Heater and Ventilator 4–7 Air Conditioning System
5 BODY SECTION	5–1 Body and Exterior 5–2 Doors and Windows 5–3 Seats, Seat Belts, and Interior 5–4 Instrument Panel
6 ELECTRICAL SECTION	6–1 Engine Electrical System 6–2 Body Electrical System 6–3 Wiring Diagram and Trouble-shooting

SUBARU

1988

SERVICE MANUAL

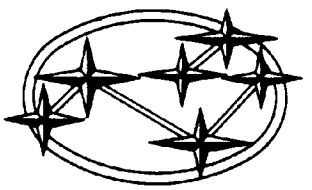

6 ELECTRICAL SECTION

ENGINE ELECTRICAL SYSTEM 6-1
BODY ELECTRICAL SYSTEM 6-2
WIRING DIAGRAM AND TROUBLESHOOTING 6-3

ABBREVIATION LIST

A/C pulley	Air Conditioner Pulley
A/D converter	Analog/Digital converter
ALT	Alternator
A/S	Air Suspension
ASSY	Assembly
ASV	Air Suction Valve
AT	Automatic Transmission
ATF	Automatic Transmission Fluid
AVG speed	Engine Average speed
BAT	Battery
Cal	California
CP	Complete
C/P	Crankshaft Pulley
DIFF. LOCK	Differential Lock
ECM	Electronic Control Module
ECS	Electric Control System
ECU	Electronic Control Unit
E/G	Engine
EGR	Exhaust Gas Recirculation
ETR	Electronic Tuning Radio
FCV	Float Chamber Ventilation
FICD	Fast Idle Control Device
FL	Front Left
FLT	Fluorescent
FR	Front Right
GND	Ground
IC	Integrated Circuit
IGN	Ignition
INT	Intermittent
I/P	Idler Pulley
LCD	Liquide-Crystal Display
LED	Light Emitting Diode
LH	Left-Hand
LSI	Large Scale Integrated Circuit
MPFI	Multi Point Fuel Injection
MPS	Motor Power Steering (Electronic-Controlled Motor Drive Power Steering)
MT	Manual Transmission
OD	Outer Diameter
P/S pulley	Power Steering Pulley
REV sensor	Revolution sensor
RH	Right-Hand
RL	Rear Left
RR	Rear Right
S/r	Single-range
SW	Switch
VLC	Vacuum Line Control
W/P pulley	Water Pump Pulley

INDEX

Alternator 6-1- 14
Analogue Meter 6-2- 21
Antenna 6-2- 45
Automatic Shoulder Belt and Key Warning Chime 6-2- 61
Automatic Transmission Control System 6-3-109
Back-up Light 6-3- 71
Battery 6-2- 12
Blower Motor 6-3-139
Brake Fluid Level Warning System 6-3-106
Clock 6-3-121
Combination Meter 6-2- 18
Combination Meter 6-3- 43
Combination Switch 6-2- 35
Common Grounding 6-3- 26
Control Wing 6-2- 36
Cruise Control 6-2- 48
Cruise Control System 6-3-133
Differential Lock Switch 6-2- 59
Digital Clock 6-2- 47
Distributor 6-1- 24
Door Lock System 6-3-130
Electronic-Controlled Motor Drive Power Steering Systrem 6-3- 91
Engine Electrical System 6-3- 39
Engine Wiring Harness 6-3- 12
First Hold Switch 6-2- 59
Fog Light Switch 6-2- 60
Front Fog Lamp 6-3- 66
Front Wiring Harness 6-3- 8
Fuse 6-2- 13
Headlight Washer 6-3-114
Horn 6-2- 47
Horn and Cigarette Lighter 6-3-118
Ignition Coil 6-1- 25
Ignition Switch 6-2- 34
Instrument Panel Wiring Harness 6-3- 14
Lighting System 6-3- 60
Mode Selector 6-3-138
Parking Brake System 6-3-105
Pneumatic Suspension System 6-3-140
Power Supply Routing 6-3- 36
Power Window 6-2- 56
Power Window 6-3-126
Power Window Main Harness and Door Cord 6-3- 24
Radio 6-2- 44
Radio and Auto Antenna 6-3-115
Rear Window Defogger 6-2- 47
Rear Window Defogger 6-3-122
Rear Wiring Harness 6-3- 18
Remote Controlled Rearview Mirror 6-2- 58
Remote Controlled Rearview Mirror 6-3-124
Retractable Headlight 6-2- 40
Room Light and Door Switch 6-3- 74
Seat Belt and Key Warning Chime 6-2- 62
Seat Belt and Key Warning System 6-3- 78
Spark Plug 6-1- 26
Speed Alarm 6-3-131
Speed Warning Buzzer 6-2- 60
Starter 6-1- 10
Stop Light 6-3- 72
Telltale (Graphic Monitor) 6-2- 20
Trip Computer 6-2- 24
Trip Computer 6-3- 57
Trunk Room Light 6-3- 77
Turn Signal and Hazard Warning Light 6-3- 67
Windshield Wiper & Washer 6-3-113
Wiper and Washer 6-2- 42
Wiper Intermittent Control System 6-2- 43
4WD-MT System 6-3-107

ENGINE ELECTRICAL SYSTEM

6-1

SUBARU

1988

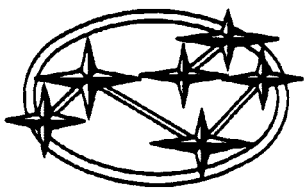

	Page
MECHANISM AND FUNCTION	2
Alternator (IC Regulator)	2
SPECIFICATIONS AND SERVICE DATA	3
COMPONENT PARTS	5
Starter	5
Alternator	6
Distributor	8
SERVICE PROCEDURE	10
Starter	10
Alternator	14
Distributor	24
Ignition Coil	25
Spark Plug	26
TROUBLESHOOTING	28
Alternator	28

MECHANISM AND FUNCTION

Alternator (IC Regulator)

The internal circuitry of the IC regulator is very complicated.
It consists of the following circuits.

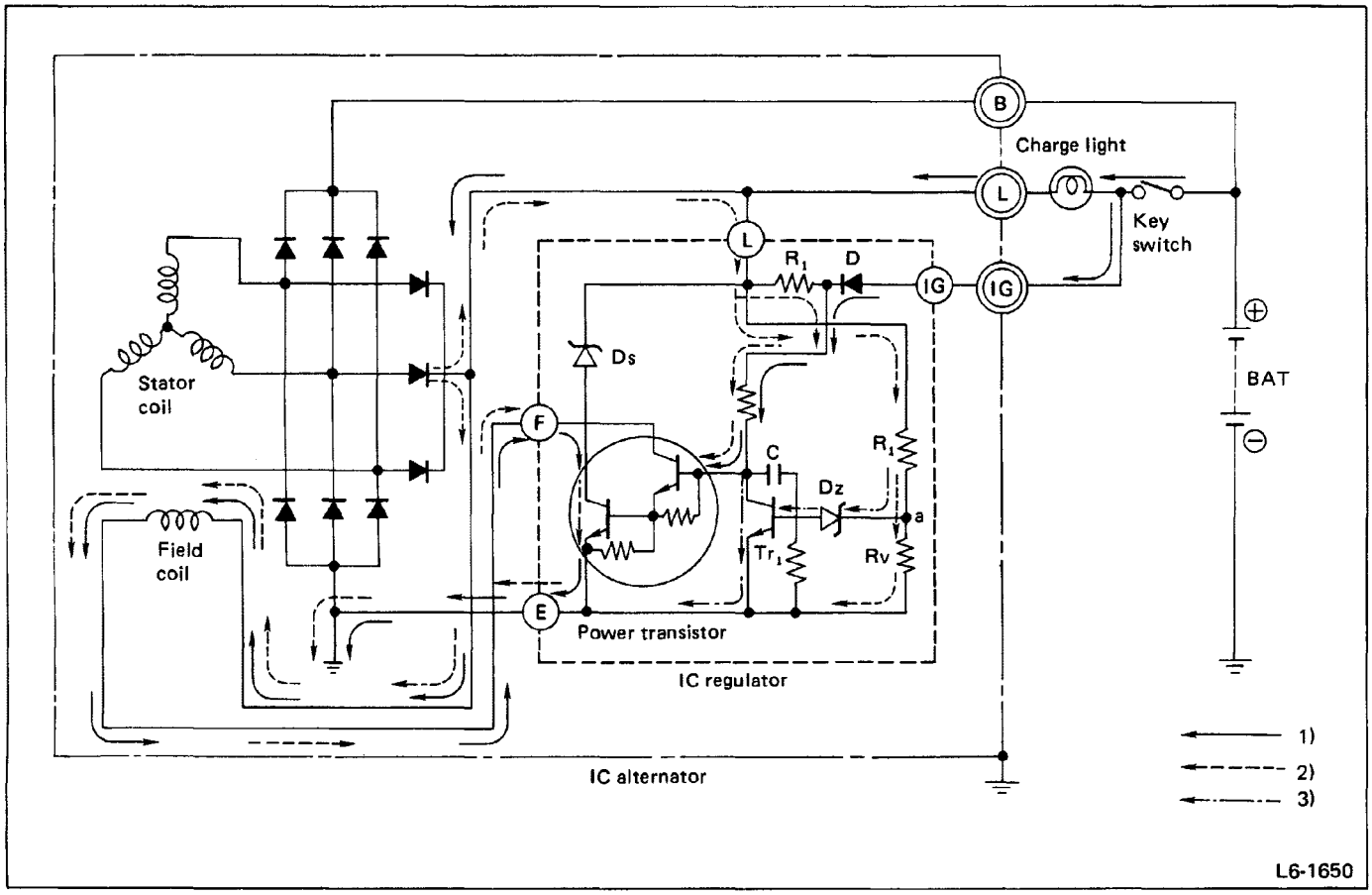

Fig. 1

1) Ignition switch ON (When engine is stopped)
When the ignition switch is turned "ON", the charge light comes on and electric current (less than 0.5A) flows through the field coil.
If the charge light does not come on when the switch is turned "ON", it may be due to a burned-out charge light, a break in the field coil, a defective IC regulator, or improper contact or wear of the brushes.

2) When the IC alternator produces voltage (below regulation voltage)
When the IC alternator starts to generate, the charge light goes out because the voltage at both ends of the light is equal. On the other hand, field current is supplied from the diode. When voltage at connection (a) of Rv·R_1 (the voltage-dividing resistors which divide the voltage at the voltage detection terminal Ⓛ) is low, no current flows in Zener diode Dz and transistor Tr_1 is off. Therefore, the power transistor is on, allowing field current to flow.
Even in this condition, if the voltage at terminal Ⓑ exceeds battery voltage, charging current flows to the battery.

3) When the IC alternator produces voltage (above regulation voltage)
As the condition in 2) continues, voltage at terminal Ⓛ builds up. Therefore, voltage at connection (a) increases. When this voltage exceeds the voltage at which the Zener diode Dz conducts, current flows through Dz and the transistor Tr_1. The voltage at terminal Ⓛ at this time is called regulation voltage (14.0 to 15.0V). In this condition, the power transistor is off because Tr_1 is on.

4) The alternator supplies electric current, repeating operations 2) and 3) to stabilize the voltage.

SPECIFICATIONS AND SERVICE DATA

SPECIFICATIONS

Item			1800 cc model		2700 cc model	
Starter	Type		Reduction type			
	Model		[MT] MIT70381	[AT] MIT74081	[MT] MIT70381	[AT] MIT74081
	Manufacturer		MITSUBISHI			
	Voltage and Output		12V - 1.0 kW	12V - 1.4 kW	12V - 1.0 kW	12V - 1.4 kW
	Direction of rotation		Counterclockwise (when observed from pinion)			
	Number of pinion teeth		8	9	8	9
	No-load characteristics	Voltage	11V			
		Current	90A or less			
		Rotating speed	3,000 rpm or more	2,900 rpm or more	3,000 rpm or more	2,900 rpm or more
	Load characteristics	Voltage	8V			
		Current	280A or less	370A or less	280A or less	370A or less
		Torque	8.5 N·m (0.87 kg-m, 6.3 ft-lb)	14 N·m (1.4 kg-m, 10 ft-lb)	8.5 N·m (0.87 kg-m, 6.3 ft-lb)	14 N·m (1.4 kg-m, 10 ft-lb)
		Rotating speed	980 rpm or more	880 rpm or more	980 rpm or more	880 rpm or more
	Lock characteristics	Voltage	4V			
		Current	780A or less	980A or less	780A or less	980A or less
		Torque	18 N·m (1.8 kg-m, 13 ft-lb) or more	25 N·m (2.6 kg-m, 19 ft-lb) or more	18 N·m (1.8 kg-m, 13 ft-lb) or more	25 N·m (2.6 kg-m, 19 ft-lb) or more
Alternator	Type		Rotating-field three-phase type, Voltage regulator built-in type			
	Model		LR165-704		A3T01691	
	Regulator type		TR1Z-219		A866X06272	
	Manufacturer		HITACHI		MITSUBISHI	
	Voltage and Output		12V - 65A		12V - 90A	
	Polarity on ground side		Negative			
	Rotating direction		Clockwise (when observed from pulley side)			
	Armature connection		3-phase Y-type			
	Rectifying system		Full wave rectification by eight self-contained silicone diodes			
	Output current		1,600 rpm - 22A or more 3,000 rpm - 53A or more 6,000 rpm - 63A or more		1,500 rpm - 27A or more 2,500 rpm - 62A or more 5,000 rpm - 83A or more	
	Regulated voltage		14.1 – 14.8V [20°C (68°F)]		14.2 – 14.8V [20°C (68°F)]	

Item		1800 cc model	2700 cc model
Distributor	Type	Breakerless type with control unit	
	Model	D4P86-03	D6P86-02
	Manufacturer	HITACHI	
	Firing order	1-3-2-4	1-6-3-2-5-4
	Rotating direction	Counterclockwise	
	Cap insulation resistance	More than 50 MΩ	
	Rotor head insulation resistance	More than 50 MΩ	
Ignition coil	Type	E12-113	
	Manufacturer	HITACHI	
	Primary coil resistance Ω	0.84 – 1.02	
	Secondary coil resistance Ω	8,000 – 12,000	
	Insulation resistance between primary terminal and case	More than 10 MΩ	
Spark plug	Type and Manufacturer	For U.S.A.: BPR6ES-11 (or BPR5ES-11, BPR7ES-11) ..... NGK W20EPR-U11 (or W16EPR-U11, W22EPR-U11) ... Nippondenso RN9YC-4 (or RN11YC-4) ..... Champion For Canada: RN9YC-4 (or RN11YC-4) ..... Champion	
	Thread size mm	14, P = 1.25	
	Spark gap mm (in)	1.0 – 1.1 (0.039 – 0.043)	

COMPONENT PARTS

Starter

MT: MIT70381
AT: MIT74081

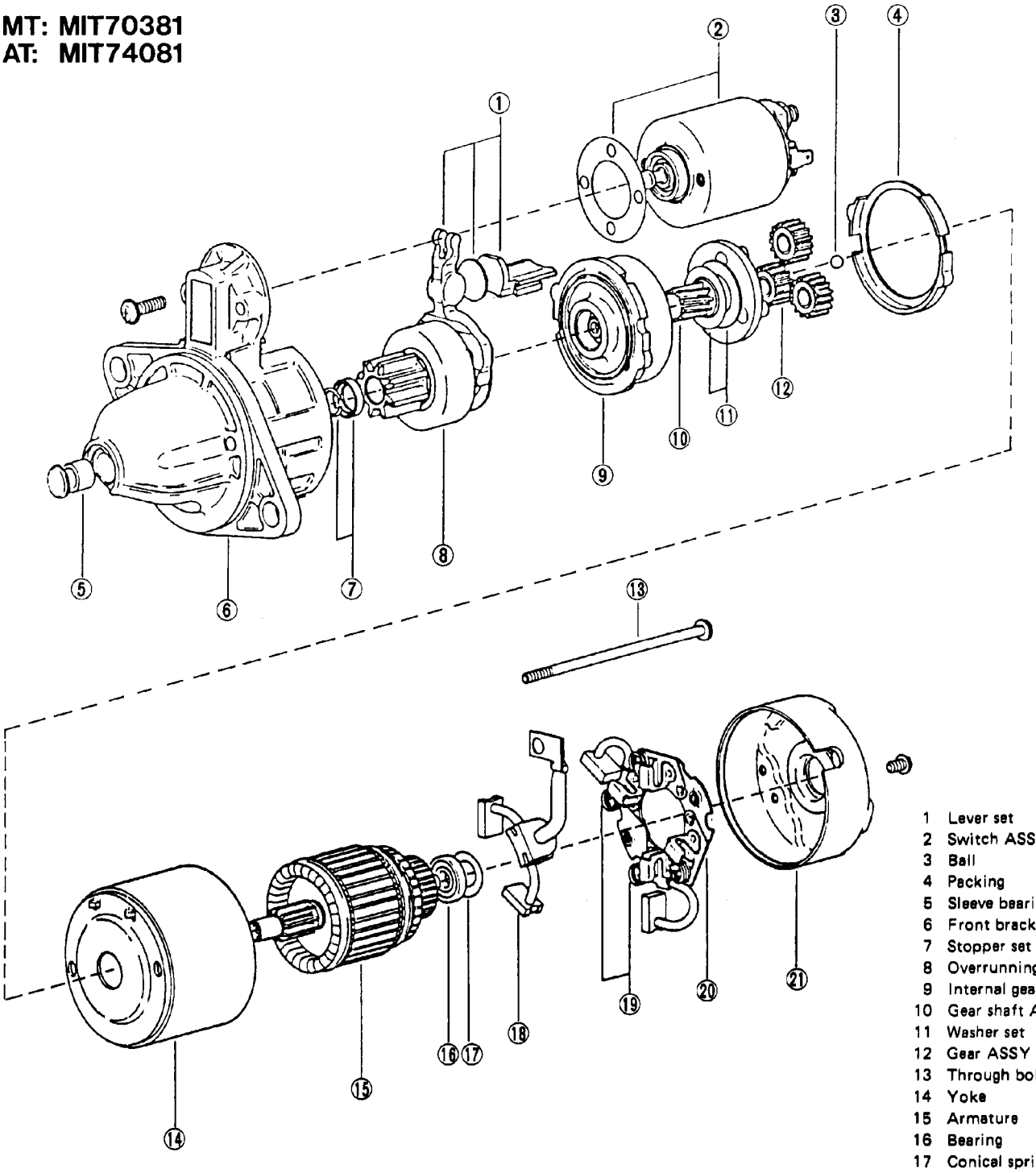

1 Lever set
2 Switch ASSY
3 Ball
4 Packing
5 Sleeve bearing
6 Front bracket
7 Stopper set
8 Overrunning clutch
9 Internal gear ASSY
10 Gear shaft ASSY
11 Washer set
12 Gear ASSY
13 Through bolt
14 Yoke
15 Armature
16 Bearing
17 Conical spring washer
18 Brush ASSY
19 Brush set spring
20 Brush holder
21 Rear bracket

Fig. 2

L6-1456

Alternator

1800cc model

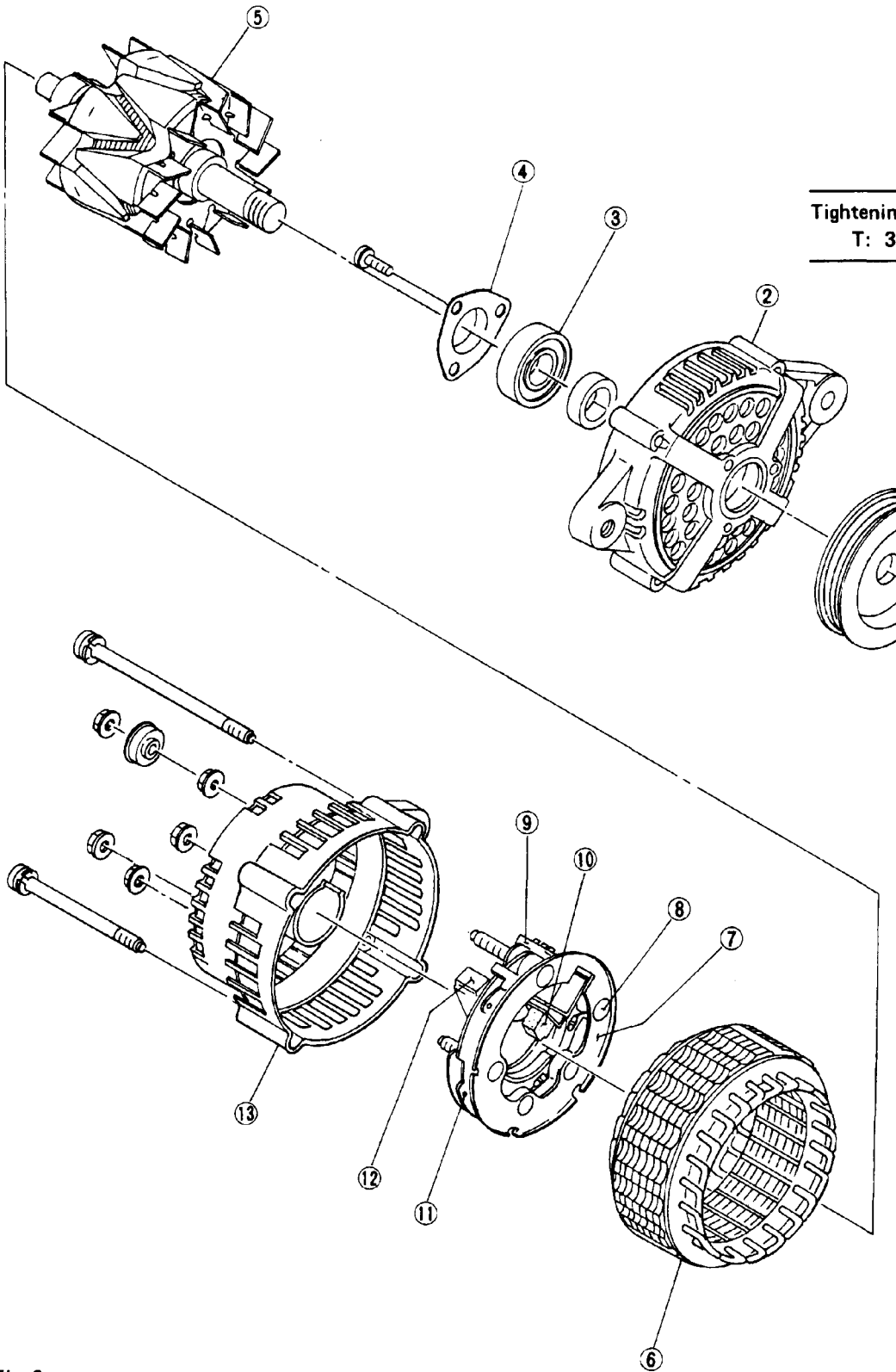

Fig. 3

2700cc model

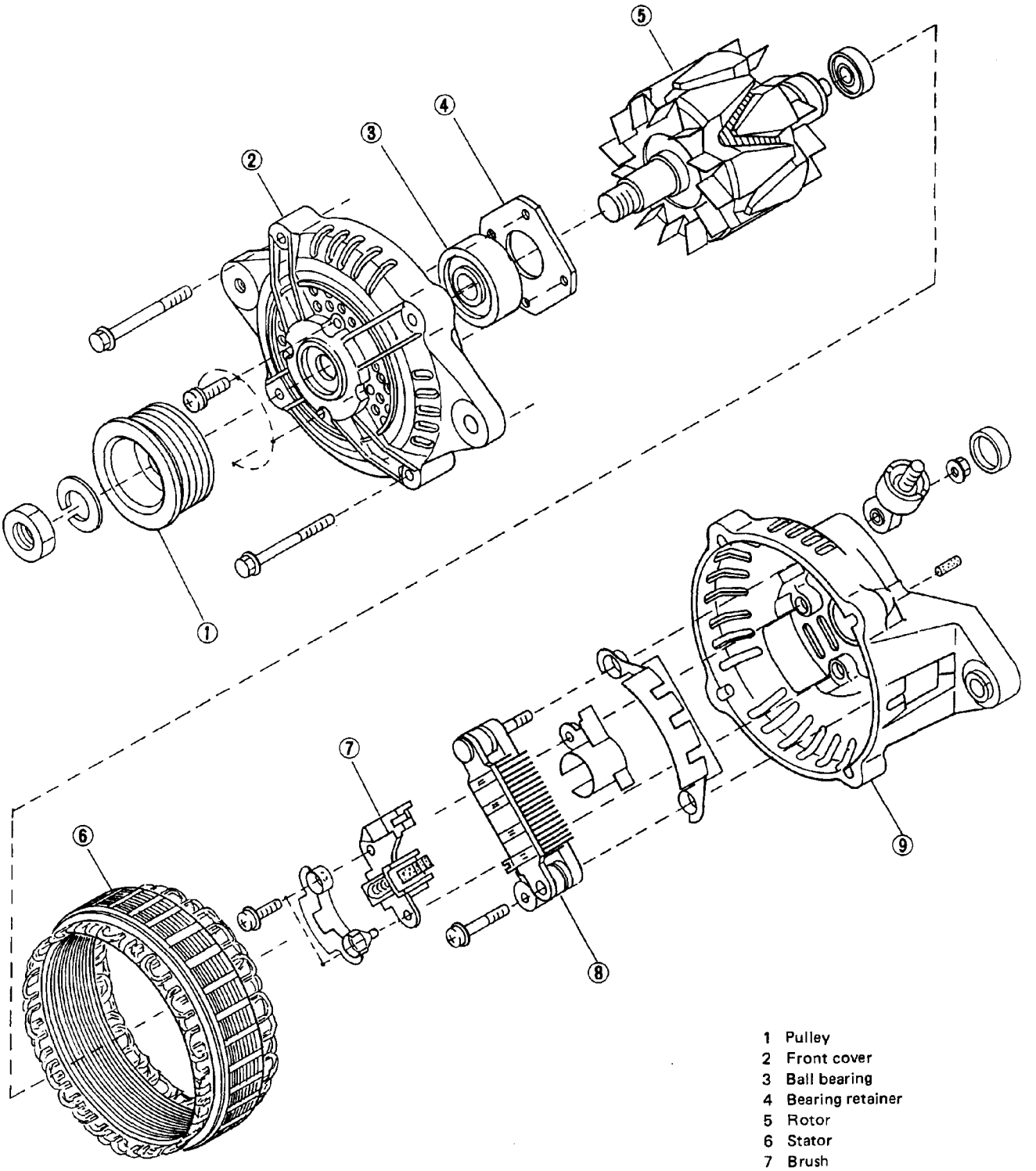

Fig. 4

L6-1651

Distributor

1800cc model

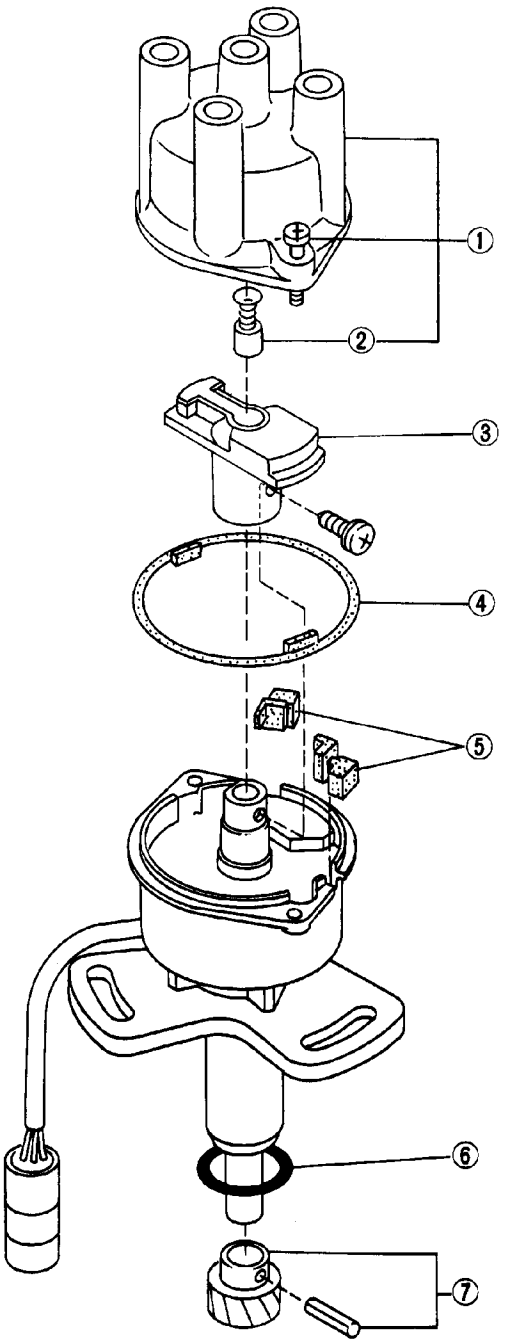

1 Cap ASSY
2 Carbon point ASSY
3 Rotor head
4 Packing
5 Bush
6 O-ring
7 Pinion set

Fig. 5

L6-1457

2700cc model

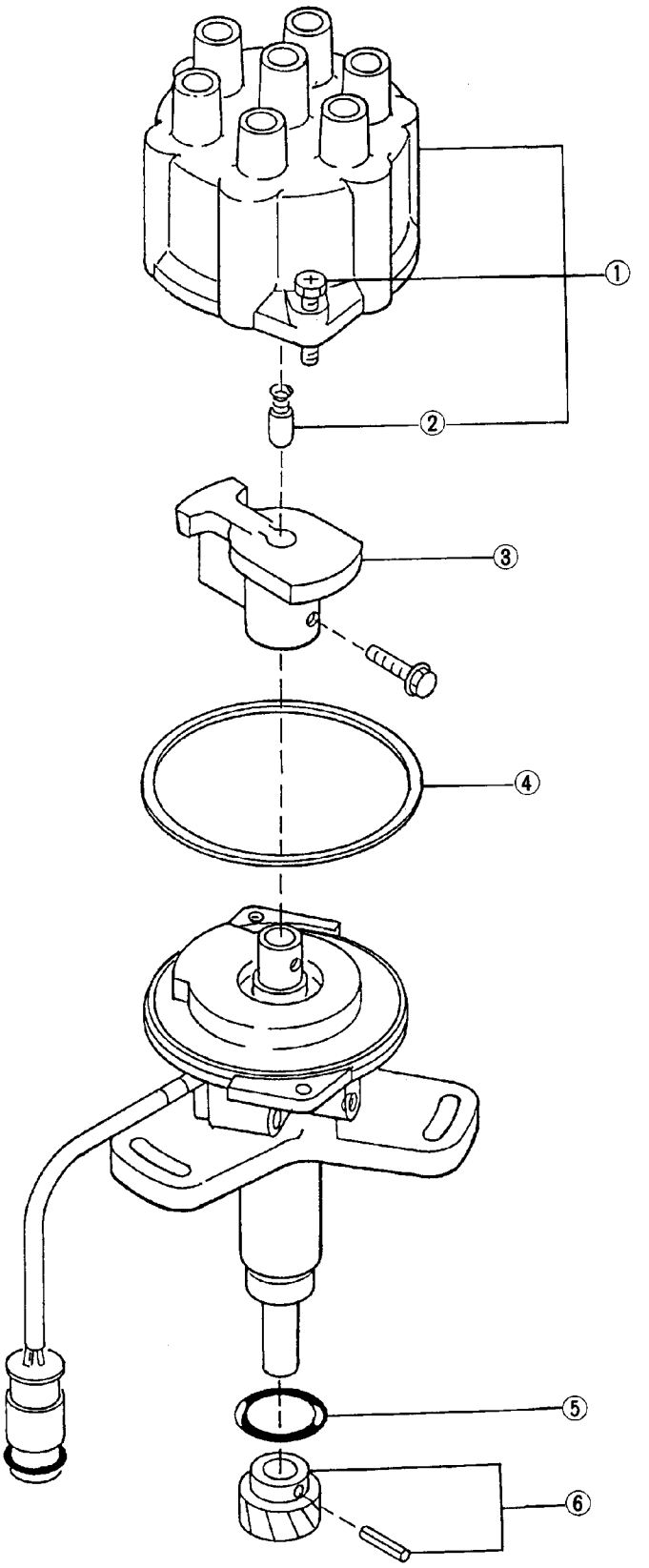

1 Cap ASSY
2 Carbon point ASSY
3 Rotor head
4 Packing
5 O-ring
6 Pinion set

Fig. 6

L6-1652

SERVICE PROCEDURE

Starter

TEST

SWITCH ASSEMBLY OPERATION

1) Connect terminal S of switch ASSY to positive terminal of battery with a lead wire, and starter body to ground terminal of battery. Pinion should be forced endwise on shaft.

With pinion forced endwise on shaft, starter motor can sometimes rotate because current flows, through pull-in coil, to motor. This is not a problem.

2) Disconnect connector from terminal M, and connect positive terminal of battery and terminal M using a lead wire and ground terminal to starter body.
In this test setup, pinion should return to its original position even when it is pulled out with a screwdriver.

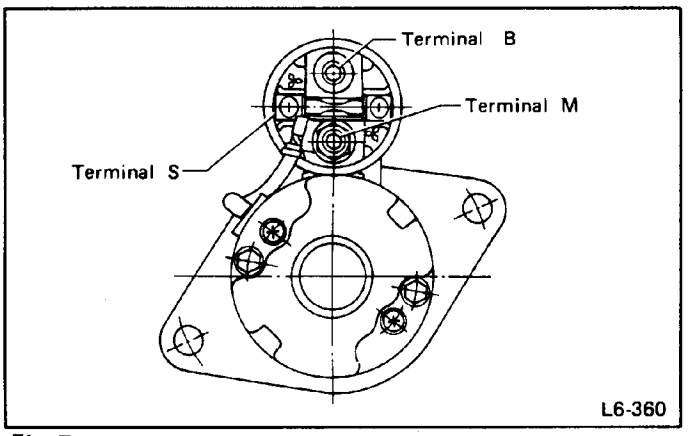

Fig. 7

PINION GAP

1) With pinion forced endwise on shaft, as outlined in step 1) above, measure pinion gap.

Pinion gap:
0.5 – 2.0 mm (0.020 – 0.079 in)

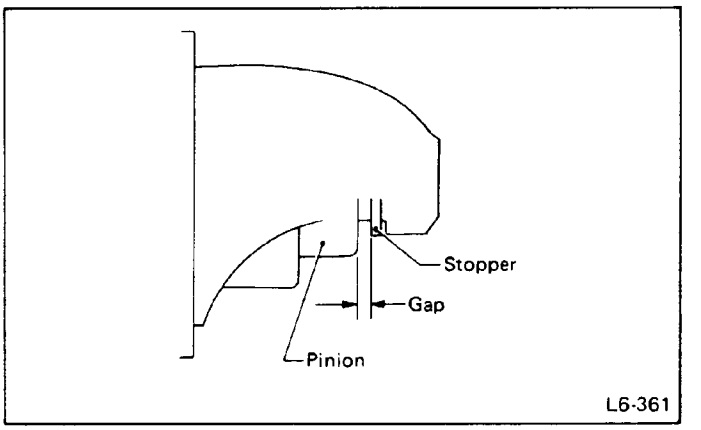

Fig. 8

If motor is running with the pinion forced endwise on the shaft, disconnect connector from terminal M of switch ASSY and connect terminal M to ground terminal (–) of battery with a lead wire. Next, gently push pinion back with your fingertips and measure pinion gap.
2) If pinion gap is outside specified range, remove or add number of adjustment washers used on the mounting surface of switch ASSY until correct pinion gap is obtained.

PERFORMANCE TEST

The starter should be submitted to performance tests whenever it has been overhauled, to assure its satisfactory performance when installed on the engine.
Three performance tests, no-load test, load test, and lock test, are presented here; however, if the load test and lock test cannot be performed, carry out at least the no-load test.
For these performance tests, use the circuit shown in figure.

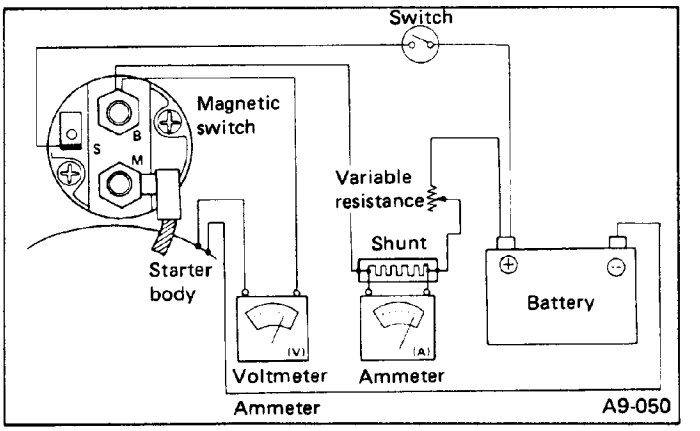

Fig. 9

1) No-load test
With switch on, adjust the variable resistance to obtain 11V, take the ammeter reading and measure the starter speed. Compare these values with the specifications.

No-load test (Standard):
Voltage/Current
11V/90A max
Rotating speed
MT 3,000 rpm min
AT 2,900 rpm min

2) Load test
Apply the specified braking torque to starter. The condition is satisfactory if the current draw and starter speed are within specifications.

Load test (Standard):
Voltage/Load
MT 8V/8.5 N·m (0.87 kg-m, 6.3 ft-lb)
AT 8V/14 N·m (1.4 kg-m, 10 ft-lb)
Current/Speed
MT 280A max/980 rpm min
AT 370A max/880 rpm min

3) Lock test
With starter stalled, or not rotating, measure the torque developed and current draw when the voltage is adjusted to the specified voltage.

Lock test (Standard):
Voltage/Current
MT 4V/780A max
AT 4V/980A max
Torque
MT 18 N·m (1.8 kg-m, 13 ft-lb) min
AT 25 N·m (2.6 kg-m, 19 ft-lb) min

DISASSEMBLY

1) Loosen nut which holds terminal M of switch ASSY, and disconnect connector.
2) Remove bolts which hold switch ASSY, and remove switch ASSY, plunger and plunger spring from starter as a unit.

Be careful because pinion gap adjustment washer may sometimes be used on the mounting surface of switch ASSY.

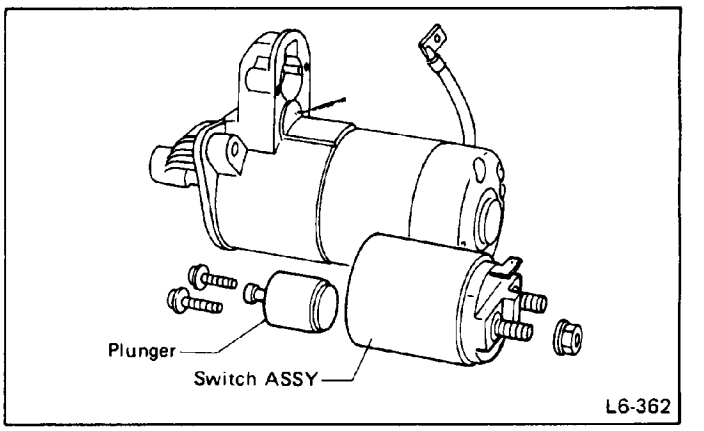

Fig. 10

3) Remove both through-bolts and brush holder screws, and detach rear bracket and brush holder.

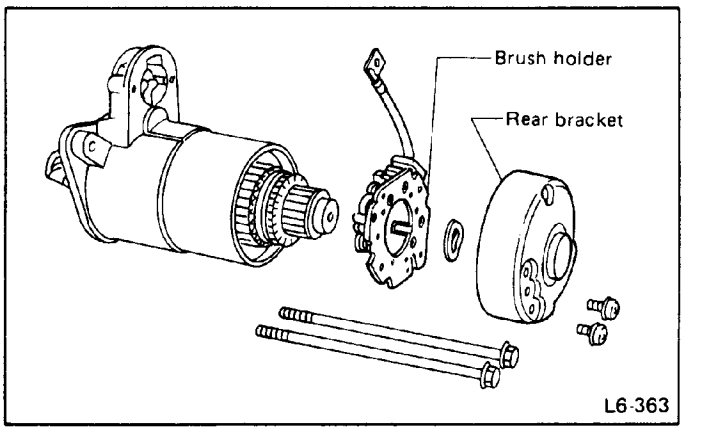

Fig. 11

4) Remove armature and yoke. Ball used as a bearing will then be removed from the end of armature.

Be sure to mark an alignment mark on yoke and front bracket before removing yoke.

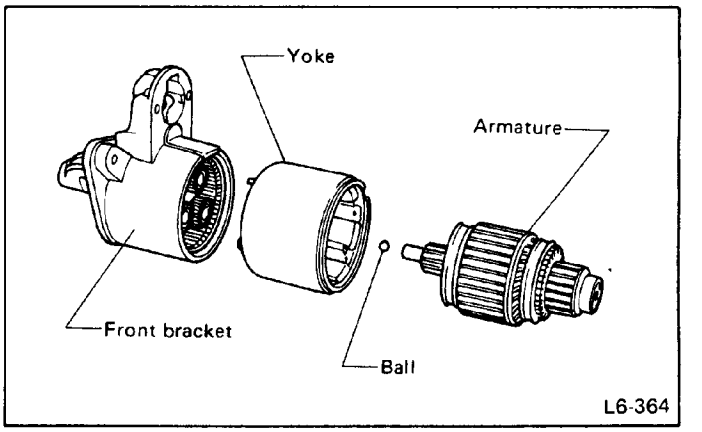

Fig. 12

5) Remove packing A, three planetary gears, packing B and plate.

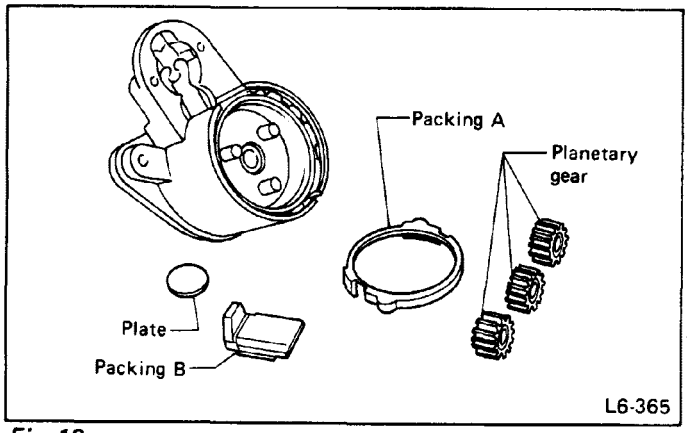

Fig. 13

6) Remove shaft ASSY and overrunning clutch as a unit.

Record the direction of lever before removing.

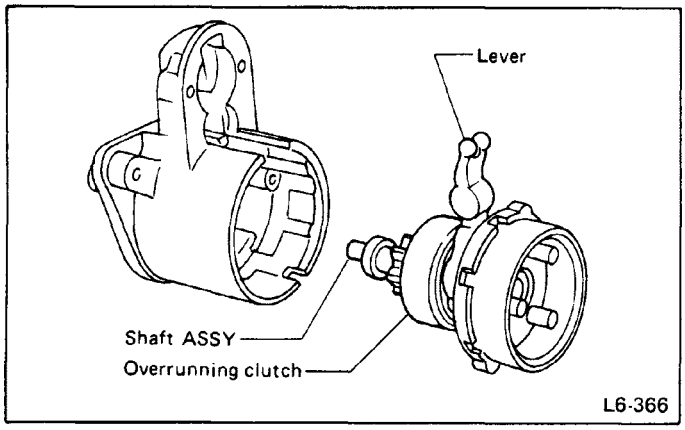

Fig. 14

7) Remove overrunning clutch from shaft ASSY as follows:
(1) Remove stopper from ring by lightly tapping a jig placed on stopper.
(2) Remove ring, stopper and clutch from shaft.

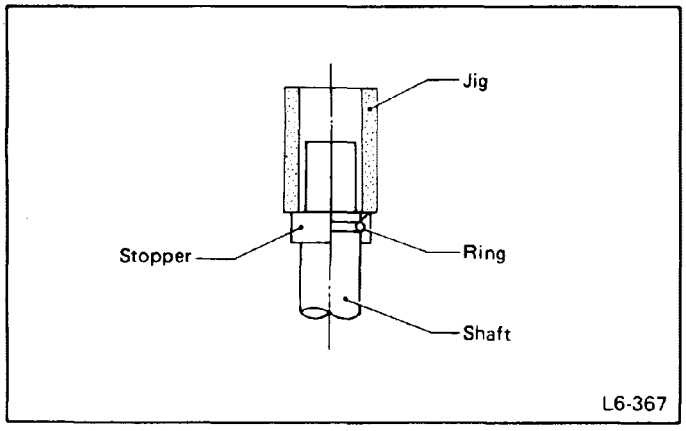

Fig. 15

INSPECTION

ARMATURE

1) Check commutator for any sign of burns of rough surfaces or stepped wear. If wear is of a minor nature, correct it by using sandpaper.
2) Run-out test
Check the commutator run-out and replace if it exceeds the limit.

Commutator run-out:
Standard
0.05 mm (0.0020 in)
Service limit
Less than 0.10 mm (0.0039 in)

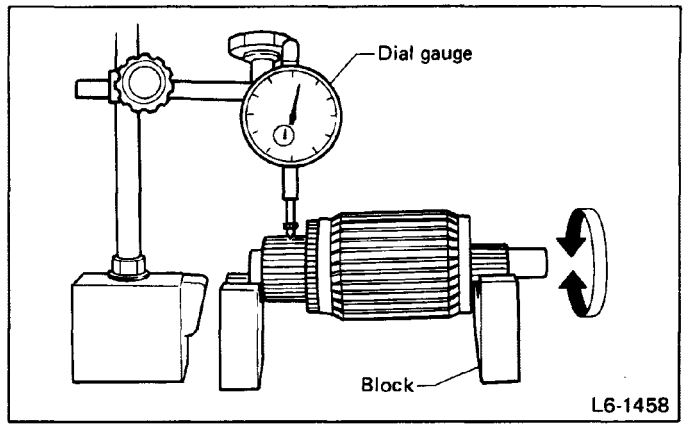

Fig. 16

3) Depth of segment mold
Check the depth of segment mold.

Depth of segment mold
0.5 – 0.8 mm (0.020 – 0.031 in)

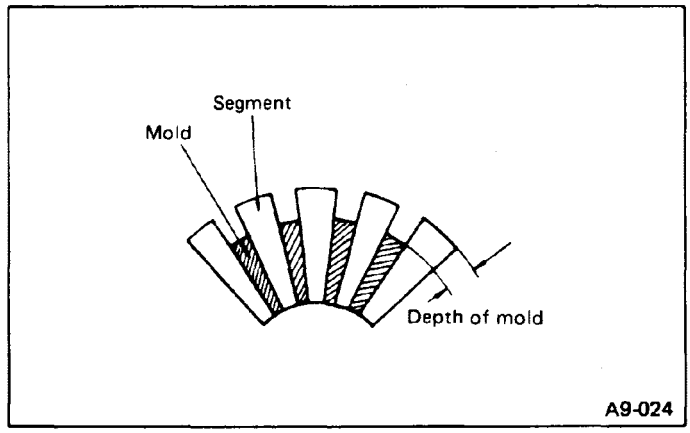

Fig. 17

4) Armature short circuit test
Check armature for short circuit by placing it on growler tester. Hold a hacksaw blade against armature core while slowly rotating armature. A short-circuited armature will cause the blade to vibrate and to be attracted to core. If the hacksaw blade is attracted or vibrates, the armature, which is short-circuited, must be replaced or repaired.

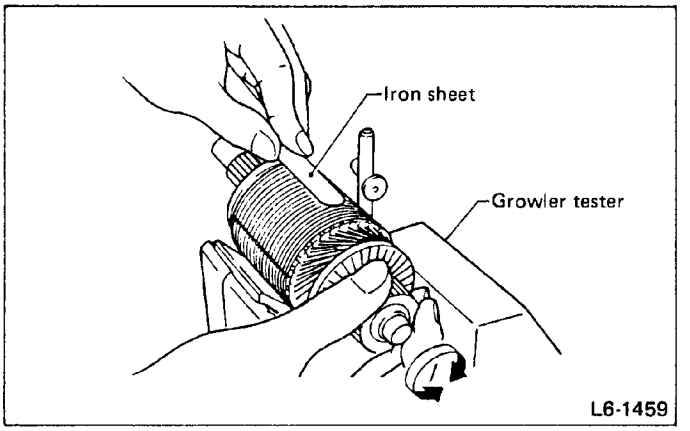

Fig. 18

5) Armature ground test
Using circuit tester, touch one probe to the commutator segment and the other to shaft. There should be no continuity. If there is a continuity, armature is grounded.
Replace armature if it is grounded.

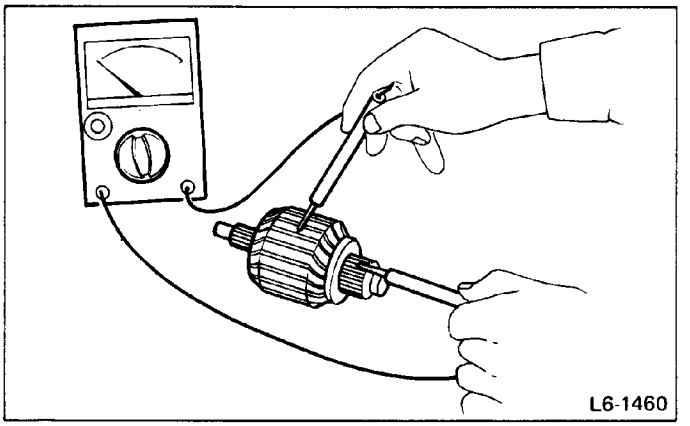

Fig. 19

YOKE

Make sure pole is set in position.

OVERRUNNING CLUTCH

Inspect teeth of pinion for wear and damage. Replace it if damaged. Rotate pinion in direction of rotation (clockwise). It should rotate smoothly. But in opposite direction, it should be locked.

Do not clean overrunning clutch with oil to prevent grease from flowing out.

BRUSH AND BRUSH HOLDER

1) Brush length
Measure the brush length and replace if it exceeds the service limit.
Replace if abnormal wear or cracks are noticed.

Brush length:

MIT 70381		
	Standard	**17.0 mm (0.669 in)**
	Service limit	**11.5 mm (0.453 in)**
MIT 74081		
	Standard	**17.5 mm (0.689 in)**
	Service limit	**12.0 mm (0.472 in)**

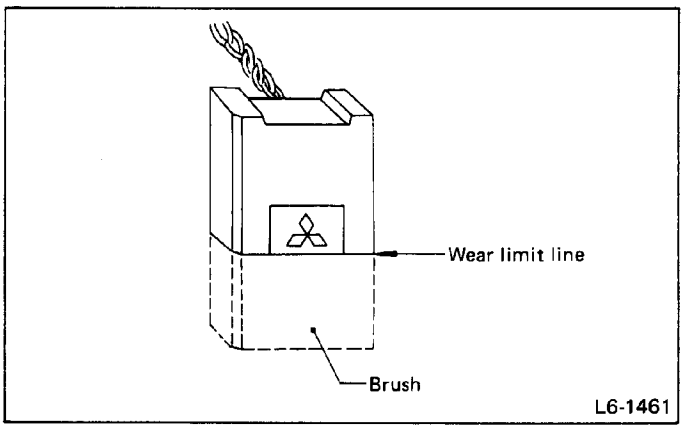

Fig. 20

2) Brush movement
Be sure brush moves smoothly inside brush holder.
3) Insulation resistance of brush holder
Be sure there is no continuity between brush holder and its plate.

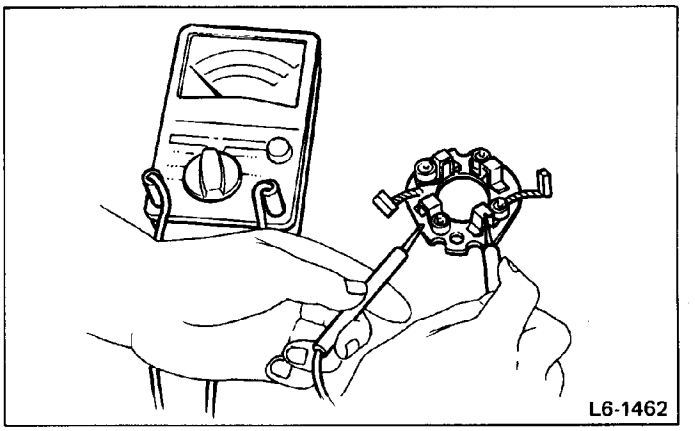

Fig. 21

4) Brush spring force
Measure brush spring force with a spring scale. If it is less than the service limit, replace brush spring.

Brush spring force:
Standard
18.6 N (1.9 kg, 4.2 lb) (when new)
Service limit
6.9 N (0.7 kg, 1.5 lb)

SWITCH ASSEMBLY

Be sure there is continuity between terminals S and M, and between terminal S and body ground. Use a circuit tester (set in "ohm").
Also check to be sure there is no continuity between terminal M and B.

Terminal	
S – M	Continuity
S – Body ground	Continuity
M – B	No continuity

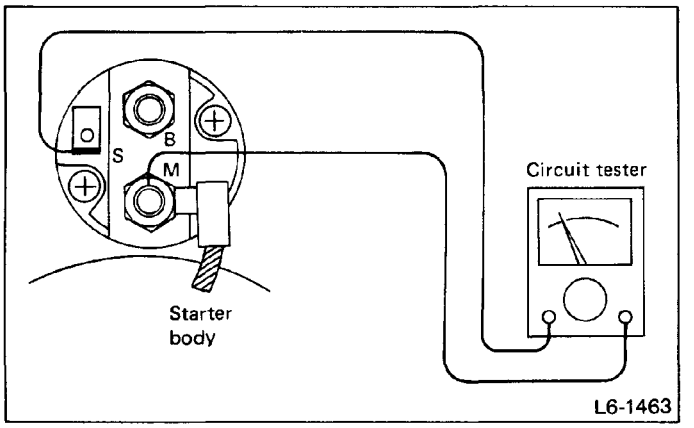

Fig. 22

ASSEMBLY

Assembly is in the reverse order of disassembly procedures. Observe the following:
1) Carefully assemble all parts in the order of assembly and occasionally inspect nothing has been overlooked.
2) Apply grease to the following parts during assembly.
- Front bracket sleeve bearing
- Armature shaft gear
- Outer periphery of plunger
- Mating surface of plunger and lever
- Gear shaft splines
- Mating surface of lever and clutch
- Ball at the armature shaft end
- Internal and planetary gears

3) After assembling parts correctly, check to be sure starter operates properly.

Alternator

1800cc model

TEST

Notes on alternator test:
a) The lead wires between alternator terminal B and battery positive terminal, and between alternator terminal L and battery negative terminal must be less than 2.5 m (8.2 ft) in length and greater than 8 mm² (0.012 sq in) in section area.
b) The switch used in the circuit must have as small a contact resistance as possible.

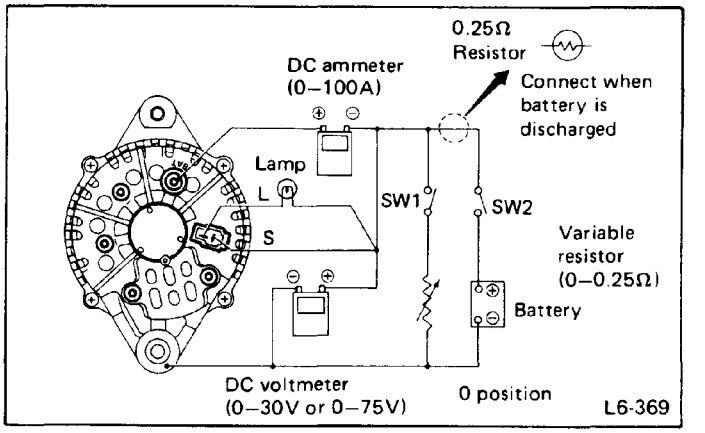

Fig. 23

Measuring regulated voltage

Open switch SW1 and close switch SW2 in the circuit shown above to raise the alternator speed to the rated speed of 6,000 rpm, and measure the voltage on the voltmeter.
The regulated voltage must be 14.1 to 14.8 V.

Measuring output current

Set the variable resistor to the 0Ω position, and close switches SW1 and SW2 to raise the alternator speed to the rated rpm. At this rpm, adjust the variable resistor so that the voltmeter reads 13.5 V, and read the indication on the ammeter.

1,600 rpm	22 A or more
3,000 rpm	53 A or more
6,000 rpm	63 A or more

DISASSEMBLY

1) Remove the through-bolt. Pressing the tip of a standard screwdriver into the clearance between the front cover and stator core, pry the alternator into two parts; front side (front cover and rotor) and rear side (rear cover and stator).

Use care not to damage the stator coil with the screwdriver.

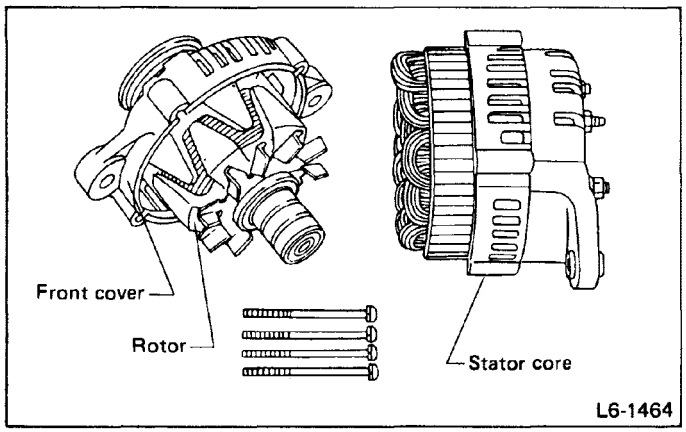

Fig. 24

2) Secure the rotor in a vise, and remove the pulley nut. The pulley, front cover and rotor can be separated.

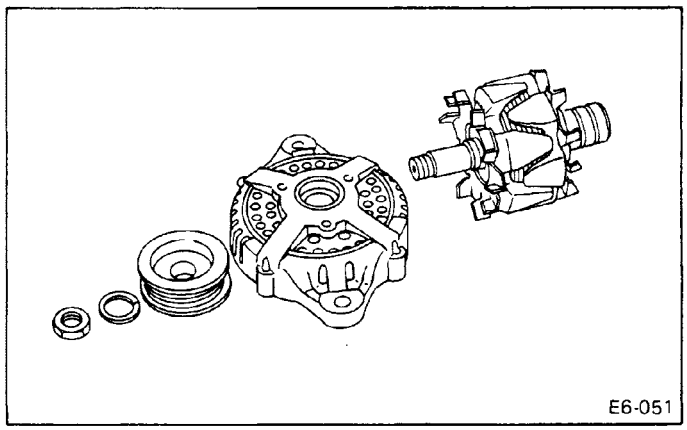

Fig. 25

3) Remove the screws securing the bearing retainer, and remove the bearing retainer, ball bearing and front cover.

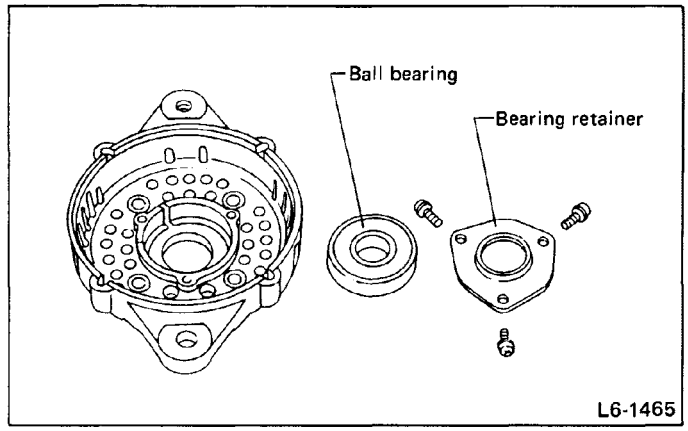

Fig. 26

4) Remove the nuts securing the BAT terminal, diode and brush holder. Separate the rear cover from the stator.

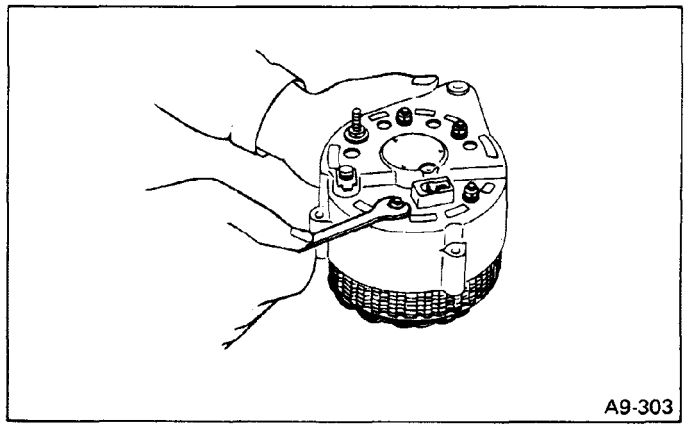

Fig. 27

5) Unsolder the diode ASSY and remove the stator.

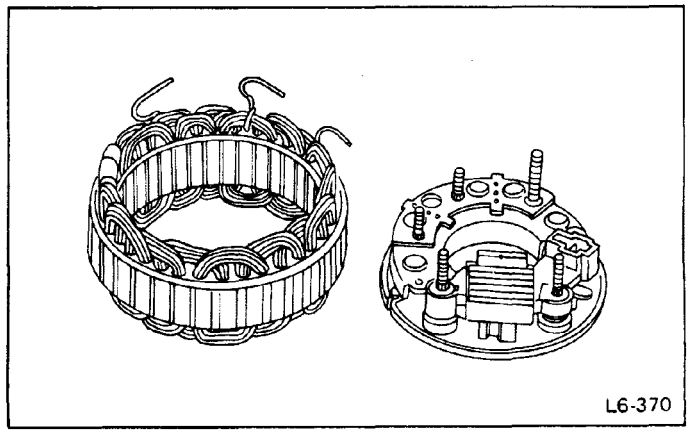

Fig. 28

6) Remove the nuts securing the fan guide, and remove the fan guide.

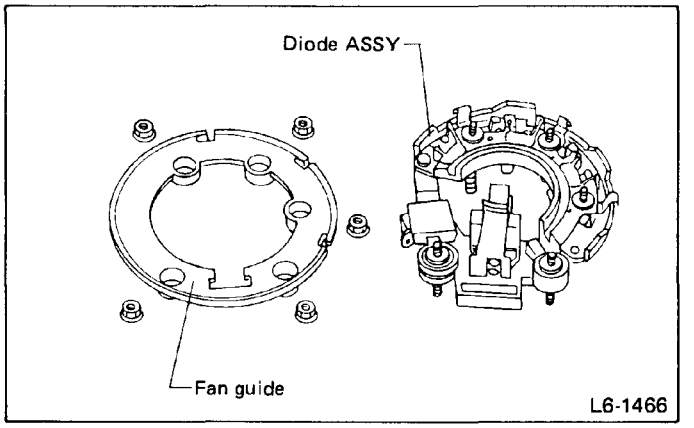

Fig. 29

7) (This procedure is unnecessary when the diode is normal.) Cut off rivet which holds diode ASSY to brush holder terminals with a drill. Unsolder terminal L and brush holder, and remove brush holder and IC regulator from diode ASSY as a unit.

a) Brush holder and IC regulator are a one-piece type. Be careful not to apply shocks or load to cooling fin.
b) Do not remove rivet unless diode is replaced.

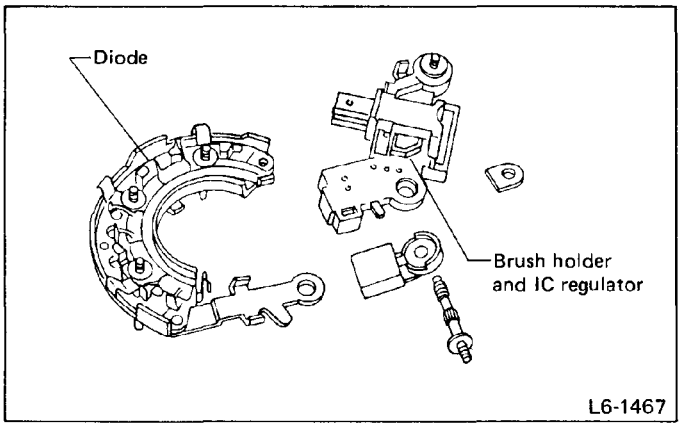

Fig. 30

INSPECTION AND REPAIR

DIODE

Checking positive side diodes.

Terminal		BAT (Positive side diode)	
	Tester lead	Positive ⊕	Negative ⊖
U V W	Positive ⊕	–	No continuity
	Negative ⊖	Continuity	–

Checking negative side diodes

Terminal		E (Negative side diode)	
	Tester lead	Positive ⊕	Negative ⊖
U V W	Positive ⊕	–	Continuity
	Negative ⊖	No continuity	–

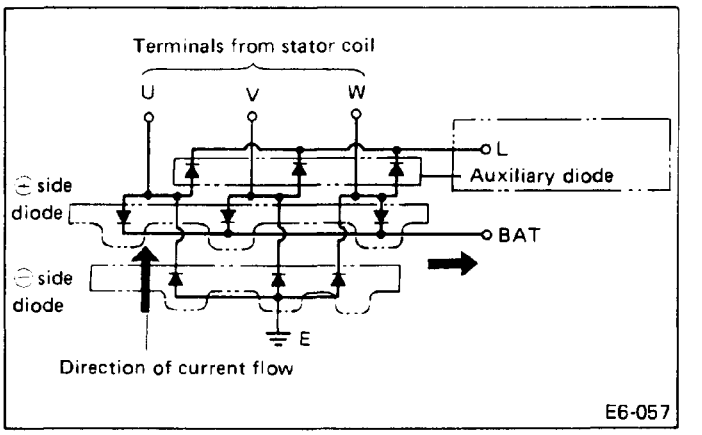

Fig. 31

The diode allows current to flow in only one direction as shown in the figure. If continuity is noted when connecting tester leads in the normal direction (for example, BAT and W), the diode is normal; if no continuity is noted, the diode is faulty. On the contrary, if tester leads are connected in the reverse direction, no continuity means a normal diode, while continuity means a faulty diode.
If any diode is proven faulty in the above check, repoace the diode assembly. The auxiliary diode have no terminals, and must be checked for continuity by connecting tester leads to both terminals of this diode.

Never use a megger or other high voltage insulation tester for this test; otherwise, diodes may be damaged.

ROTOR

1) Slip ring wear limit
Measure the outer diameter of the slip ring. If worn more than 1 mm (0.04 in) from the standard dimension, replace the rotor assembly.

Outer diameter of slip ring:
Standard
27.0 mm (1.063 in)
Wear limit:
26.0 mm (1.024 in)

2) Checking slip ring surface
Check the slip ring surface for roughness or contamination with oil. If the surface is rough, smoothen with sandpaper (#500 – #600). If contaminated with oil, wipe with clean cloth moistened with alcohol.
3) Checking rotor coil for continuity
Check the rotor coil for continuity between slip rings using a circuit tester. If no continuity is detected, replace the rotor.

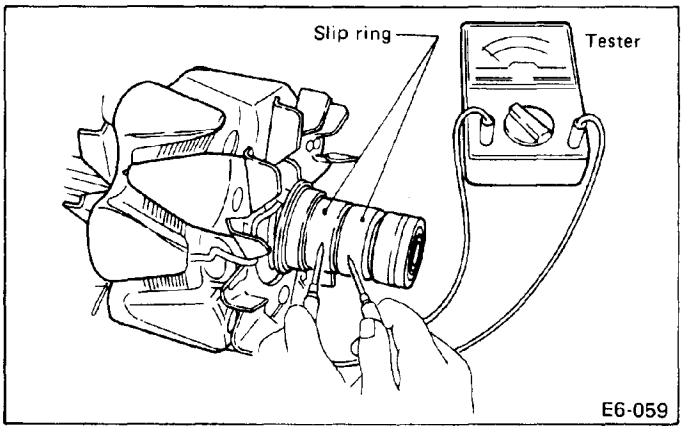

Fig. 32

4) Checking rotor coil for proper insulation
Check for continuity between the slip ring and rotor core or shaft using a circuit tester. If continuity is noted, the rotor coil is shortcircuited, and the rotor must be replaced with a new one.

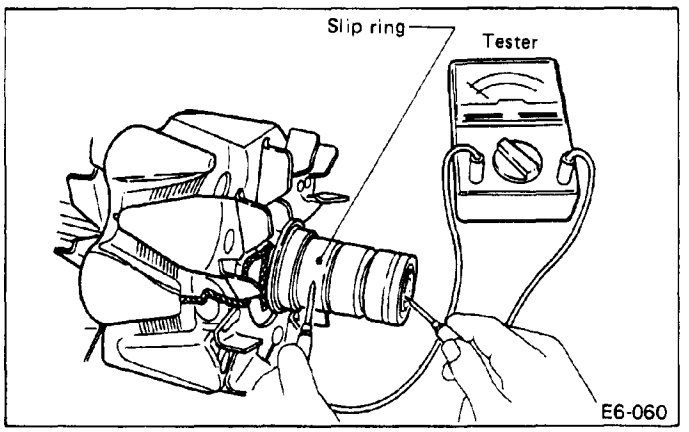

Fig. 33

5) Check the rear side ball bearing.
If resistance is felt while rotating, or if abnormal noise is heard, replace the ball bearing.

After separating the rotor, be sure to replace the rear side ball bearing.

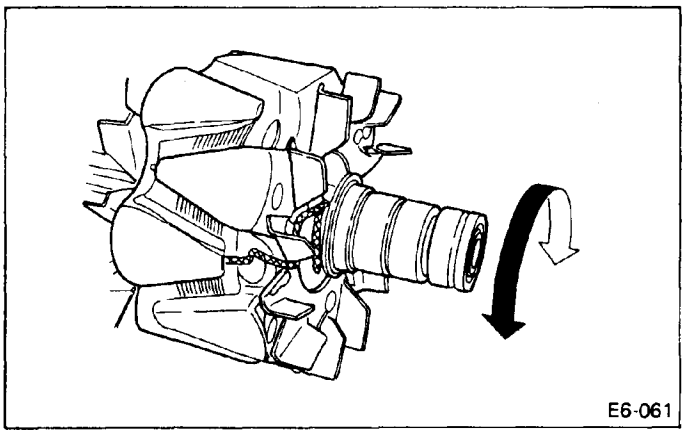

Fig. 34

STATOR

1) Checking stator coil for continuity
Check the stator coil for continuity between terminals using a circuit tester. If no continuity is noted, it indicates that the stator coil is disconnected, and the stator must be replaced.

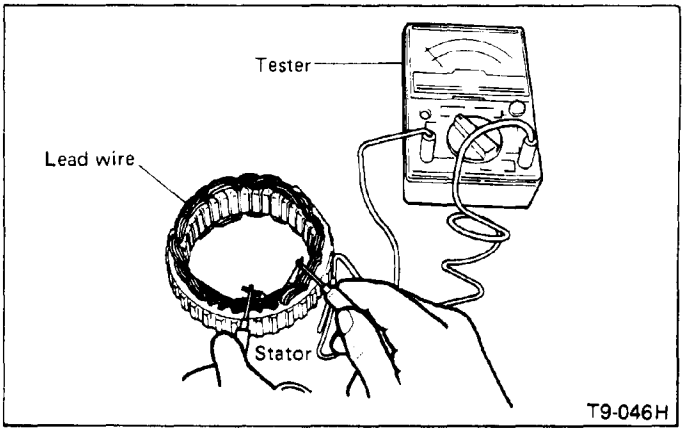

Fig. 35

2) Checking stator coil for proper insulation
Connect the circuit tester between any terminal of the stator coil and the stator core. If continuity is noted, it indicates that the stator coil is shortcircuited inside, and the stator must be replaced.

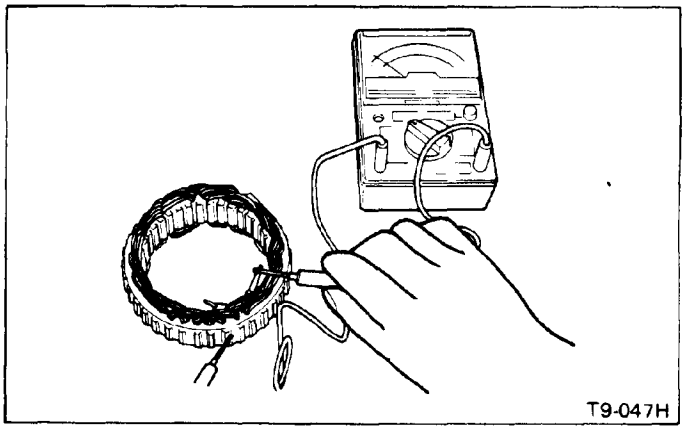

Fig. 36

BRUSHES

Measure the length of each brush. If wear exceeds the wear limit, replace the brush. Each brush has the wear limit mark on it.

Brush length:
Standard
18 mm (0.71 in)
Wear limit
6.0 mm (0.236 in)

If the brush pigtail (lead wire) is soldered, use a soldering iron heated to 300 to 350°C (572 to 662°F) and paste without oxygen.

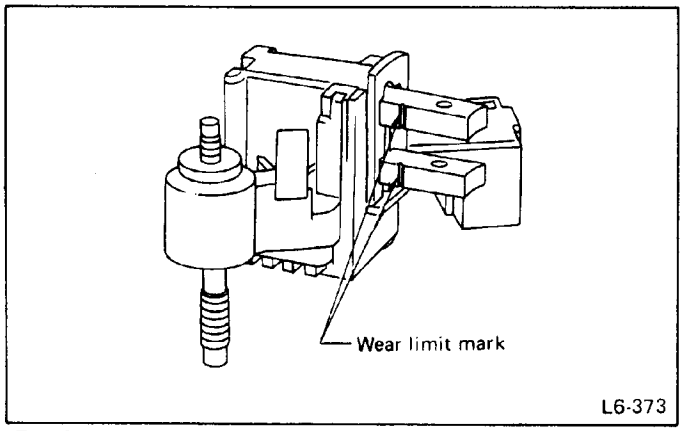

Fig. 37

IC REGULATOR

Connect a variable resistor, two 12-V batteries, a resistor and voltmeter as shown below.

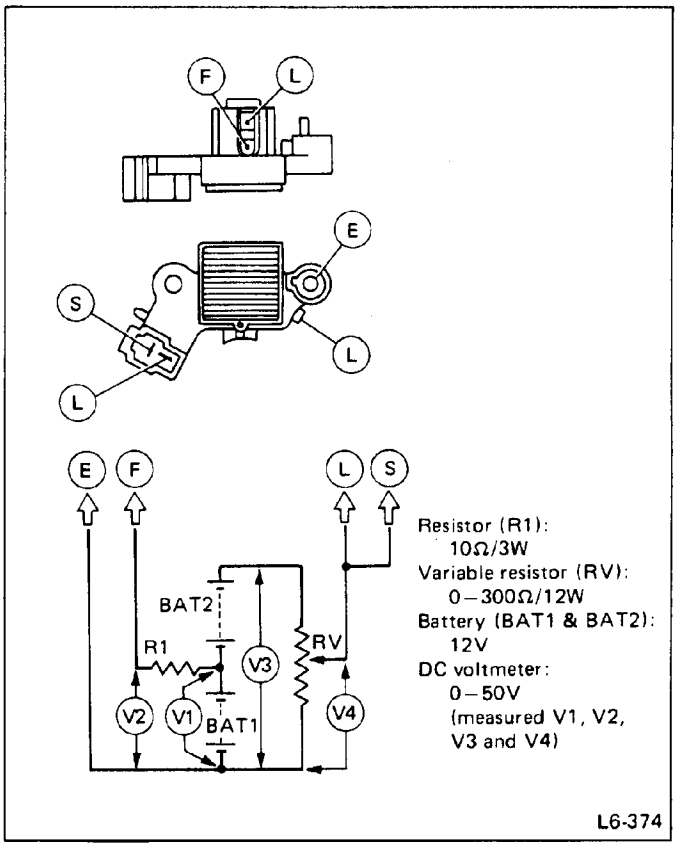

Fig. 38

Perform the following measurement:

1) Check V1 (voltage of BAT1). The voltage must be 10 to 13V.

2) Check V3 (voltage of BAT1 + BAT2). If a voltage of 20 to 26V is measured, both BAT1 and BAT2 are normal.

3) Measure V2 (voltage between terminals F and E) while gradually moving the variable resistor away from 0. Voltage V2 should change from below 2.0V to voltage V1 measured in step 1) above. If no change is observed, the regulator is faulty, and must be replaced with a new one.

4) Measure V4 (voltage between the intermediate tap of variable resistor and terminal E) with variable resistor RV fixed to see whether the voltage is within the specified range. If found within the range, the regulator is normal. If out of range, replace the regulator with a new one.

ASSEMBLY

To reassemble, reverse the disassembly procedure, noting the following points.

1) Use a high temperature solder for soldering the diode and stator coil leads, and the diode lead and brush holder.
Observe the following working conditions:

Soldering iron temperature	:	300 to 380°C (572 to 716°F)
Soldering time	:	Within 5 seconds
Solder	:	Pb-Sn (5-1) solder

2) Assembling of front side and rear side
(1) Whenever the alternator has been disassembled, be sure to replace the rear side ball bearing.
(2) The rear side bearing has a ring inserted into the offset groove of the outer race, and a part of the ring is projected to the outside of the outer race. When reassembling, rotate the ring so that this projection is minimized. If any fault is found on the rear cover bearing portion, replace the rear cover.

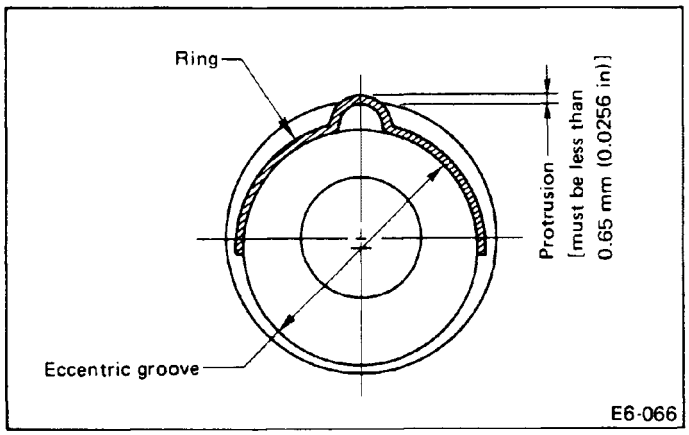

Fig. 39

(3) Insert a pin from outside the rear cover to push each brush into the brush holder.
After completely reassembled, be sure to remove the pin.

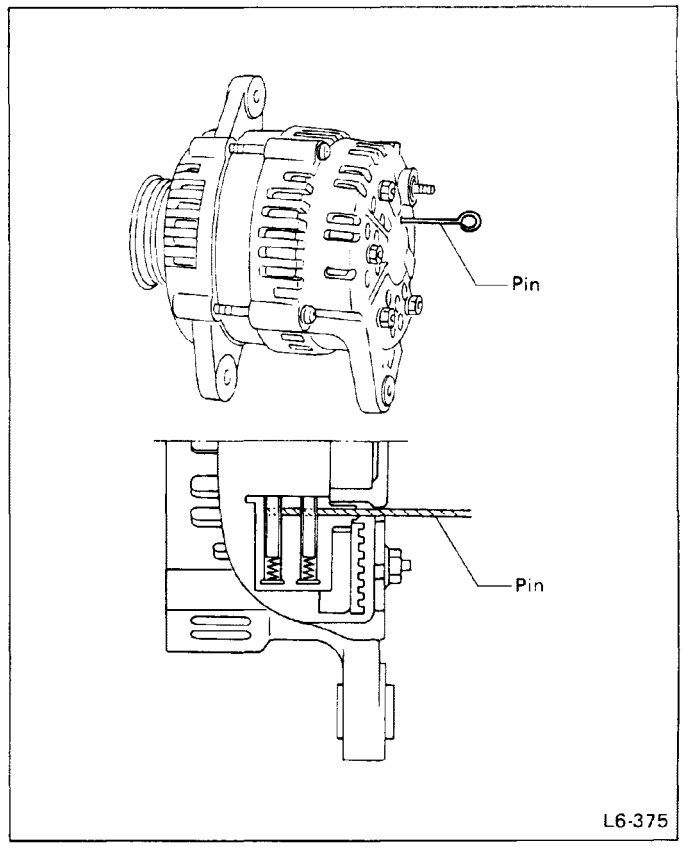

Fig. 40

2700cc model

DISASSEMBLY

1) Heat the bearing box to 50 to 60°C (122 to 140°F) with a 100 W-soldering iron and remove the three through bolts. Then insert the tip of a flat-head screwdriver into the gap between the stator core and front bracket. Pry then apart to disassemble.

Be careful not to lose the spring fitted in the periphery of the rear bearing.

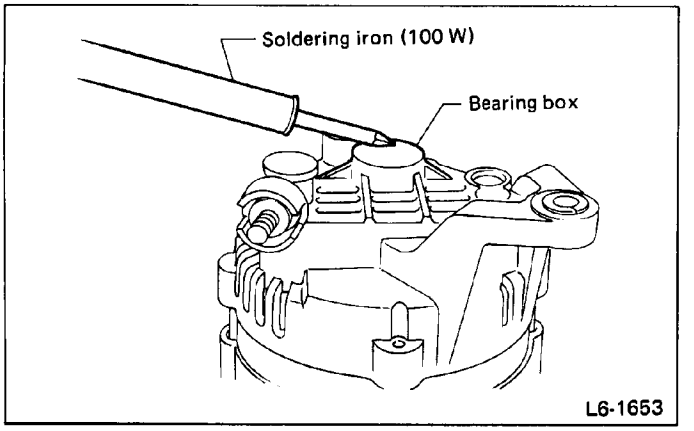

Fig. 41

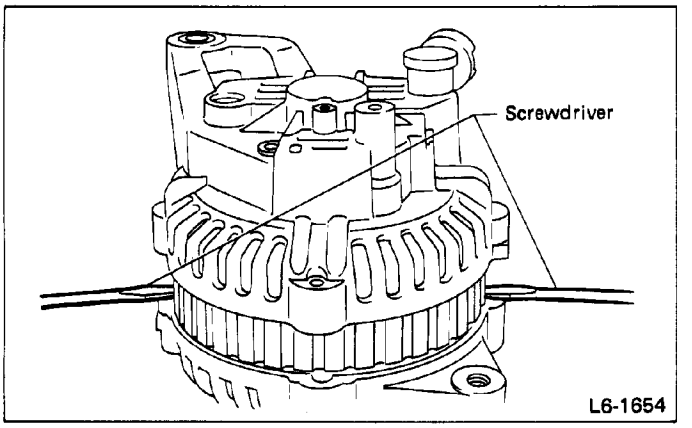

Fig. 42

2) Remove the pulley nut. The pulley rotor and front bracket can be separated.

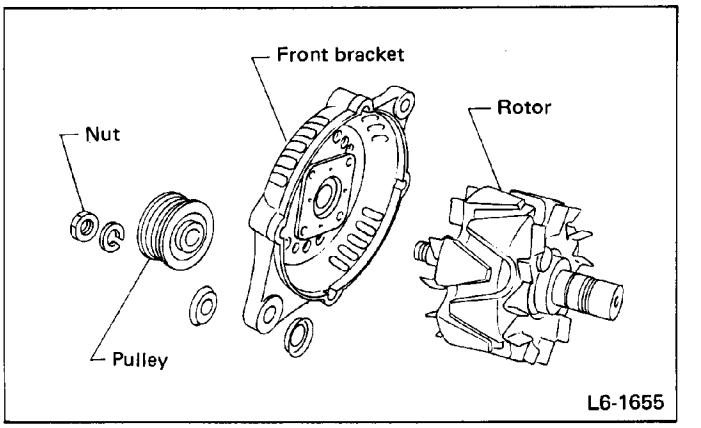

Fig. 43

3) Remove the nut and insulating bushing at terminal B. Remove the screws fastening the rectifier and the brush holders to separate the stator from the rear bracket.

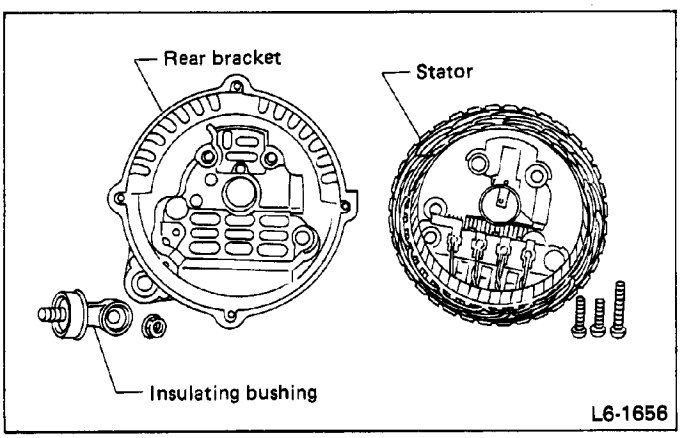

Fig. 44

4) Remove the IC regulator.

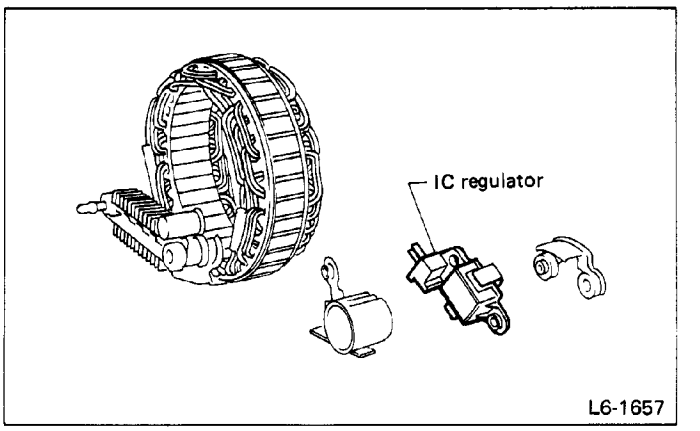

Fig. 45

5) Unsolder the rectifier and remove the stator.

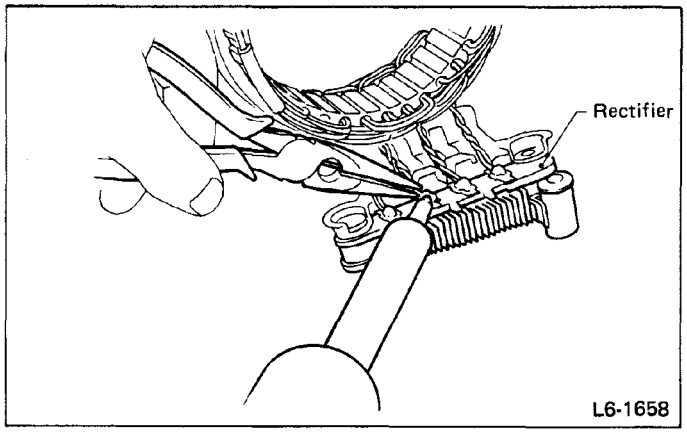

Fig. 46

6) Remove the brushes by unsoldering at the pigtails.

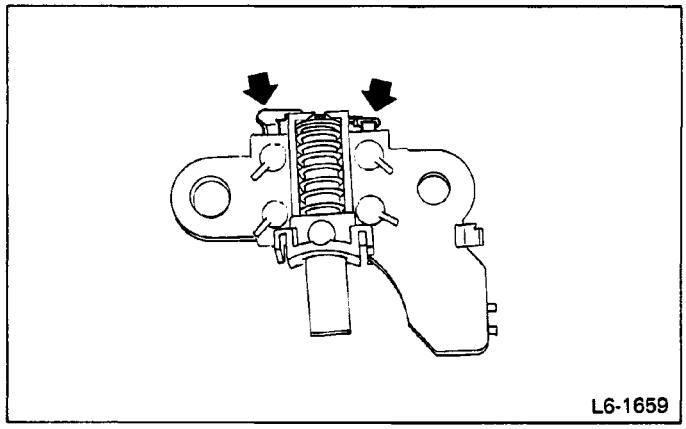

Fig. 47

INSPECTION AND REPAIR

DIODE

Never use a megger tester (measuring use for high voltage) or any other similar measure for this test; otherwise, the diodes may be damaged.

1) Checking positive diode

Check for continuity between the diode lead and the positive side heat sink. The positive diode is in good condition if continuity exists only in the direction from the diode lead to the heat sink.

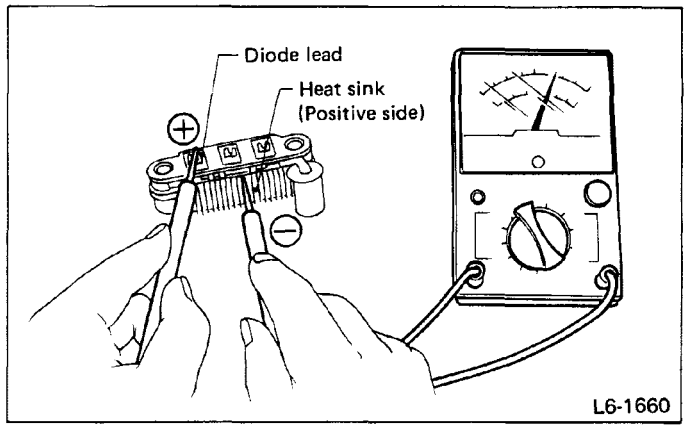

Fig. 48

2) Checking negative diode

Check for continuity between the negative side heat sink and diode lead. The negative diode is in good condition if continuity exists only in the direction from the heat sink to the diode lead.

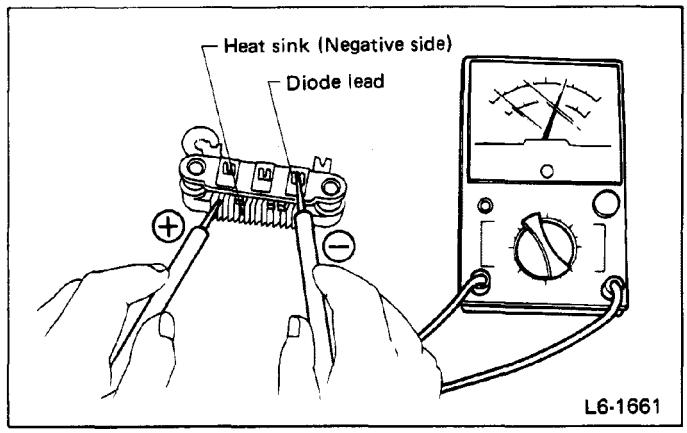

Fig. 49

3) Checking trio diode

Check the trio diode using a circuit tester. It is in good condition if continuity exists only in one direction.

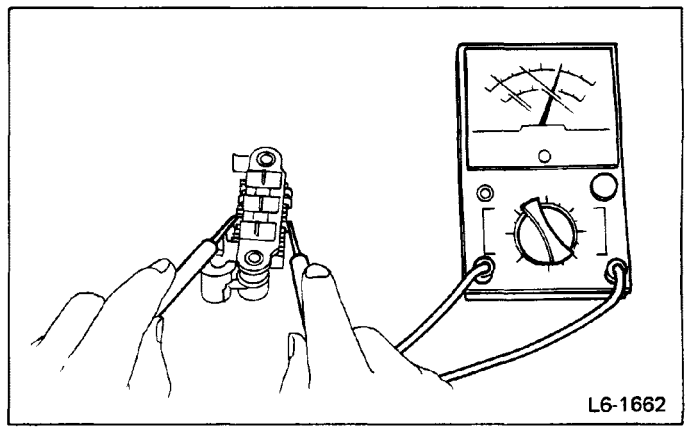

Fig. 50

ROTOR

1) Checking slip ring surface

Repair the slip ring surface, if rough, with a lathe or fine sandpaper.

2) Checking rotor coil for continuity

Check the resistance between the slip rings with a circuit tester. It should be somewhere between 3.0 and 3.5Ω. If the resistance is not within this range, replace rotor with a new one.

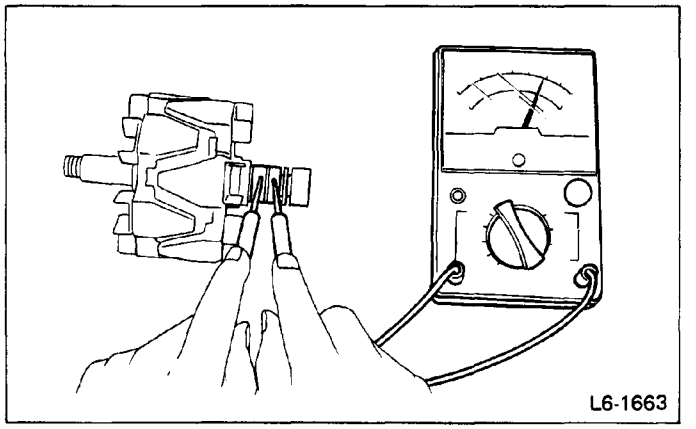

Fig. 51

3) Checking rotor coil for proper insulation

Check for continuity between the slip ring and rotor core using a circuit tester. If continuity is noted, the rotor coil is shortcircuited, and the rotor must be replaced with a new one.

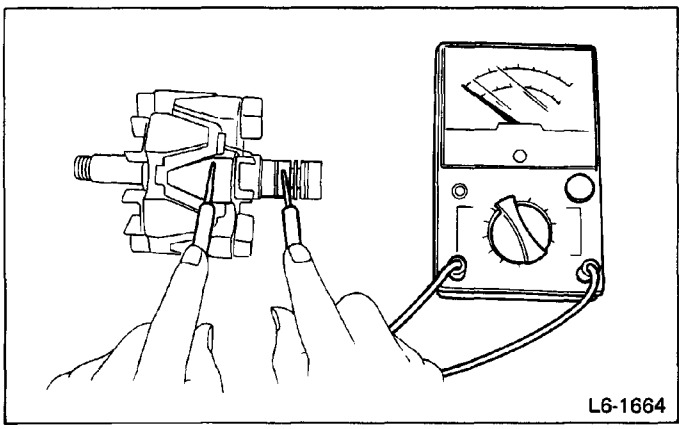

Fig. 52

BEARING

Check front and rear ball bearings.

If resistance is felt while rotating, or if abnormal noise is heard, replace the ball bearing.

After separating the rotor, be sure to replace front and rear ball bearings.

1) Replacing front bearing

Install closely fit jig on the bearing outer race. Press the bearing down into place with a hand press or vise. A socket wrench can serve as the jig.

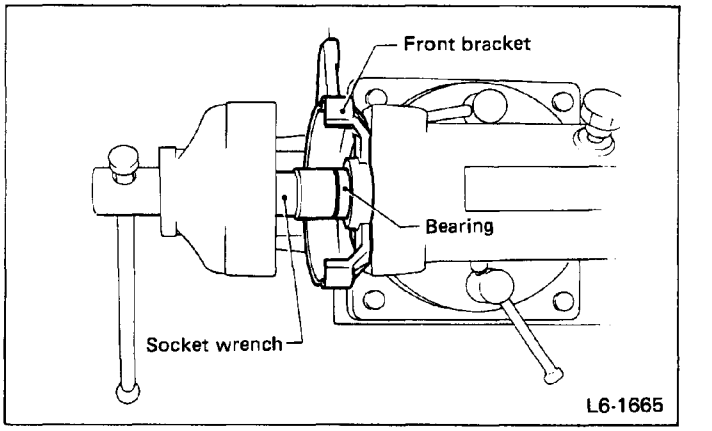

Fig. 53

2) Replacing rear bearing

The rear bearing can be removed by using a common bearing puller. When installing a new one, press-fit so that its peripheral groove is on the slip ring side.

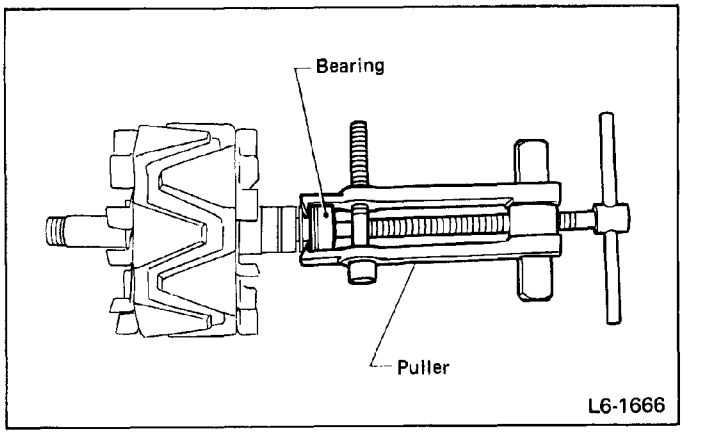

Fig. 54

STATOR

1) Checking stator coil for continuity

Check the stator coil for continuity between terminals using a circuit tester. If no continuity is noted, it indicates that the stator coil is disconnected, and the stator must be replaced.

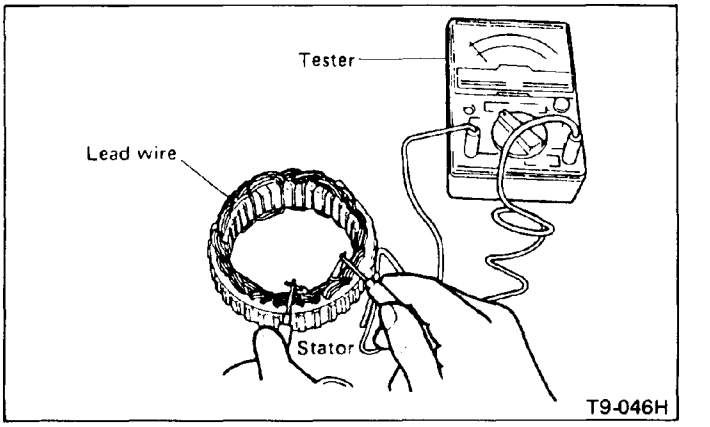

Fig. 55

2) Checking stator coil for proper insulation
Connect the circuit tester between any terminal of the stator coil and the stator core. If continuity is noted, it indicates that the stator coil is shortcircuited inside, and the stator must be replaced.

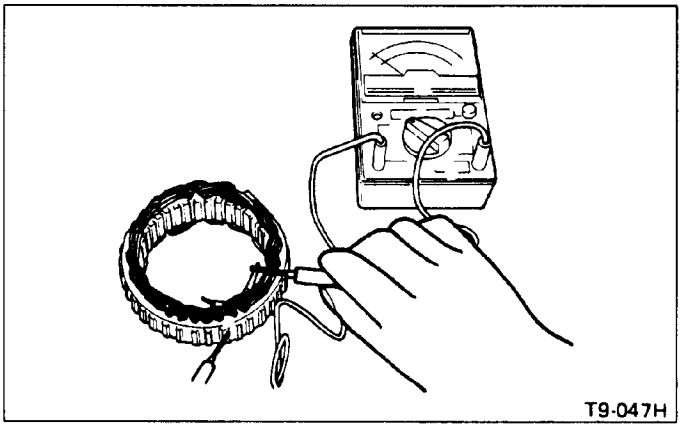

Fig. 56

2) Checking brush spring for proper pressure
Using a spring pressure indicator, push the brush into the brush holder until its tip protrudes 2 mm (0.08 in). Then measure the pressure of the brush spring. If the pressure is less than 2.059 N (210 g, 7.41 oz), replace the brush spring with a new one. The new spring must have a pressure of 2.942 to 3.923 N (300 to 400 g, 10.58 to 14.11 oz).

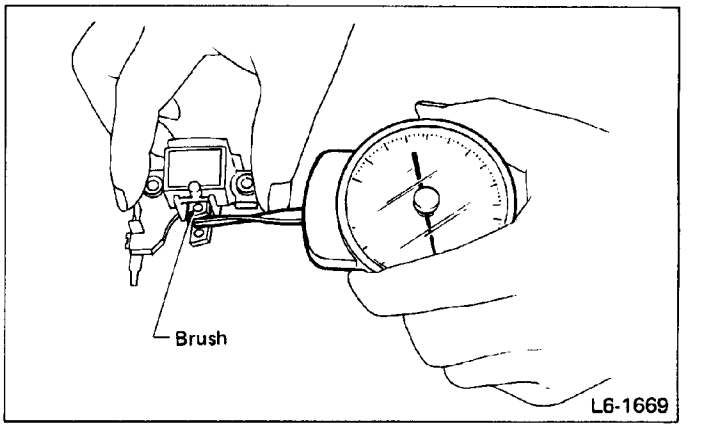

Fig. 58

BRUSHES

1) Measure the length of each brush. If wear exceeds the wear limit, replace the brush. Each brush has the wear limit mark on it.

Brush length:
Standard
16.5 mm (0.650 in)
Wear limit
8.0 mm (0.31 in)

If the brush pigtail (lead wire) is soldered, use a soldering iron heated to 300 to 350°C (572 to 662°F) and paste without oxygen.

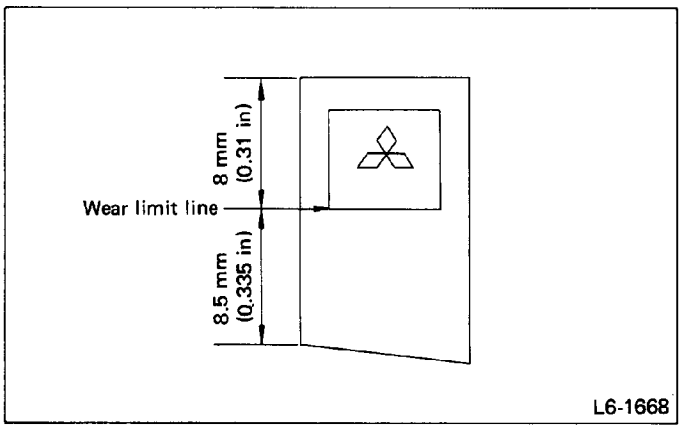

Fig. 57

ASSEMBLY

To reassemble, reverse the disassembly procedure, noting the following points.
1) The rear bearing has an eccentric groove on its periphery. Fit the lock spring into this groove so that the projecting part is in the deepest portion of the groove. This will reduce spring projection, making reassembly easy. Also, it assures greater locking effect, since the spring will be free from undue force during reassembly. The deepest portion of the groove has chamfered edges for easy identification.

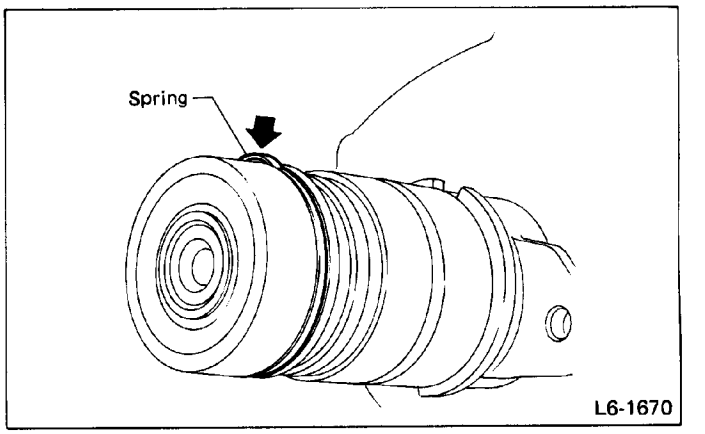

Fig. 59

2) Pulling up brush
Before assembling, press the brush down into the brush holder with your finger and secure in that position by passing a [2 mm (0.08 in) dia. length 4 to 5 cm (1.6 to 2.0 in)] wire through the hole shown in the figure.

Be sure to remove the wire after reassembly.

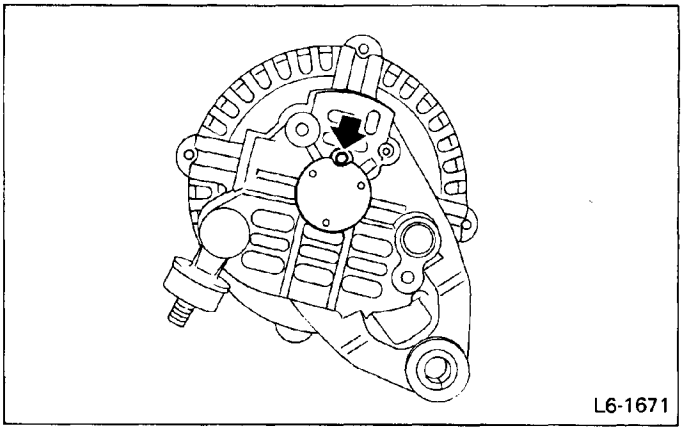

Fig. 60

3) Heat the rear bracket [50 to 60°C (122 to 140°F)] and press the rear bearing into the rear bracket. Then lubricate the rear bracket.
4) After reassembly, turn the pulley by hand to check that the rotor turns smoothly.

Distributor

DESCRIPTION

This distributor is equipped with a photoelectric crank-angle sensor which transmits a crank-angle signal and a cylinder-identification signal to the MPFI control unit.

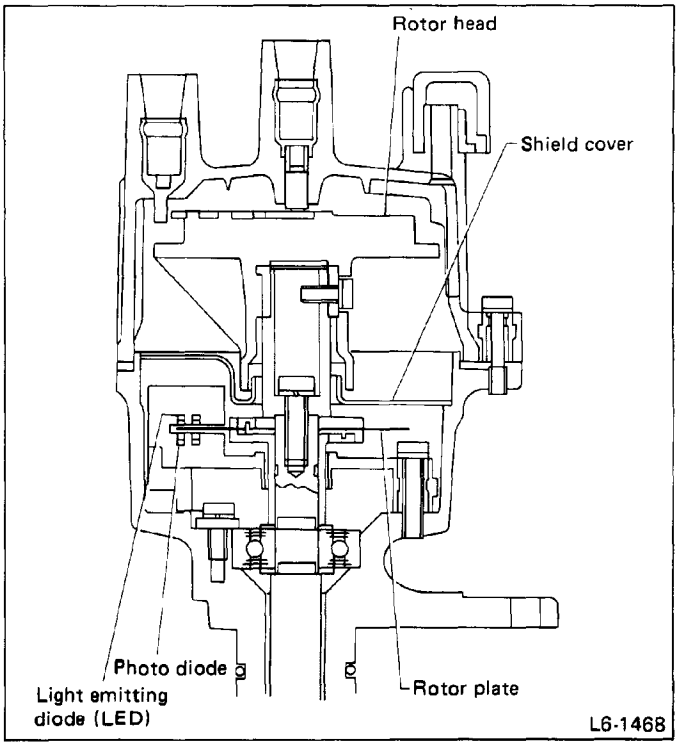

Fig. 61

A signal processing unit, which is built into the distributor housing, consists of LED and a photodiode. The rotor plate, located between the LED and the photodiode, is secured to the rotor shaft.
The rotor plate has four slits along its periphery through which 90° signals (in terms of distributor angle) are transmitted for cylinder detection. In addition, there are three hundred and sixty slits through which 1° signals (in terms of distributor angle) are transmitted for crank-angle detection. Directly above the rotor plate is the LED and below it is the photodiode.
When the ignition switch is turned "ON", the LED emits light to the photodiode. The rotor plate turns as the engine starts. The light emitted from the LED is then repeatedly interrupted and transmitted through the slits by rotation of the rotor plate. The "on-off" light signals (for cylinder detection and crank-angle detection) are then converted into output signals which are transmitted to the MPFI control unit.
The MPFI control unit determines optimum ignition timing in response to these output signals and engine operating conditions and transmits an ignition signal to the ignition coil.
This type of distributor is not equipped with a centrifugal advance angle and a vacuum advance angle device.

DISASSEMBLY

1) Detach cap and dust cover as a unit.
2) Remove carbon point from cap.
3) Remove rotor head securing screw and detach rotor head from rotor shaft.
4) Remove O-ring from housing.
5) Drive roll pin out of shaft and pinion.
6) Remove pinion from shaft.

Further disassembly of parts is prohibited.

INSPECTION

1) Carbon point
Measure the length of carbon point in cap. Replace if it is less than service limit.

Standard length:
12 mm (0.47 in)
Service limit:
10 mm (0.39 in)

2) Cap and rotor head
Measure insulation resistance using a megger. Replace if it is less than the specified value.

Insulation resistance:
More than 50 MΩ

ASSEMBLY

ASSY is in the reverse order of disassembly. Observe the following:
1) Use new roll pin when installing pinion.
2) Install pinion so that its alignment mark is aligned with the mark on the housing when the cutout section of rotor shaft faces the 1st cylinder mark on the cap.

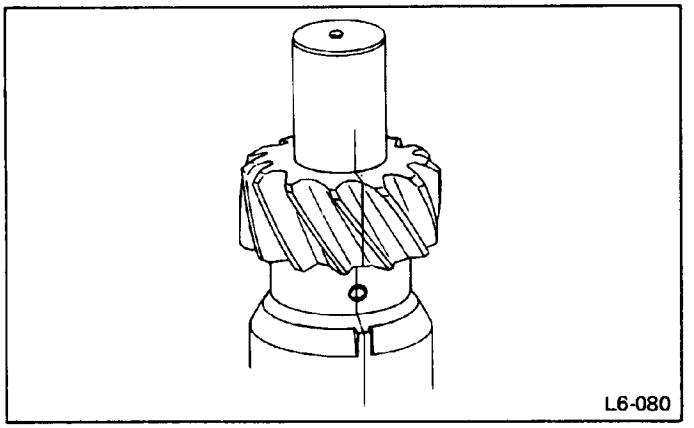

Fig. 62

Ignition Coil

The E12-113 ignition coil is equipped with a power transistor igniter. The power transistor amplifies the ignition signal transmitted from the MPFI control unit. The amplified signal is used to make and break the current flowing through the primary winding of the ignition coil.

REMOVAL AND INSTALLATION

1) Disconnect battery negative (-) terminals.
2) Disconnect wires from ignition coil.
3) Remove ignition coil.
4) To install, reverse the order of removal.

Be sure to connect wires to their proper positions. Failure to do so will damage unit.

INSPECTION

Using accurate tester, inspect the following items, and replace if defective.
1) Primary resistance
2) Secondary coil resistance

If the resistance is extremely low, this indicates the presence of a short-circuit.

3) Insulation between primary terminal and case: 10 MΩ or more.
4) If engine does not run due to faulty ignition system, check ignition system as follows:
Check for cracked distributor rotor or cap and corroded terminals.
Visually inspect high tension wire for condition. Check spark plugs and adjust gaps as necessary. Replace spark plug which is not suitable for further use.
If the above checks cannot correct the problem, check entire ignition system with oscilloscope or circuit tester in accordance with the troubleshooting charts. (See chapter 6-3)

Spark Plug

DESCRIPTION

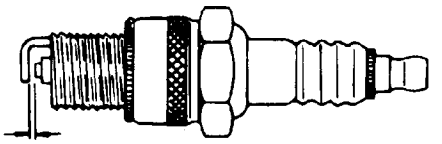

Fig. 63

The spark plugs are project type, having 14 mm (0.551 in) threads and 1.0 to 1.1 mm (0.039 to 0.043 in) gap.

All spark plugs installed on an engine, must be of the same heat range.

Applicable model	Spark plug
U.S.A.	NGK: BPR6ES-11 (or BPR5ES-11, BPR7ES-11) NIPPONDENSO: W20EPR-U11 (or W16EPR-U11, W22EPR-U11) CHAMPION: RN9YC-4 (or RN11YC-4)
Canada	CHAMPION: RN9YC-4 (or RN11YC-4)

REMOVAL AND INSTALLATION

1) Remove spark plug cords by pulling boot, not cord itself.
2) Remove spark plugs.
3) When installing spark plugs on cylinder head, use spark plug wrench.

Tightening torque (Spark plug):
20 – 29 N·m (2 – 3 kg-m, 14 – 22 ft-lb)

The above torque should be only applied to new spark plugs without oil on their threads.
In case their threads are lubricated, the torque should be reduced by approximately 1/3 of the specified torque in order to avoid their over-stressing.

4) Connect spark plug cords.

INSPECTION

Check electrodes and inner and outer procelains of plugs, noting the type of deposits and the degree of electrode erosion.

1) Normal

Brown to grayish-tan deposits and slight electrode wear indicate correct spark plug heat range.

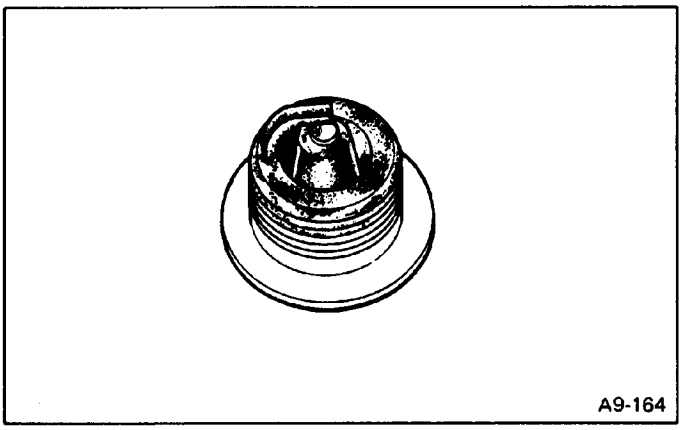

Fig. 64

2) Carbon fouled

Dry fluffy carbon deposits on insulator and electrode are mostly caused by slow speed driving in city, weak ignition, too rich fuel mixture, dirty air cleaner, etc.

It is advisable to replace with plugs having hotter heat range.

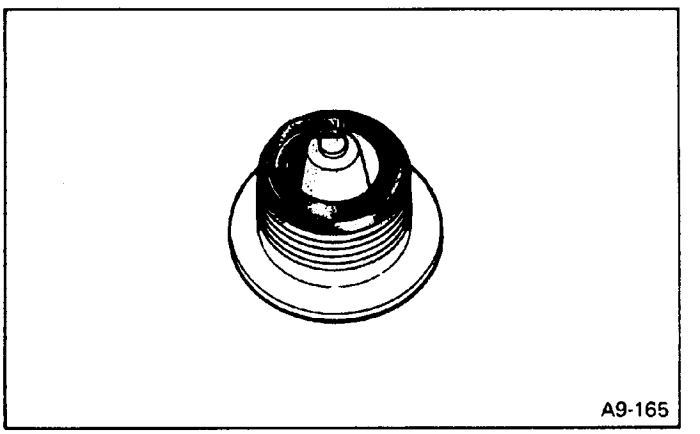

Fig. 65

3) Oil fouled
Wet black deposits show excessive oil entrance into combustion chamber through worn rings and pistons or excessive clearance between valve guides and stems. If same condition remains after repair, use a hotter plug.

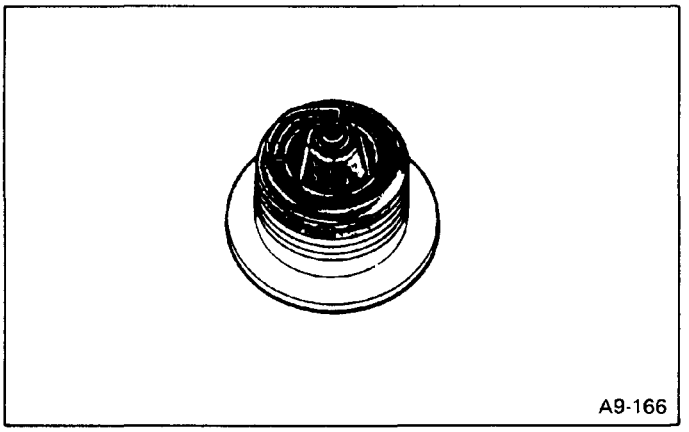

Fig. 66

4) Overheating
White or light gray insulator with black or gray brown spots and bluish burnt electrodes indicate engine overheating. Moreover, the appearance results from incorrect ignition timing, loose spark plugs, wrong selection of fuel, hotter range plug, etc. It is advisable to replace with plugs having colder heat range.

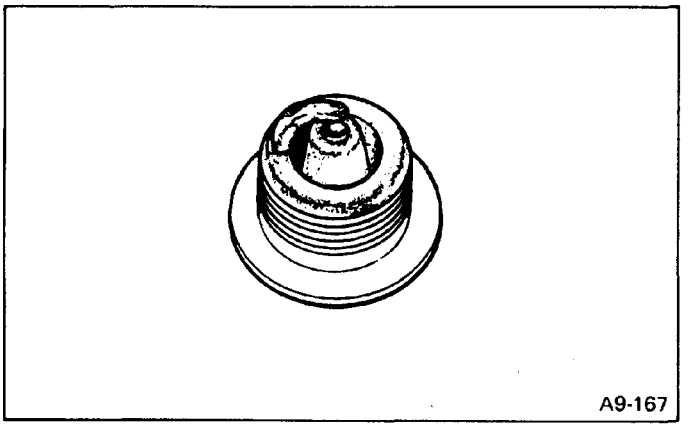

Fig. 67

CLEANING AND REGAPPING

Clean spark plugs in a sand blast type cleaner.
Avoid excessive blasting. Clean and remove carbon or oxide deposits, but do not wear away porcelain.
If deposits are too stubborn, discard plugs.
After cleaning spark plugs, recondition firing surface of electrodes with file. Then correct the spark plug gap to 1.0 to 1.1 mm (0.039 to 0.043 in) using a gap gauge.

TROUBLESHOOTING (ON THE CAR)

ALTERNATOR (2700 cc model)

1. **Rotational speed refers to the number of engine revolutions.**
2. **General inspections such as belt tightness and connector contact should be completed before troubleshooting.**
3. **Replace the battery with a good one for accurate inspection.**

BATTERY OVER-DISCHARGES

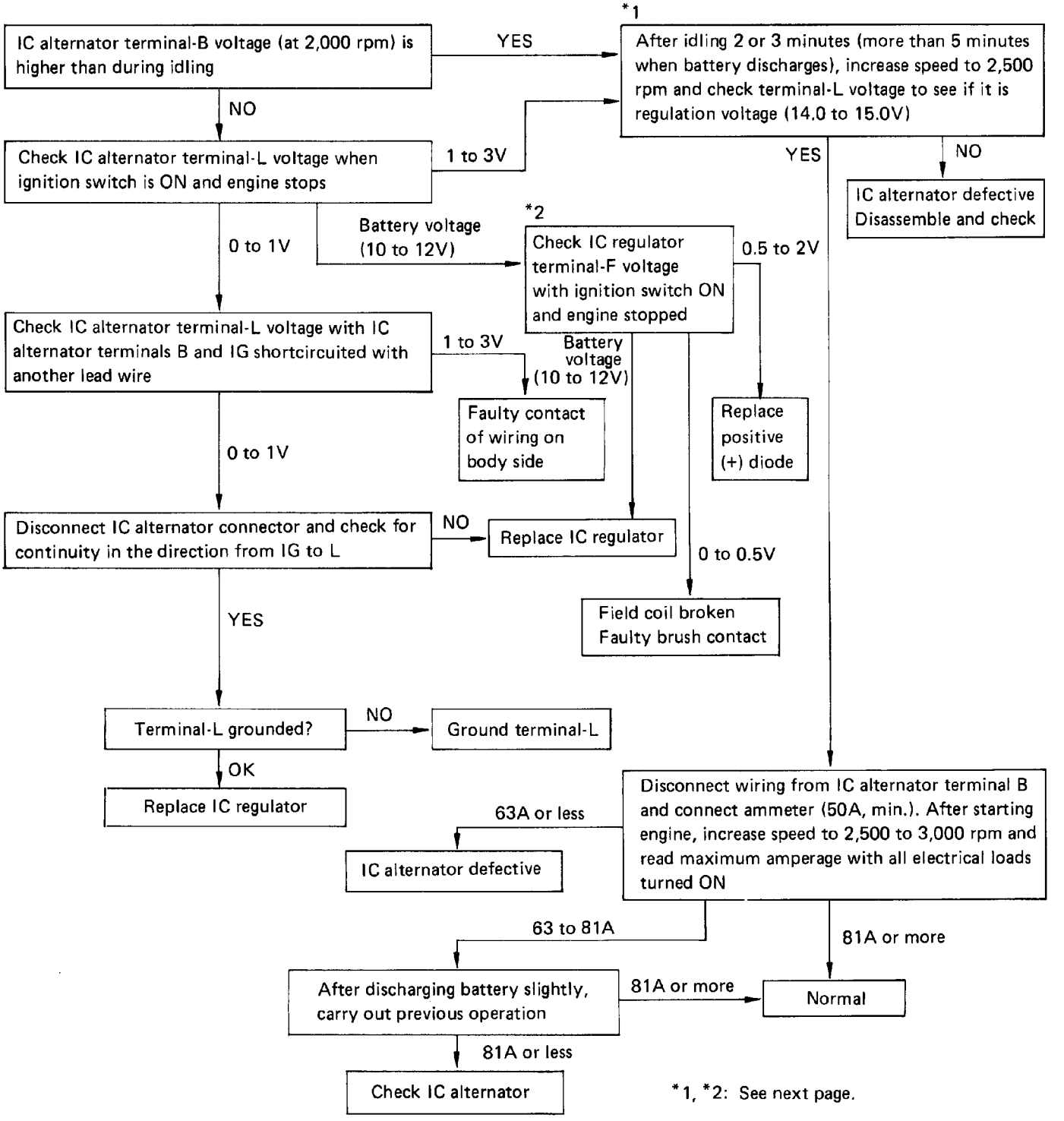

*1, *2: See next page.

BATTERY OVERCHARGES

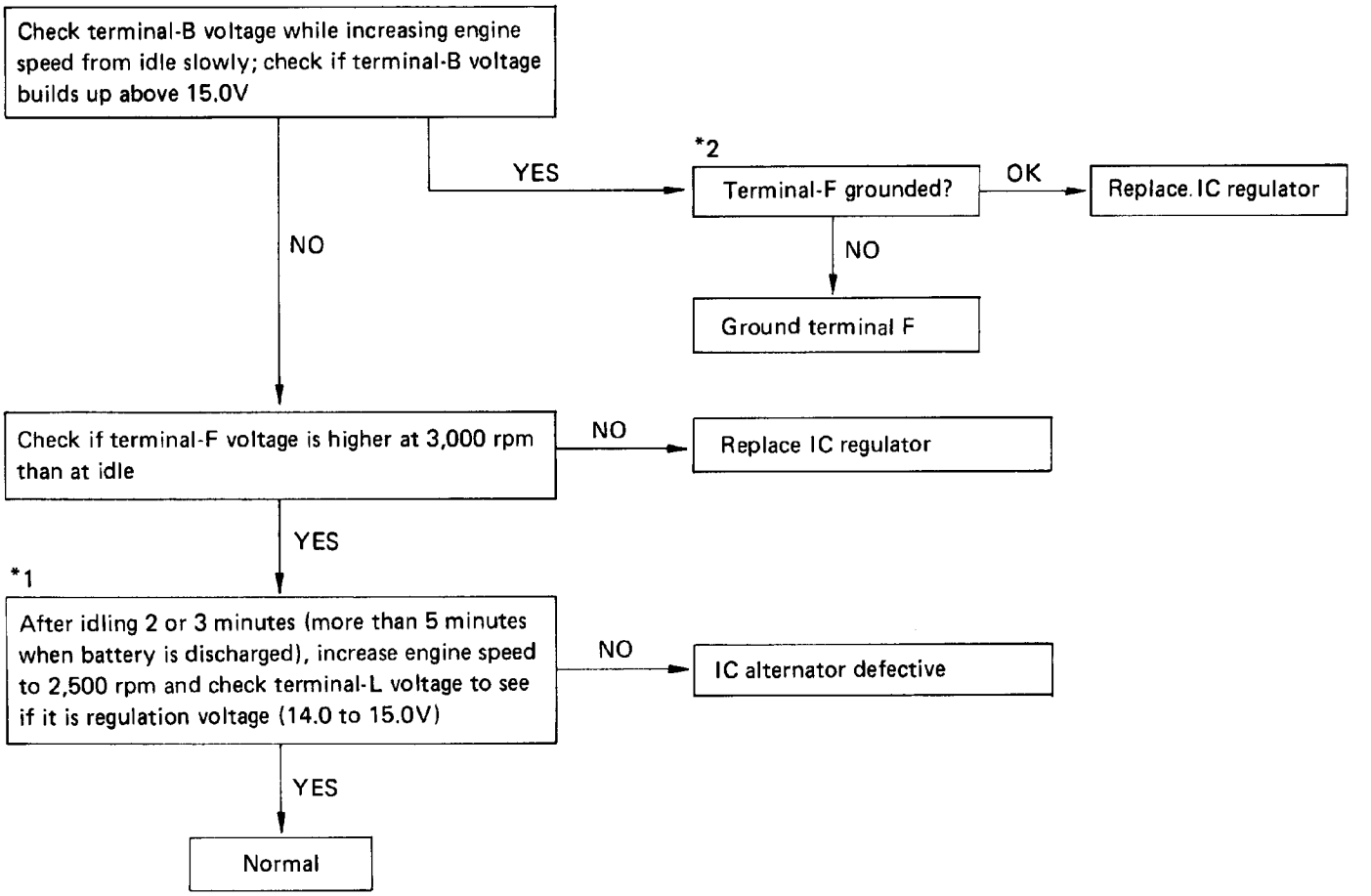

***1 When checking this, be sure to turn off the lights and all other electrical loads.**

***2 To check the voltage at terminal F, insert the contact bar straight through the access hole. This will allow the contact bar to hit only terminal F. Even if the bar comes into contact with the rear bracket during insertion, no damage will result as long as it is released.**

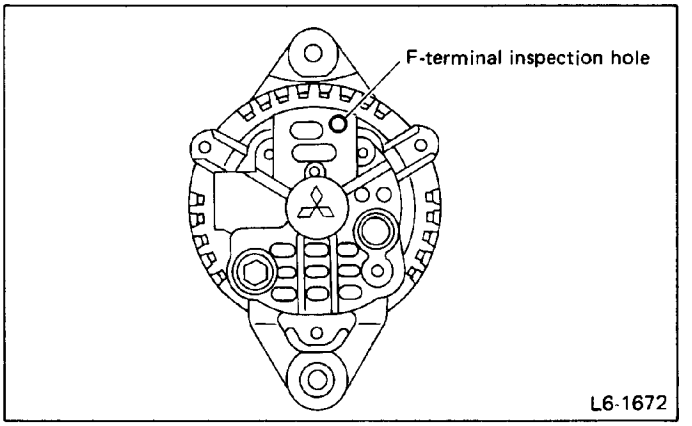

Fig. 68

BODY ELECTRICAL SYSTEM

6-2

SUBARU

1988

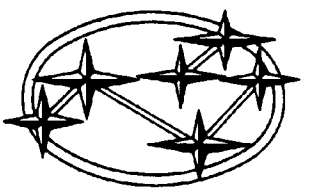

	Page
SPECIFICATIONS AND SERVICE DATA	2
COMPONENT PARTS	5
Combination Meter	5
Switches	6
Retractable Headlight	7
Front Combination Light	7
Fog Light	8
Rear Combination Light	8
High-Mount Stop Light	9
License Plate Light	9
Room Light	9
Wiper	9
Window Washer	10
Headlight Washer	10
Electrical Equipment	11
SERVICE PROCEDURE	12
Battery	12
Fuse	13
Combination Meter	18
Trip Computer (XT6 only)	24
Ignition Switch	34
Combination Switch	35
Control Wing	36
Retractable Headlight	40
Wiper and Washer	42
Wiper Intermittent Control System	43
Radio	44
Antenna	45
Digital Clock	47
Horn	47
Rear Window Defogger	47
Cruise Control	48
Power Window	56
Remote Controlled Rearview Mirror	58
First Hold Switch	59
Differential Lock Switch	59
Fog Light Switch	60
Speed Warning Buzzer	60
Automatic Shoulder Belt and Key Warning Chime (Except Canada model)	61
Seat Belt and Key Warning Chime (Canada model only)	62

SPECIFICATIONS AND SERVICE DATA

			XT6		Others	
Battery	Type		55D23R (MF)*1	75D23R (MF)*2	50D20R (MF)*1	65D23R (MF)*2
	Capacity	Reserve capacity	99 minutes	111 minutes	78 minutes	111 minutes
		Cold cranking ampere	356 ampere	490 ampere	306 ampere	420 ampere
Fuses			15A : 17, 20A : 4		15A : 18, 20A : 2	
Combination meter	Type		Analogue meter			
	Speedometer		Eddy current type			
	Temperature gauge		Thermister-cross coil type			
	Fuel gauge		Resistor-cross coil type			
	Tachometer		Electric impulse type			
	Oil pressure gauge		Bimetal-bimetal type			
	Voltmeter		Cross coil type			
	Turn signal indicator light		12V-3W (x 2)			
	Low fuel indicator light		12V-3W			
	Charge indicator light		12V-1.4W			
	Oil pressure indicator light [DL model only]		–		12V-1.4W	
	CHECK ENGINE warning light		12V-1.4W			
	High beam indicator light		12V-1.12W			
	Brake fluid level warning light		12V-1.4W			
	Door ajar warning light		12V-1.12W (x 2)			
	Seat belt warning light		12V-1.12W			
	Stop light warning light		12V-1.4W			
	Parking brake warning light		12V-1.12W			
	Four wheel drive indicator light [Selective 4WD model only]		–		12V-1.12W (x 1 or x 2)	
	Front wheel drive indicator light [4WD AT model only]		12V-1.12W		–	
	Meter illumination light		12V-3.4W (x 2) 12V-3W (x 2)			

*1: MT, *2: AT

		XT6	Others
Headlight		12V-65/55W (Halogen)	
Front combination light	Turn signal light	12V-27W	
	Clearance light	12V-8W	
Front fog light		12V-55W	–
Side marker light	Front	12V-3.8W	
	Rear	12V-3.8W	
Rear combination light	Stop and tail light	12V-27/8W	
	Turn signal light	12V-27W	
	Back-up light	12V-27W	
License plate light		12V-3.8W (x 2)	
High-mount stop light		12V-27W	
Spot & room light		12V-8W (x 3)	
Trunk room light		12V-5W	
Glove box light		12V-3.4W	
Front ash tray illumination light		12V-1.4W	
Automatic transmission selector illumination light		12V-3.4W	
Windshield wiper	Motor speed	2-speed with intermittent operation	
	Input	12V-50W or less	
Windshield washer	Pump type	Centrifugal	
	Input	12V-35W or less	
Radio	Type	AM/FM Mono, AM/FM Stereo	
		Push-button station selection or ETR	
	Speaker position	Front doors (x 2) Rear luggage shelf (x 2)	
Horn		12V-420 Hz, 12V-350 Hz	
Cigarette lighter	Input	12V-120W	
	Illumination light	12V-1.4W (x 2)	
Rear window defogger	Input	12V-150W	
	Indicator light	12V-1.4W (x 2)	

		XT6	Others
Power window (Option)	Rated voltage	12V	
	Rated current	7A or less	
	Rated revolutions	55 rpm	
	Rated load	2.4 N·m (24 kg-cm, 21 in-lb)	
	Stalling current	20A or less	
	Stalling torque	8.3 N·m (85 kg-cm, 74 in-lb)	
	Working voltage	10V – 15V	
	Working temperature	–25 to 80°C (–13 to 176°F)	
	Raising or lowering time	Approx. 3.5 seconds (varies depending on ambient temperature, working voltage and type of glass)	
	Excess raising force	Approx. 196 N (20 kg, 44 lb) (varies depending on ambient temperature, working voltage and type of glass)	
Heater fan	Motor type	Electromagnetic type	
	Input	12V-160W or less	
Cooling fan	Motor type	Electromagnetic type	
	Input	12V-140W or less	12V-120W or less
Fuel pump	Input	12V-9.6W or less	
Headlight washer	Pump type	Centrifugal	
	Input	12V-240W or less	

COMPONENT PARTS

Combination Meter

Analogue meter

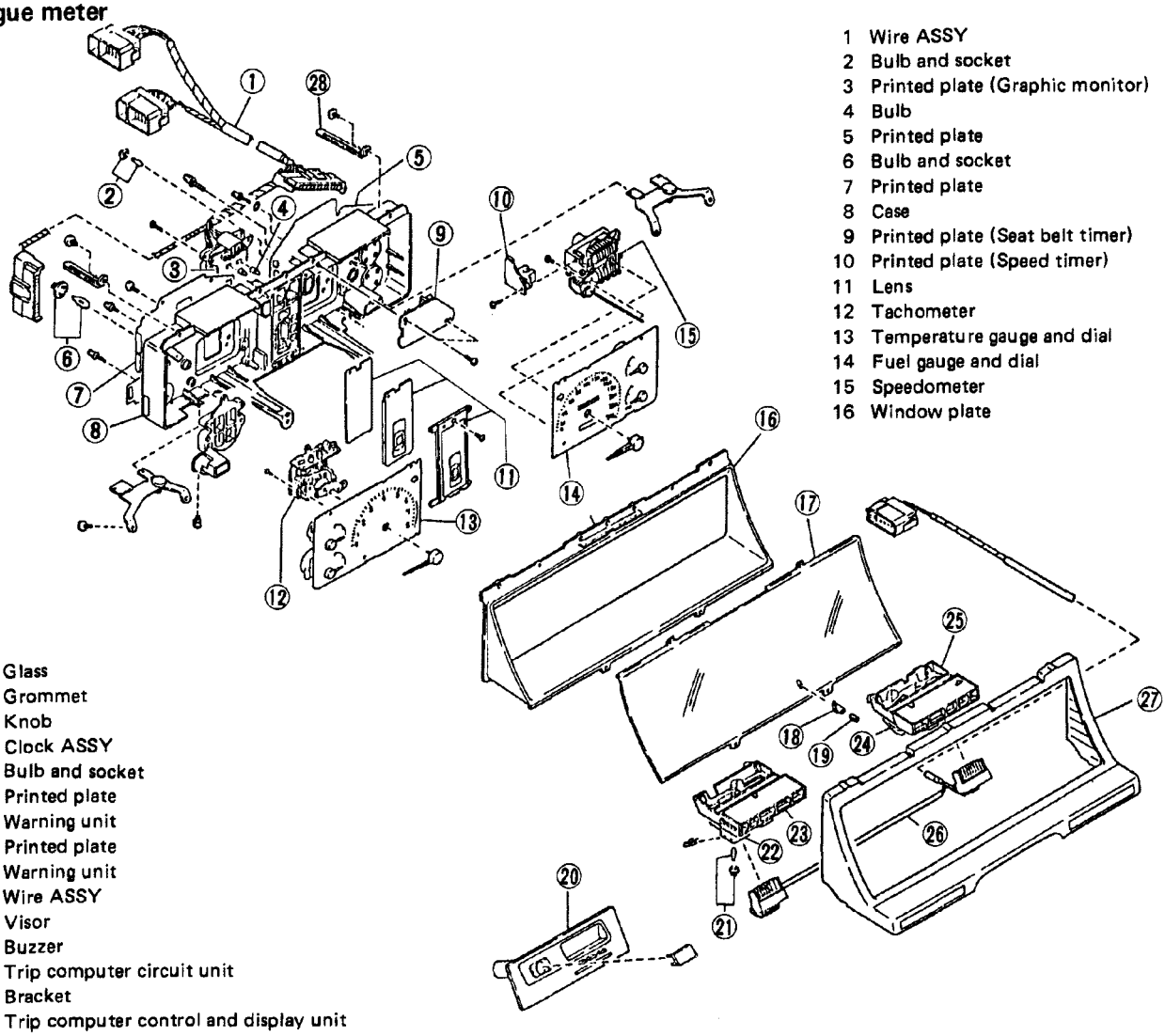

1 Wire ASSY
2 Bulb and socket
3 Printed plate (Graphic monitor)
4 Bulb
5 Printed plate
6 Bulb and socket
7 Printed plate
8 Case
9 Printed plate (Seat belt timer)
10 Printed plate (Speed timer)
11 Lens
12 Tachometer
13 Temperature gauge and dial
14 Fuel gauge and dial
15 Speedometer
16 Window plate
17 Glass
18 Grommet
19 Knob
20 Clock ASSY
21 Bulb and socket
22 Printed plate
23 Warning unit
24 Printed plate
25 Warning unit
26 Wire ASSY
27 Visor
28 Buzzer
29 Trip computer circuit unit
30 Bracket
31 Trip computer control and display unit

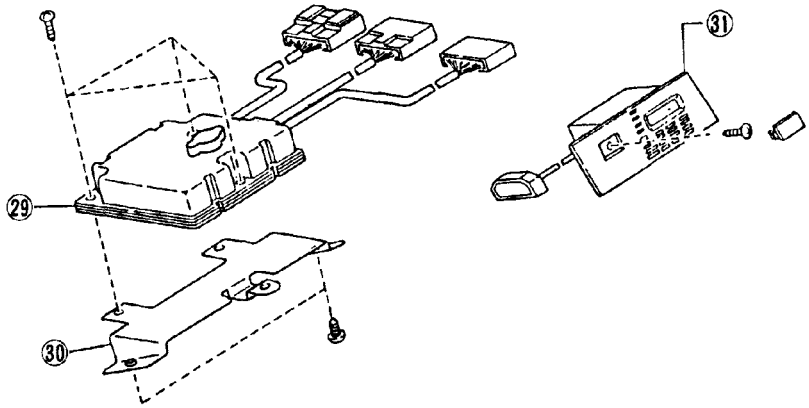

L6-1756

Fig. 1

Switches

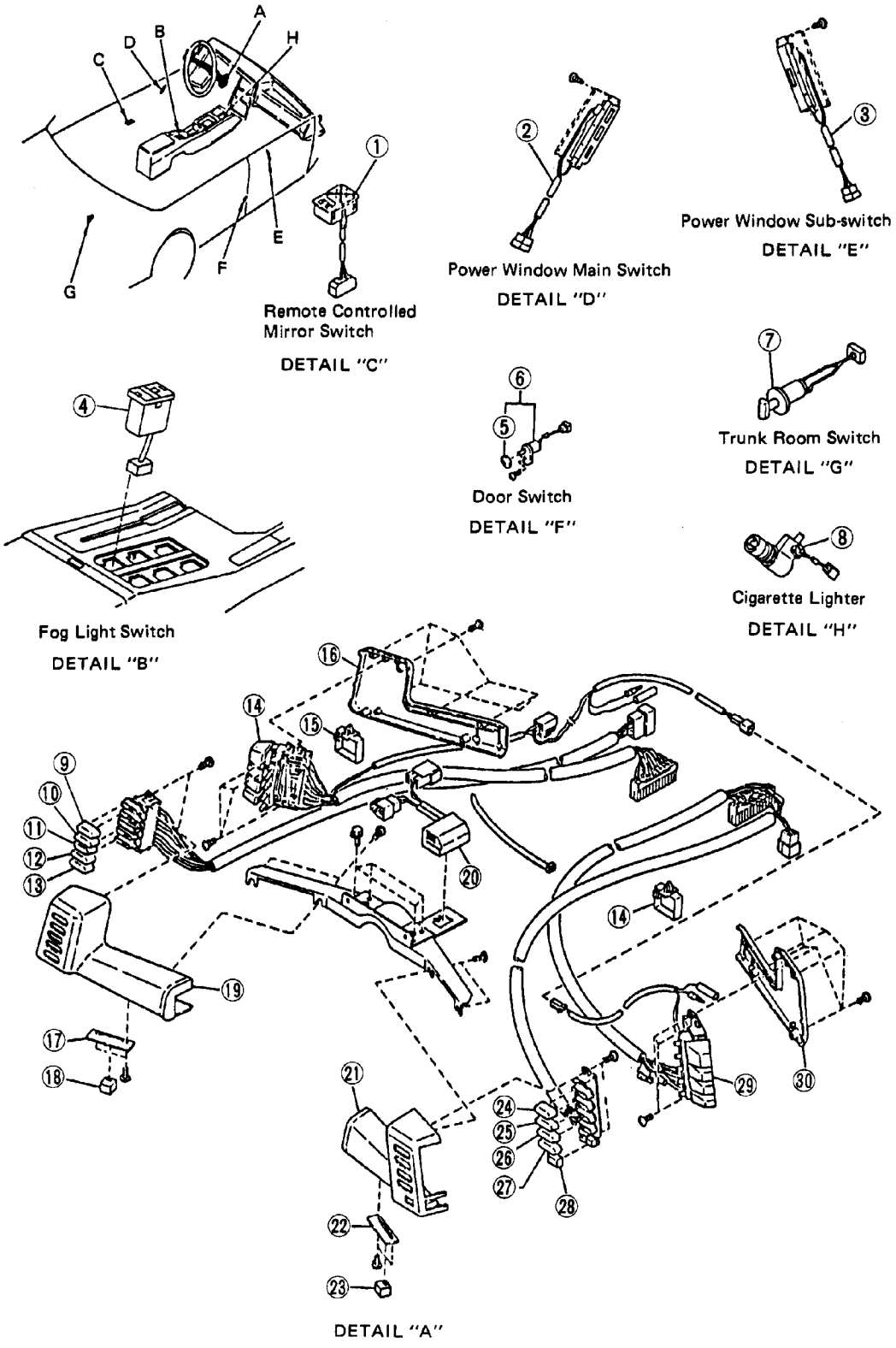

1 Remote controlled rearview mirror switch
2 Power window main switch
3 Power window sub-switch
4 Fog light switch (XT6 only)
5 Boot
6 Door switch
7 Trunk room switch
8 Cigarette lighter
9 Rear defogger knob
10 Retractable headlight knob
11 Headlight washer knob
12 Cruise knob
13 Height knob
14 Lighting switch ASSY
15 Control wink clip
16 Case (LH-B)
17 Illumination volume
18 Illumination knob
19 Case (LH-A)
20 Illumination unit
21 Case (RH-A)
22 Intermittent volume
23 Intermittent knob
24 Front defroster knob
25 Heat knob
26 Bilevel knob
27 Vent or A/C knob
28 OFF knob
29 Wiper switch ASSY
30 Case (RH-B)

Fig. 2 L6-1469

Retractable Headlight

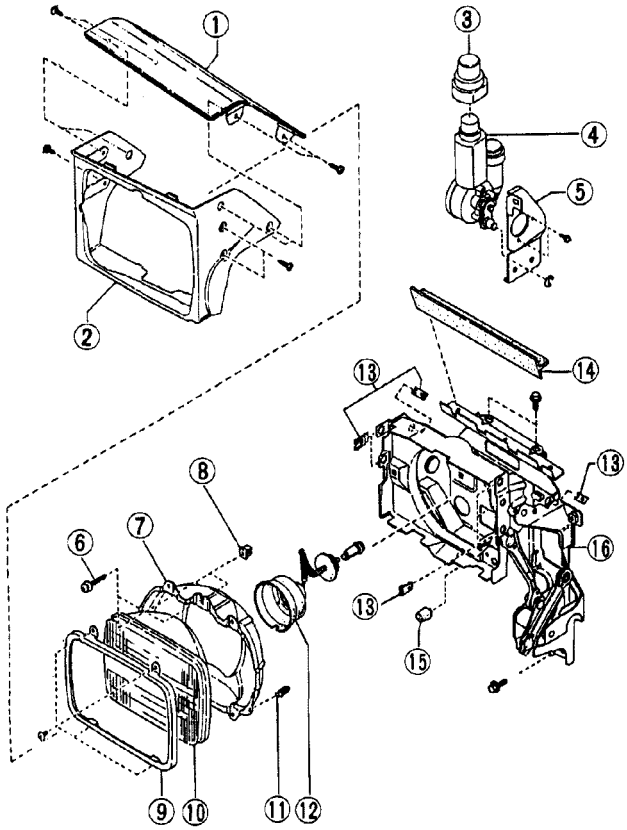

1 Lid
2 Cover
3 Cap
4 Retractable headlight motor
5 Bracket
6 Adjusting screw
7 Mounting ring
8 Screw grommet
9 Retaining ring
10 Sealed beam unit
11 Spring
12 Cord
13 Spring nut
14 Protector
15 Stopper
16 Retractable headlight ASSY

L6-1470

Fig. 3

Front Combination Light

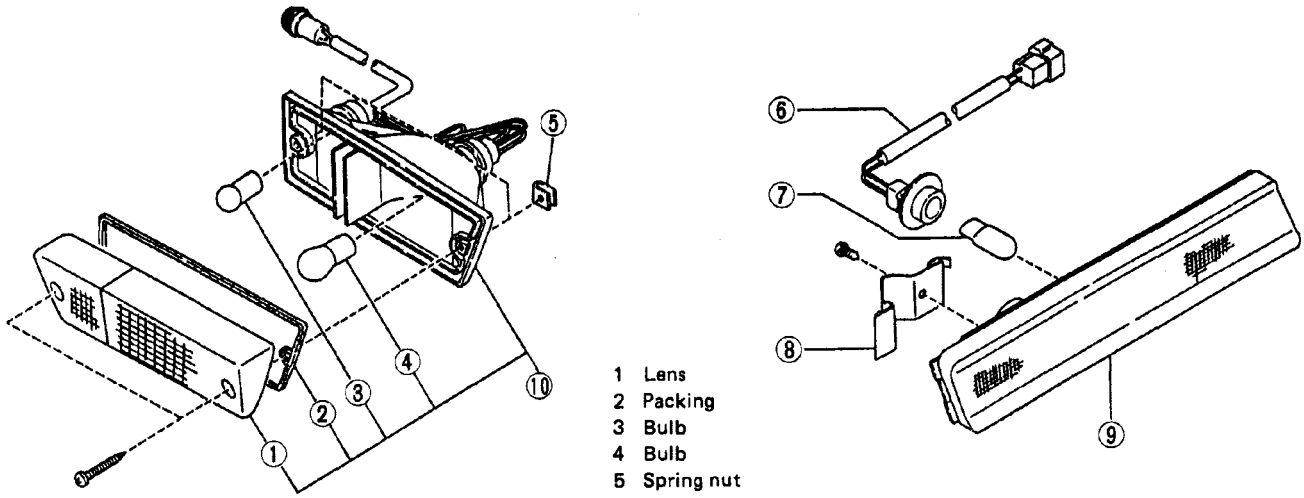

1 Lens
2 Packing
3 Bulb
4 Bulb
5 Spring nut
6 Socket CP
7 Bulb
8 Spring
9 Front side marker light lens and body
10 Front combination light ASSY

L6-1471

Fig. 4- ①

Fog Light

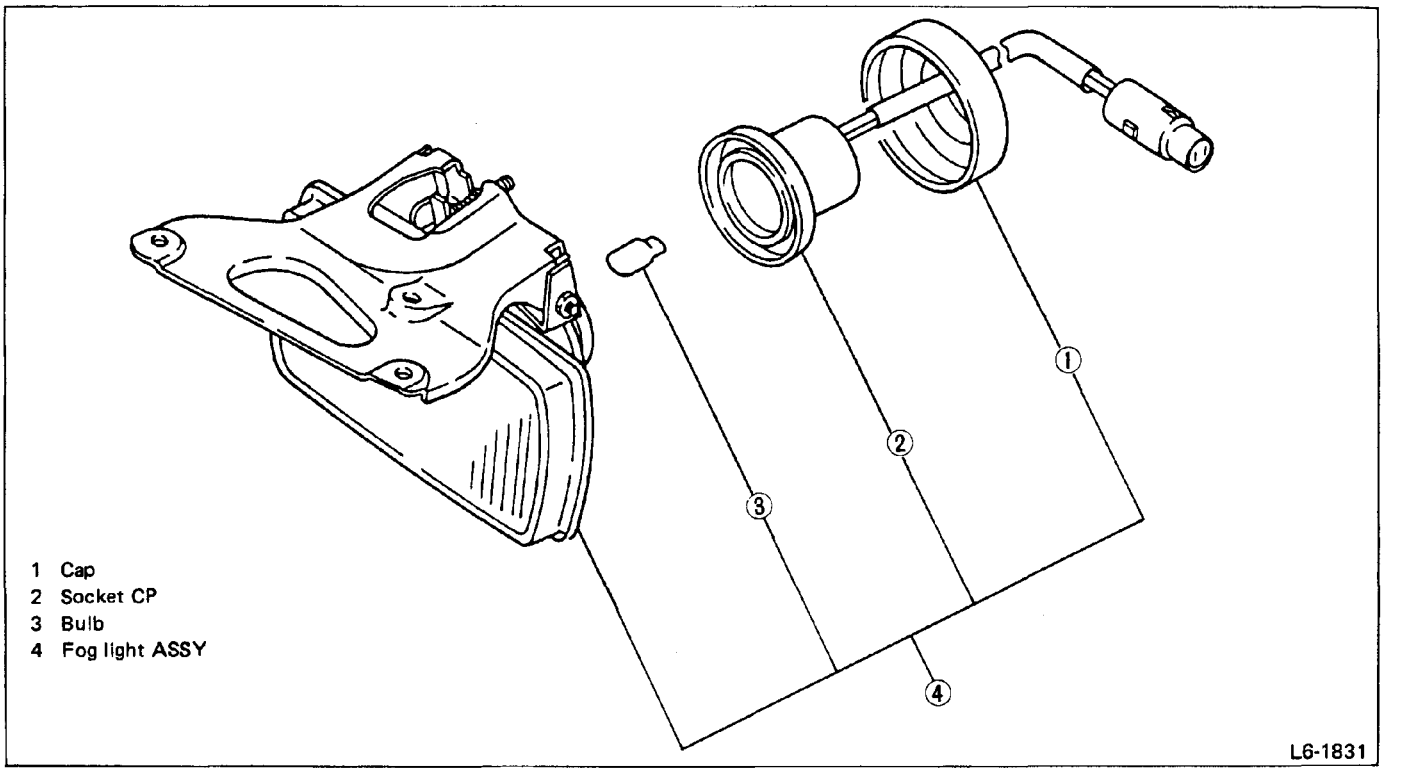

Fig. 4-②

Rear Combination Light

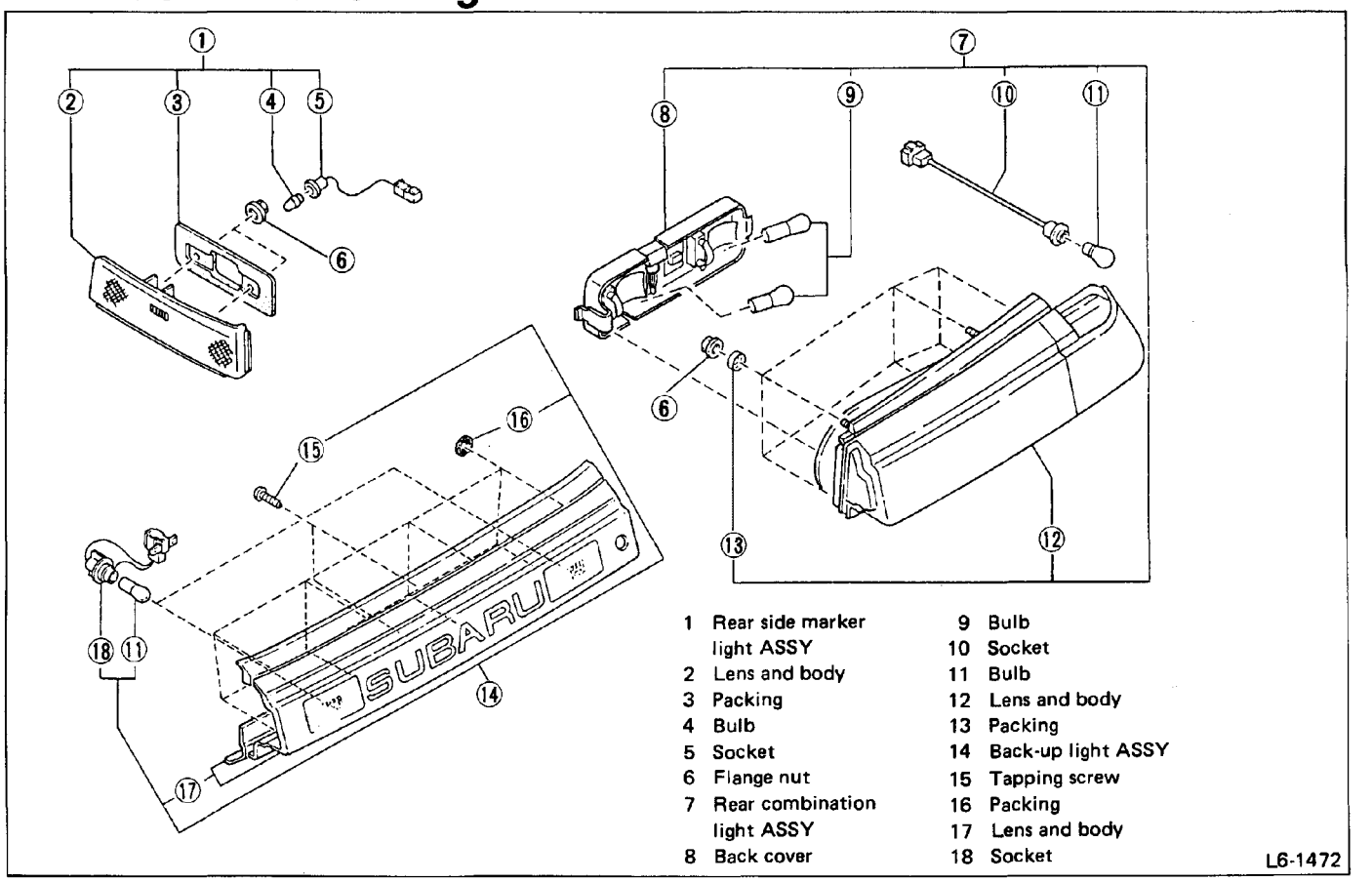

Fig. 5

High-Mount Stop Light

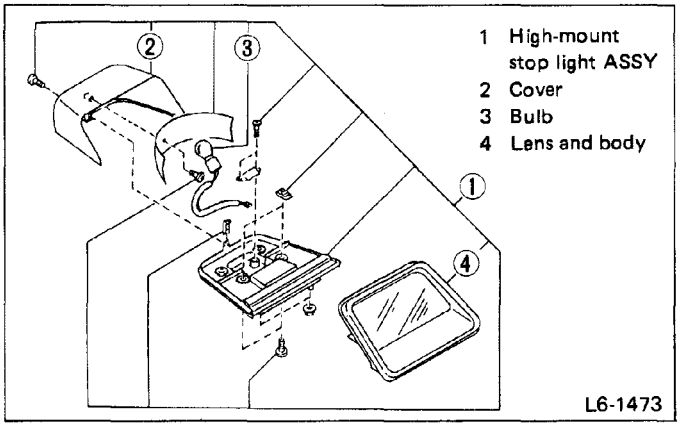

Fig. 6

License Plate Light

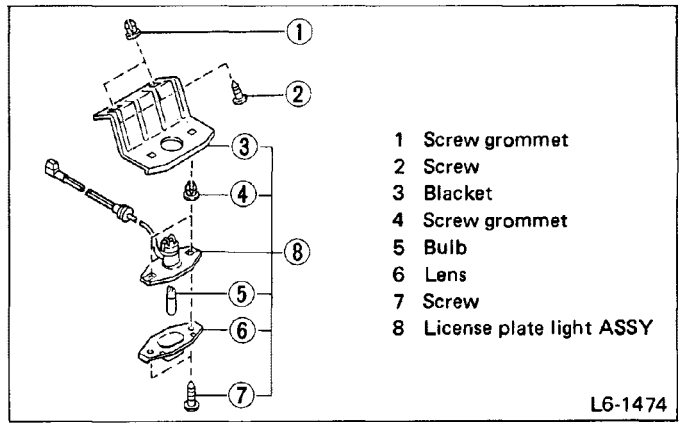

Fig. 7

Room Light

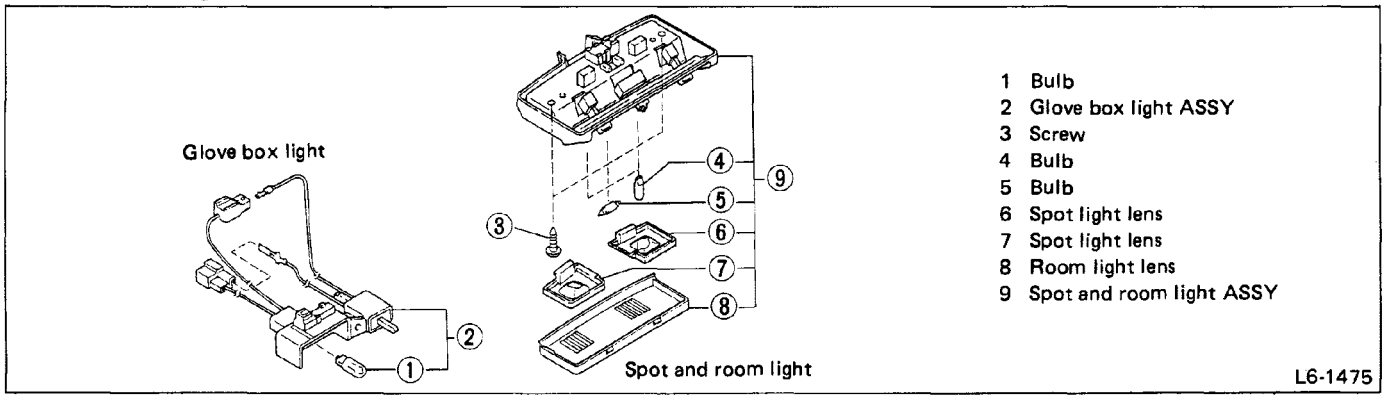

Fig. 8

Wiper

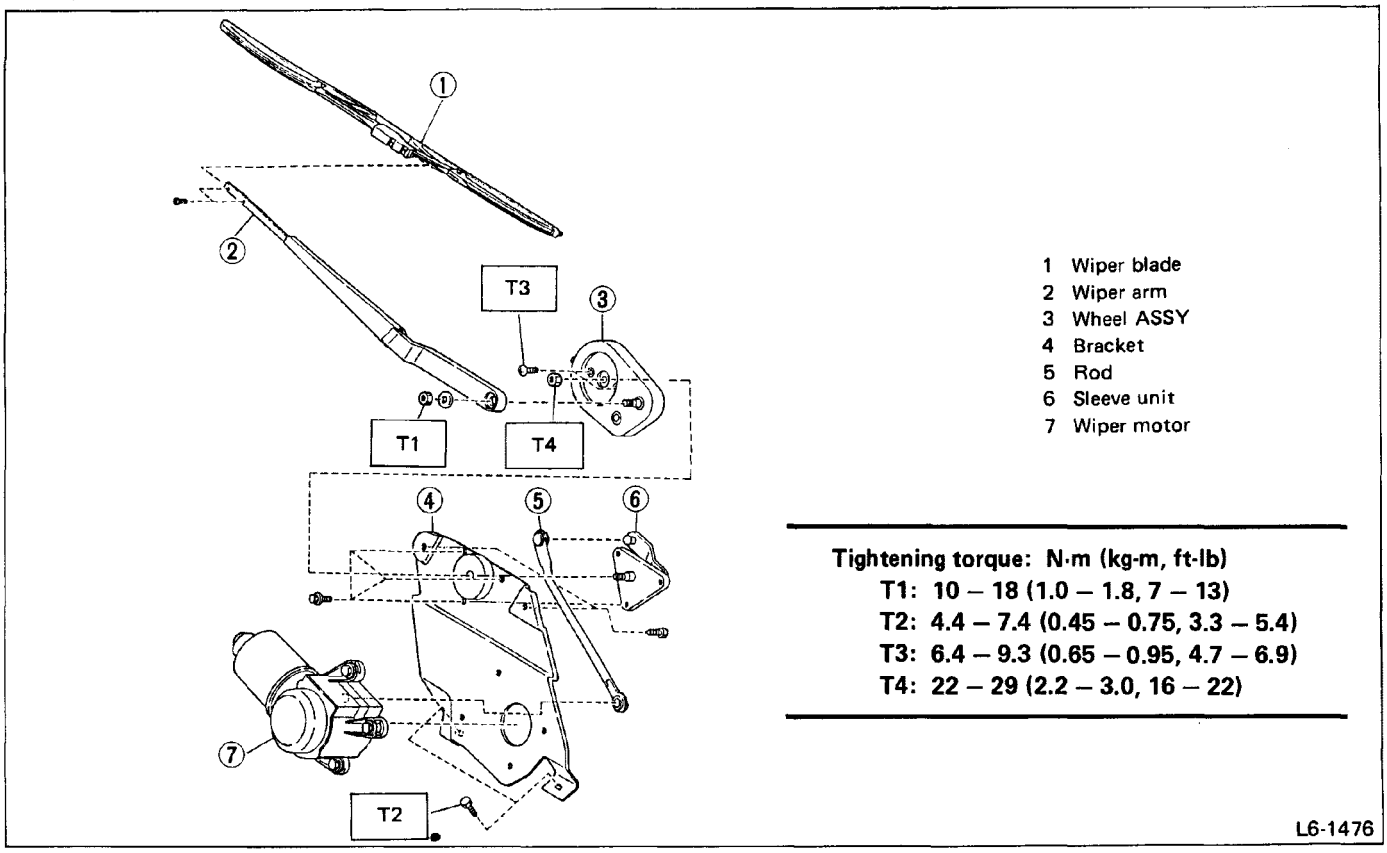

Fig. 9

Window Washer

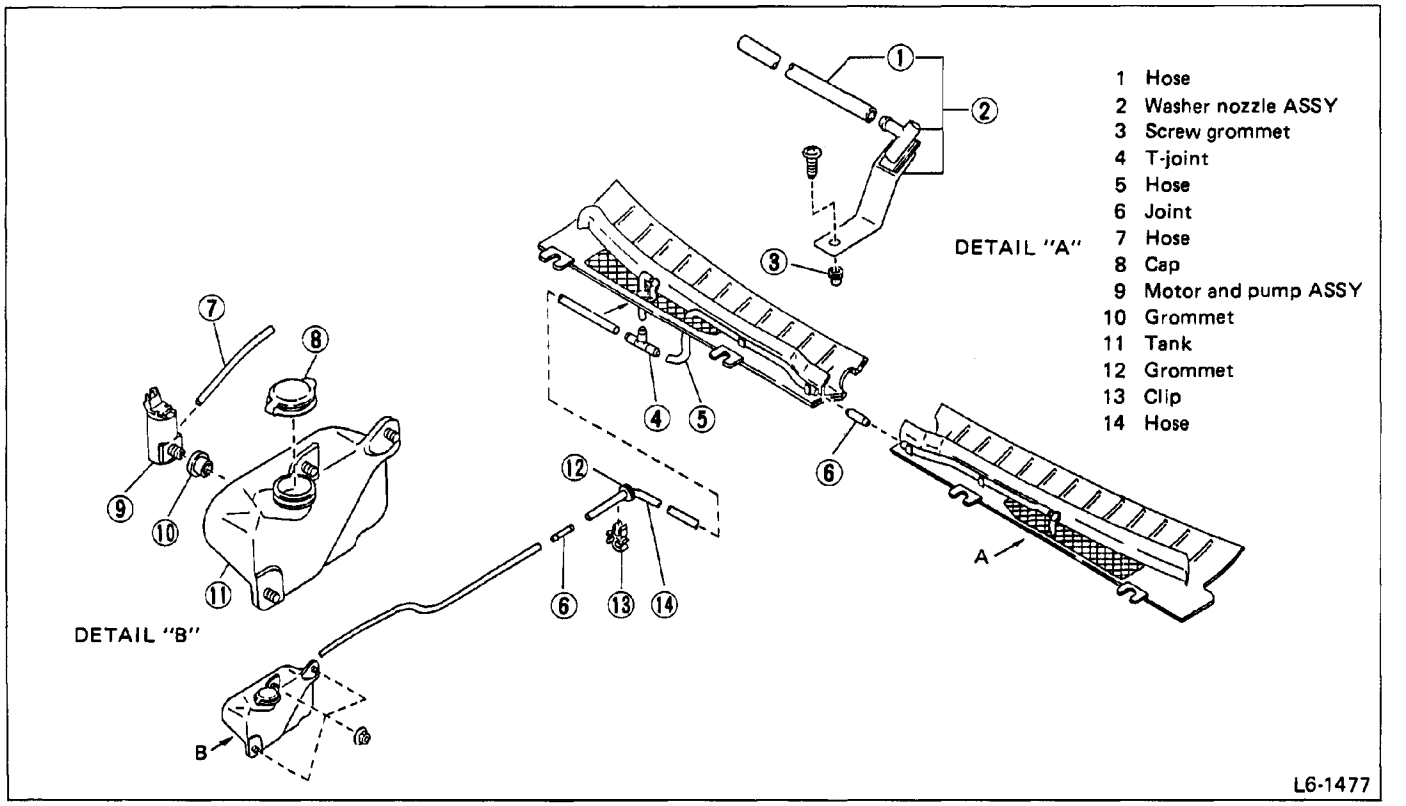

Fig. 10

Headlight Washer

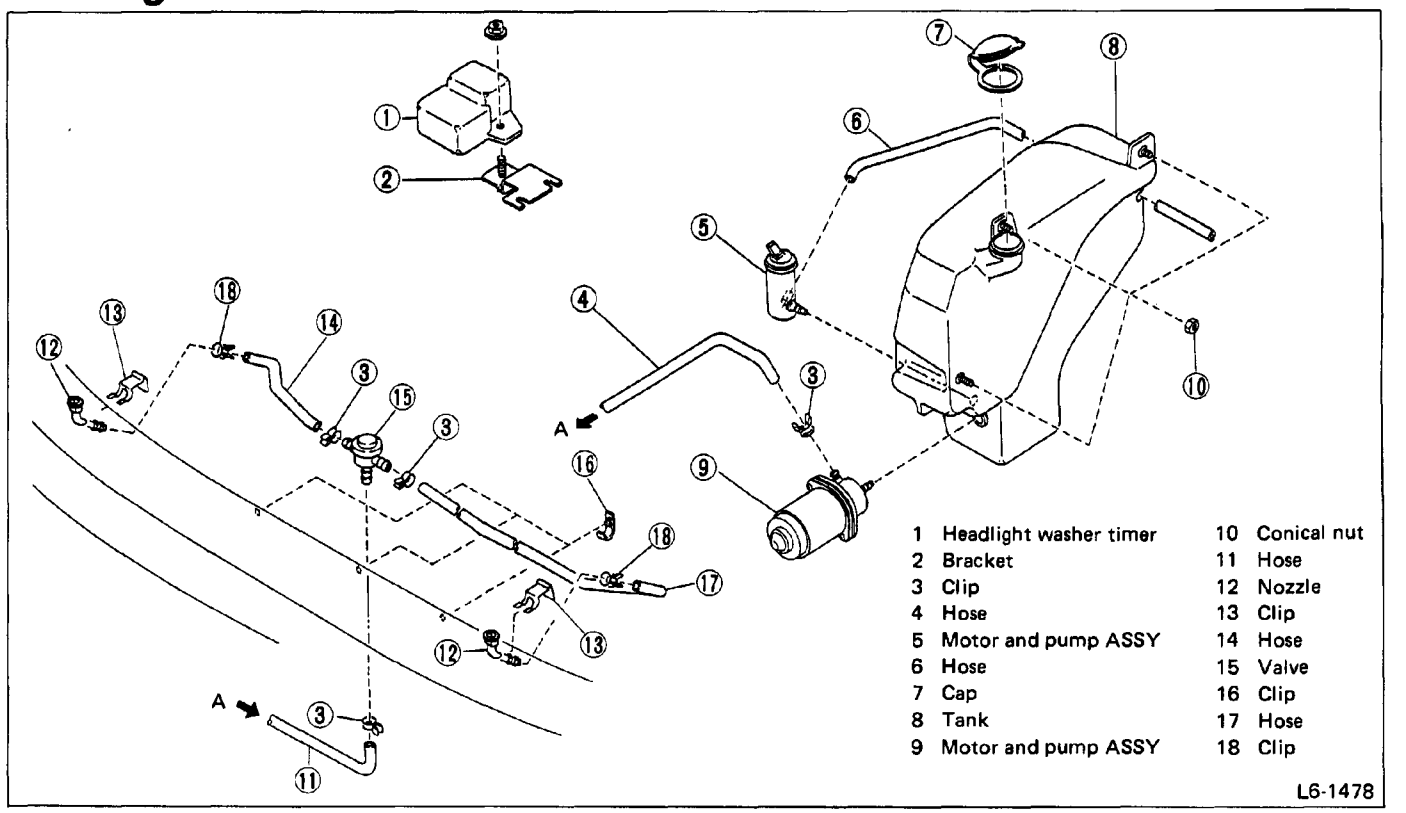

Fig. 11

Electrical Equipment

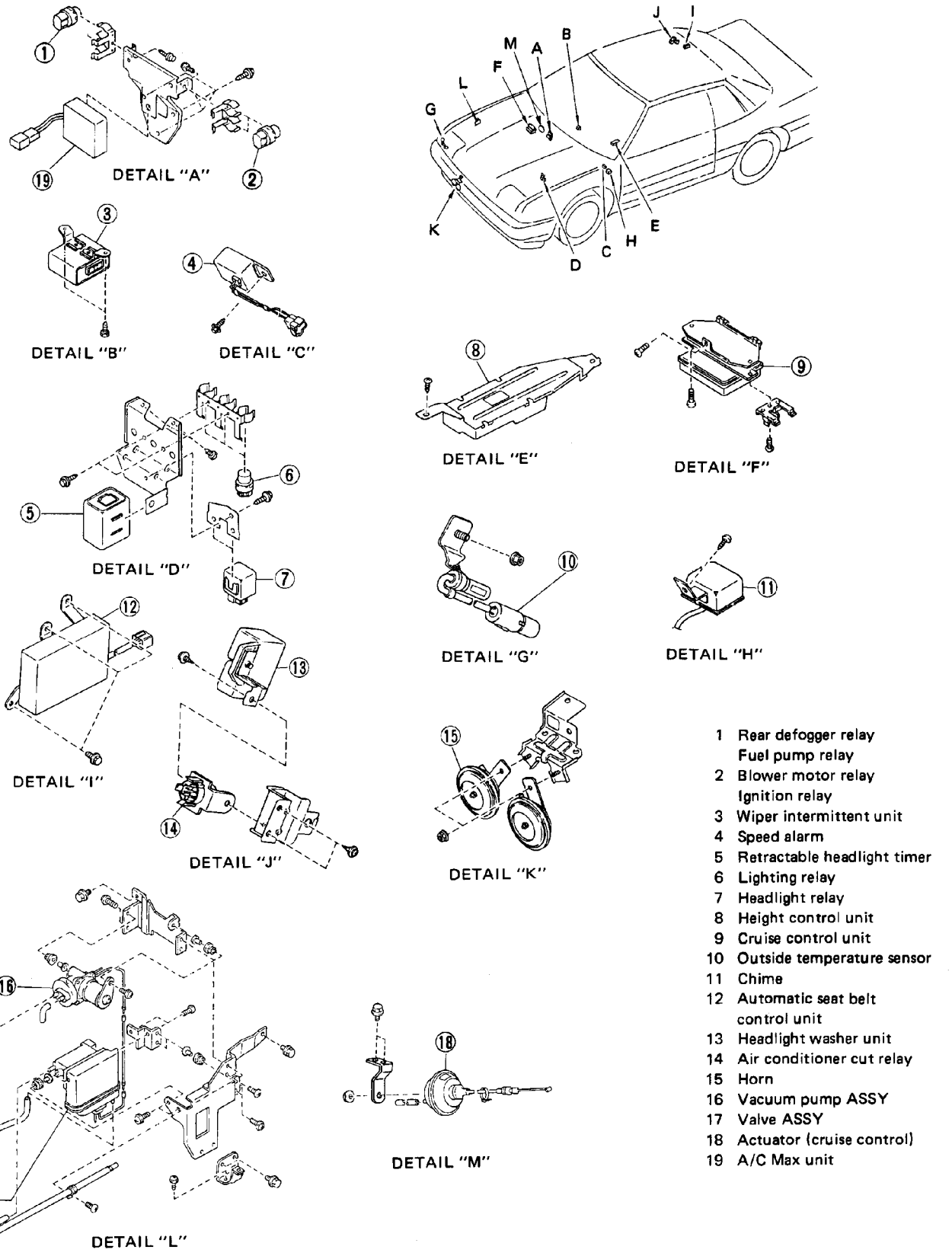

1 Rear defogger relay
Fuel pump relay
2 Blower motor relay
Ignition relay
3 Wiper intermittent unit
4 Speed alarm
5 Retractable headlight timer
6 Lighting relay
7 Headlight relay
8 Height control unit
9 Cruise control unit
10 Outside temperature sensor
11 Chime
12 Automatic seat belt control unit
13 Headlight washer unit
14 Air conditioner cut relay
15 Horn
16 Vacuum pump ASSY
17 Valve ASSY
18 Actuator (cruise control)
19 A/C Max unit

L6-1757

Fig. 12

SERVICE PROCEDURE

Battery

REMOVAL AND INSTALLATION

1) Disconnect the positive (+) terminal after disconnecting the negative (−) terminal of battery.
2) Remove flange nuts from battery rods and take off battery holder.
3) Remove battery.
4) Installation should follow the removal procedure in the reverse order.

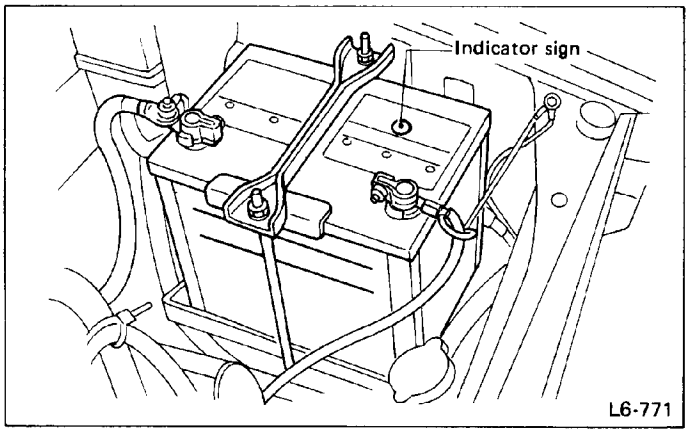

Fig. 13

a. Clean battery cable terminals and apply grease to retard the formation of corrosion.
b. Connect the positive (+) terminal of battery and then the negative (−) terminal of the battery.

INSPECTION

1) External parts
Check for the existence of dirt or cracks on the battery case, top cover, vent plugs, and terminal posts. If necessary, clean with water and wipe with a dry cloth.
Apply a thin coat of grease on the terminal posts to prevent corrosion.
2) Electrolyte level
Check the electrolyte level in each cell. If the level is below MIN LEVEL, bring the level to MAX LEVEL by pouring distilled water into the battery cell. Do not fill beyond MAX LEVEL.

a. Electrolyte has toxicity; be careful handling the fluid.
b. Avoid contact with skin, eyes or clothing. Especially at contact with eyes, blush with water for 15 minutes and get prompt medical attention.
c. Batteries produce explosive gasses. Keep sparks, flame, cigarettes away.
d. Ventilate when charging or using in enclosed space.
e. On the 75D23R battery, peel off the label along the cutting line, remove the cap and add distilled water.

3) Specific gravity
Indicator is provided for checking the specific gravity and the battery condition.

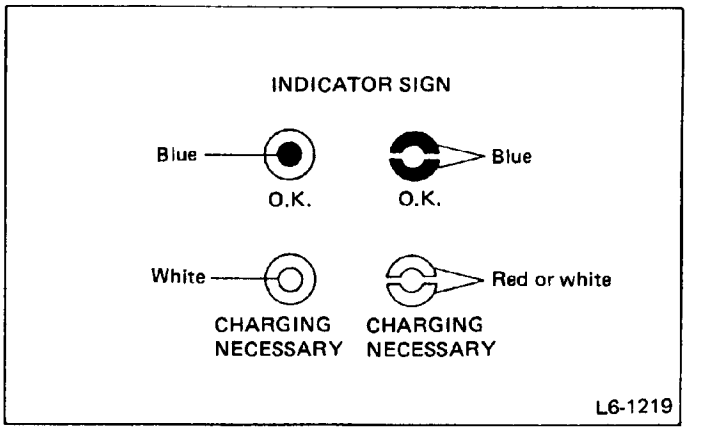

Fig. 14

"OK"	Charged condition Specific gravity > 1.15
"Charging necessary"	The battery must be recharged when engine does not start. Specific gravity < 1.15

4) Voltage under high discharge
Charging (or discharging) the battery raises (or lowers) the voltage but after stopping the charging (or discharging) the voltage gradually varies and finally settles at about 2 volts per cell. Therefore, to check the real condition of the battery, it is necessary to measure the voltage with the battery under high discharge. A simple method is the use of a high-discharge battery tester.
Check that the individual cell voltages are more than 1.5 volts and the voltage differences between the cells are within 0.1 volt when the measurements are made for 5 seconds per cell.

CHARGING

Measuring the specific gravity of the electrolyte in the battery will disclose the state of charge of the battery. The relation between the specific gravity and the state of charge is as shown in figure.

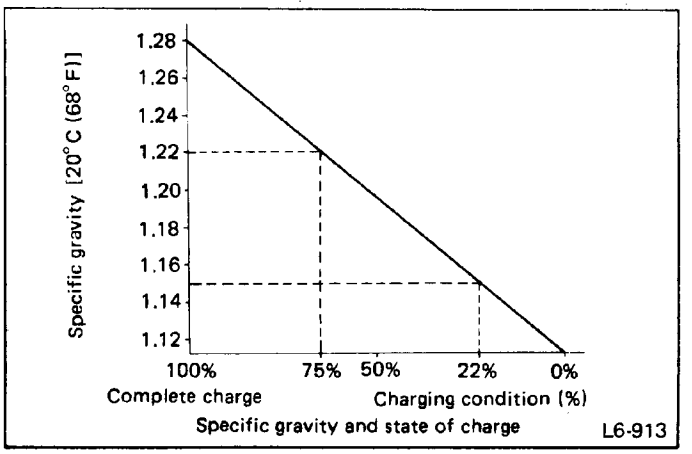

Fig. 15

1) Normal charging

a. Do not bring an open flame close to the battery at this time.
b. Prior to charging, corroded terminals should be cleaned with a brush and common baking soda solution.

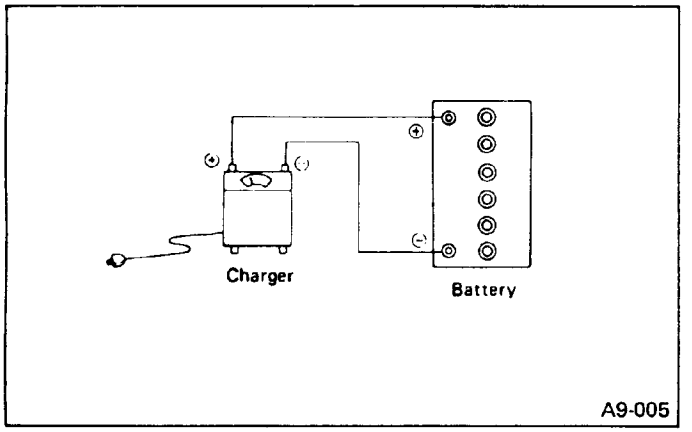

Fig. 16

The battery must be charged when indicator shows "charging necessary" and also engine does not start.
Perform charging for 5 hours or more with a constant current of 6A.
At the condition of full charged, the charging current is 0.5A or less.

2) Quick charging

Quick charging is a method in which the battery is charged in a short period of time with a relatively large current by using a quick charger.

Since a large current flow raises electrolyte temperature, the battery is subject to damage if the large current is used for prolonged time. For this reason, the quick charging must be carried out within a current range that will not increase the electrolyte temperature above 40°C (104°F).
It should be also remembered that the quick charging is a temporary means to bring battery voltage up to a fair value and, as a rule, a battery should be charged slowly with a low current.

a. Observe the items in NOTE in 1) Normal charging.
b. The battery should not be charged with 10A or more.

Fuse

FUSE BOX

The fuse box is located underneath of the instrument panel.
The connection between each fuse and main electrical units/devices is as shown in the following illustration. (Also refer to the wiring diagram at the end of this manual.)

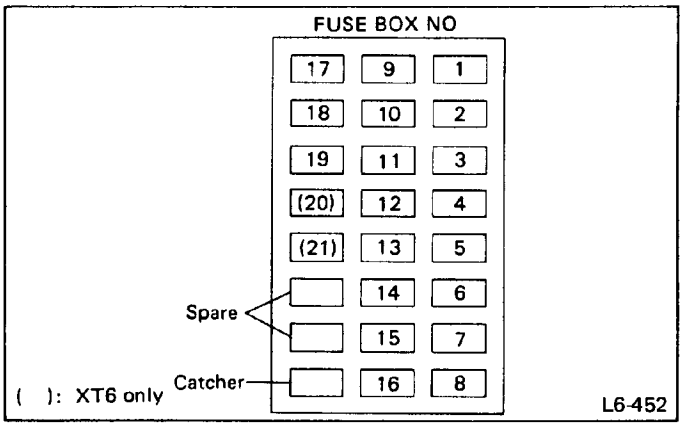

Fig. 17

a. When replacing fuse, be sure to use fuse of specified rating.
b. If fuse is blown, be sure to eliminate cause before installing new fuse in position.
c. Poor contact of any fuse holder will often lead to voltage drop or heating in the circuit or fuse holder and could result in blown fuse, so be careful with holder contacting and clean metal parts if necessary.

4WD-FWD SELECT FUSE

[4WD-AT model only]

For changing from 4WD to the FWD drive mode during servicing, insert a 15-ampere fuse into the FWD fuse holder. The FWD pilot lamp on the combination meter will come on to indicate that the vehicle is set in the FWD drive mode.

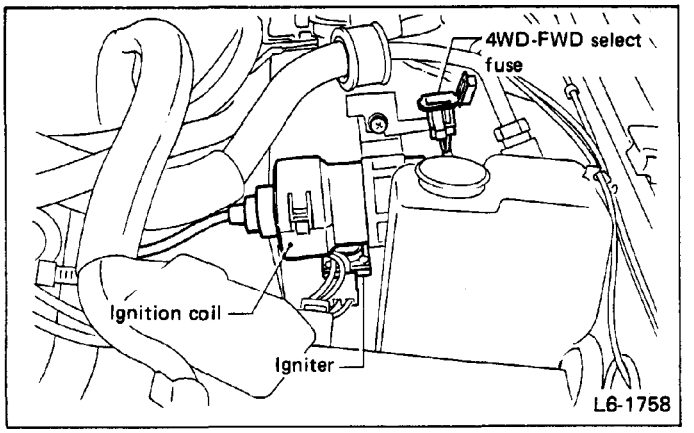

Fig. 18

PRECAUTIONS WHEN INSTALLING OPTIONAL UNITS/DEVICES

1) If there is no designated spare terminals available, attach separate fuses and connect new wiring directly from the battery. Do not modify an existing wire harness.

2) Pay attention to the following points when connecting the new wiring.

(1) Determine the wire size according to the load of the optional units/devices to be installed.

Wire size	Allowable current (A)	
	Wiring through engine compartment	Other
0.3	–	7
0.5	6	12
0.85	8	16
1.25	10	21
2.0	14	28
3.0	19	38

(2) Always attach fuses to the new circuits. Determine the fuse capacity so that the load of the units/devices to be installed does not exceed 70% of the rated capacity.

(3) Route new harnesses as close as possible to the existing ones and secure them with clamps.

XT 6

No. 1 (15A)	Heater fan motor	Connecting to fusible link
No. 2 (15A)	Heater fan motor	
No. 3 (15A)	Stop light, High-mount stop light, Room light	
No. 4 (15A)	Parking light	
No. 5 (15A)	Hazard warning, Horn, Clock, Trunk room light	
No. 6 (15A)	License plate light, Tail light, Clearance light, Grove box light, Illumination light (Combination meter)	(Through lighting relay)
No. 7 (15A)	Headlight (LH)	
No. 8 (15A)	Headlight (RH), Headlight beam indicator light	
No. 9 (15A)	Charge indicator light, Brake fluid level warning light	Connecting to alternator
No. 10 (15A)	Turn signal light, Back-up light, AT control unit	Connecting to IG terminal of ignition switch
No. 11 (15A)	Ignition coil, EGI unit, Ignition relay, Fuel pump relay	
No. 12 (15A)	Fuel gauge, Temperature gauge, Power window relay, Automatic shoulder belt control unit	
No. 13 (15A)	Power steering control unit	
No. 14 (15A)	Radio	Connecting to ACC terminal of ignition switch
No. 15 (15A)	Cigarette lighter, Remote-controlled rear view mirror	
No. 16 (20A)	Wiper and washer switch	
No. 17 (20A)	Rear window defogger	Connecting to fusible link
No. 18 (15A)	Door lock switch, Pneumatic Suspension Solenoid	
No. 19 (15A)	Cruise control unit	Connecting to IG terminal of ignition switch
No. 20 (20A)	Condenser fan (sub fan) motor	Connecting to fusible link
No. 21 (20A)	Radiator fan motor	

Others

No. 1 (15A)	Heater fan motor	Connecting to fusible link
No. 2 (15A)	Heater fan motor	
No. 3 (15A)	Stop light, High-mount stop light, Room light	
No. 4 (15A)	Parking light	
No. 5 (15A)	Hazard warning, Horn, Clock, Trunk room light	
No. 6 (15A)	License plate light, Tail light, Clearance light, Grove box light, Illumination light (Combination meter)	(Through lighting relay)
No. 7 (15A)	Headlight (LH)	
No. 8 (15A)	Headlight (RH), Headlight beam indicator light	
No. 9 (15A)	Charge indicator light, Brake fluid level warning light	Connecting to alternator
No. 10 (15A)	Turn signal light, Back-up light, 4WD selector switch, AT control unit	Connecting to IG terminal of ignition switch
No. 11 (15A)	Ignition coil, EGI unit, Ignition relay, Fuel pump relay	
No. 12 (15A)	Fuel gauge, Temperature gauge, Power window relay, Automatic shoulder belt control unit	
No. 13 (15A)	Radio	Connecting to ACC terminal of ignition switch
No. 14 (15A)	Cigarette lighter, Remote controlled rear view mirror	
No. 15 (15A)	Radiator fan motor	
No. 16 (20A)	Wiper and washer switch	
No. 17 (20A)	Rear window defogger	Connecting to fusible link
No. 18 (15A)	Door lock switch	
No. 19 (15A)	Air suspension solenoid valve	

FUSIBLE LINK

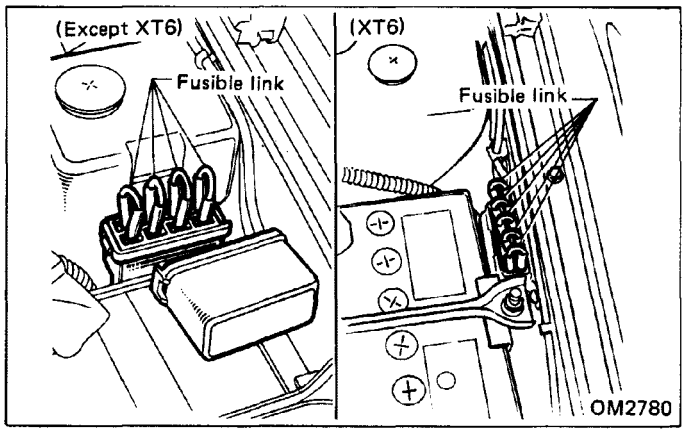

Fig. 19

If current increases beyond specified amperage, fusible metal melts and the circuit is broken, thus protecting cable and electrical equipment from burning.

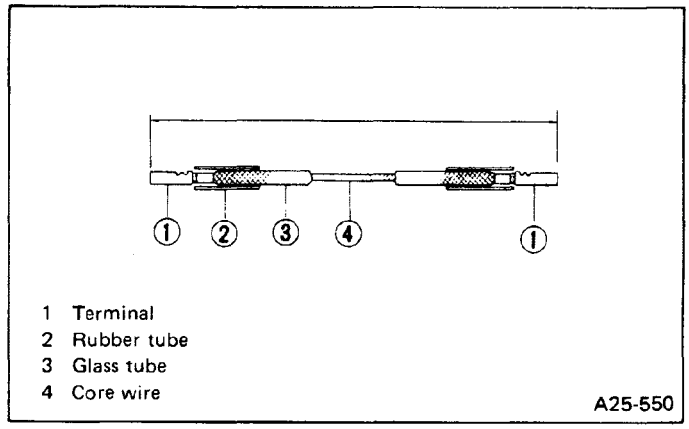

Fig. 20

Designation	Appearance	Quantity per vehicle
0.5 mm^2 (0.0008 sq in)	Green	2
0.85 mm^2 (0.00132 sq in)	Red	1
1.25 mm^2 (0.00194 sq in)	Black	1
2.0 mm^2 (0.0031 sq in)	Blue	1

a. When replacing fusible link, be sure to use one with the specified rating.
b. Blown fusible link is caused by short circuit in the source of electricity circuit or large amperage circuit, so certain check of cause and/or repair is necessary.

No.	Item	Nominal gauge size of conductor			
		0.5 mm^2 (0.0008 sq in)	0.85 mm^2 (0.00132 sq in)	1.25 mm^2 (0.00194 sq in)	2.0 mm^2 (0.0031 sq in)
1	Voltage drop	70 mV	60 mV	50 mV	40 mV
		Voltage drop across lug terminals should be less than the above value when a 10-ampere current flows through fusible link at room temperature.			
2	Melting Characteristics	Fusible link should melt within 15 seconds at a current flow of 80 amperes.	Fusible link should melt within 15 seconds at a current flow of 130 amperes.	Fusible link should melt within 15 seconds at a current flow of 190 amperes.	Fusible link should melt within 15 seconds at a current flow of 260 amperes.

Combination Meter

Warning and Indicator Lights

According to ignition switch position, each light will come on and/or go off under normal conditions as follows:

Ignition switch position		OFF	ACC	ON	ST	While engine is running
Retractable headlight indicator light	Raise	*	*	*	*	*
	Down	*	*	*	*	*
AT oil temperature warning light		OFF	OFF	ON	ON	OFF
Charge indicator light		OFF	OFF	ON	ON	OFF
Oil pressure indicator light (DL model only)		OFF	OFF	ON	ON	OFF
Stop light warning light		OFF	OFF	ON	ON	OFF
Brake fluid level warning		OFF	OFF	ON	ON	OFF
CHECK ENGINE warning light		OFF	OFF	•	•	OFF
STEERING warning light (XT6 only)		OFF	OFF	ON	ON	OFF

Symbols used: * Indicator light comes on while headlights are raised or lowered.
• Light comes on before engine starts, and stays off after engine stops.

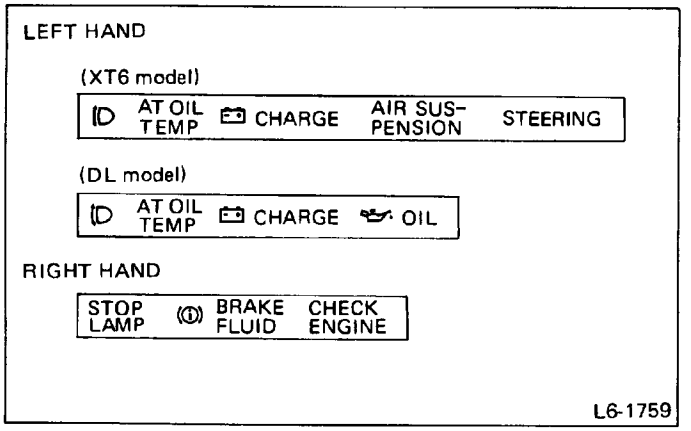

Fig. 21

Retractable Headlight Indicator Light

This indicator light turns on only when the headlight raise/down motor is in operation. It comes on and lights for about one second when the headlights pop up or down.

AT Oil Temperature Warning Light

The warning light is provided for the purpose of preventing overheating of torque converter fluid in case of repeated start-off operations in sand or on a snowy road, or when the car is operated at very low speed (near the stall speed) continuously under heavily loaded conditions.

If the temperature of the fluid at the torque converter outlet exceeds 150°C (302°F), the warning lamp "AT OIL TEMP" will illuminate and warn the driver of high oil temperature.

In such a case, the driver need not stop the car, but should avoid undue operation. The warning light will go out as the fluid temperature drops.

The thermoswitch is installed on the side of the extension case.

Charge Indicator Light

The light indicates the alternator and charging system operating condition.

If there is something wrong with the alternator and charging system, the light will come on while the engine is running.

Oil Pressure Indicator Light (DL model only)

Oil pressure indicator light indicates whether or not oil pump is feeding oil under normal pressure to various parts of engine. Indicator light is operated by oil pressure switch located in lubricating system.

Stop Light Warning Light

The light is connected to the stop light checker. This checker consists of a reed switch and magnet coils ① and ②, as shown in figure. Under normal conditions, the magnetic fields are generated in the magnet coils ① and ② by the current flowing through each light while the stop light switch is ON. These magnetic fields cancel each other because the coils turn in directions opposite to each other. As a result, the reed switch will remain OFF, and the warning light is OFF. If either the left or right hand side stop light fails, current will flow through only one magnet coil, and the resultant magnetic field causes the reed switch to turn ON. Therefore, the warning light will remain lighted as long as the brake pedal is depressed.

The light will not come ON if both right and left lamp bulbs burn out simultaneously.

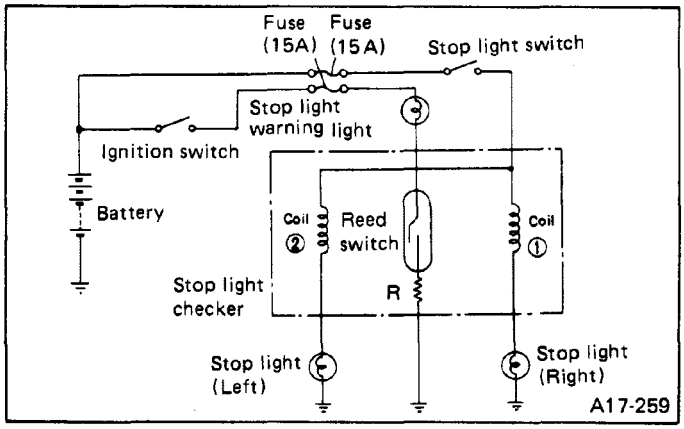

Fig. 22

Brake Fluid Level Warning Light

The light is connected to the brake fluid level sensor that is incorporated in brake fluid reserve tank.
If brake fluid decreases to less than the specified volume in the reservoir, the sensor is actuated and the light comes on while the engine is running.

Total brake fluid volume in reservoir:
180 cm³ (180 cc, 10.98 cu in)
Remaining volume when brake fluid level warning light glows:
Approx. 90 cm³ (90 cc, 5.49 cu in)

a. For checking if bulb of brake fluid level warning light is burned out, make sure that the warning light glows when ignition switch is initially turned to "ON" and it goes out when engine is running.
b. If brake fluid reservoir is inclined or vibrated abnormally, the warning light may be lighted momentarily even fluid level is above the specified limit.

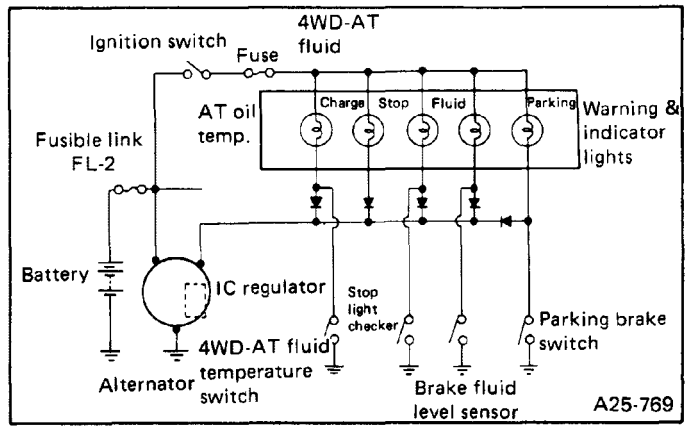

Fig. 23

CHECK ENGINE Warning Light

The warning light is provided for the purpose of indicating the condition of the MPFI system. If the MPFI system is faulty, the warning light will come on while the engine is running. For troubleshooting, refer to the chapter titled "2-7 Fuel Injection System".

STEERING Warning Light

This light comes on when trouble occurs in electronic-controlled motor drive power steering system while engine is running. It also functions as a monitor light when diagnosing the steering system. For troubleshooting, refer to Chapter 4-3 "Steering System".

Low Fuel Indicator Light

The indicator light is operated by thermistor incorporated in fuel unit on fuel tank, and goes on when amount of gasoline in fuel tank is less than the specified volume as shown below.

All models:
9 ℓ (2.4 US gal, 2.0 Imp gal)

Telltale (Graphic Monitor)

According to ignition switch position, each light will come on and/or go off under normal conditions as follows:

Ignition switch position			OFF	ACC	ON	ST	While engine is running
1	DIFF LOCK indicator light	Lock	OFF	OFF	ON	ON	ON
		Unlock	OFF	OFF	OFF	OFF	OFF
	Front wheel drive indicator light	FWD	OFF	OFF	ON	ON	ON
		4WD	OFF	OFF	OFF	OFF	OFF
2	Fasten seat belt warning light		OFF	OFF	○	○	OFF
3	Parking brake warning light	Engage	OFF	OFF	ON	ON	ON
		Disengage	OFF	OFF	ON	ON	OFF
4	Headlight beam indicator light	High-beam	OFF	OFF	ON	ON	ON
		Low-beam	OFF	OFF	OFF	OFF	OFF
5	Power mode indicator light		OFF	OFF	OFF	OFF	△
6	AT selector position indicator light		OFF	OFF	ON	ON	ON
7	First hold indicator light	Engaged (Hold)	OFF	OFF	□	□	□
		Disengaged (Not Hold)	OFF	OFF	OFF	OFF	OFF
8	Height control indicator light (Canada model only)	Disengaged (Normal position)	OFF	OFF	OFF	OFF	OFF
		Engaged (High position)	OFF	OFF	ON	ON	ON
9	Door lock indicator light	Lock	OFF	OFF	OFF	OFF	OFF
		Unlock	OFF	OFF	ON	ON	ON
10	Door ajar warning light	Open	OFF	OFF	ON	ON	ON
		Shut	OFF	OFF	OFF	OFF	OFF
11	Rear defogger indicator light	Engage	OFF	OFF	ON	ON	ON
		Disengage	OFF	OFF	OFF	OFF	OFF

Symbols used: ○ Light comes on only for 6 seconds.
□ When the first hold switch has been set to ON with the select lever in position "2", the indicator light is illuminated.
△ Immediately after engine starts, indicator light comes on. It soon goes out. It also comes on when the AT power mode is selected.

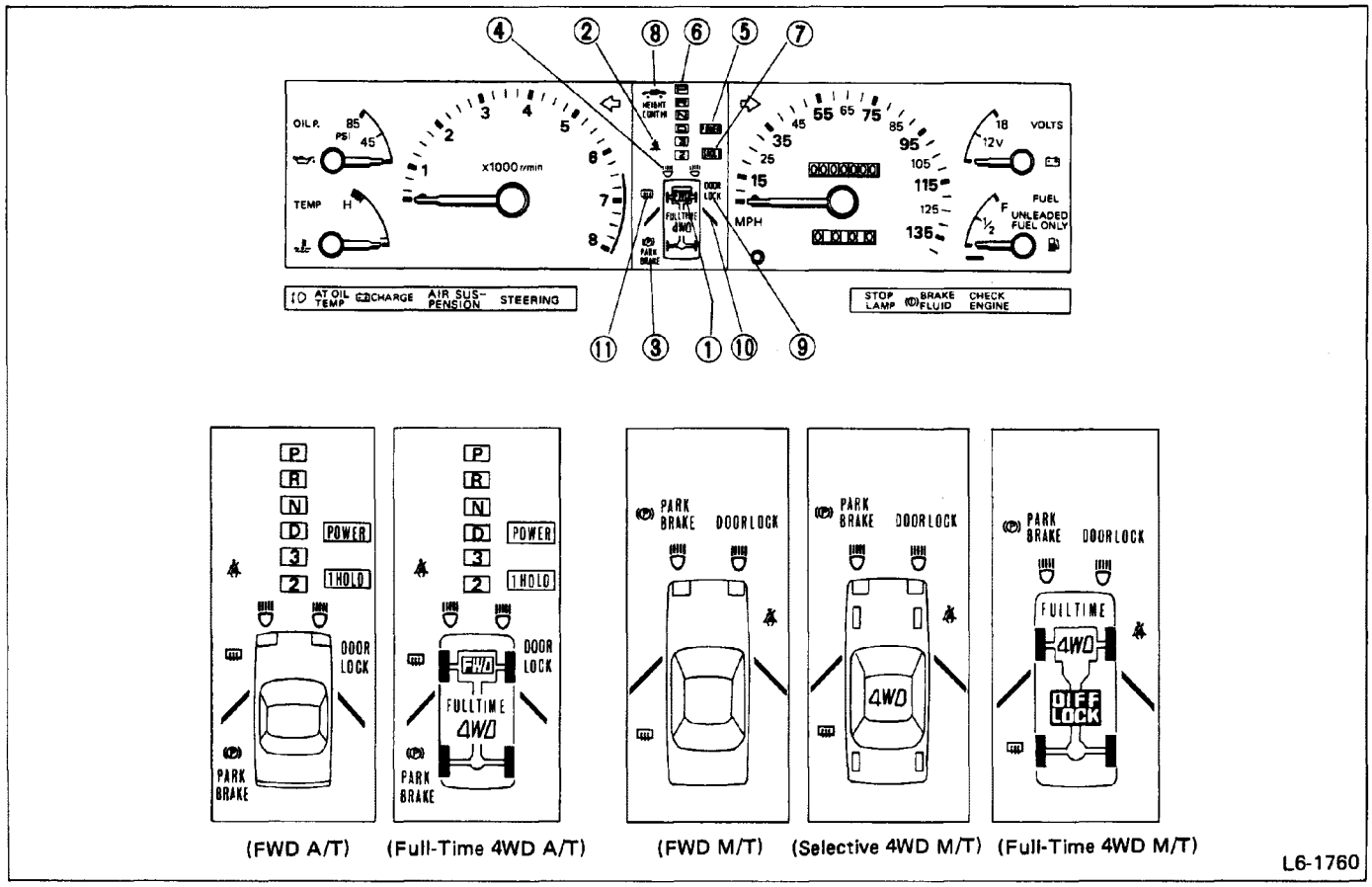

Fig. 24

Analogue Meter

REMOVAL AND INSTALLATION

For procedures used to remove and install meters, refer to Chapter 4-3 "Steering System".

Be sure to disconnect earth cable from negative (minus) terminal of battery previously.

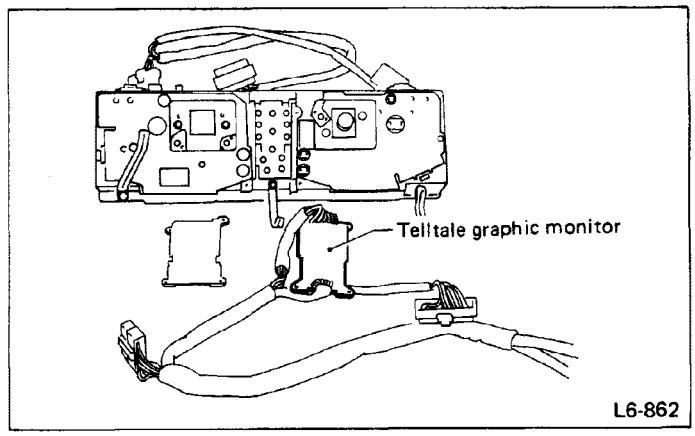

Fig. 25

DISASSEMBLY & ASSEMBLY

1) Remove trip knob by pulling it out.
2) Disconnect wire harness connector from back of meter ASSY.
3) Remove screws and detach telltale graphic monitor.
4) Remove screws and detach meter visor, meter glass and window plate.
5) Remove screws, and detach meters and gauges.

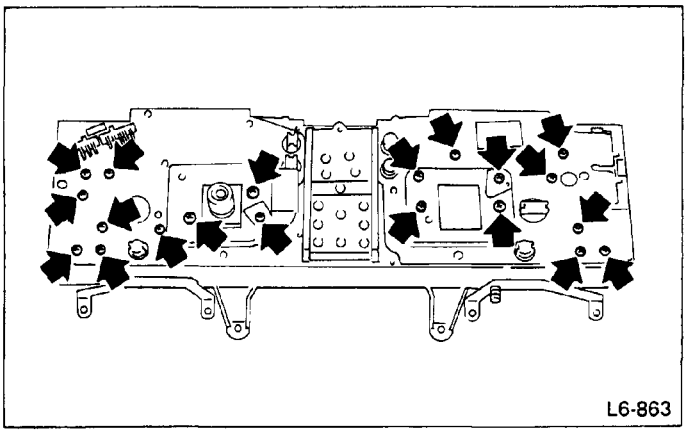

Fig. 26

6) Remove indicator & warning unit from meter visor.

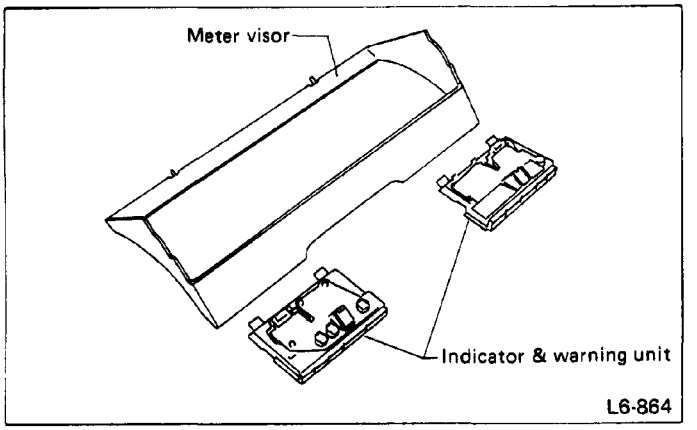

Fig. 27

7) To assemble, reverse disassembly procedures.

INSPECTION

SPEEDOMETER

It is normal if the readings of speedometer are within the tolerances shown in the table 1, against the standard indicated speeds on the speedometer tester.
Besides, speedometer should point as shown in the table 2.

Table 1

Standard indicated speed (km/h or MPH)		20	40	60	80
Readings of speedometer	(km/h)	17.9 – 20.9	38.3 – 40.3	56.1 – 60.2	75.6 – 79.6
	(MPH)	17.9 – 20.9	38.3 – 40.3	56.1 – 60.2	75.6 – 79.6

Table 2

Speedometer should point	Meter drive shaft speed
60 km/h	637.5 rpm
60 MPH	1,020 rpm

TEMPERATURE GAUGE

Temperature gauge (cross coil type) is operated by thermistor incorporated in temperature sending unit installed in intake manifold.
Since thermistor resistance changes with voltage, voltage regulator is provided to prevent error in gauge indication due to voltage fluctuation.

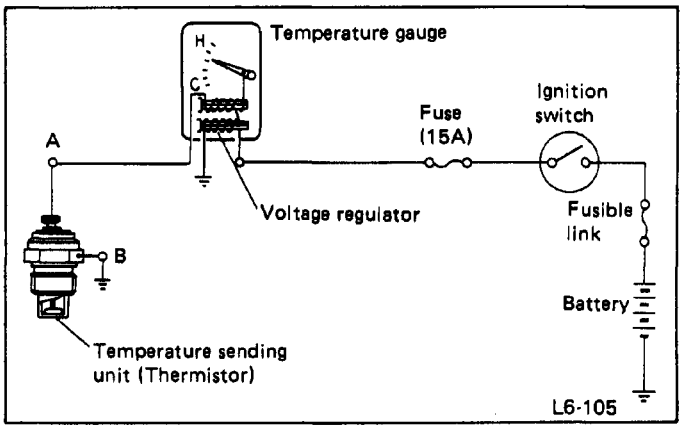

Fig. 28

It is normal if the readings of temperature gauge are within the tolerances of engine coolant temperature as shown in the following table against the standard resistance between point A and B indicated in the wiring diagram when ignition switch is "ON".

Readings of temperature gauge	Standard resistance	Temperature of engine coolant
50°C (122°F)	153.9Ω	34 – 62°C (93 – 144°F)
120°C (248°F)	(16.1Ω)	116 – 123°C (241 – 253°F)

Besides, standard resistance of temperature gauge is 45Ω.

FUEL GAUGE

Needle of fuel gauge remains indicating the amount of fuel in fuel tank after turning igniton switch to OFF position.

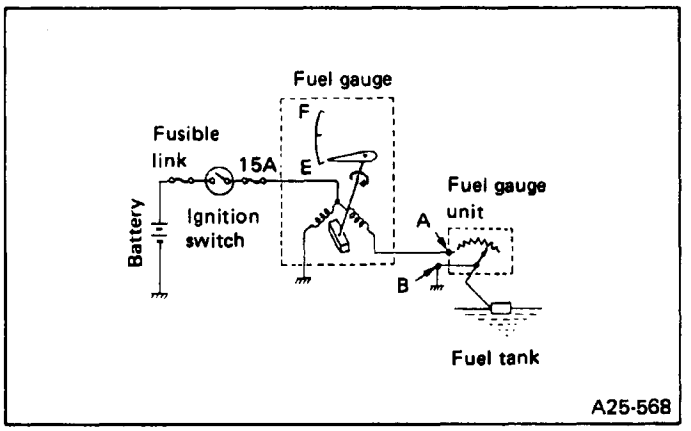

Fig. 29

It is normal if the readings of fuel gauge are within the tolerances of all length between "E" and "F" as shown in the following table, against the standard resistance between point A and B indicated in the wiring diagram when ignition switch "ON".

Reading of fuel gauge	Standard resistance	Tolerance of fuel gauge
E	7.0Ω	+1/12 to −1/24 of all length between "E" and "F"
1/2	(32.5Ω)	–
F	95Ω	+1/24 to −1/12 of all length between "E" and "F"

TACHOMETER

It is normal if readings of tachometer are within the tolerances as shown in the following table, against the standard indicated speeds on tachometer tester.
Also, tachometer should point 5,000 rpm when distributor speed is 2,500 rpm.

Standard indicated speed (rpm)	1,000	2,000	3,000	4,000	5,000	6,000
Tolerance (rpm) −20 to 60°C (−4 to 140°F)	940 to 1,090	1,955 to 2,145	2,970 to 3,200	3,980 to 4,250	4,990 to 5,305	6,000 to 6,360

OIL PRESSURE GAUGE

Oil pressure gauge (bimetal type) is operated by oil pressure unit (bimetal type) located in lubricating system.
It is normal if the readings of oil pressure gauge are within the tolerances as shown in the following table, against the standard indicated pressure values on oil pressure gauge.

Input	0 mA	75 mA
Standard indication	0 psi	45 psi
Indication tolerance	+1.5°, −3.5°	+4.5°, −5.5°

VOLTMETER

It is normal if the readings of voltmeter are within the tolerances as shown in the following table, against the standard indicated values on voltmeter.

Standard indicated Voltmeter values (V)	8	12	16
Tolerance (V)	7 – 8	11.4 – 12.6	15 – 17

Trip Computer (XT6 Only)

The trip computer essentially consists of three units – control unit, display unit and circuit unit. (On XT models, the control unit and the display unit are unitized.)
The control unit contains the "CLOCK", "ALARM", "OUT TEMP", "TRIP", "ARRIVE" and "AVG. SPEED" push-buttons. It also contains a "self-diagnosis" function. Pressing a pushbutton will display a computed result of its corresponding function on the display unit.

All information ("TRIP", "ARRIVE" and "AVG. SPEED") concerning traveling distance appears on the display in Miles for US models and kilometers for Canada models.

Connector		Connection
Terminal	Color	
1	White	Battery
2	Red	Ignition switch
3	Black	Grounding
4	Yellow	Car speed pulse
5	Red/Black	Out temperature ⊖
6	–	–
7	Green	Illumination grounding
8	Brown	Power source (Illumination light)
9	Blue	Out temperature ⊕

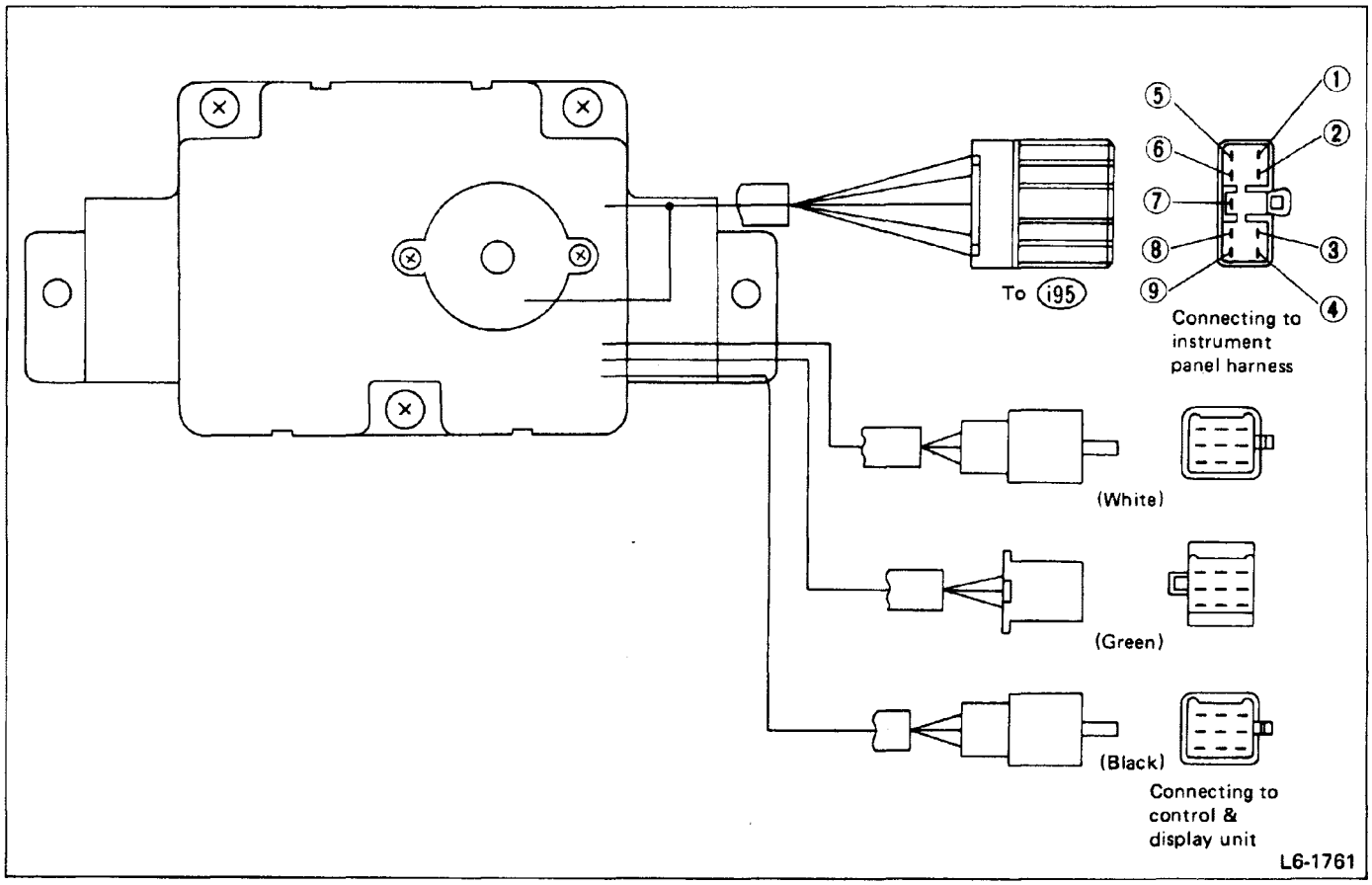

Fig. 30

OPERATION AND FUNCTION

TRIP

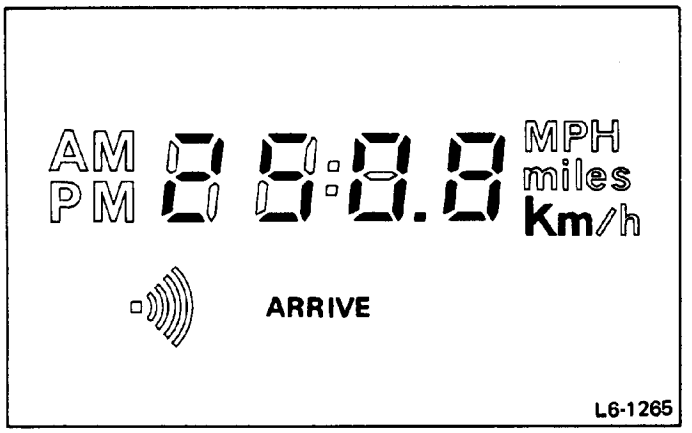

Fig. 31

Display	The travelled distance is shown by four digits of the 7-segment figures. While distance is being displayed, the TRIP button on the control unit is illuminated. "0" as a high-order digit is indicated by a blank.
Display range	<table><tr><th></th><th>Unit</th><th>Display range</th><th>Interval displayed</th></tr><tr><td>Mile</td><td>miles</td><td>0.0 – 999.9</td><td>0.1 mile</td></tr><tr><td>km</td><td>km</td><td>0.0 – 999.9</td><td>0.1 km</td></tr></table>
Function	• The travelled distance is displayed when the TRIP button is depressed. • If the "RESET" switch is depressed for more than 1.2 seconds in the TRIP functions, display returns to "0.0", and clocking of distance starts again in units of 0.1. • In case of overflow in the display, i.e., more than 999.9 is travelled the display returns to "0.0", and then continues. • While the ignition switch is turned to ON, counting is performed if an other function button is depressed. • The count increases by 1.0 km each time 637.5 x 4 pulses are applied. • The count increases by 1.0 mile each time 1020 x 4 pulses are applied. • "0.0" is displayed immediately after the battery is connected. (No memory is retained when the battery is disconnected.)

ARRIVE

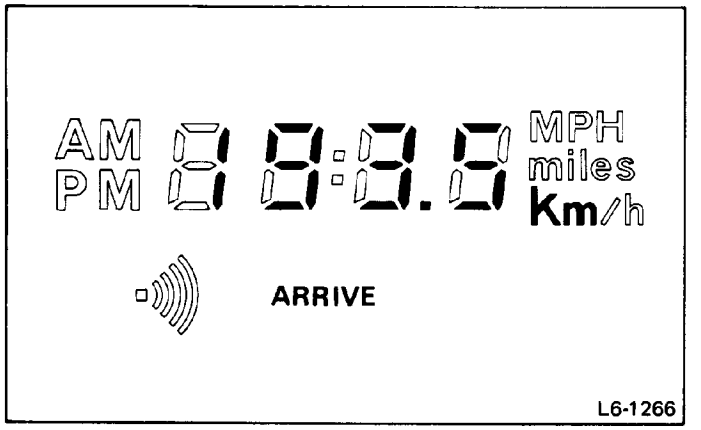

Fig. 32

Display	• The distance left to go is shown by four digits of the 7-segment figures. While the distance is being displayed, the ARRIVE button on the control unit is illuminated. "0" as a high-order digit is indicated by a blank, except when resetting.
Display range	• Same as the display range of the TRIP function.
Function	• The distance left to go is displayed when the ARRIVE button is depressed. • After presetting, count down in units of 0.1 starts.
Display of ARRIVE	• The ARRIVE display illuminates for six minutes when "0.0" has been reached, then extinguishes. The display also goes out when the ignition switch is turned to OFF; and will not reilluminate when the switch is turned to ON again. The ARRIVE display illuminates even if another function is being displayed. At the same time, the buzzer turned to sounds for 3 seconds. • While the ignition switch is turned to ON, counting continues if the other function button is depressed. • The count decreases by 1.0 km each time 637.5 x 4 pulses are applied. • The count decreases by 1.0 mile each time 1020 x 4 pulses are applied. • The indication immediately after connecting the battery is undefined.
Resetting	1) The resetting function is attained when "100", "10", "1" or "0.1" switches are depressed while the ARRIVE function is selected. This mode is cancelled 10 seconds after operating these switches, or when the ARRIVE button is depressed. 2) No counting of ARRIVE function is performed during the resetting mode. 3) When resetting, counted contents less than 0.1 are cleared. 4) The "100", "10", "1" or "0.1" switches function independently, and no carrying over is made at any digit position. 5 → 6 - - → 9 → 0 → 1 → 2 - - - - - - → The upper digit remains unchanged. 5) When the "100", "10", "1" or "0.1" switch is held in, the displayed number changes in sequence for each 0.5 second for the first 1.5 second period, and for each 0.25 second afterward. The number increases by one when the switch is depressed once.

CLOCK

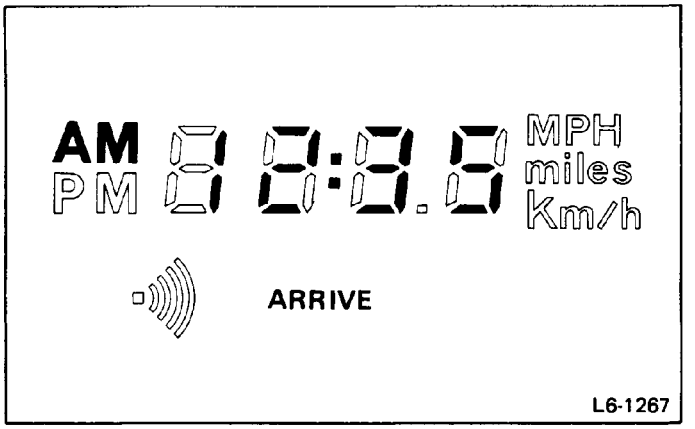

Fig. 33

Display	• The current time is displayed by "AM", "PM", and four digits of the 7-segment figures. While the time is displayed, the CLOCK button on the control unit is illuminated. When the alarm time is being displayed, the ALARM button on the control unit is illuminated. • "0" in the left digit of the "minute" position is displayed as "0", but the "0" in the left digit of the "hour" position is displayed by a blank. Example: AM 8 hours 3 minutes . . . . . AM 8 : 03
Display range	<table><tr><th></th><th>Display range</th><th>Minimum display unit</th></tr><tr><td>AM PM</td><td>1 : 00 to 12 : 59</td><td>1 MINUTE</td></tr></table>
Function	• The time is displayed when the CLOCK button is depressed. • The "AM" or "PM" display flashes once a second with the duty ratio of 50%. • The time is counted continuously as long as the battery is connected, irrespective of the display on the display unit. • Immediately after connecting the battery, the display is "PM 1 : 00", which flashes once a second with the duty ratio of 50%.
Time resetting	1) The "H", "10M", "M", and "SET" switches function only in the CLOCK function. This mode is cancelled when the "SET" switch is depressed. 2) Time is being counted even during the time resetting operation. 3) When the "SET" switch is depressed, the CLOCK display is set to a time signal. 0 to 29 second is rounded off (Ex. $10:00^{29} \rightarrow 10:00^{00}$) 30 to 59 second is carried forward (Ex. $9:59^{35} \rightarrow 10:00^{00}$) 4) The "H", "10M", and "M" switches function independently and no carrying over is made from the unit to tens place in the minute range, nor from minute nine to hour position. 5) If "12" is displayed when the "H" switch is depressed, "AM" changes to "PM", and "PM" to "AM". 6) If "H", "10M", or "M" switch is held in, the displayed number changes for each 0.5 second for the first 1.5 seconds, then for each 0.25 second afterward. The number increases by one when the switch is depressed once.

ALARM

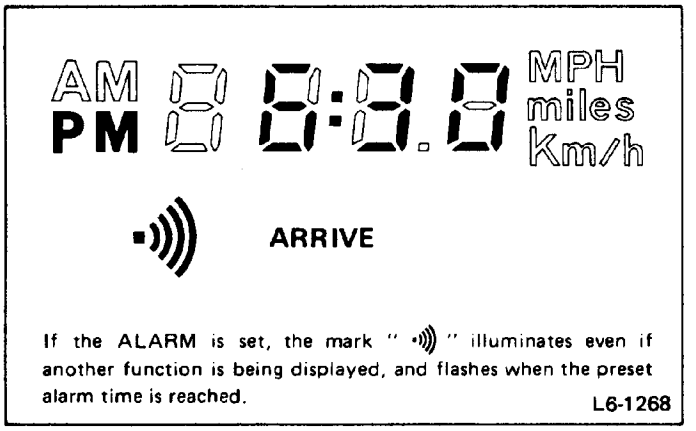

Fig. 34

Time alarm	1) When the ALARM button on the control unit is depressed, it illuminates. If the ALARM is presetted, the mark " •))) " and alarm time are displayed. This state continues until the alarm is cancelled. Neither AM nor PM flashes. 2) When the preset alarm time is reached, the buzzer sounds for six minutes or until the alarm is cancelled even if another function is displayed on the display unit. (The buzzer issues a sound four times a second.) At the same time, the mark " •))) " flashes once a second with the duty ratio of 50%. 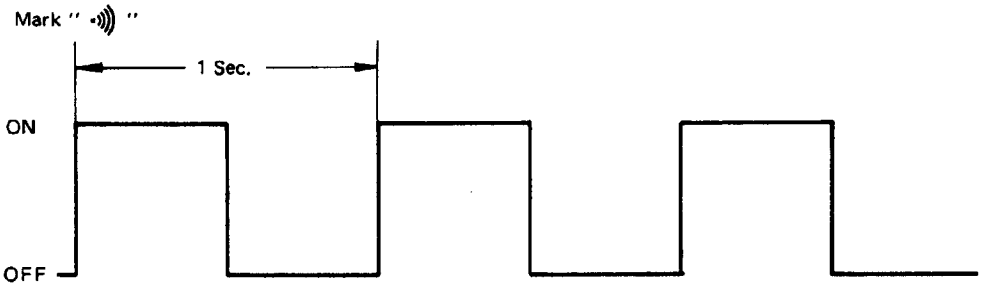 3) When the alarm time is being set, the mark " •))) " illuminates even if another function is being displayed. 4) When the ALARM switch is pressed, alarm stops. 5) In the ALARM mode, pressing the RESET switch cancels the "set" time.
Alarm Time Resetting	1) With ALARM button depressed, the alarm time can be reset by pushing the "H", "10M", and "M" switches. This resetting mode is cancelled 10 seconds after depressing these switches, or when the "SET" switch is depressed. If other function button is depressed within 10 seconds, this mode is cancelled after time setting. 2) If "12:" is displayed when the "H" switch is depressed, "AM" or "PM" changes as follows: AM → PM, PM → AM. 3) If the "H", "10M", or "M" switch is helding the displayed number changes for each 0.5 second for the first 1.5 seconds, and for each 0.25 second afterward. When pushed once, the displayed number changes by one.

OUT TEMP

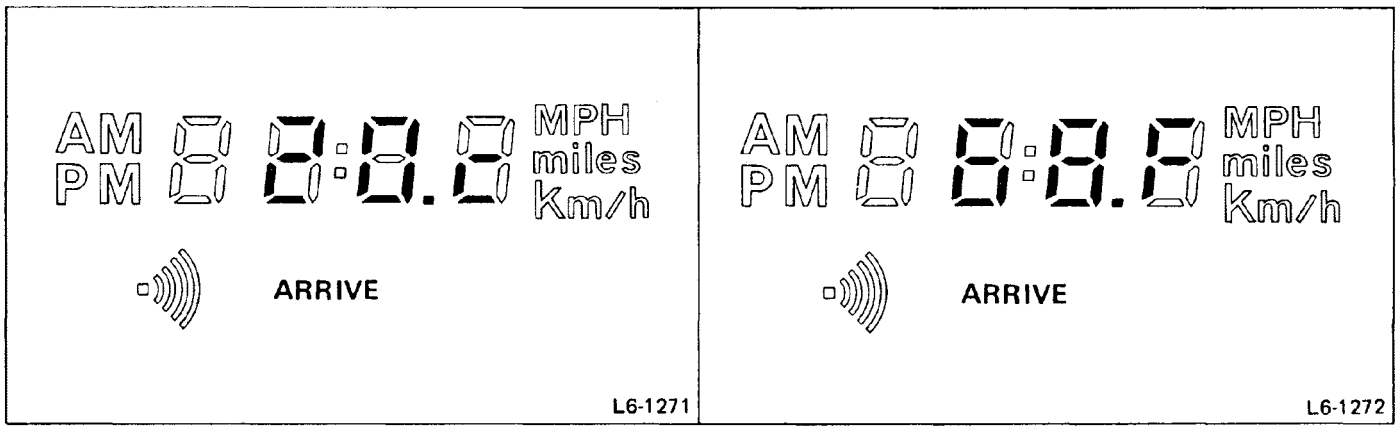

Fig. 35

Display

- The outside air temperature is displayed by three digits of the 7-segment display.
- The outside air temperature indicator on the control panel illuminates when OUT TEMP is displayed.
- The leading "0" in the tens or hundreds place is indicated by a blank.

Display range

°C: −30 to 80
°F: −24 to 176

Indication

°C indication

Display temperature (°C)	Resolution (°C)
−30 to −16	2
−16 to 30	1
30 to 80	2

°F indication

Display temperature (°F)	Resolution (°F)
−24 to 4	4
4 to 88	2
88 to 176	4

°C

Temperature (°C)	−20	20	60
Sensor resistance (kΩ)	50.53	6.244	1.244
Standard	−20±4	20±3	62±4

°F

Temperature (°F)	−4	68	140
Sensor resistance (kΩ)	50.53	6.244	1.224
Standard	−4±8	68±6	144±8

Response time	• When display temperature is decreasing: 4 seconds (The minimum time for changing one display unit) • When display temperature is increasing: 1 minute
Display after battery connection	• Undefined (The value is within the display range.)

AVG SPEED

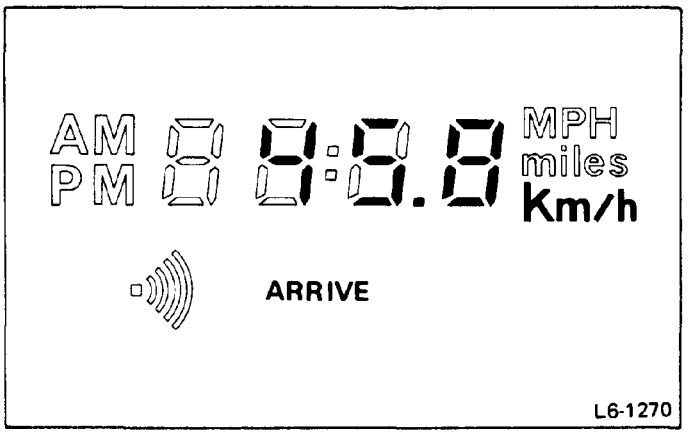

Fig. 36

Display	• The AVG (SPEED) is displayed by four digits of the 7-segment figures. • While this is being displayed, the AVG SPEED button on the control unit is illuminated. "0" as a high-order digit is indicated as a blank.
Display range	<table><tr><th></th><th>Unit</th><th>Display range</th><th>Discrimination</th></tr><tr><td>mile</td><td>MPH</td><td>0.0 – 150.0</td><td>0.1 MPH</td></tr><tr><td>km</td><td>km/h</td><td>0.0 – 240.0</td><td>0.1 km/h</td></tr></table>
Display update time	• 4.8 sec
Function	• The average speed is displayed when the AVG SPEED button is depressed. • The displayed contents are travelled distance/travelled time, and the distance and time travelled after resetting the average car speed are used.
Display at overflow	• If the travelled time exceeds 100 hours, or the travelled distance exceeds 1000.0 display unit [that is, 1000.0 km (625 mile), the previously displayed contents are displayed. In this case, "km/h" or "MPH" display flashes.
Display immediately after resetting	• If (AVG SPEED) function is selected directly after connecting the battery, or directly after resetting, bars are displayed for 4.8 seconds, that is - - - km/h (MPH).

Self-diagnosis

The hatched position and black-colored portion flash alternately, in addition to the display of the 7-segment figures.

L6-1273

Fig. 37

Self-diagnosis	• The self-diagnosis function is attained when the CLOCK, ALARM and ARRIVE buttons are depressed at the same time. • In this function, all seven-segments light up for three seconds, then each digit changes from 9 to 8 to 7, . . . , 2 to 1 to 0 for 0.5 second each. During this period, ["AM", "))) ", " : ", "Miles" "(km)"] and ["PM", "ARRIVE", ".", "MPH", "(/h)"] flash alternately. • During this function, the buzzer sounds intermittently for a period of 0.5 second in synchronization with the change of the displayed figure.
Return to function after self-diagnosis	• The self-diagnosis function is cancelled when one complete cycle has ended, or when another function button is depressed. Upon completion of the self-diagnosis cycle, display returns to the CLOCK function.
Self-diagnosing of LED (pilot lamp) on control unit	• The lamps are illuminated in the sequence of CLOCK, ALARM, OUT TEMP, TRIP, ARRIVE, AVG SPEED in synchronization with the change in the displayed figure. Each lamp illuminates for 0.5 seconds period. 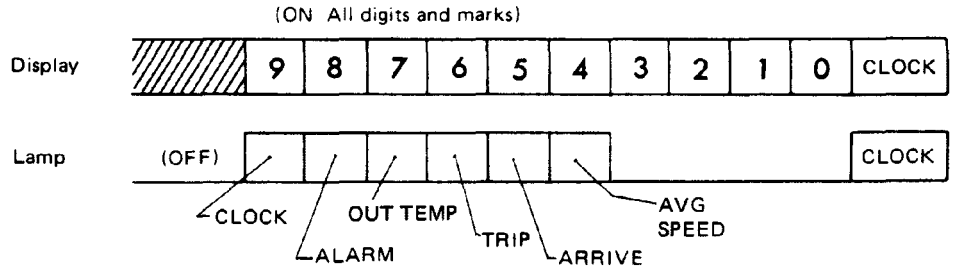

In addition to the above, the following functions are also provided:

Display when ignition switch is turned to ON	• When the ignition switch is turned to ON, the function selected when the ignition switch was turned to OFF is displayed again.
Multiple function input	• If two or more function inputs are made, except in the self-diagnosis, the function which is input first is displayed. The next input is accepted only after all functions are turned to OFF once.

ALARM at ignition switch OFF	• If the preset alarm time is reached while the ignition switch is OFF and the ignition switch is turned to ON within 20 seconds after the alarm time, the buzzer sounds and the sign " •))) " flashes till the 20-second period terminates. 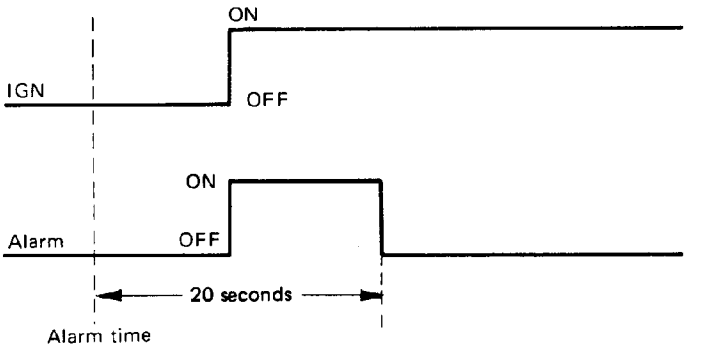
Operation of function button	• When any of the function buttons are depressed, the buzzer sounds for 0.05 seconds, indicating that the signal has been accepted.
Operation of "RESET" switch	• If the "RESET" switch is kept ON for 1.2 second, the buzzer sounds for 0.05 seconds.

REMOVAL AND INSTALLATION

1) Control & display unit
   (1) Pry out the cover beside the unit and remove screw in the opening.
   (2) Using screwdriver, slightly pry the unit up, being careful not to damage instrument panel.

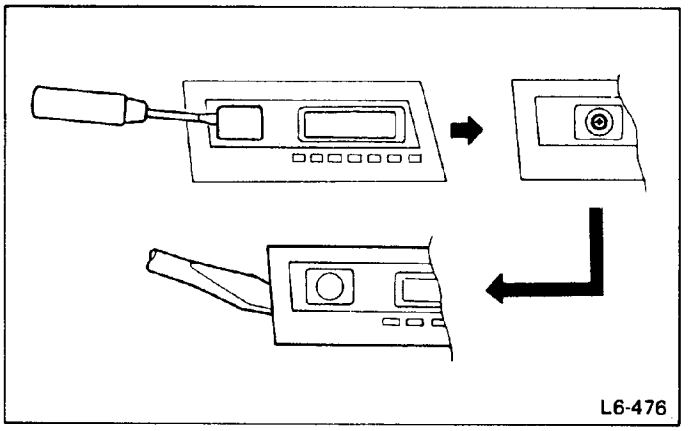

Fig. 38

(3) Disconnect the connector and take out the unit.
(4) To replace bulbs, remove five screws on the back side case.

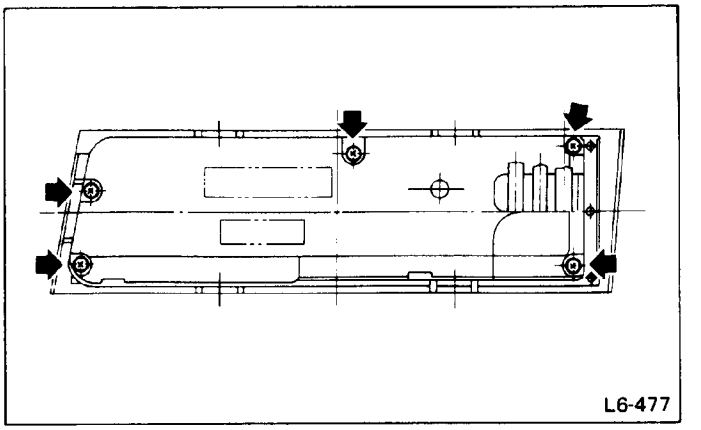

Fig. 39

(5) Installation is in the reverse order of removal.

2) Circuit unit

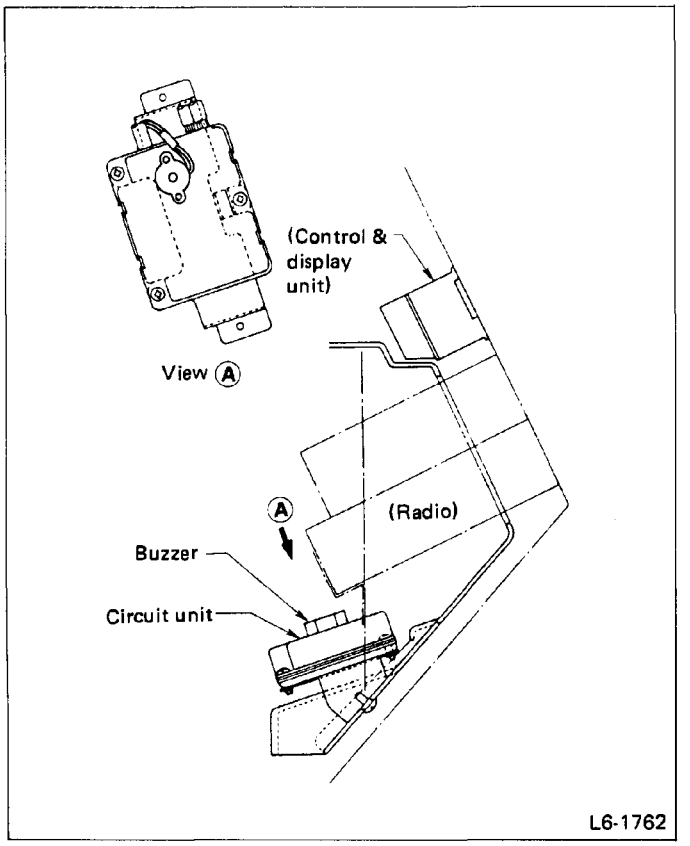

Fig. 40

(1) Detach control & display unit.
(2) Remove radio fixing screws through the opening and take out radio.
(3) Through the opening to be installed the radio, remove three screws and detach the circuit unit from the bracket.
(4) Installation is in the reverse order of removal.

Ignition Switch

Ignition switch is installed on steering column and steering lock mechanism is provided.
Key plate can be pulled out of ignition switch only in "LOCK" position.

CONNECTION

Connection of ignition switch terminals is shown in the following table.

Make sure to securely connect electric connector to ignition switch.

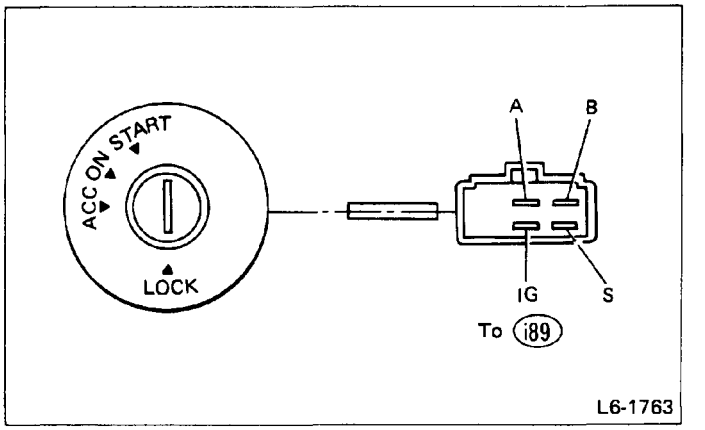

Fig. 41

Connector	Switch operation			
Terminal	LOCK	ACC	ON	START
B		○	○	○
A		○	○	
IG			○	○
S				○

Combination Switch

Combination switch is fitted on steering column and is combined with headlight dimmer switch, turn-signal switch, hazard warning light switch, parking light switch, and wiper & washer switch. Transistorized turn & hazard unit is incorporated in combination switch. Turn signal lever has clicks for lane changing.

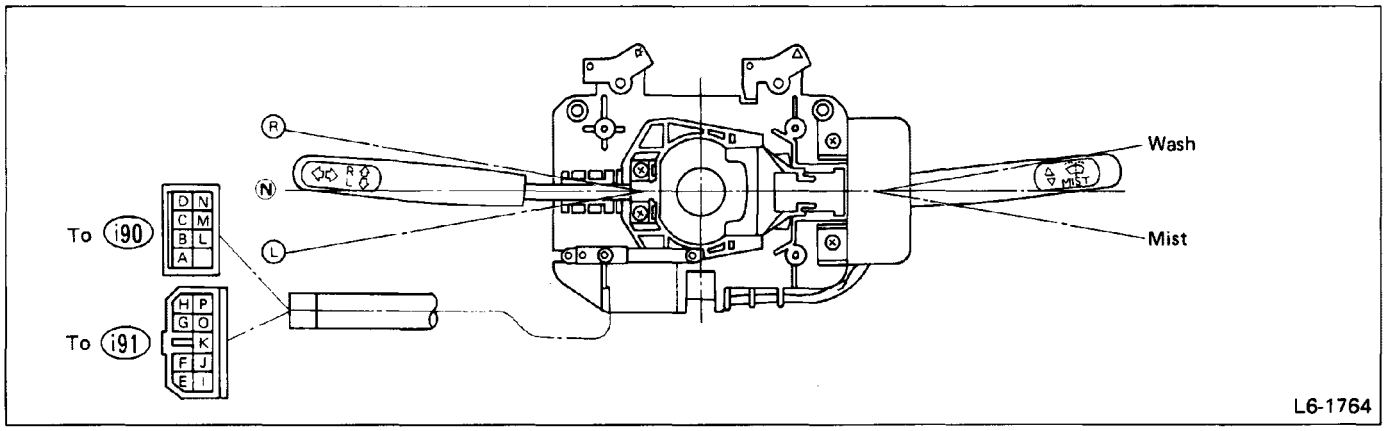

Fig. 42

CONNECTION

Connection of each terminal is shown in the following table.

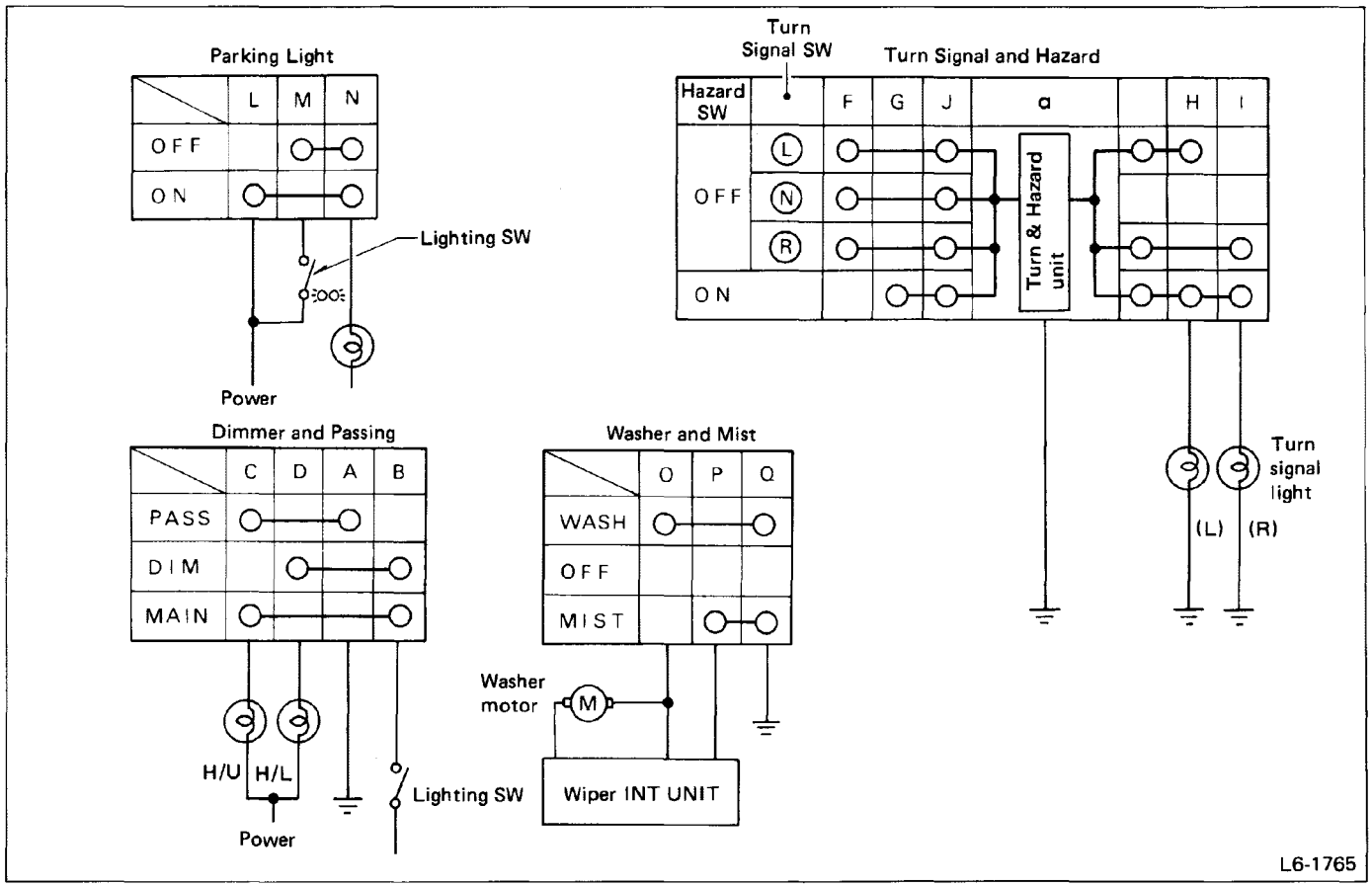

Fig. 43

REMOVAL AND INSTALLATION

1) Remove screws and detach lower cover.
2) Remove fixing screws and detach column covers (upper and lower).
3) Take out steering wheel cover and remove nut using Special Tool. Then, detach steering wheel.
4) Detach clip and band fitting harness to steering column, and disconnect the connectors.
5) Remove screws fixing combination switch to control wing bracket, and take out combination switch.
6) Installation is in reverse order of removal.

Control Wing

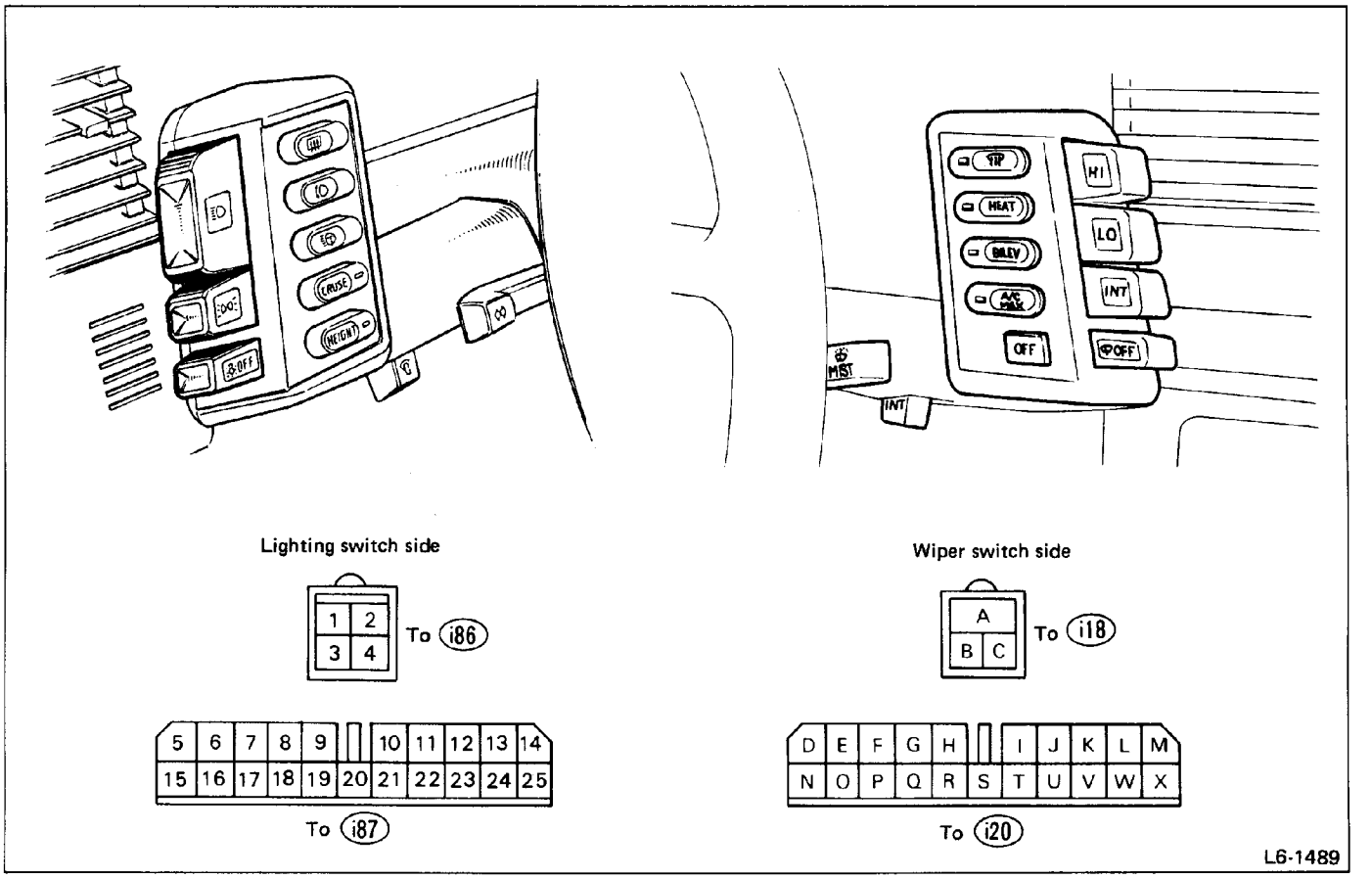

Fig. 44

Lighting switch

Connector		Switch operation			Connection
Terminal	Color	OFF	≡D◐≡	≡D	
1	RL		○	○	Power source
2	R		○	○	Combination meter and Combination switch
9	YW	○	○		
10	YW	○	○		
7	YR	○	○		Timer
3	YB			○	Headlight beam switch and Retractable headlight switch
4	B	○	○	○	Grounding
		Illumination control unit			⏚
8	RB	○	○	○	Combination meter

Wiper and washer switch

Connector		Switch operation				Connection
Terminal	Color	OFF	INT	LO	HO	
D	LW				○	Wiper motor
E	G		○	○		Wiper INT unit
F	Y	○	○			Wiper INT unit and wiper motor
G	YL	○				Wiper motor
H	R			○	○	Ignition switch (ACC)
I	RB	○				Wiper INT unit
J	YB		○			Wiper INT unit
K	B	○	○			Grounding
M	BW					Resistor
N	BY					

Heater & Ventilator Control

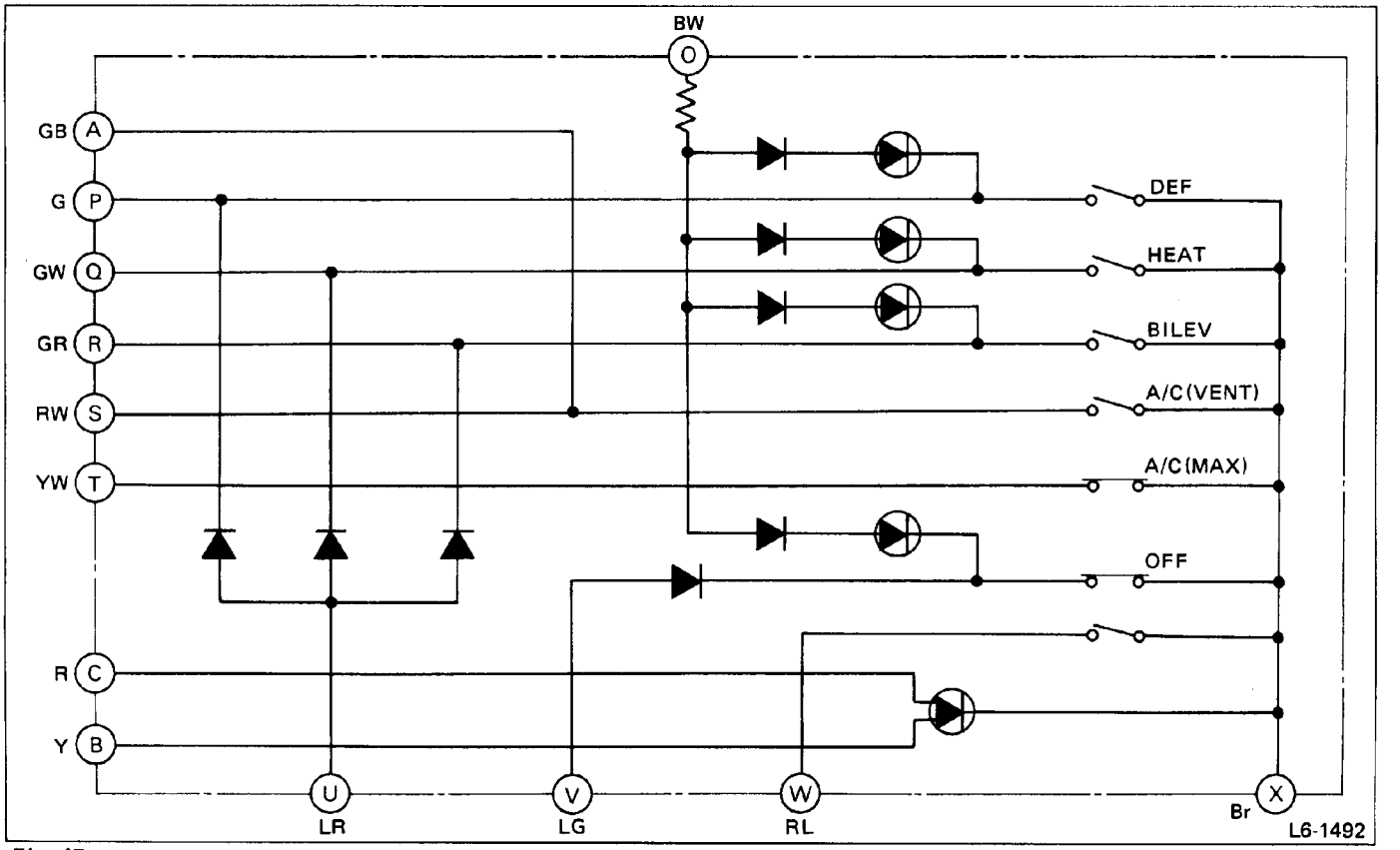

Fig. 45

SUB SWITCH

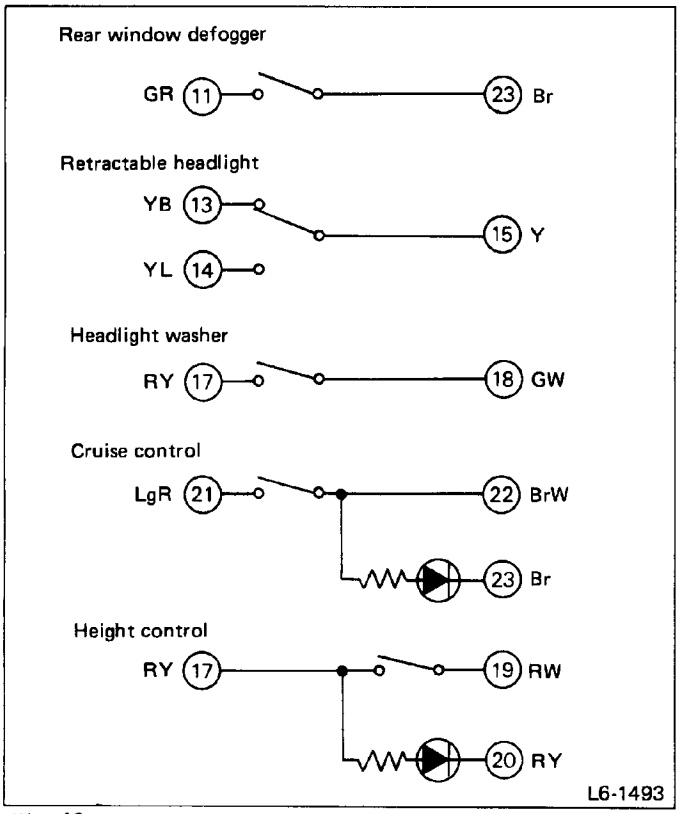

Fig. 46

REMOVAL AND INSTALLATION

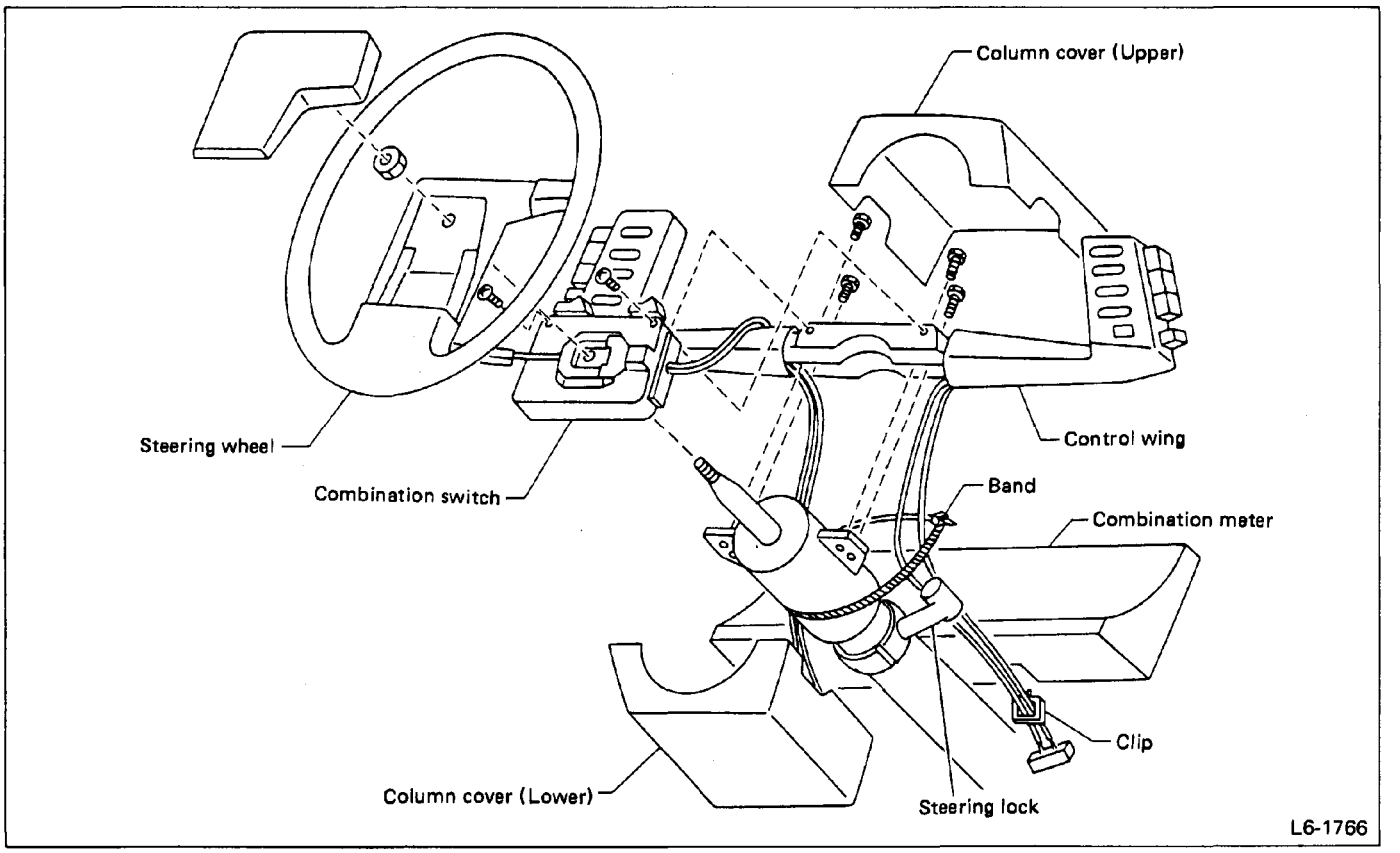

Fig. 47

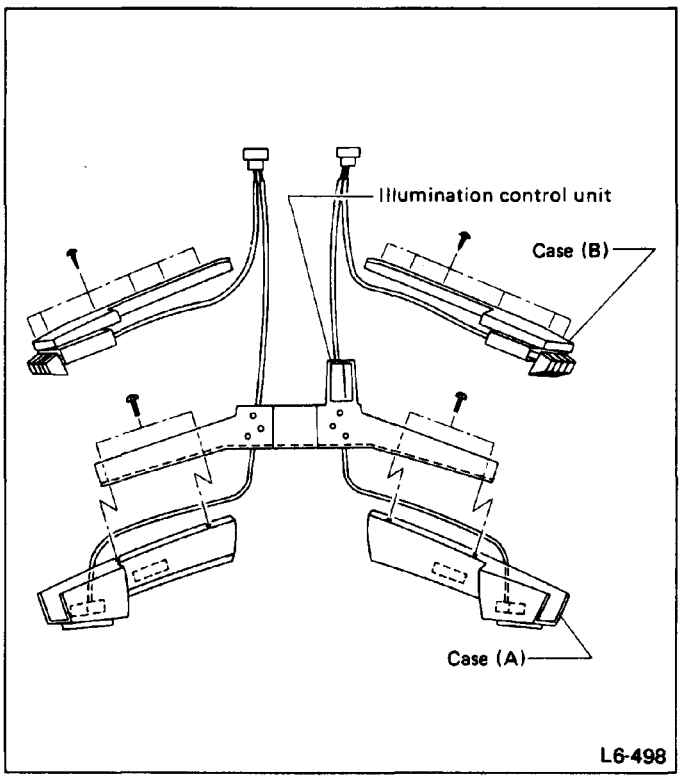

Fig. 48

1) Remove screws and detach lower cover.
2) Remove fixing screws and detach column covers (upper and lower).
3) Take out steering wheel cover and steering wheel.
4) Detach clip and band fitting harness to steering column.
5) Remove screws and take out combination switch.
6) Remove fixing bolts and detach control wing.
7) Remove screws and separate case A and case B from control wing.
8) Installation is in the reverse order of removal.

a. To remove switch knob, lightly push pawl inside it using a pin and pull the knob out.

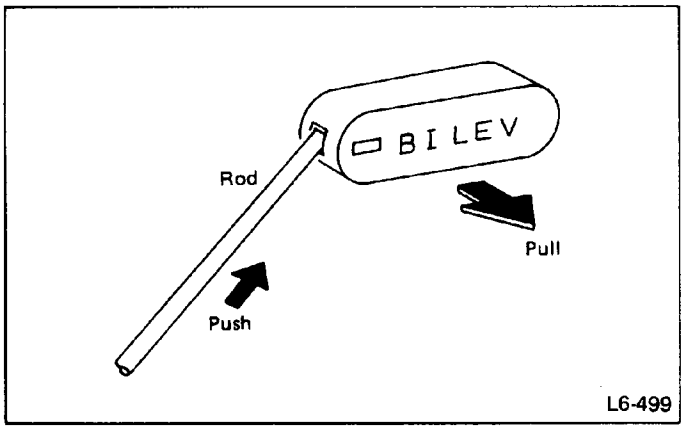

Fig. 49

b. When installing sliding switch knob and volume control, place your finger on the rear surface of the control and mesh the knob with the control.

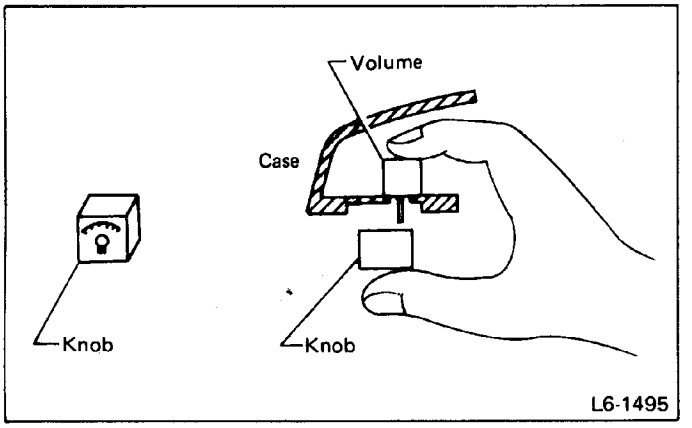

Fig. 50

c. Do not allow harness to be caught in cases A and B or pulled unnecessarily during ASSY.

Retractable Headlight

The retractable headlights are operated (opened or closed) by the retractable headlight switch, lighting switch or flasher switch.

An indicator light in the combination meter illuminates for approximately one second to indicate that current is flowing through the headlight motor during open-close operation.

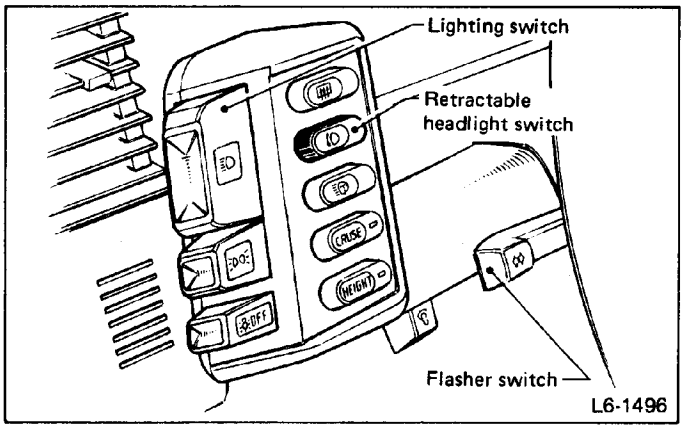

Fig. 51

a. If the headlights fail to retract or open, take emergency action as follows:

(1) Open hood and disconnect connector from retractable headlight motor.

(2) Remove rubber cover from top of the motor.

(3) Turn manual control knob on top of the motor until the headlights are open completely.

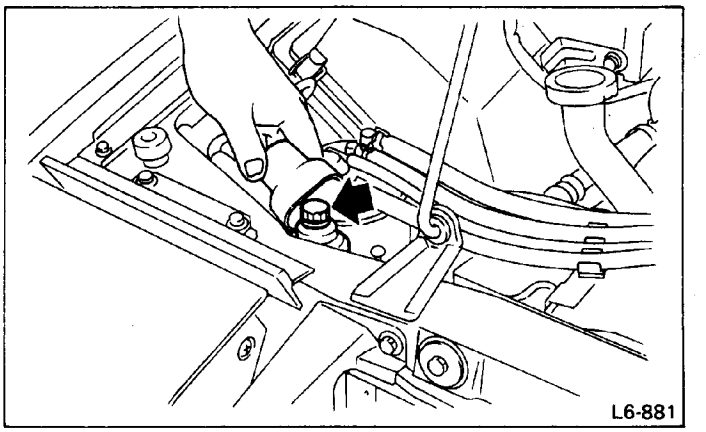

Fig. 52

(4) Install the rubber cover as before.

b. If foreign matter hampers movement of the headlights, immediately repeat steps (1) through (3) in a. above, and remove foreign matter.

Otherwise, current will continue to flow through the circuit, resulting in a rundown battery. Whether or not current is flowing through the circuit can be determined by the indicator light in the combination meter.

REMOVAL AND INSTALLATION

1) Disconnect electric connectors for retractable headlight and motor.
2). Detach plastic cover.
3) Remove screws and take out lid.

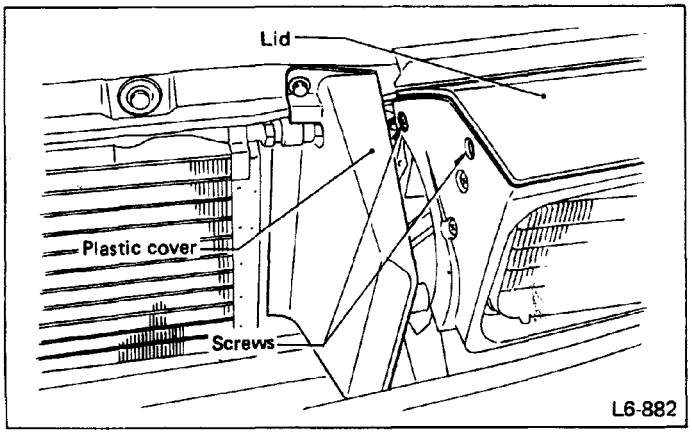

Fig. 53

4) Remove screws and take out headlight cover.

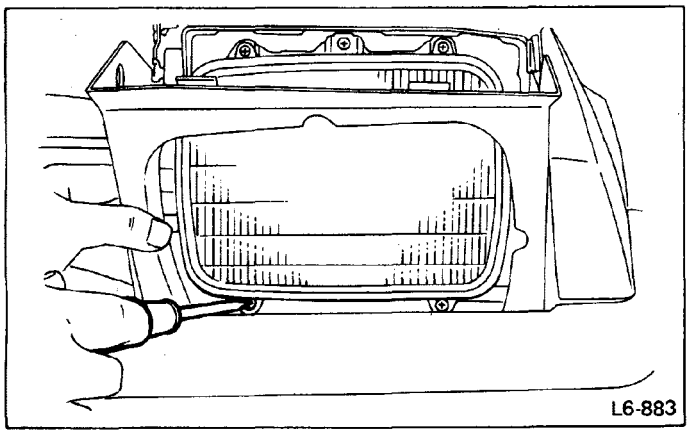

Fig. 54

5) Remove fixing bolts and take out retractable headlight ASSY.

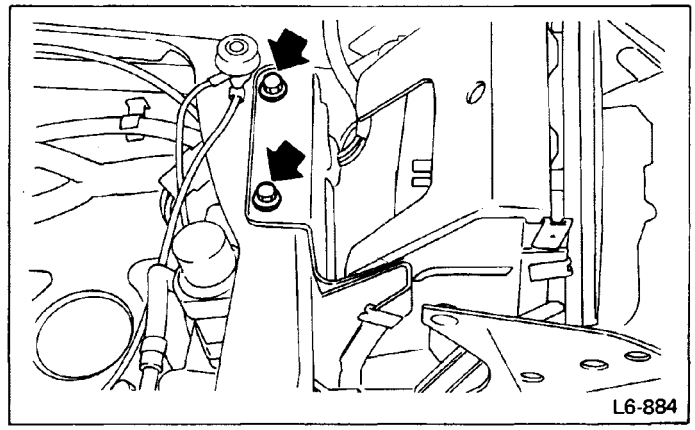

Fig. 55

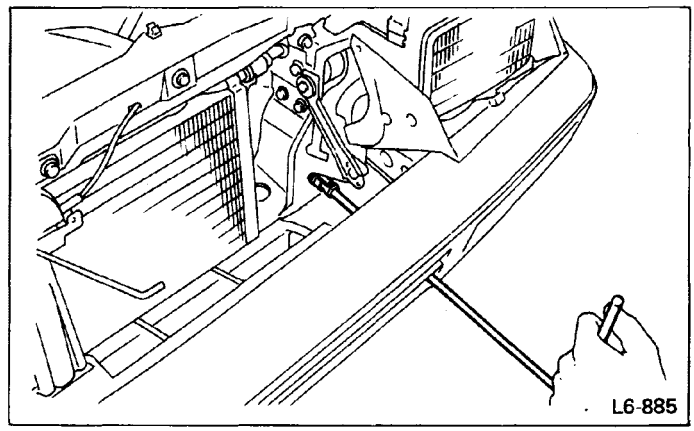

Fig. 56

6) Remove fixing bolts and separate motor from retractable headlight ASSY.

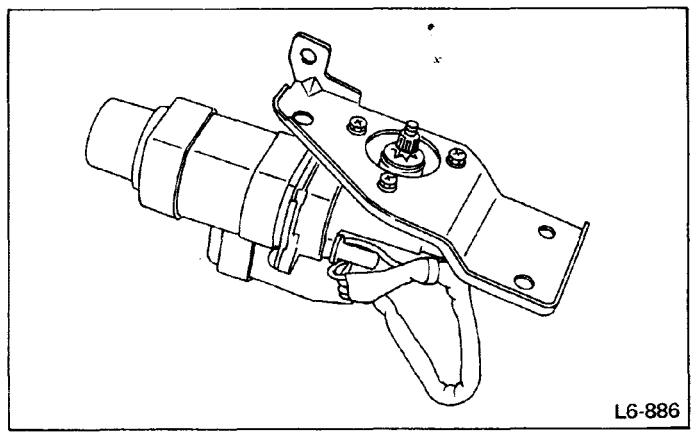

Fig. 57

INSTALLATION

Install each part in the reverse order of removal with the following cautions:
1) Tighten bolts and screws to the specifications.

Tightening torque:
Motor fixing bolts
13 – 23 N·m (1.3 – 2.3 kg-m, 9 – 17 ft-lb)
Headlight cover fixing screws
3 – 6 N·m (0.3 – 0.6 kg-m, 2.2 – 4.3 ft-lb)

2) Install retractable headlights so that the clearance between lid, hood and fender is within the range indicated in the following figure.

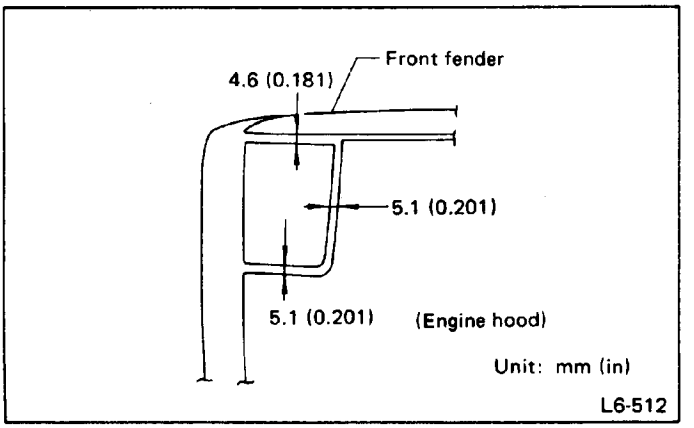

Fig. 58

3) After adjusting the headlights, recheck them for proper movement.

Wiper and Washer

ON-CAR SERVICES

ADJUSTMENT

1) When wiper switch is in "OFF" position, adjust blades in original position as shown in illustration by changing wiper arm installation.

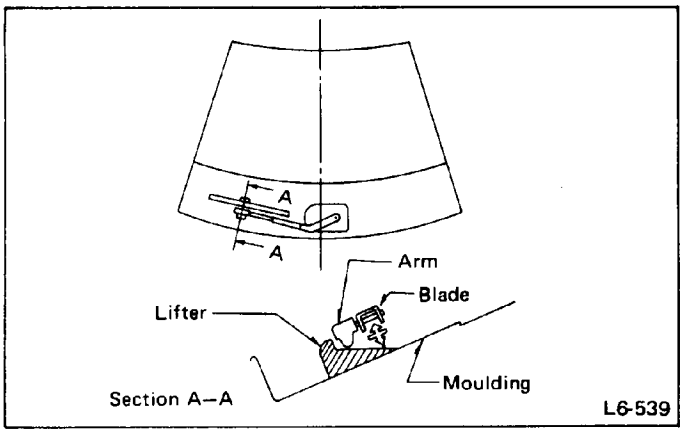

Fig. 59

2) Adjust washer ejecting point on windshield glass as shown in illustration when car stops.

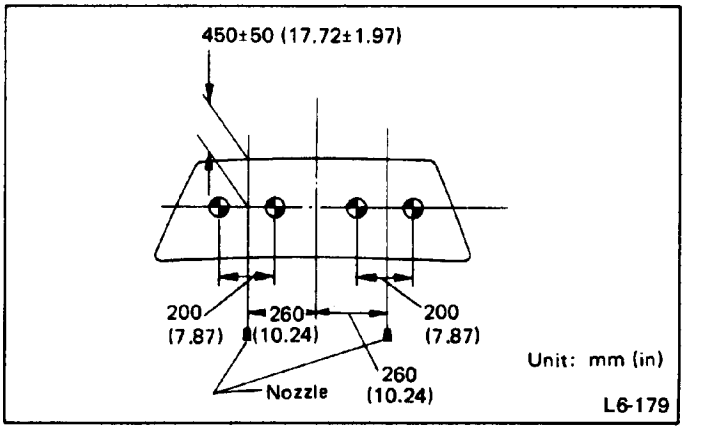

Fig. 60

REMOVAL

BLADE

Remove attaching screws and separate blade from wiper arm.

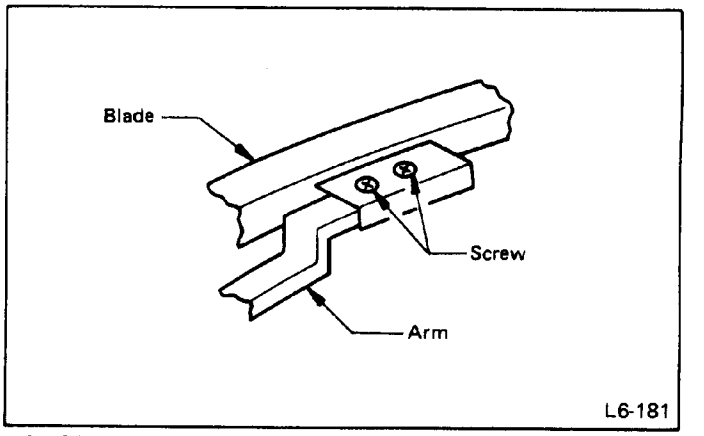

Fig. 61

ARM

With front hood opened, remove nut and take out wiper arm and arm cover.

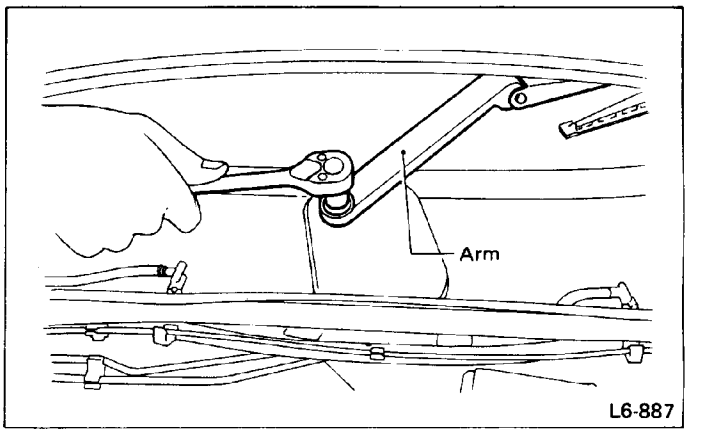

Fig. 62

WIPER MOTOR ASSEMBLY

1) Detach plugs fitting moulding.
2) Disconnect electric connector.
3) Remove fixing bolts and detach wiper motor ASSY.

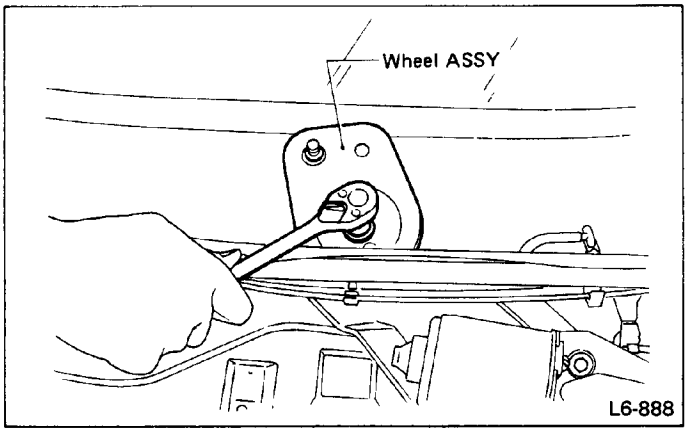

Fig. 63

4) Remove bolts and nut, and separate wheel ASSY from wiper motor ASSY.

WASHER TANK

1) With front right-hand side mud guard and air cleaner detached, disconnect electric connector and washer hose.
2) Remove nuts in engine room, and take out washer tank along with washer pump.

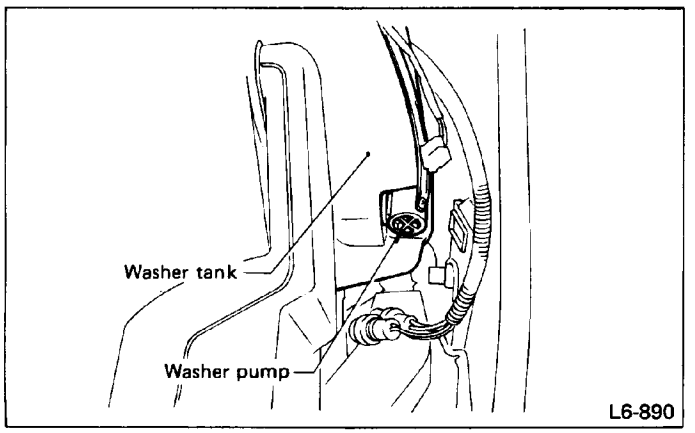

Fig. 64

NOZZLE

1) Detach front lower moulding and net.
2) Disconnect washer hose and pull out nozzle.

INSTALLATION

Install each part in the reverse order of removal with the following cautions:

1) Tighten bolts and nuts to the specifications.

Tightening torque:
Wheel ASSY attaching bolts
6.4 – 9.3 N·m (0.65 – 0.95 kg-m, 4.7 – 6.9 ft-lb)
Wiper motor to wheel ASSY attaching nut
22 – 29 N·m (2.2 – 3.0 kg-m, 16 – 22 ft-lb)
Wiper motor ASSY fixing bolts
4.4 – 7.4 N·m (0.45 – 0.75 kg-m, 3.3 – 5.4 ft-lb)
Wiper arm fixing bolts
10 – 18 N·m (1.0 – 1.8 kg-m, 7 – 13 ft-lb)
Washer tank attaching nuts
3 – 6 N·m (0.3 – 0.6 kg-m, 2.2 – 4.3 ft-lb)

2) After installation, make sure that the wiper and washer are operated in the normal condition.

Wiper Intermittent Control System

A microcomputer is used in the windshield wiper intermittent control circuit to provide a car-speed-sensing function.
The higher the car speed, the more rain on the windshield. When the wiper switch is set to the INT position, the control circuit automatically changes the time interval preset by the intermittent control switch in response to car speed. In other words, when the switch is in the INT position, the wiper operates for one cycle and then stops. If speed increases to 20 km/h (12 MPH) before the next wiper cycle (during the resting time), the wiper will complete another cycle during that time.

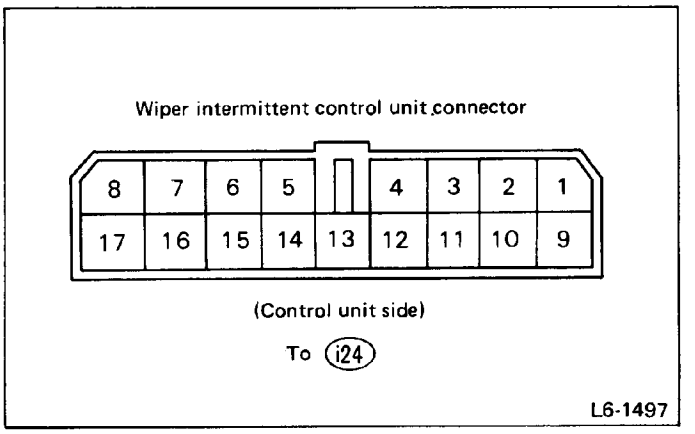

Fig. 65

CONNECTION

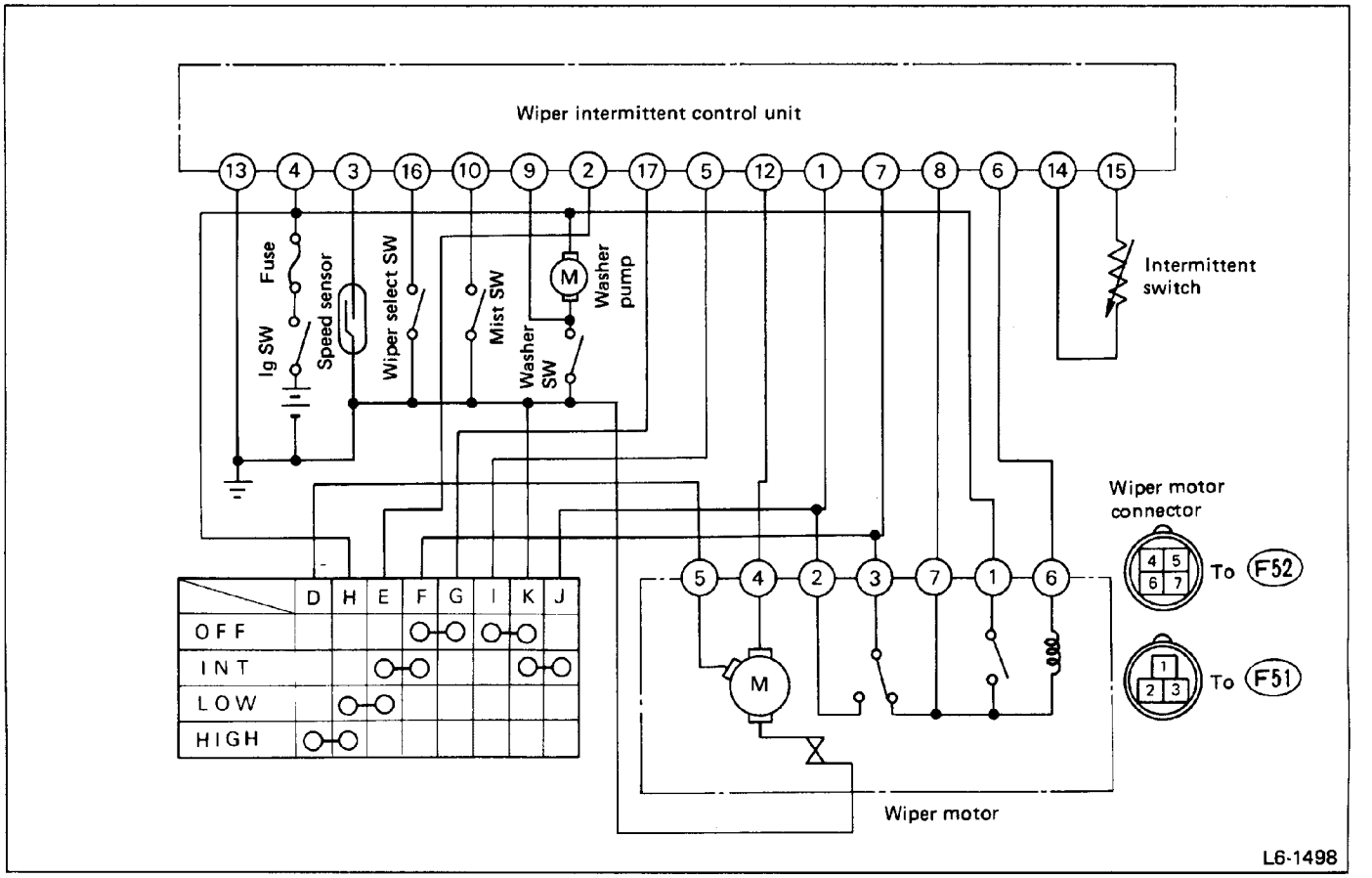

Fig. 66

Radio

REMOVAL AND INSTALLATION

RADIO BODY

1) Take off floor mat of driver's side and draw out feeder cord connectors from left side of center under portion of instrument panel.

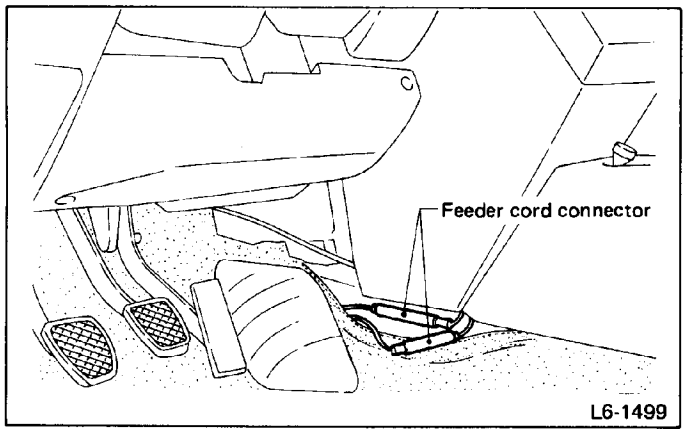

Fig. 67

2) Disconnect feeder cord connectors.
3) Take out clock.
4) Remove fitting screws, and slightly pull out radio along with bracket.
5) Disconnect electric connectors from the back side of radio, and take out radio along with antenna feeder cord and bracket.
6) Remove screws and separate bracket from radio.
7) Installation is in the reverse order of removal.

ADJUSTMENT

1) Setting push button.

- Other than ETR (Electronic tuning radio)

There are five push buttons, so five stations are selected as follows.

(1) Select a station by turning the turning dial.
(2) Pull the push button and push it back, and then the push button is kept set at the station required.

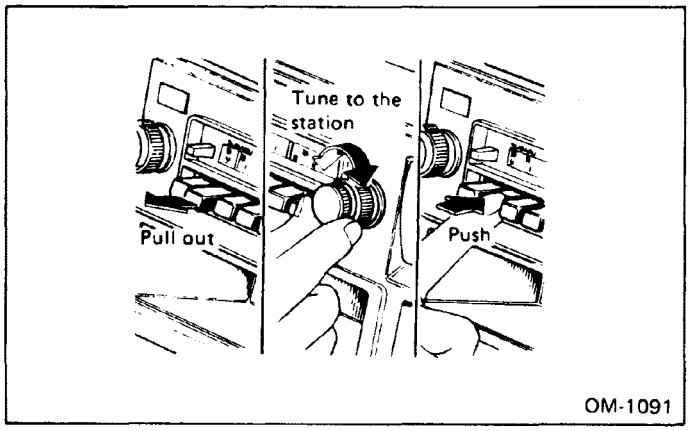

Fig. 68

a. Confirm the push button is set at the center of the channel, otherwise the tone becomes bad according to an amount of discrepancy from the center of the channel.
b. For FM/AM radio, push the FM push button once before selecting FM station.

- ETR

There are five pre-set buttons, so five stations each on AM and FM can be selected as follows.

(1) Push the AM/FM selector switch to select the required band.
(2) Push the manual or automatic tuner until the frequency of the desired station appears on the digital indicator panel.
(3) Push the memory button. "M" appears on the panel for five seconds.
Push one of the pre-set buttons while "M" appears on the panel. The frequency on the panel is then pre-set for that button.

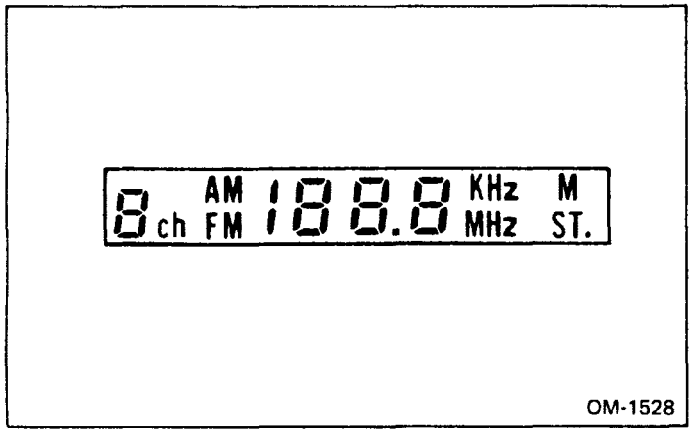

Fig. 69

- ETR with auto-reverse cassette player

There are five pre-set buttons, so five stations each on AM and FM can be selected as follows.

(1) Push the AM/FM selector switch to select the required band.
(2) Push the manual or automatic tuner until the frequency of the desired station appears on the digital indicator panel.
(3) When desired preset button is pressed for more than two seconds, the station now being received is memorized.

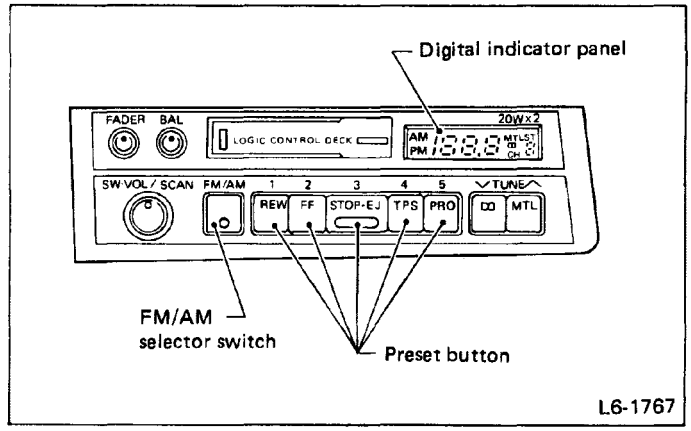

Fig. 70

2) Adjusting antenna trimmer (except ETR)

Antenna trimmer is adjusted in order to make each radio sensitive in case the sensitivity is poor or abnormal noise exists (AM band only).

(1) Attach antenna rod in position.
(2) Select the channel of a weak station between 1,400 kHz and 1,600 kHz.
(3) Adjust antenna trimmer to make the sensitivity in maximum.

Antenna trimming is available only for AM band.

3) Prevention of abnormal noise

(1) Ignition system contacts, the alternator and motor brush contact points are sources of abnormal noise in the radio. In order to prevent this noise, the vehicle is equipped with a high tension cord which contains resistance, a condenser in the ignition coil harness and a grounding wire to the body from the engine.
(2) Antenna is grounded to body through antenna installing bolts, when screws are not tightened securely, it makes abnormal noise. So, tighten antenna installing bolts securely.

Antenna

REMOVAL

1) Remove antenna mounting nut and supporter.
2) Remove two bolts which secure antenna to trunk. Extract antenna and remove band clip.
3) Disconnect feeder socket and harness connector.
4) Remove drain tube from grommet.

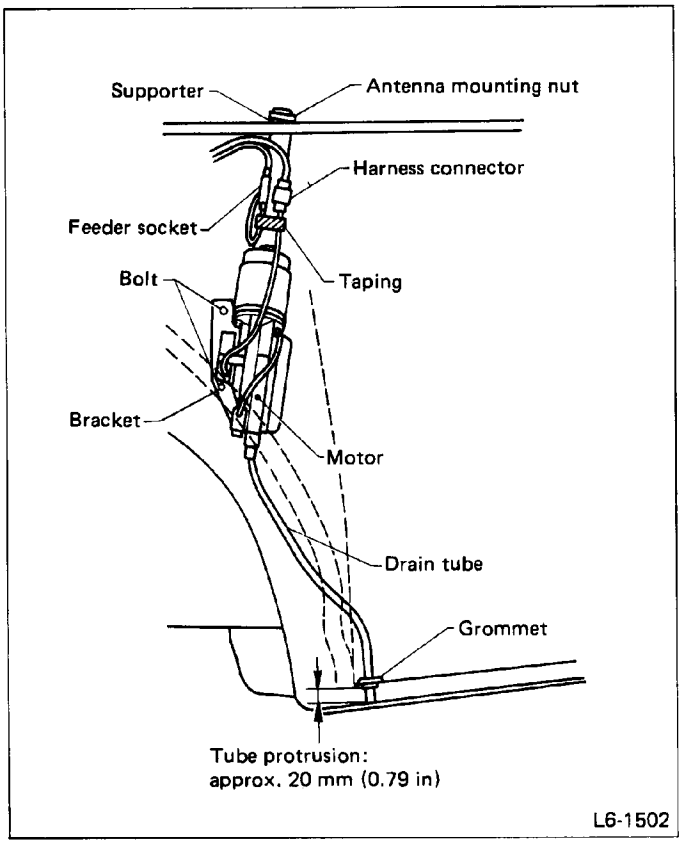

Fig. 71

INSTALLATION

1) Connect feeder socket and harness connector.
2) Pass antenna rod through mounting hole. Temporarily tighten antenna bracket with two bolts. Install supporter and tighten antenna mounting nut.
3) Tighten two bolts to secure antenna bracket.
4) Pass drain tube through grommet. Be sure tube protrudes approximately 20 mm (0.79 in).

REPLACEMENT

ANTENNA ROD

Removing antenna rod

1) Loosen antenna mounting nut enough so that it can be removed with your fingers.
2) Turn radio power switch ON and extend antenna. Remove antenna mounting nut.
3) Hold the lower section of antenna rod by hand and lift antenna rod vertically. Extract inner pipe and rope from antenna housing.

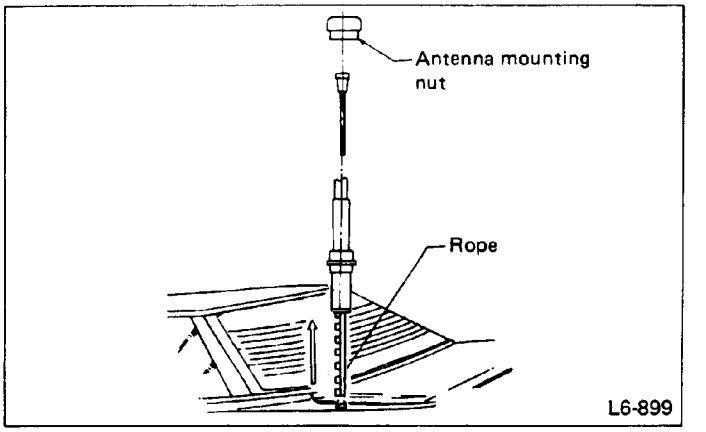

Fig. 72

Installing antenna rod

1) Insert centering pipe (furnished with an antenna rod of genuine parts) into antenna housing until it bottoms.

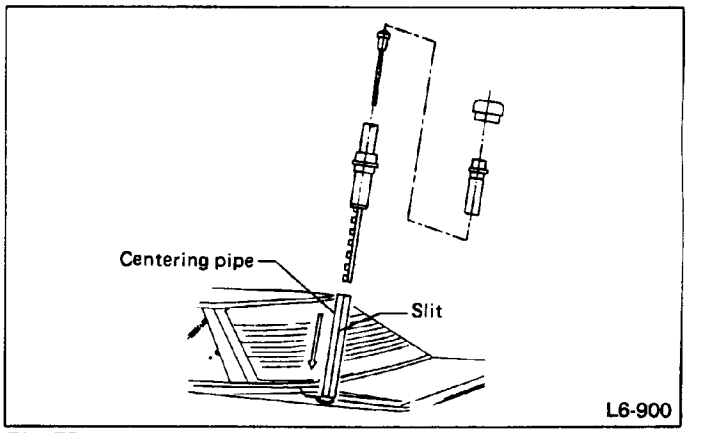

Fig. 73

2) Insert antenna rod rope into antenna housing via centering pipe with its rack facing outward; at the same time, turn radio power switch OFF.

Be sure antenna rod is vertical to antenna housing. This prevents rack from sustaining damage and makes it easy to insert rope.

3) Remove centering pipe from antenna housing and detach it from rope.

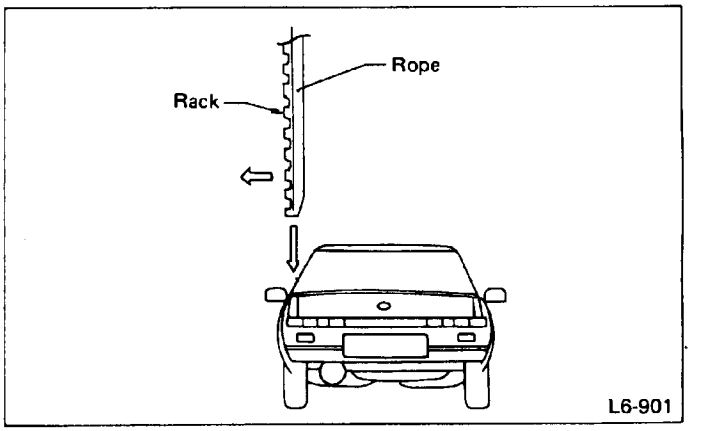

Fig. 74

4) Face inner pipe spring toward the center of car and insert inner pipe into antenna housing.
5) Temporarily tighten antenna mounting nut.
6) Turn radio switch ON and OFF to ensure antenna rod extends and retracts properly.
7) Tighten to secure antenna mounting nut.

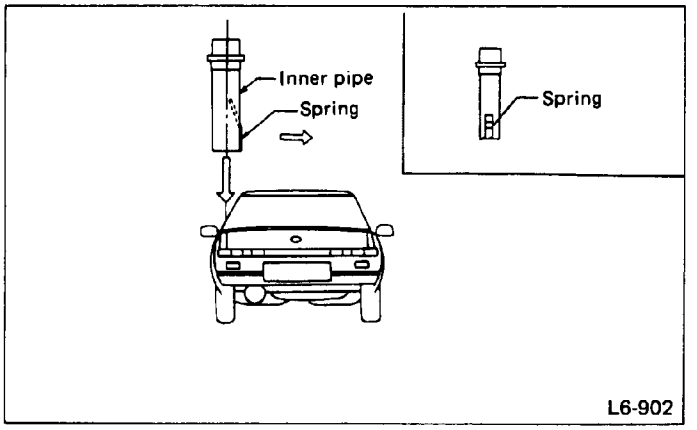

Fig. 75

Digital Clock

REMOVAL AND INSTALLATION

1) Pry out the cover beside the clock display and remove screw in the opening.
2) Using screwdriver, slightly pry the clock up, being careful not to damage instrument panel.

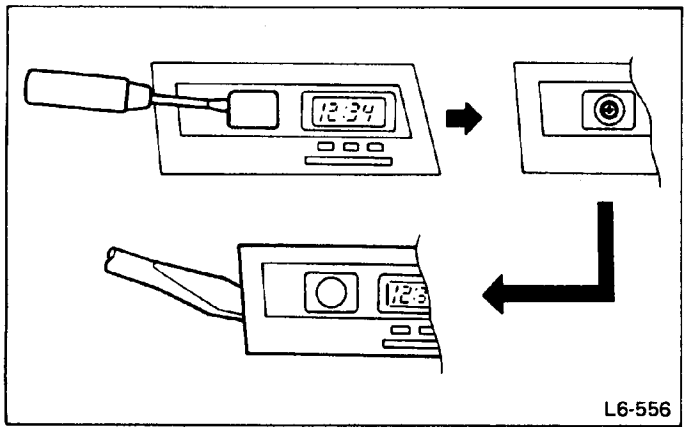

Fig. 76

3) Disconnect the connector and take out the clock.
4) Installation is in the reverse order of removal.

Horn

All models are equipped with double horns which consists of high tone and low tone horns.

Horn switch is incorporated in steering wheel. When horn button is pushed down to actuate horn switch regardless of any position of ignition-starter switch, horn make a sound.

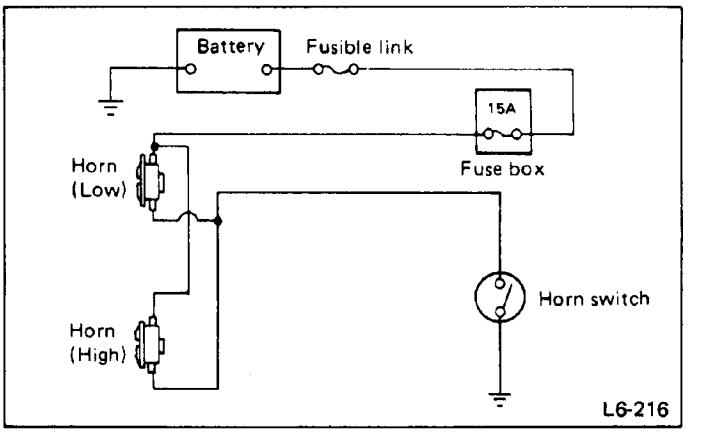

Fig. 77

For removal of high or low tone horn, disconnect electric connector with front bumper removed and take out horn by removing bolt.
For installation, follow the removal procedure in reverse order.

After installing horn, connect electric wire with it by keeping some slack to prevent wire from disconnecting by its vibration.

Rear Window Defogger

Rear window defogger is actuated when rear window defogger switch is turned to "ON" with ignition switch "ON". Indicator light glows when operating rear window defogger.

INSPECTION

1) Start engine, and turn rear defogger switch on.
2) Check each heat wire at its center position for discontinuity by setting direct-current voltmeter.

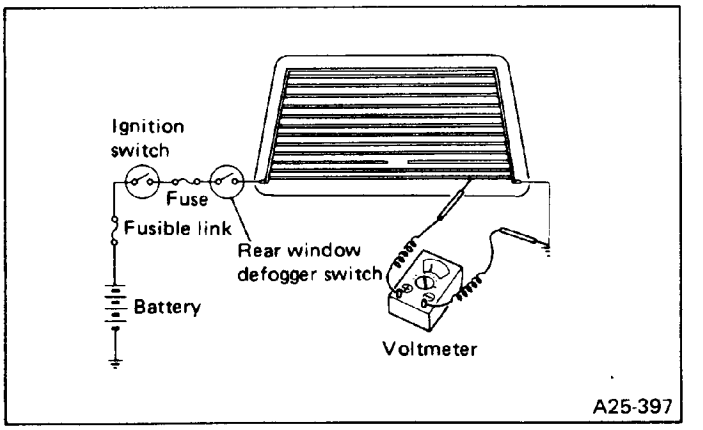

Fig. 78

3) If meter indicates 12 volts or 0 on specific wire that line is broken. Normal indication is about 6 volts.
4) For finding out broken position in the line, move positive lead of voltmeter along the line until abrupt variation in the meter indication is encountered.

REPAIR

1) Clean broken wire and its surrounding area.
2) Cut off slit on (used) thin film by 0.5 mm (0.020 in) width and 10 mm (0.39 in) length.
3) Place the slit on glass along the broken wire, and deposit conductive silver composition (DUPONT No. 4817) on the broken portion.

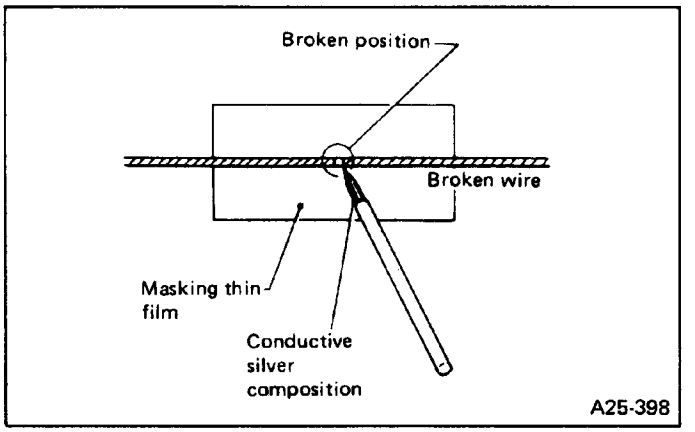

Fig. 79

4) Dry out the deposited portion.
5) Inspect the repaired wire for continuity.

Cruise Control

The cruise control automatically controls car speed and allows the car to run at a constant speed without depressing the accelerator pedal. In operation, when the driver sets a desired speed with the cruise control switch, the built-in micro-computer compares the speed set in the memory with the actual running speed detected by feedback signals from the speedometer. This feedback system operates the throttle to correct the speed difference, thereby keeping the car at a constant speed.
The major components are as follows:

- Main switch . . . . . built in LH control wing
- Cruise switch . . . . mounted on steering wheel
- Control unit . . . . inside the instrument panel, above glove box (One end is inserted into panel, and the other end is secured with screws.)
- Vacuum pump and Valve ASSY . . . . . mounted on RH strut in engine room
- Actuator . . . . . mounted on front bulkhead bracket in engine room
- Clutch switch . . . . mounted on pedal bracket
- Stop & brake switch . . . . . mounted on pedal bracket

a. The cruise control must never be used in the following driving conditions.
(1) When going up or coming down a steep slope
(2) On roads with poor traction, for example, snow-covered, icy, or gravel roads
(3) When a strong wind is blowing
(4) In congested traffic
(5) On a road with many curves
b. Modification of this device must never be attempted.
c. The main switch of the cruise control must always be turned off, except when in use.

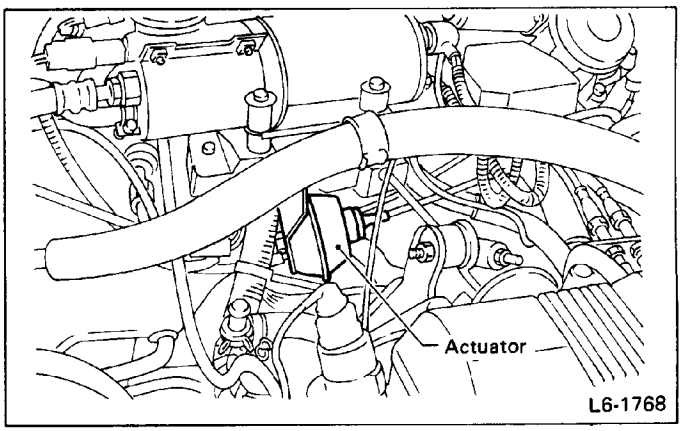

Fig. 80

ELECTRIC CIRCUIT

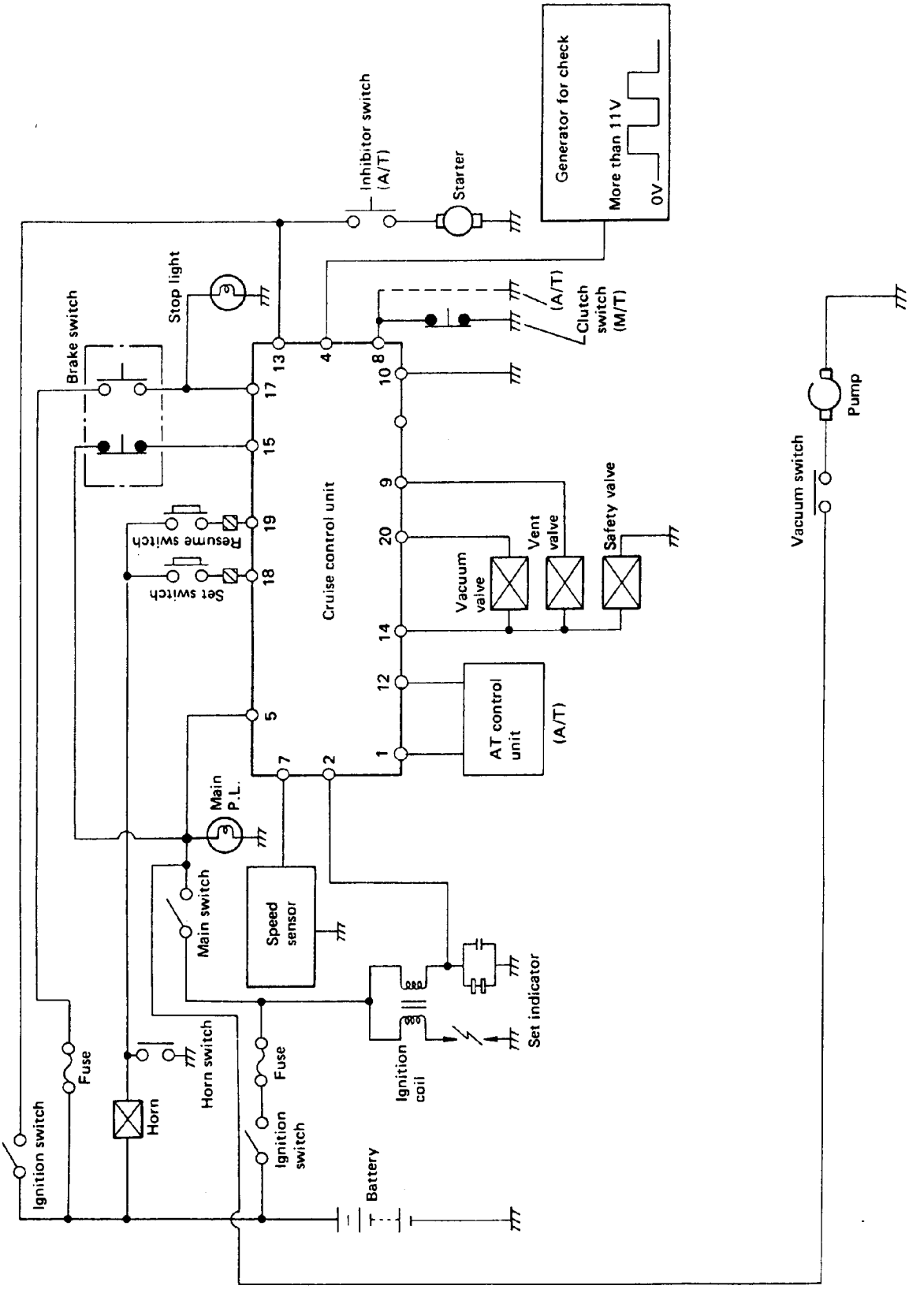

Fig. 81

L6-1769

DETAILS OF CONNECTOR TERMINALS

Cruise control unit connector (Body harness side)

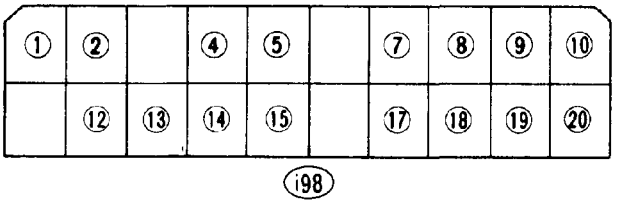

Terminal No.	Color code	Name	Description
①	LY	4th range set indicator (AT)	Voltage is 0V when set in the cruise control mode.
②	Y	Ignition coil (MT)	When the engine is rotating, the ignition pulse signal is outputted.
④	YL	Check	This terminal is used for checking quality in production line.
⑤	BrW	Main switch	If the main switch is turned ON when the ignition switch is ON, the battery voltage is outputted to this terminal. If the main switch is turned OFF, no voltage appears on this terminal.
⑦	YR	Speed sensor	If speedometer cable is rotated with ignition switch turned ON, the ON-OFF signal (more than 5V and 0V) is outputted repeatedly.
⑧	B(AT) GY (MT)	Clutch switch	Manual transmission model: This terminal is grounded unless clutch pedal is depressed. Automatic transmission model: This terminal is normally grounded.
⑨	WB	Vent valve	Signal is inputted to drive vent valve.
⑩	B	Ground	This terminal is normally grounded by the grounding wire of control unit.
⑫	LG	4th range cancel (AT)	Voltage is 0V when car speed is at least 5 km/h (3 MPH) below the speed set in the cruise control mode or when accelerating using the resume switch.
⑬	BW	Inhibitor switch (AT)	This terminal is grounded when selector lever is set to N or P. It is not grounded if set in any other position.
⑭	LW	Valve common	Battery voltage is outputted from the control unit and fed to each valve while the cruise control is operating.
⑮	BR	Brake switch	When the ignition switch is ON, the battery voltage is outputted. If brake pedal is depressed, no voltage is outputted.
⑰	GB	Stop switch	The battery voltage is outputted if the brake pedal is depressed. If the brake pedal is released, the voltage is 0V.
⑱	WR	Set switch	If the set button is depressed with the ignition switch not to ON, the battery voltage is outputted. If the switch is released, the voltage is 0V.
⑲	YB	Resume switch	If the resume switch is turned when the ignition switch is ON, the battery voltage is outputted. If the switch is returned, no voltage is outputted.

Terminal No.	Color code	Name	Description
⑳	G	Vacuum valve	The signal for activating the vacuum valve is inputted to this terminal.

* The signals from terminals ⑨, ⑭ and ⑳ are not outputted unless the cruise control unit is connected to the harness and actually operated.
(Adjust each terminal of the harness side connector of the cruise control unit according to the respective troubleshooting procedure.

CONTROL AND OPERATION

Speed set range and engagement operation	If the set switch is turned ON when the car speed is in the range of 40^{+0}_{-5} km/h to 250^{+0}_{-5} km/h (25^{+0}_{-3} MPH to 155^{+0}_{-3} MPH), the car speed is set, and automatically controlled. When the set switch is kept in the ON position, the set car speed is updated every 0.4 second.
Resume/accelleration operation	If the resume switch is set to ON within the set speed range, the car is accelerated up to the memorized speed, and then automatically controlled at that speed. If the resume switch is kept ON at a speed of over 40 km/h (25 MPH), acceleration is made until the maximum engine output is reached. If the resume switch is turned OFF after exceeding the set car speed, the car will continue at the speed at the moment the switch was turned OFF. If the resume switch is turned OFF without a set speed in memory, the entire system is turned OFF. Each time the set switch is pushed while the car is cruising, the set car speed is reduced by approximately 1.6 km (1 MPH).
Coasting operation	If the set switch is kept ON while the car is running at a constant speed, the car speed will decrease as long as the switch is ON. If the set switch is turned OFF within the set speed range, the car speed, at the time the switch is set to OFF, is memorized, and the car runs at this new set speed. Each time the resume switch is pushed while the car is cruising, the car speed set in memory increases by approximately 1.6 km (1 MPH).
Cancellation	The cruise control function is cancelled by the following operations, or during the following conditions. *(a) When the main switch is set to OFF position. *(b) When the ignition switch is set to ACC or OFF position. (c) When either the brake switch, stop switch, clutch switch, or inhibitor switch is operated. *(d) When the engine speed exceeds 6,000 ± 150 rpm. (e) When the car speed is below 30 km/h (19 MPH). *(f) When the car speed input change per second is greater than ±25 km/h (±16 MPH). *(g) When both the resume switch and set switch are depressed at the same time. The operation indicated by the asterisk mark "*" causes the set speed to be erased.

Cruise control unit compares the actual car speed detected by feedback signals from speed sensor incorporated in speedometer with the speed set in the memory memorized when set switch was turned on. A signal is then transmitted according to the difference between the two speeds.

This signal is transmitted to solenoid valves of valve ASSY located in engine compartment. The movement of actuator operates throttle valve through accelerator pedal and cable, thereby keeping the car speed constant.

CONSTRUCTION OF VACUUM SYSTEM

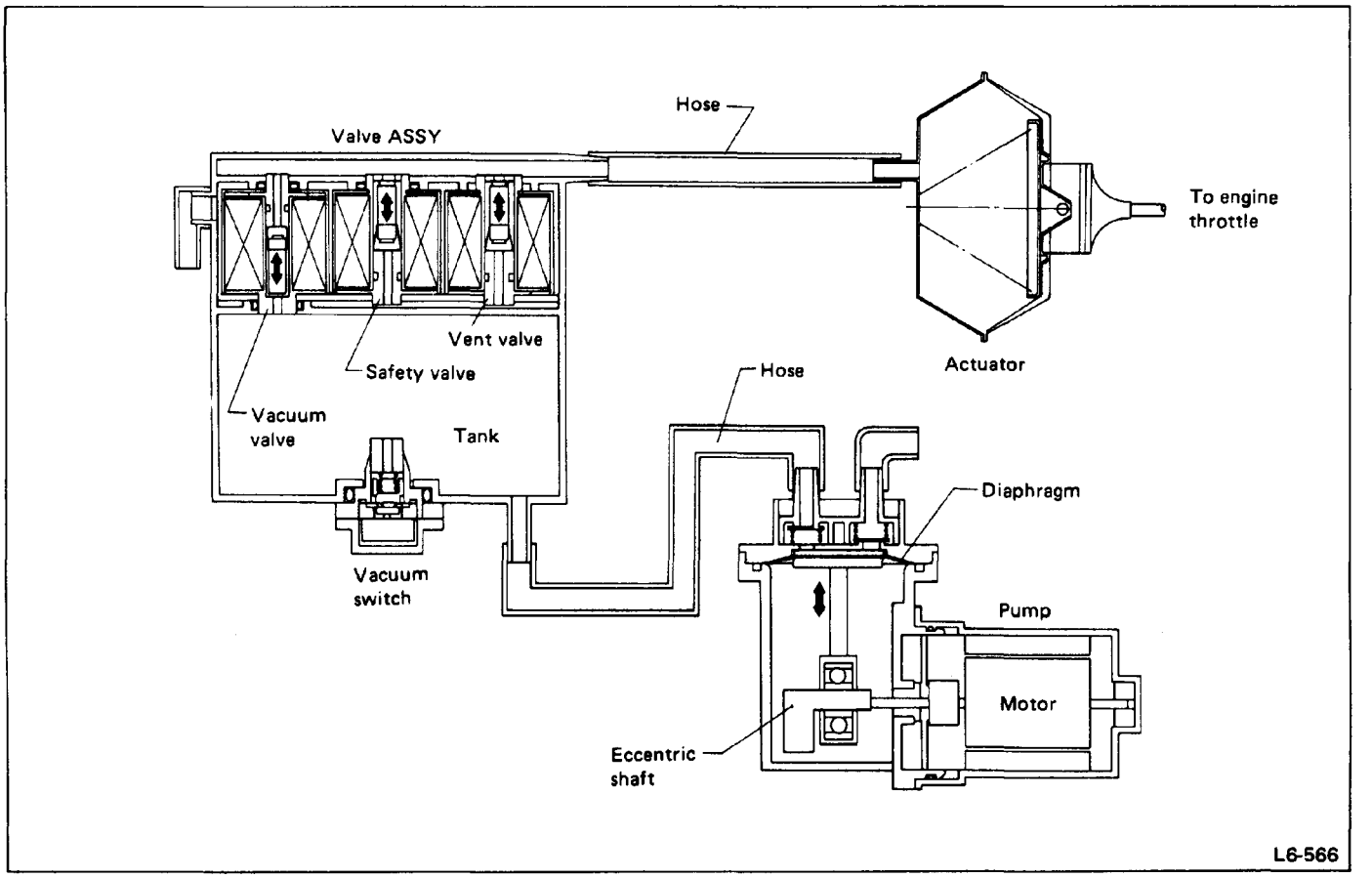

Fig. 82

1) Pump

The pump is controlled by the vacuum switch built into the valve ASSY tank, and is used to supply vacuum to the tank.

Power to the pump is fed when the vacuum switch is turned ON, and the diaphragm is moved up and down by the rotation of the offset shaft fixed to the motor shaft.

2) Valve ASSY

The vacuum valve, vent valve, and safety valve are provided, and their open-close operation lead vacuum/atmospheric pressure to actuator. Also to attached to this assembly is the tank for storing vacuum generated by the pump, and the vacuum switch for controlling the pump to maintain a constant vacuum level in the tank.

If the cruise control is turned on and a constant car speed is attained, the safety valve connected to the atmosphere is closed. Also, the vacuum valve connected to the tank and the vent valve connected to the atmosphere operate to lead the atmosphere/vacuum to the actuator. When the cruise control is cancelled, the vacuum valve closes to shut off the tank vacuum, and the safety valve opens to allow atmospheric pressure to enter the actuator.

The vacuum in the tank is consumed by the operation of the vacuum valve. If the vacuum in the tank reaches −42.7 kPa (−320 mmHg, −12.60 inHg) the vacuum switch is turned ON, and the pump feeds the vacuum into the tank. When the vacuum in the tank reaches −50.7 kPa (−380 mmHg, −14.96 inHg) the vacuum switch turns OFF to stop the pump.

Signal from control unit and valve operation

		Safety valve	Vacuum valve	Vent valve
System OFF		Open	Close	Open
System ON	Memory < actual car speed	Close	Close	Open
	Memory = actual car speed	Close	Close	Close
	Memory > actual car speed	Close	Open	Close

3) Actuator

The diaphragm is operated by vacuum or atmospheric pressure led by each valve, and this diaphragm movement actuates the wire cable via link ASSY to open or close the throttle valve. With the cruise control set to OFF (system OFF state), no diaphragm operation occurs as the atmospheric pressure is kept inside the actuator.

4) Engine throttle

The throttle body is equipped with two throttle cams. One cam is used during acceleration and the other during cruising, in order to open or close the throttle valve. These cams operate independently of each other. In other words, while one cam is operates, the other does not.

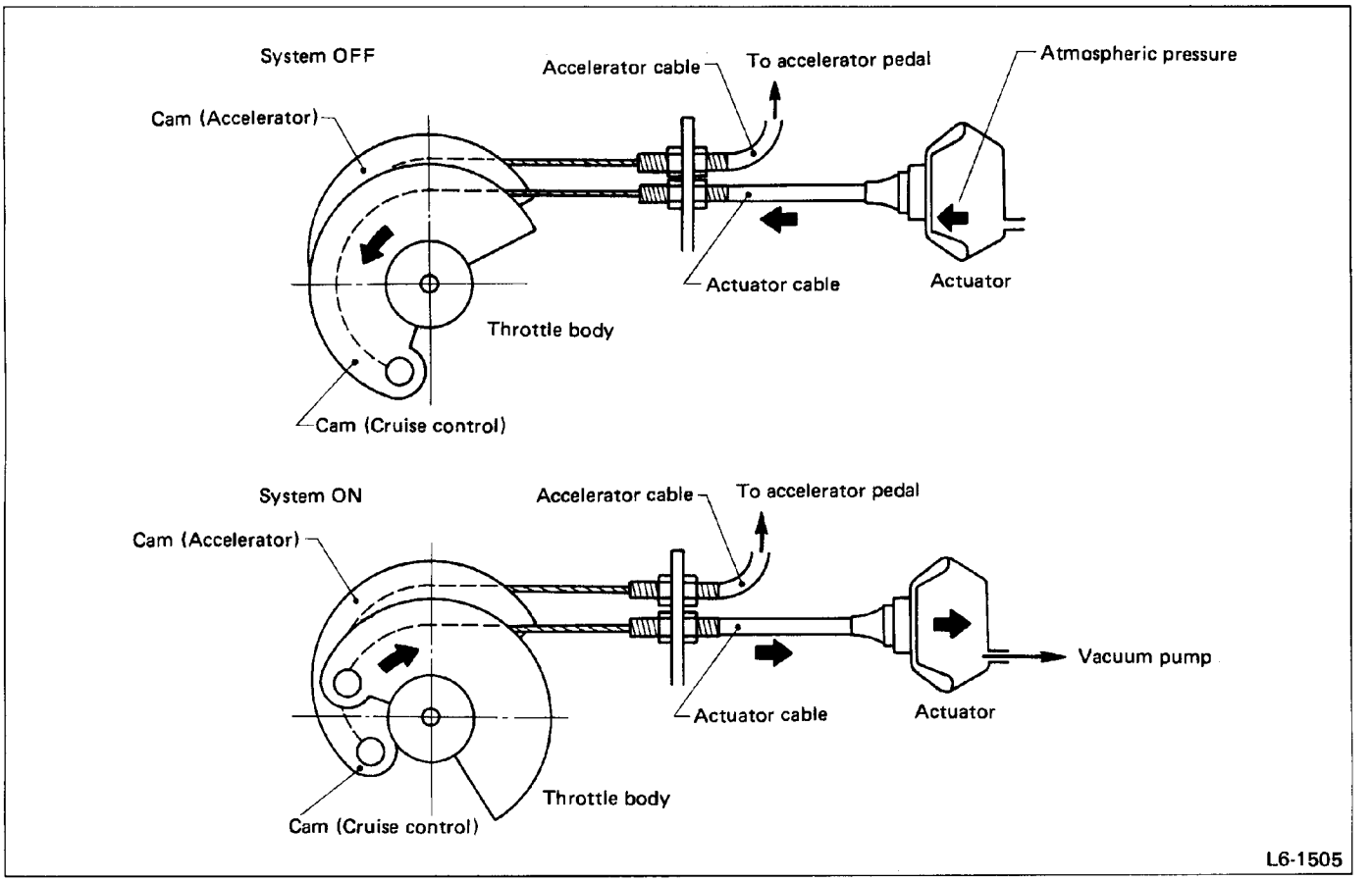

Fig. 83

Control Cable

ADJUSTMENT

a. Do not bend the control cable too sharply; otherwise, it will not operate smoothly.
b. When installing the cam to the inner end of the control cable, do not bend or crush the inner cable.

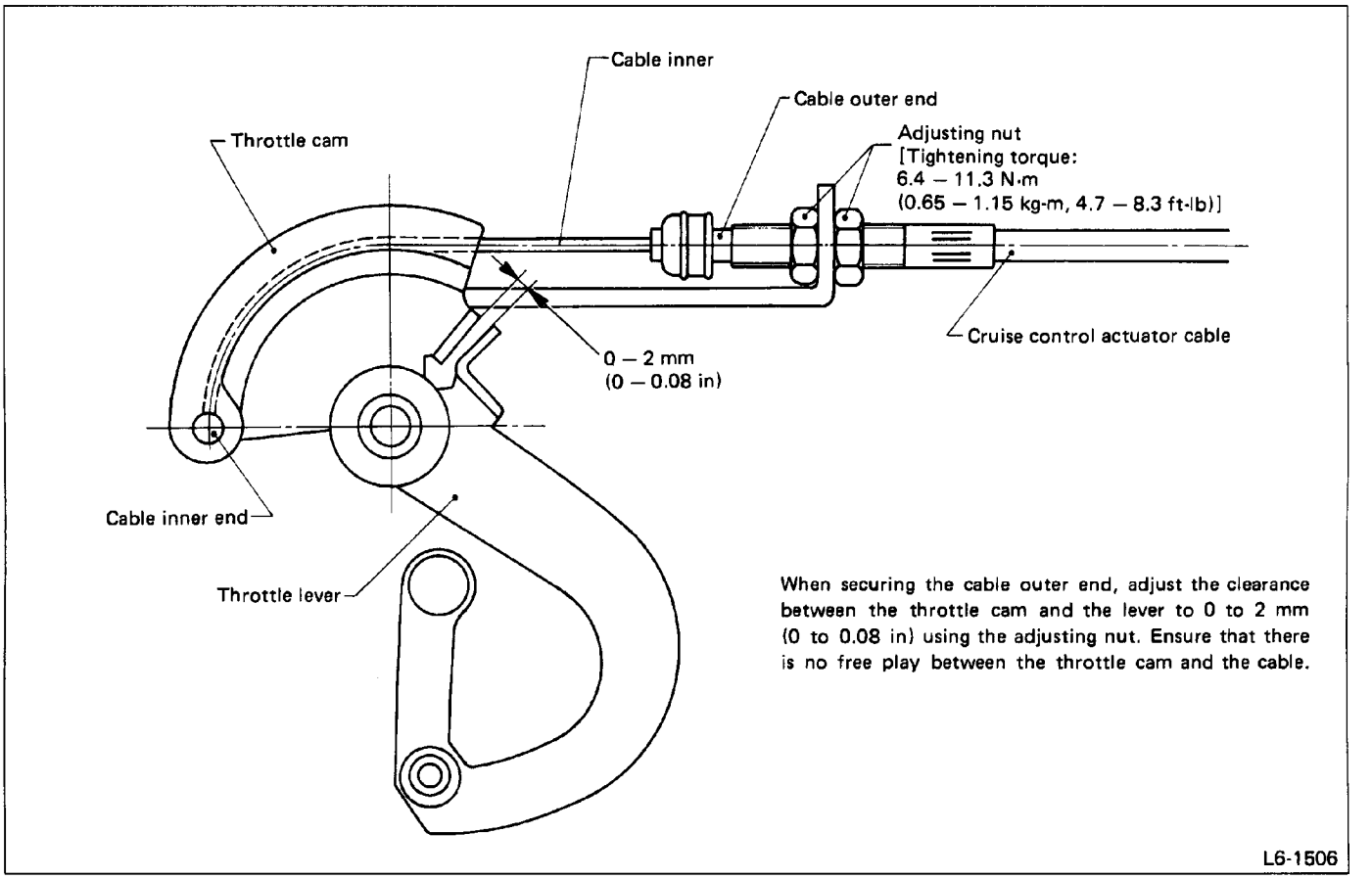

Fig. 84

Vacuum Pump and Valve

REMOVAL

a. Ensure ignition switch is OFF.
b. Be careful because exhaust system and turbocharger temperatures are high while engine was operating.
c. Always keep air cleaner, vacuum hose, etc. free from dirt and dust.

1) Removing air cleaner and air flow meter.
   (1) Loosen hose clamp.
   (2) Remove boot from air flow meter.
   (3) Undo clips on air cleaner cover.
   (4) Place air cleaner cover together with air flow meter on the engine.

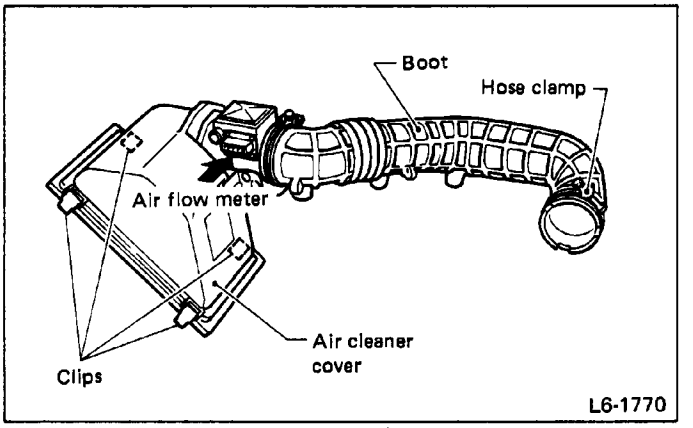

Fig. 85

2) Disconnect wiring harness connector and hose connector of the vacuum pump ASSY.
3) Remove the vacuum pump ASSY and the valve ASSY as unit.

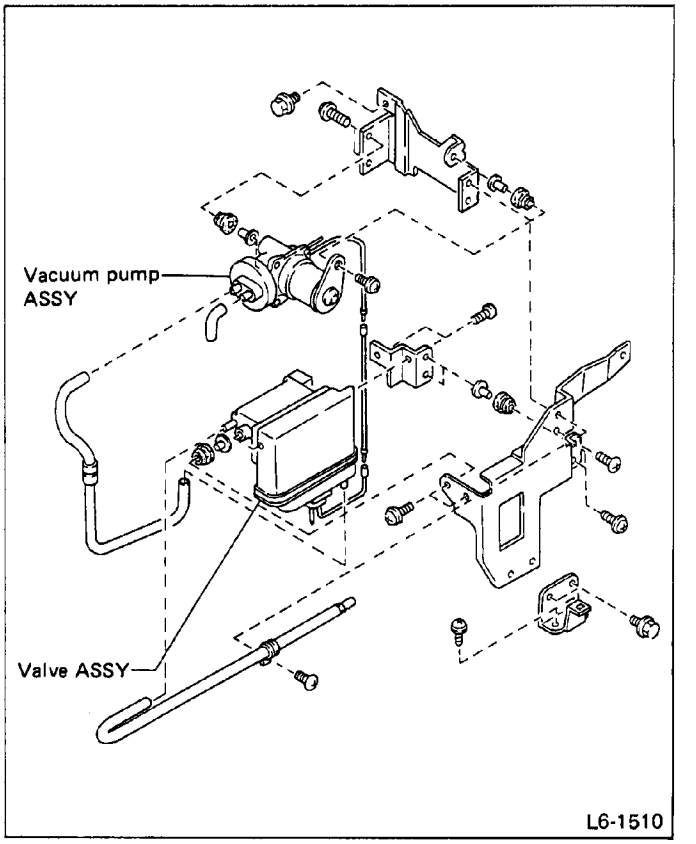

Fig. 86

DISASSEMBLY

1) Disconnect harness connector of vacuum pump ASSY.
2) Remove screws which secure vacuum pump and valve ASSY's to their brackets.
3) Disconnect hoses to separate vacuum pump and valve ASSY's.
4) To reassemble, reverse the above disassembly procedures.

Be sure to connect hoses and connectors properly.

INSTALLATION

To install, reverse removal procedures.

Tightening torque:
M6 bolt:
5.4 – 9.3 N·m (0.55 – 0.95 kg-m, 4.0 – 6.9 ft-lb)
M5 Screw:
2.0 – 2.5 N·m (0.20 – 0.25 kg-m, 1.4 – 1.8 ft-lb)

a. Be sure hoses and connectors are connected properly.
b. Ensure pump issues sound to indicate proper operation when ignition switch and cruise control switch are turned ON.
c. Also ensure pump sound automatically stops when vacuum pressure is charged in tank.

Power Window

OPERATION

Main switch

Main switch consists of auto-switch knob for driver's window, passenger's window switch knob and lock switch knob for passenger's window.

Main switch has the following five positions:

AU and AD .... Driver's window can be opened or closed fully by depressing this position for a moment.

U and D ..... Driver's window can be opened or closed while depressing this position.

N ..... OFF position.

Sub switch

Passenger's window is lowered or raised while sub switch is operated with the lock switch in main switch is in OFF position.

Control unit

Control unit is installed under assistant seat. The control unit consists of transistors, relay, transformer etc. and controls up and down of driver's window in combination with auto switch.

Relay and breaker

Relay and breaker are installed under assistant sheet. The relay provides an ignition interlock to all switches so that windows cannot be operated unless the ignition switch is in "ON" position for safety.

When overcurrent flows, breaker cuts electric current to components and electric wiring from damage and burn out.

Electric motor

Electric motors are provided for window glass regulator of each door to open and/or close the window glass.

SWITCH CONNECTOR AND CONNECTION

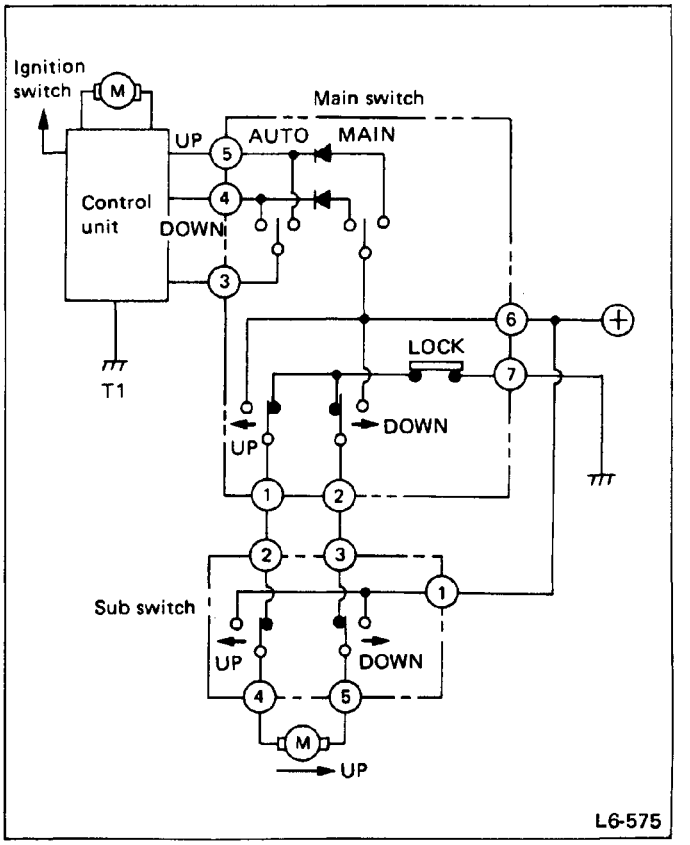

Fig. 87

Main switch

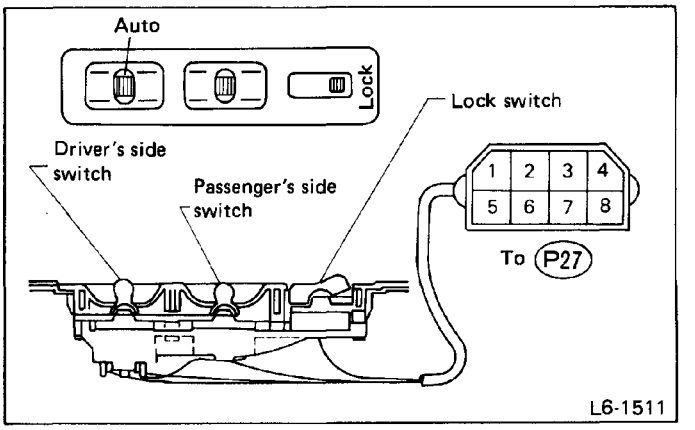

Fig. 88

Connector		Driver's side window switch					Passenger's side window switch			Connection
Terminal	Color	AU	U	N	D	AD	U	N	D	
1	WL									Sub switch (Motor Up)
2	LB									Sub switch (Motor Down)
3	R									Control unit
4	Y									Control unit
5	G									Control unit
6	RW									Ignition switch
7	B	(Lock switch)								Grounding

Sub switch

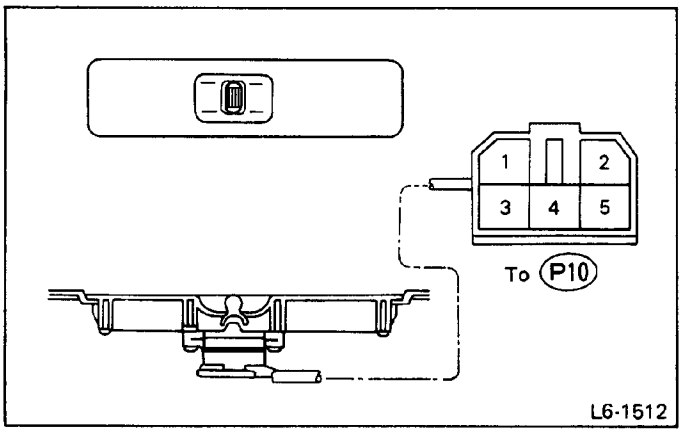

Fig. 89

Connector		Passenger's side window switch			Connection
Terminal	Color	U	N	D	
1	R				Ignition switch
2	B				Main switch
3	BW				Main switch
4	Y				Motor (Up)
5	YR				Motor (Down)

Remote Controlled Rearview Mirror

When adjacent two control knobs are pressed simultaneously, the rearview mirror will move in an oblique direction.

The remote controlled rearview mirror switch consists of a left-right changeover select knob and a control knobs. The switch is ready to function only when the ignition switch is in "ACC" or "ON". Movement of the mirror is accomplished by the motor in the mirror.

SWITCH CONNECTOR AND CONNECTION

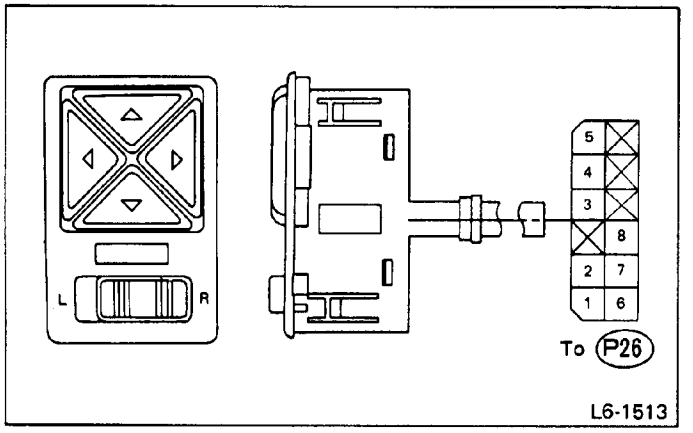

Fig. 90

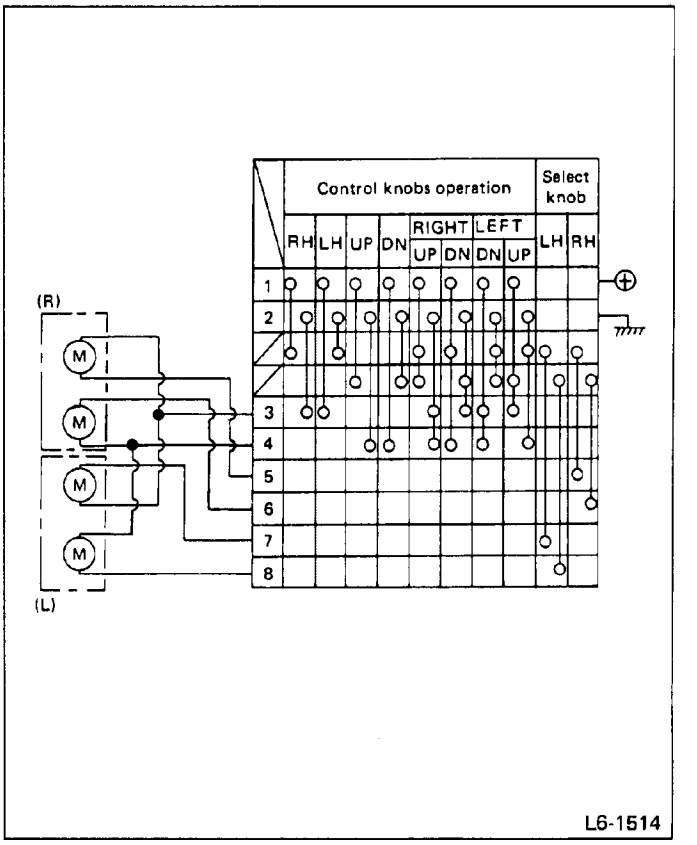

Fig. 91

Connector		Connection
Terminal	Color	
1	LB	Ignition switch (ACC)
2	B	Grounding
3	L	LH & RH mirror motor
4	LW	
5	W	RH mirror motor
6	Y	
7	Br	LH mirror motor
8	G	

REPLACEMENT

ELECTRIC WIRING

The wiring is routed from the instrument panel wiring harness connector to the rearview mirror via the front door cord and the rearview mirror cord. The front door cord can be removed after detaching the grommet. The rearview mirror cord can be detached by removing retaining clips.

First Hold Switch

SWITCH CONNECTOR AND CONNECTION

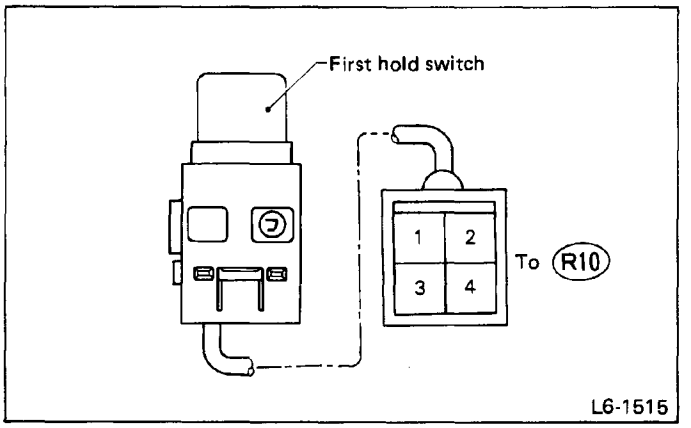

Fig. 92

Connector		OFF	ON	Connection
Terminal	Color			
2	GY			AT control unit
4	B			Grounding
1	R			Lighting switch
3	RG			Illumination control

REPLACEMENT

The first hold switch is secured to the AT select lever indicator from the rear with the two M4 tapping screws. Remove the AT select lever indicator from body when replacing the hold switch.

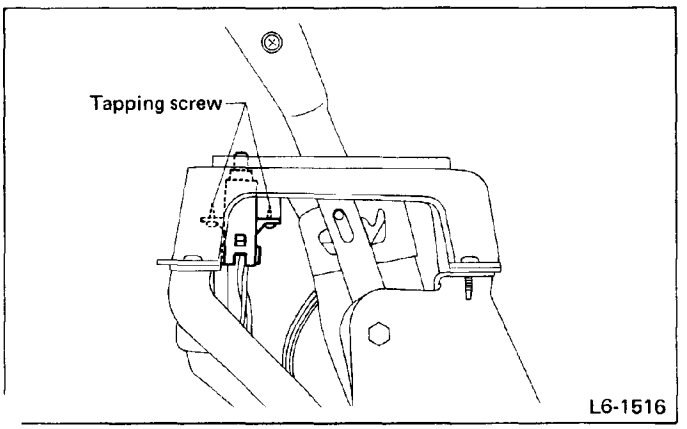

Fig. 93

Differential Lock Switch

The differential lock switch is located beside the parking lever on the console box. When the switch is turned ON, the car is set to "diff. lock driving"; when the switch is turned OFF, the car is set to the "free-driving" mode. The DIFF. LOCK indicator light in the combination meter comes on when the car is set to the "diff. lock driving" mode.

Do not shift driving modes while the wheels are slipping or while making a sharp turn.

SWITCH CONNECTOR AND CONNECTION

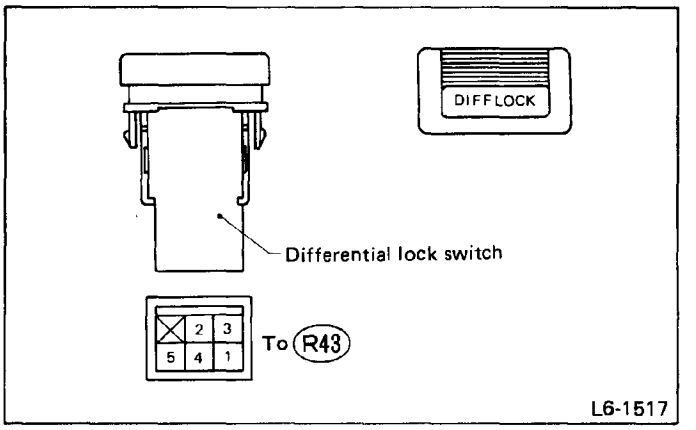

Fig. 94

Connector		OFF	ON	Connection
Terminal	Color			
1	BW			Ignition switch
2	GY			Solenoid valve (UNLOCK)
3	L			Solenoid valve (LOCK)
4	R			Lighting switch
5	RY			Illumination control

REPLACEMENT

The differential lock switch is fitted in the console box via the differential lock switch case.

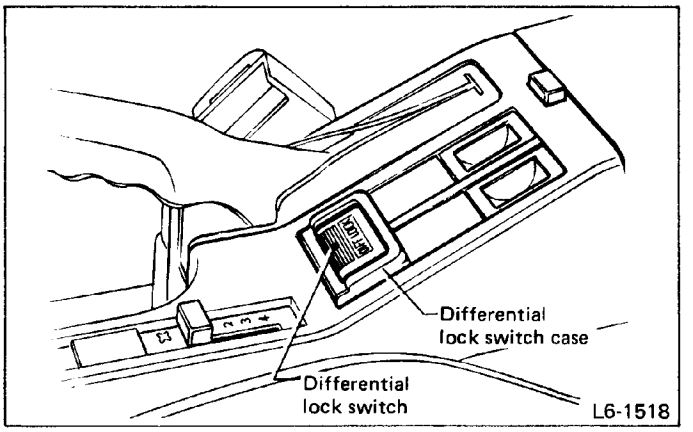

Fig. 95

REPLACEMENT

The fog light switch is fitted in the console box. Using a small screwdriver, pry up the switch, being careful not to damage the console box.

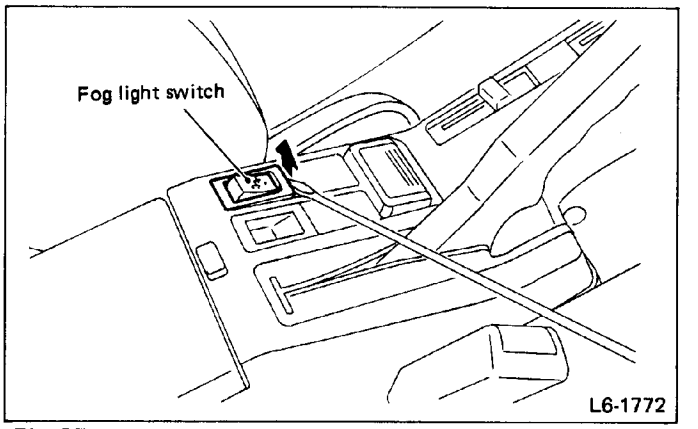

Fig. 97

Fog Light Switch

SWITCH CONNECTOR AND CONNECTION

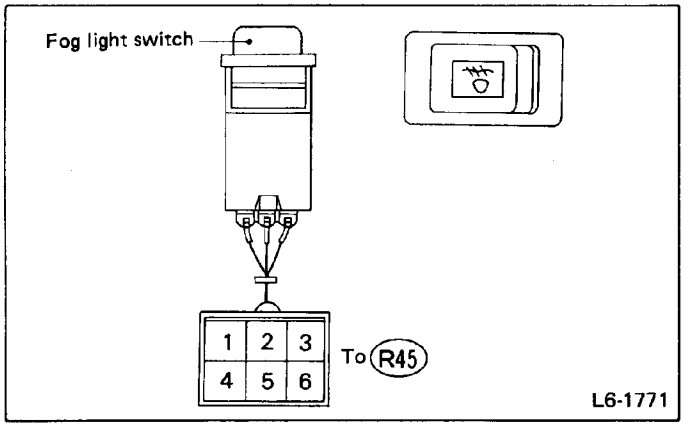

Fig. 96

Connector		OFF	ON	Connection
Terminal	Color			
1	W			Fog light relay
3	RB			Lighting switch
2	–			–
4	–			–
5	R			Illumination control (Power supply)
6	RG			Illumination control

Speed Warning Buzzer

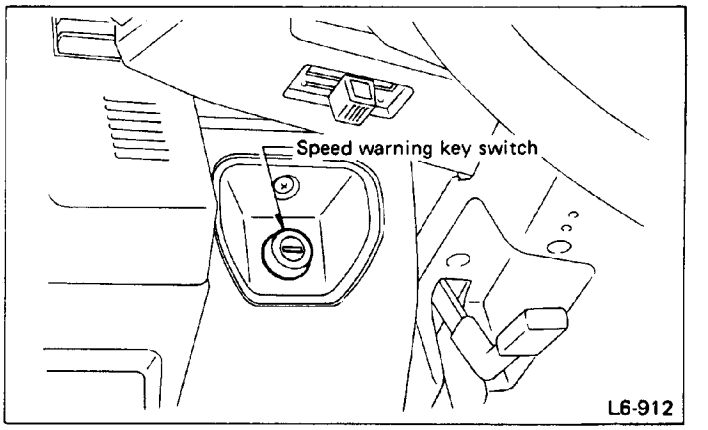

Fig. 98

When car speed exceeds 100 km/h (60 MPH), the speed warning switch built into the computer will turn on. If the speed warning key switch has already been set to "ON", the buzzer in the instrument panel will sound continuously.

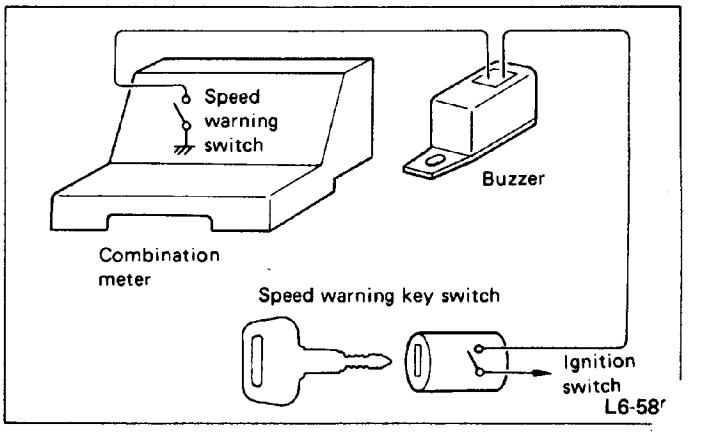

Fig. 99

Automatic Shoulder Belt and Key Warning Chime (Except Canada model)

PRECAUTIONS

a. In case the connector related to the automatic shoulder belt has been disconnected for repairs of the automatic shoulder belt or its related parts or for repairs of other parts, be sure to disconnect once the battery and reset the control unit.
If the connector of the automatic shoulder belt control unit or the connector of front or rear limit switch has once been disconnected during repairs, the control unit can enter the failure mode when the connector is reconnected, making the automatic shoulder belt inoperative.
b. If the automatic shoulder belt fails to operate, be sure to troubleshoot before disconnecting the battery.
Even if the automatic shoulder belt does not have faulty parts, it can become inoperative when the shoulder belt anchor is forced down or the front or rear limit switch is operated manually. In such case, if you disconnect the battery, the trouble will be corrected automatically without giving you the chance to determine its cause.
c. For troubleshooting electrical parts, refer to Chapter 6-3.

MOTOR DRIVE CIRCUIT

Operation

The door switch monitors the opening/closing of the door to rotate the motor in the corresponding (standard or reverse) direction.
A limit switch, situated at each end of the rail, monitors the front/rear limit position of the shoulder anchor.
When the door is opened, the motor activates so that the shoulder belt moves from the rear-limit position (fasten) to the front-limit position (release) and stops.
When the door is closed, the motor activates so that the shoulder belt moves from the front-limit position (release) to the rear-limit position (fasten) and stops.

Malfunction

Motor output timer control

If the limit switch does not activate within 13 seconds after the motor begins to run, the timer control activates to disconnect the motor from its drive circuit.

SEAT BELT WARNING SYSTEM

No.	Type of belt	Used: ○ Not used: X		Warning chime		Warning lamp		Priority	Remarks
				Duration of operation		Duration of operation			
				First 4 – 8 seconds	Thereafter	First 4 – 8 seconds	Thereafter		
1	Driver's lap belt	X		Sounds	OFF	Blinks	OFF	1	Condition of lap belt "Not Used": Ignition switch ON and buckle switch ON *
		○		OFF		Blinks	OFF		
2	Driver's shoulder belt	X	Condition 1	OFF		Illuminates		2	Condition of shoulder belt "Not Used": Condition 1 – Ignition switch ON and rear limit switch ON * Condition 2 – Ignition switch ON, rear limit switch OFF * and shoulder buckle switch ON *
			Condition 2	Sounds	OFF	Blinks	Illuminates	3	
		○		OFF		OFF		–	
3	Passenger's shoulder belt	X	Condition 1	OFF		Illuminates		4	
			Condition 2	Sounds	OFF	Blinks	Illuminates	5	
		○		OFF		OFF		–	

The asterisk "*" refers to a normally-closed switch (normally-on type).

a. The warning chime and warning light outputs are generated from the same system. For this reason, a higher priority output will preempt those of lower priority.
b. The lap belt warning chime and warning light activate when the ignition switch is turned ON. However, warning for the shoulder belts begins when condition 1 or 2 exists.

KEY WARNING CHIME

Only the driver's side.

No.	Door	Warning chime	Remarks
1	Closed	OFF	Chime operating conditions: Key is inserted into ignition and turned to any position except ON or START.
2	Open	Sounds	

CONNECTION

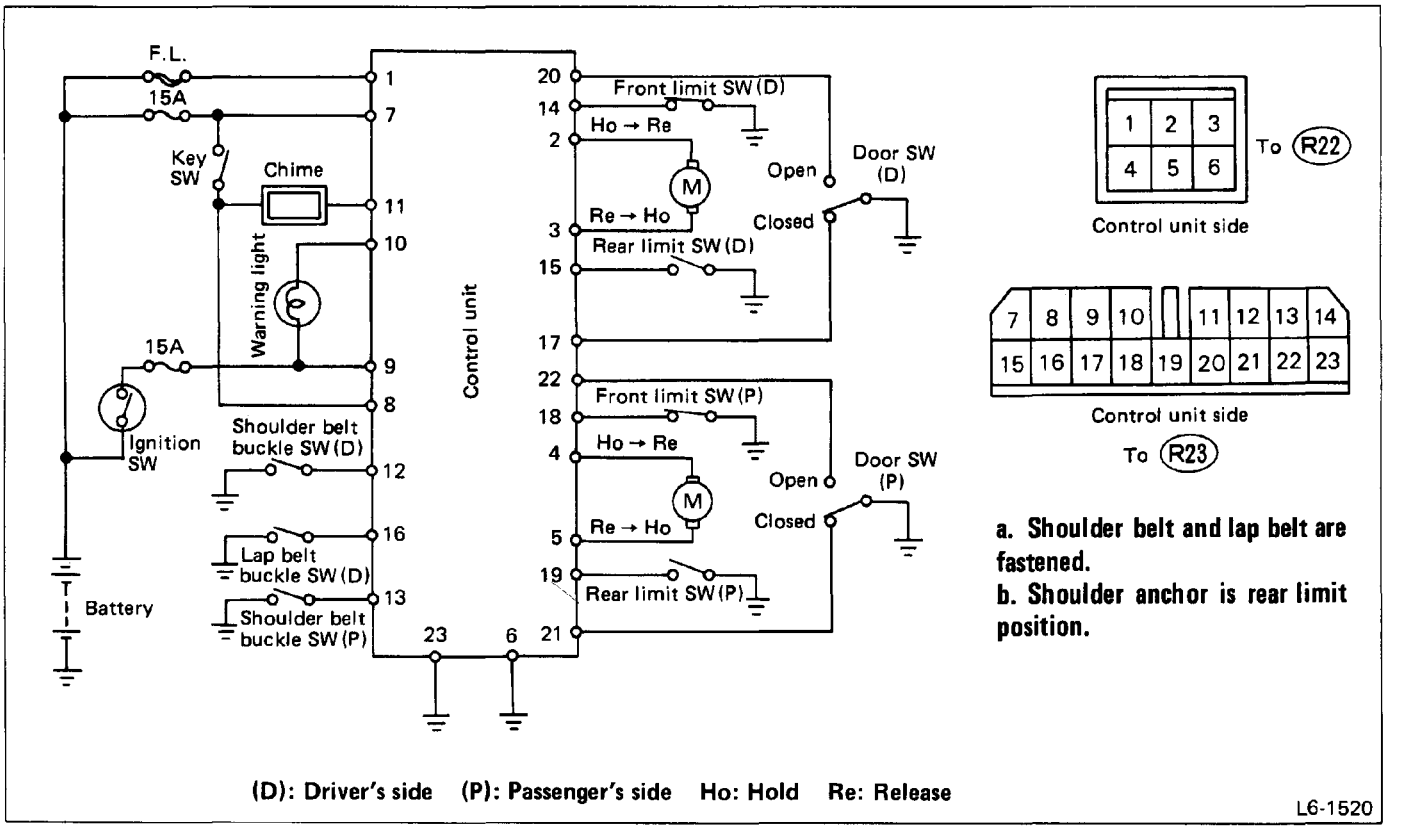

Fig. 100

Seat Belt and Key Warning Chime (Canada model Only)

Seat belt & key warning chime participates in both seat belt warning system and key warning system.

Seat belt warning system

Fasten seat belt warning light in combination meter turns on for approx. six (6) seconds after turning ignition switch to ON position.
Also, only when driver's seat belt is not fastened, the chime will sound about four (4) times.

Key warning system

The chime will sound while door is opened with the key plate inserted in ignition switch.

WIRING DIAGRAM AND TROUBLESHOOTING

6-3

SUBARU

1988

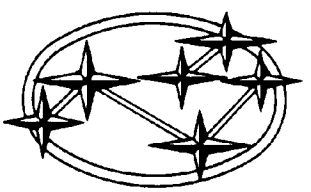

	Page
GENERAL DESCRIPTION	2
ELECTRICAL WIRING HARNESS	7
Front Wiring Harness	8
Engine Wiring Harness	12
Instrument Panel Wiring Harness	14
Rear Wiring Harness	18
Power Window Main Harness and Door Cord	24
Common Grounding	26
ELECTRICAL UNIT LOCATION	28
WIRING DIAGRAM AND TROUBLESHOOTING	36
Power Supply Routing	36
Engine Electrical System	39
Combination Meter	43
Trip Computer	57
Lighting System	60
Front Fog Lamp	66
Turn Signal and Hazard Warning Light	67
Back-Up Light	71
Stop Light	72
Room Light and Door Switch	74
Trunk Room Light	77
Seat Belt and Key Warning System	78
Electronic-Controlled Motor Drive Power Steering System	91
Parking Brake System	105
Brake Fluid Level Warning System	106
4WD-MT System	107
Automatic Transmission Control System	109
Windshield Wiper & Washer	113
Headlight Washer	114
Radio and Auto Antenna	115
Horn and Cigarette Lighter	118
Clock	121
Rear Window Defogger	122
Remote Controlled Rearview Mirror	124
Power Window	126
Door Lock System	130
Speed Alarm	131
Cruise Control System	133
Mode Selector	138
Blower Motor	139
Pneumatic Suspension System	140
OVERALL WIRING DIAGRAM	000

GENERAL DESCRIPTION

Contents of Manual and Its Usage

This manual consists primarily of the following four elements with respect to the electrical system:

- WIRING HARNESS DIAGRAM
- UNIT LOCATION DIAGRAM
- WIRING DIAGRAM
- TROUBLESHOOTING CHART

WIRING HARNESS DIAGRAM

The wiring harness diagram shows the wiring routes of the main harness and illustrates the positions of the connectors. The connectors are numbered along with the number of poles, external colors, and mating connections in the accompanying list. The exterior color column has been left blank whenever the general white connectors are referred to. In addition, the earth position of the harness is clearly indicated by another detailed illustration.

UNIT LOCATION DIAGRAM

The diagram clearly shows the major electric units and devices and their connectors which are located in hard-to-see places.

WIRING DIAGRAM

The wiring diagram of each system is illustrated so that you can understand the path through which the electric current flows from the battery.

Sketches and codes are used in the diagrams. They should read as follows:

1) Each connector and its terminal position are indicated by a sketch of the connector in a disconnected state which is viewed from the front, as shown in figure.

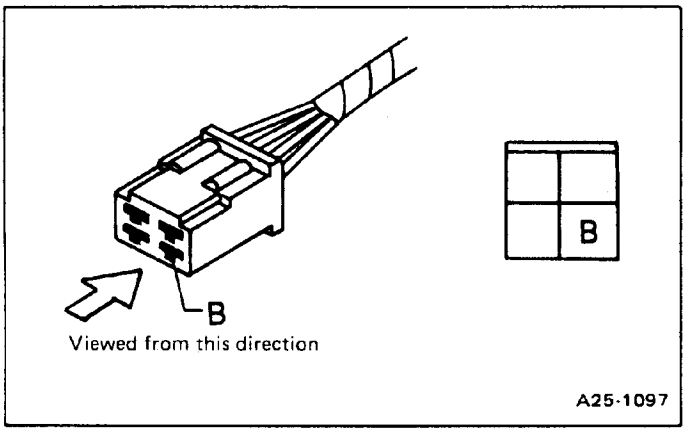

Fig. 1

2) The number of poles, male or female, presence of a lock, and wire color of each terminal are indicated in the sketch of each connector.

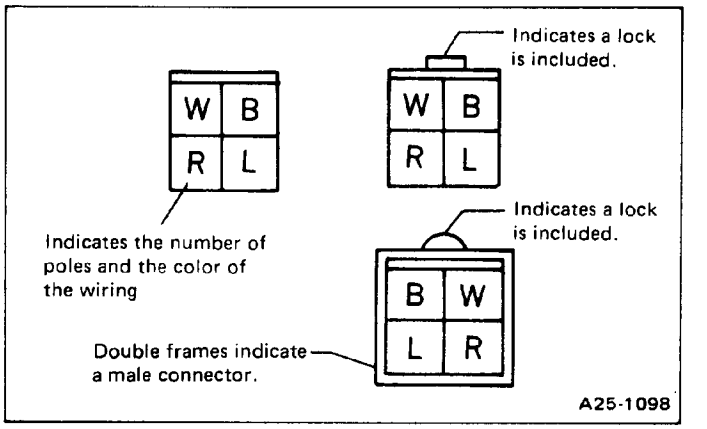

Fig. 2

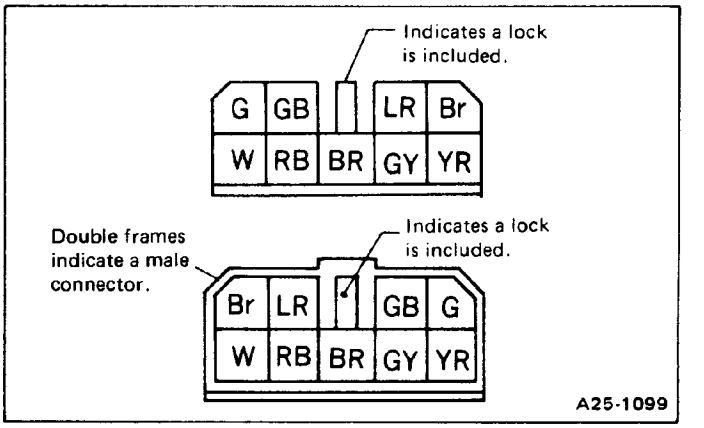

Fig. 3

3) The following color codes are used to indicate the colors of the wires used.

Color code	Color
L	Blue
B	Black
Y	Yellow
G	Green
R	Red
W	White
Br	Brown
Lg	Light green
Gr	Gray
(SB)	(Sealed wire)

4) The wire color code, which consists of two letters (or three letters including Br or Lg), indicates the standard color (base color of the wire covering) by its first letter and the stripe marking by its second letter.

5) The wire diameter is indicated by the numeral of its nominal sectional area (mm^2) prefixed to the color code. However, for a wire whose sectional area is 0.5 mm^2, the pre fix "0.5" is omitted. The table below lists the nominal sectional areas and allowable currents of the wires.

Nominal sectional area mm^2	No. of strands/ strand diameter	Outside diameter of finished wiring mm	Allowable current Amps/ 40°C (104°F)
0.3	7/0.26	1.8	7
0.5	7/0.32	2.2 (or 2.0)	12
0.75	30/0.18	2.6 (or 2.4)	16
0.85	11/0.32	2.4 (or 2.2)	16
1.25	16/0.32	2.7 (or 2.5)	21
2	26/0.32	3.1 (or 2.9)	28
3	41/0.32	3.8 (or 3.6)	38
5	65/0.32	4.6 (or 4.4)	51
8	50/0.45	5.5	67

a. The allowable current in the above table indicates the tolerable amperage of each wire at an ambient temperature of 40°C (104°F).
b. The allowable current changes with ambient temperature. Also, it changes if a bundle of more than two wires is used.

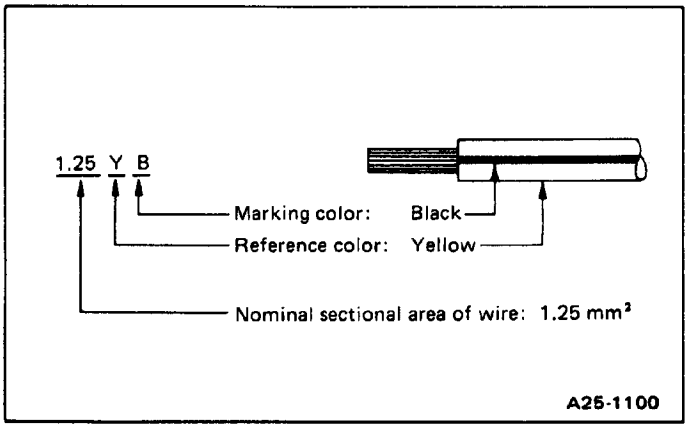

Fig. 4

6) Each unit is directly grounded to the body or indirectly grounded through a harness ground terminal. Different symbols are used in the wiring diagram to identify the two grounding systems.

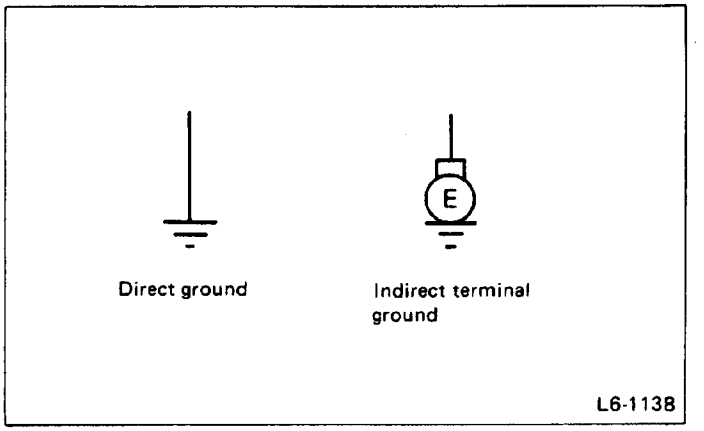

Fig. 5

7) Relays are classified as normally-open or normally-closed. The normally-closed relay has one or more contacts.
The wiring diagram shows the relay mode when the energizing circuit is OFF.

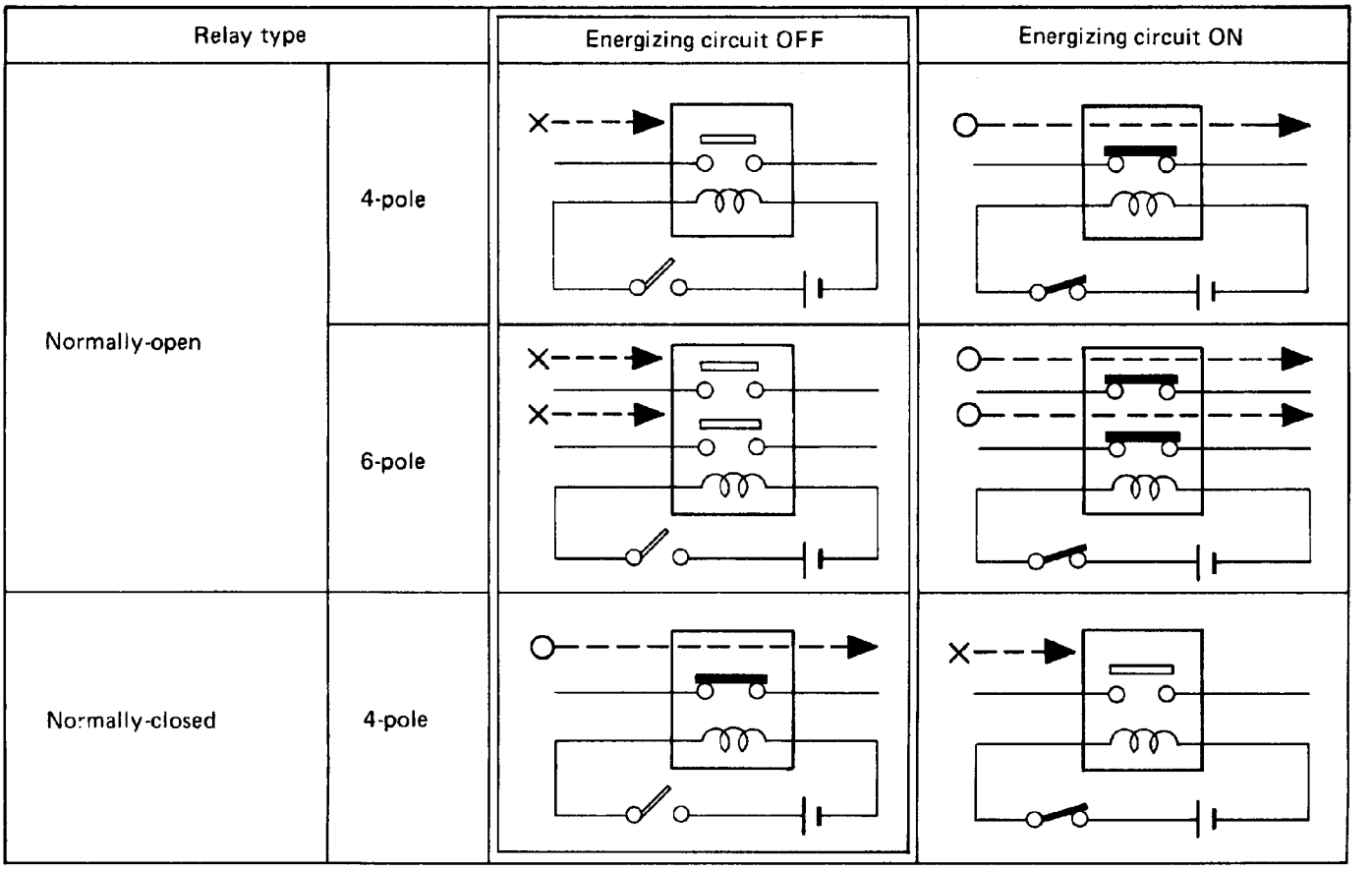

Fig. 6

8) The overall wiring diagram of the vehicle is provided at the end of the manual.

TROUBLESHOOTING CHART

The troubleshooting chart explains trouble diagnosis of each system by using step-by-step procedures which are laid out so that the steps can be followed by tracing the wiring diagram. For locations of the connectors and those of the electric units and devices, refer to the wiring harness diagram and unit location diagram.

Working Precautions

Precautions when working with the parts mounted on the vehicle

1) When working under a vehicle which is jacked up, always be sure to use safety stands.
2) The parking brake must always be applied during working. Also, in automatic transmission vehicles, keep the select lever set to the P (Parking) range.
3) Be sure the workshop is properly ventilated when running the engine. Further, be careful not to touch the belt or fan while the engine is operating.
4) Be careful not to touch hot metal parts, especially the radiator and exhaust system immediately after the engine has been shut off.

Precautions in trouble diagnosis and repair of electric parts

1) The battery cable must be disconnected from the battery's (–) terminal, and the ignition-starter switch must be set to the OFF position, unless otherwise required by the troubleshooting chart.

2) Securely fasten the wiring harness with clamps and clips so that the harness does not interfere with the body end parts or edges and bolts or screws.

3) When installing parts, be careful not to catch them on the wiring harness.

4) When disconnecting a connector, do not pull the wires, but pull while holding the connector body.

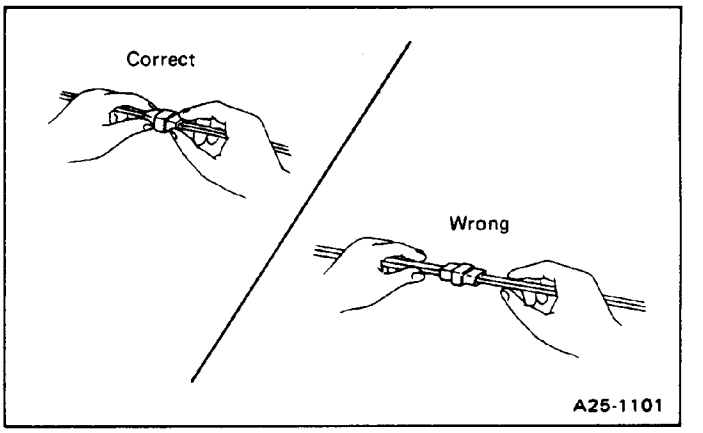

Fig. 7

5) To disconnect a lock type connector, press the lock release lightly by hand. To connect, insert the connector until it snaps and confirm that it is tightly connected.

ELECTRICAL WIRING HARNESS

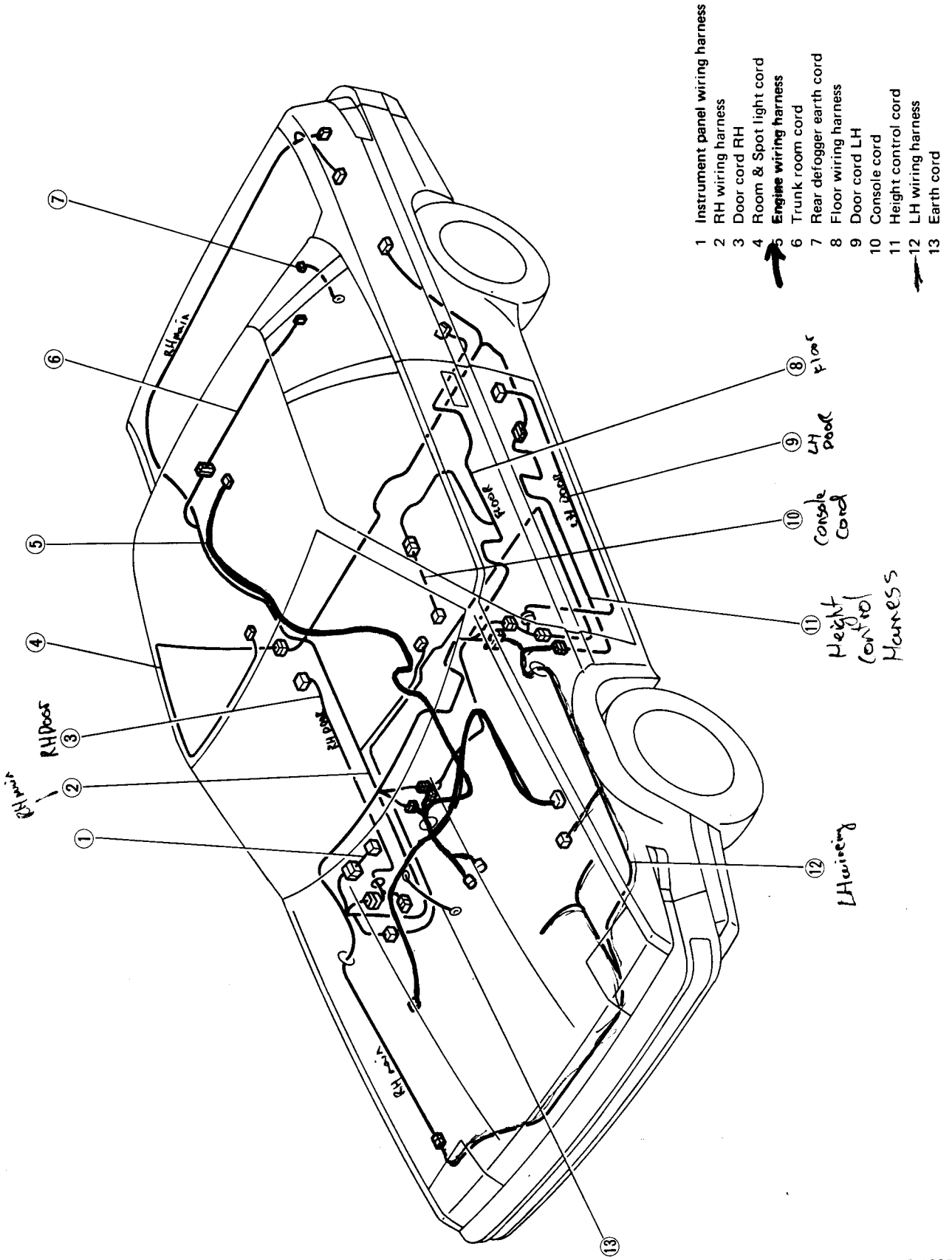

Fig. 8

L6-1695

Front Wiring Harness

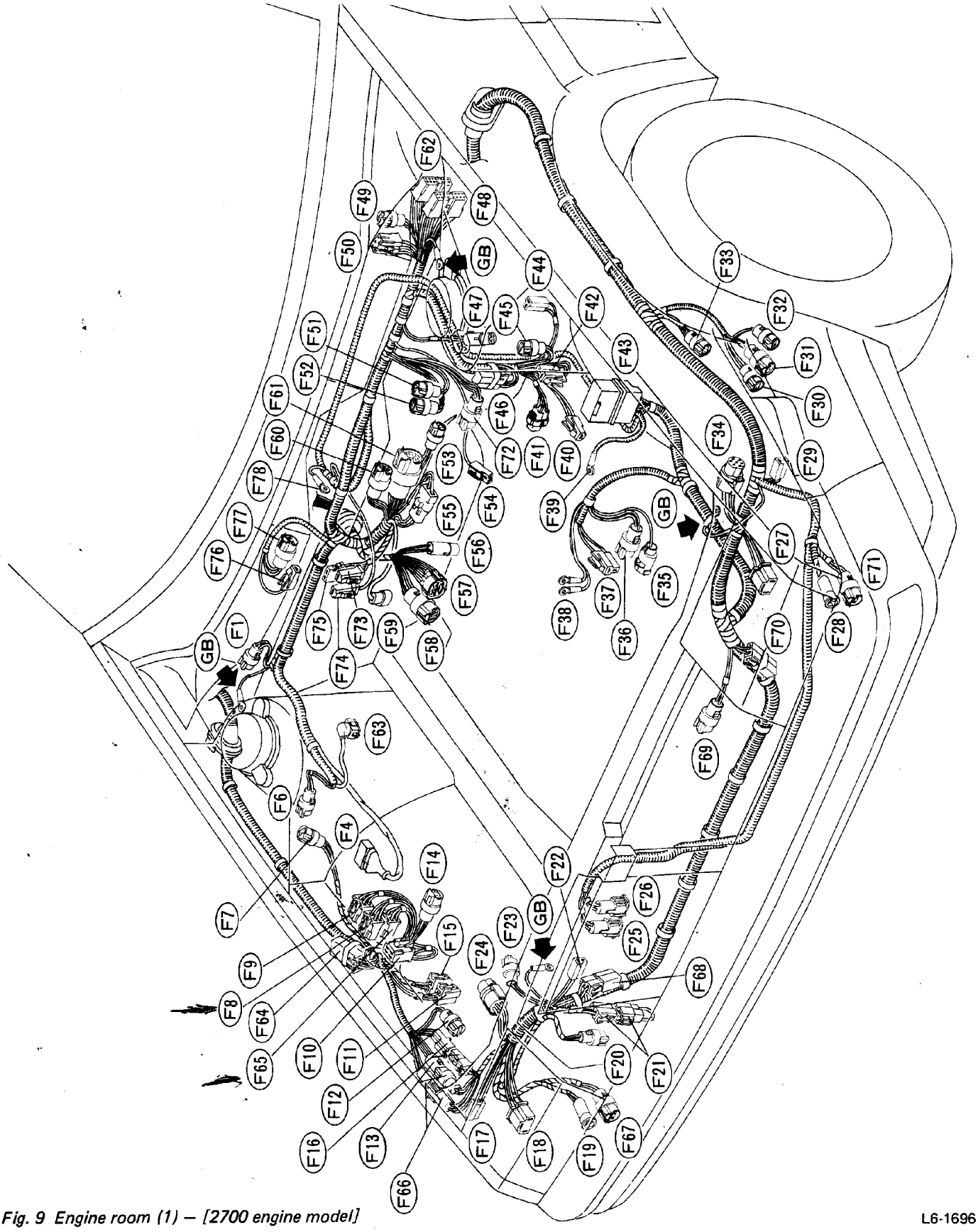

Fig. 9 Engine room (1) – [2700 engine model]

L6-1696

Connector			Connecting to	
No.	Pole	Appearance	No.	Name
F1	2			Solenoid valve RH (Air suspension)
F4	6	Black		Air flow meter
F6	2			Resistor (AT control)
F7	4			Height sensor (Air suspension)
F8	4	Black		Main fan relay
F9	4	Black		Air-conditioner relay
F10	4	Brown		Fog lamp & A/C fuse
F11	2			Front washer pump
F12	2	Black		Outside temperature sensor
F13	3			LH wiring harness ↔ RH wiring harness
F14	6			Vacuum pump (Cruise control)
F15	2			Headlight washer pump
F16	2			LH wiring harness ↔ RH wiring harness
F17	2			Side marker light RH
F18	3			Headlight RH
F19	3			Front combination light RH
F20	4			Pressure switch (A/C)
F21	2	Brown		Water temperature cut switch (A/C)
F22	2	Black		Thermoswitch
F23	2	Black		Main fan motor
F24	6			Retractable headlight motor RH
F25	2			Horn RH
F26	2			Horn LH
F27	3			Headlight LH
F28	3			Front combination light LH
F29	2			Side marker light LH
F30	4			Compressor/Air discharge solenoid valve (Air suspension)
F31	3			Pressure switch (Air suspension)
F32	2			Air charge solenoid valve (Air suspension)
F33	4			Height sensor (Air suspension)
F34	6			Retractable headlight motor LH
F35	1			Compressor (A/C)
F36	2	Black		Pulser coil (A/C)
F37	2			Alternator
F38	1 x 2			Alternator
F39	1			Battery
F40	1	Black		Grounding (Condenser)
F41	4			Crank angle sensor
F42	2	Black		Ignition coil
F43				Fusible link
F44	2	Brown		FWD switch (Full-time 4WD AT)
F45	2	Black		Ignition coil
F46	2	Black		Condenser
F47	3	Black		Brake fluid level sensor
F48	17	Black		Check connector

Connector			Connecting to	
No.	Pole	Appearance	No.	Name
F49	2			Solenoid valve LH (Air suspension)
F50	5			Air suspension relay
F51	3	Black		Front wiper motor
F52	4			Front wiper motor
F53	4			Diff. lock solenoid valve
F54	1	Black		Starter motor
F55	2	Black		Junction (AT)
F56	3	Black	E21	Rear wheel speed sensor (4WD-AT)
F57	12	Black	E17	Inhibitor switch (AT)
	4		E17	Transmission cord (Diff. lock/Back switch) (MT)
F58	12	Black	E16	Transmission (AT control)
	2	Black	E16	Transmission cord (Neutral switch) (MT)
F59	1	Black		O_2 sensor
F60	12		E8	Engine wiring harness
F61	16	Black	E7	Engine wiring harness
F62	11	Brown		Check connector
F63	3			By-pass air control
F64	4			Sub-fan diode
F65	4	Black		Sub-fan relay
F66	3			LH wiring harness ↔ RH wiring harness
F67	2			Front fog lamp RH
F68	2	Black		Main fan condenser
F69	2			Sub-fan motor
F70	2	Black		Sub-fan condenser
F71	2			Front fog lamp LH
F72	3	Green		Power controller
F73	1			MPS heater relay
F74	1			MPS heater relay
F75	2			MPS heater relay
F76	1			MPS fluid heater
F77	2			MPS temperature sensor
F78	1			MPS pump motor

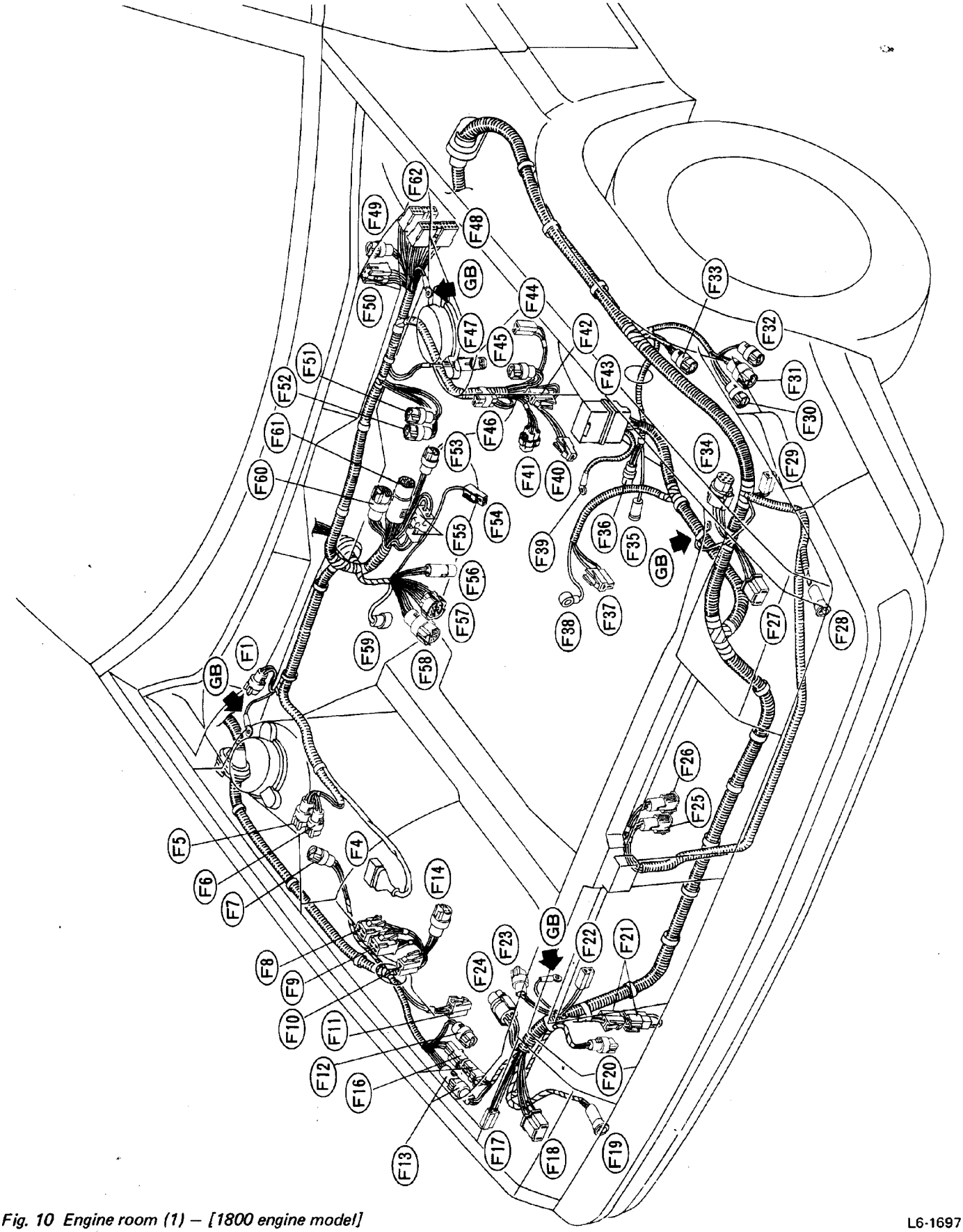

Fig. 10 Engine room (1) – [1800 engine model]

L6-1697

Connector			Connecting to	
No.	Pole	Appearance	No.	Name
F1	2			Solenoid valve RH (Air suspension)
F4	6	Black		Air flow meter
F5	6	Black		Dropping resistor (Engine control)
F6	2			Resistor (AT control)
F7	4			Height sensor (Air suspension)
F8	4	Black		Radiator fan relay
F9	4	Black		Air-conditioner relay
F10	2	Black		Air-conditioner fuse
F11	2			Front washer pump
F12	2	Black		Outside temperature sensor
F13	3			LH wiring harness ↔ RH wiring harness
F14	6			Vacuum pump (Cruise control)
F16	2			LH wiring harness ↔ RH wiring harness
F17	2			Side marker light RH
F18	3			Headlight RH
F19	3			Front combination light RH
F20	4			Pressure switch (A/C)
F21	2	Brown		Water temperature cut switch (A/C)
F22	2	Black		Thermoswitch
F23	2			Radiator fan motor
F24	6			Retractable headlight motor RH
F25	2			Horn RH
F26	2			Horn LH
F27	3			Headlight LH
F28	3			Front combination light LH
F29	2			Side marker light LH
F30	4			Compressor/Air discharge solenoid valve (Air suspension)
F31	3			Pressure switch (Air suspension)
F32	2			Air charge solenoid valve (Air suspension)
F33	4			Height sensor (Air suspension)
F34	6			Retractable headlight motor LH
F35	1			Compressor (A/C)
F36	2	Black		Pulser coil (A/C)
F37	2			} Alternator
F38	1			
F39	1			Battery
F40	1	Black		Grounding (Condenser)
F41	4			Crank angle sensor
F42	2	Black		Ignition coil
F43				Fusible link
F44	2	Brown		FWD switch (Full-time 4WD AT)
F45	2	Black		Ignition coil
F46	2	Black		Condenser
F47	3	Black		Brake fluid level sensor
F48	17	Black		Check connector

Connector			Connecting to	
No.	Pole	Appearance	No.	Name
F49	2			Solenoid valve LH (Air suspension)
F50	5			Air suspension relay
F51	3	Black		} Front wiper motor
F52	4			
F53	4			4WD/FWD solenoid valve (MT)
F54	1	Black		Starter motor
F55	2	Black		Junction (AT)
F56	3	Black	E21	Rear wheel speed sensor (4WD-AT)
F57	12	Black	E17	Inhibitor switch (AT)
	4		E17	Transmission cord (4WD or Diff. lock/Back switch) (MT)
F58	12	Black	E16	Transmission (AT control)
	2	Black	E16	Transmission cord (Neutral switch) (MT)
F59	1	Black		O_2 sensor
F60	16		E8	} Engine wiring harness
F61	16	Black	E7	
F62	11	Brown		Check connector

Engine Wiring Harness

1800 engine model

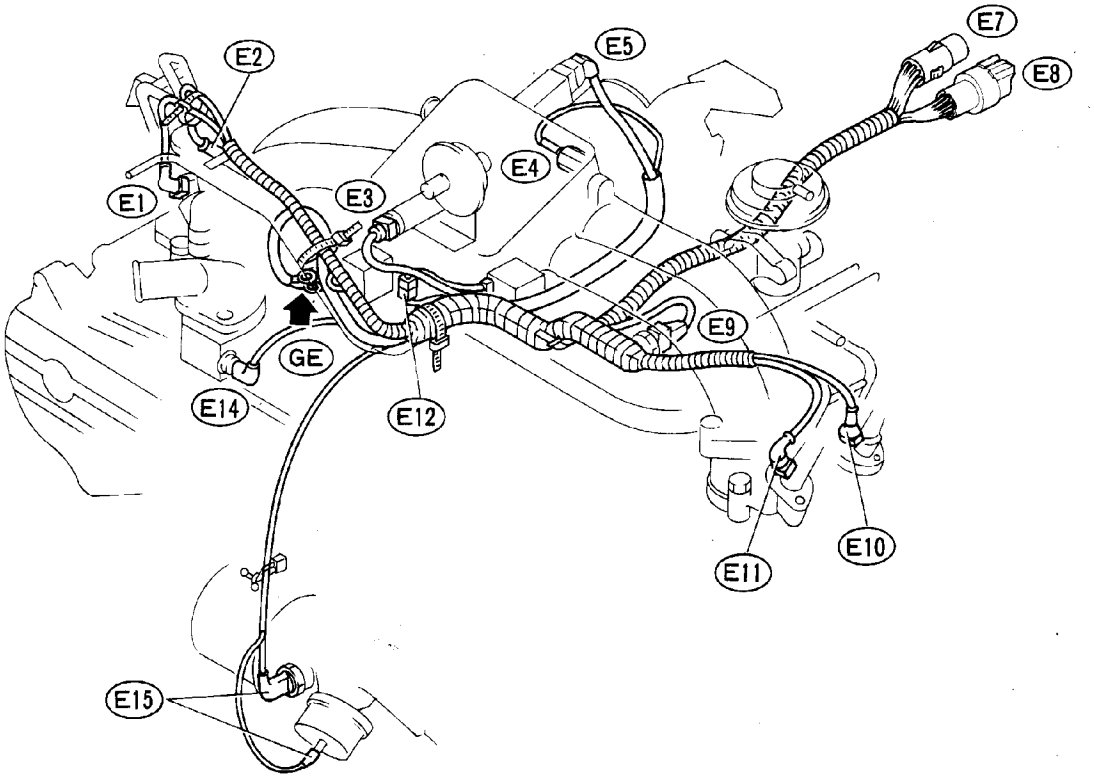

2700 engine model

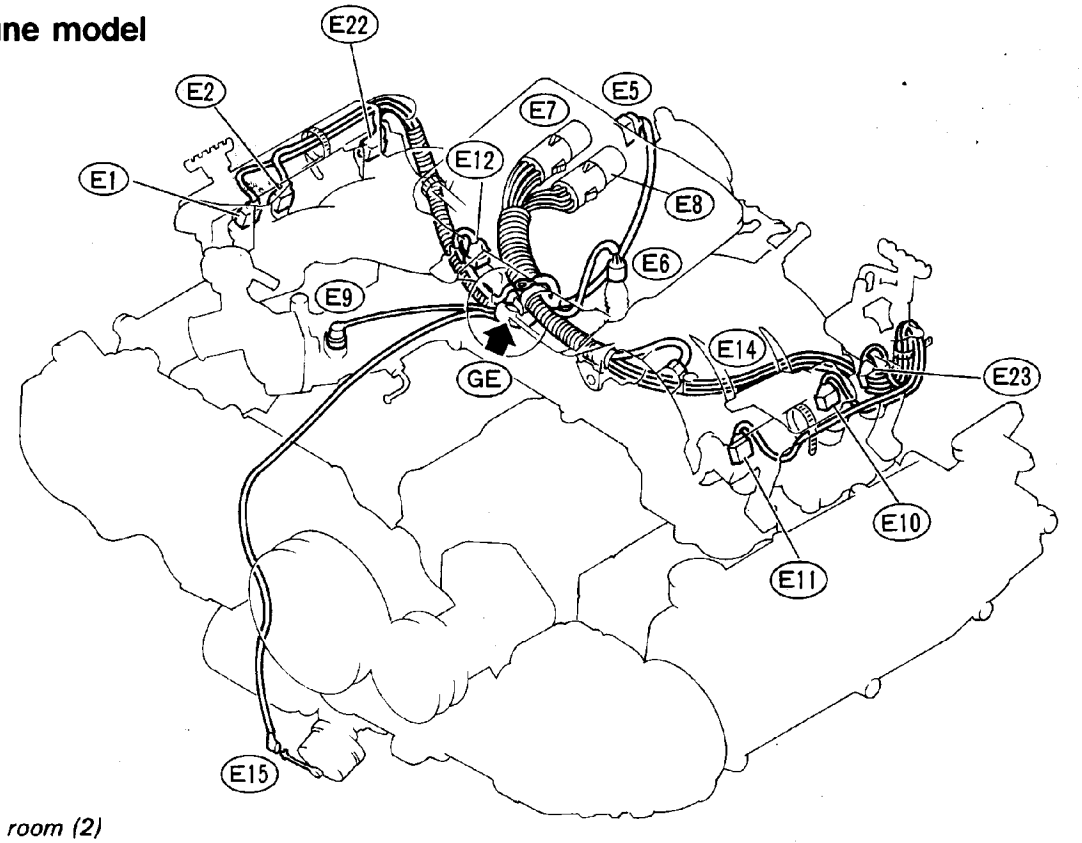

Fig. 11 Engine room (2)

L6-1698

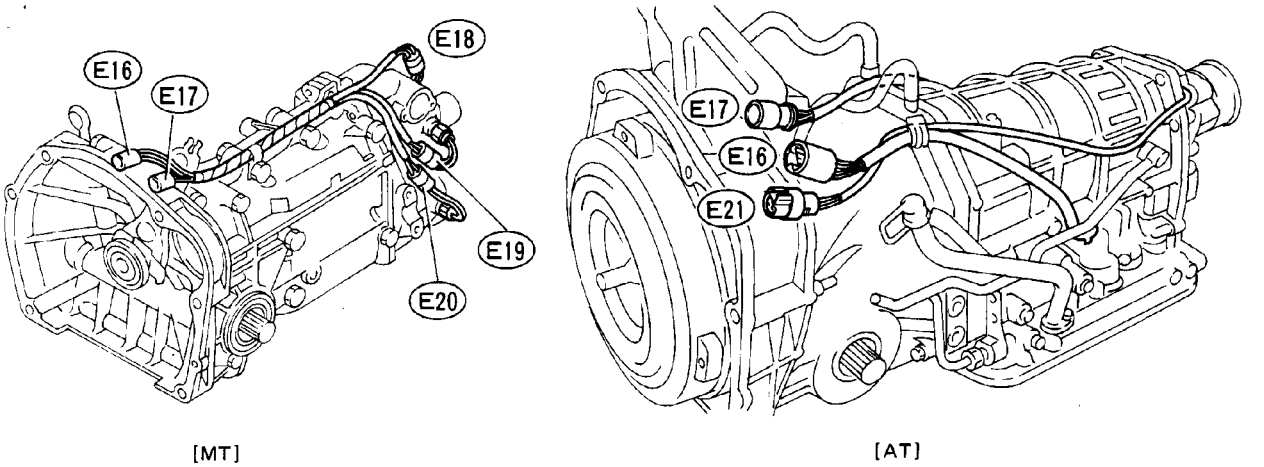

Fig. 12 Engine room (2)

L6-1699

Connector			Connecting to	
No.	Pole	Appearance	No.	Name
E1	2	Black		Fuel injector (No. 1)
E2	2	Black		Fuel injector (No. 3)
E3	2	Sky blue		Auxiliary air valve
E4	1	Black		FICD solenoid valve
E5	4	Black		Throttle sensor
E6	1			Knock sensor (2700)
E7	16	Black	F61	
E8	16		F60	Engine wiring harness (1800)
	12		F60	(2700)
E9	2			Temperature sensor
E10	2	Black		Fuel injector (No. 4)
E11	2	Black		Fuel injector (No. 2)
E12	2			Purge solenoid valve
E14	1			Thermometer
E15	1			Oil pressure switch or oil pressure gauge unit
E16	2	Black	F58	(MT)
	12	Black	F58	Engine wiring harness (AT)
E17	4		F57	(MT)
	12	Black	F57	(AT)
E18	2			4WD indicator switch or Diff. lock indicator switch
E19	2	Black		Neutral switch
E20	2			Back-up light switch
E21	3	Black	F56	Engine wiring harness (AT)
E22	2	Black		Fuel injector (No. 5)
E23	2	Black		Fuel injector (No. 6)

Instrument Panel Wiring Harness

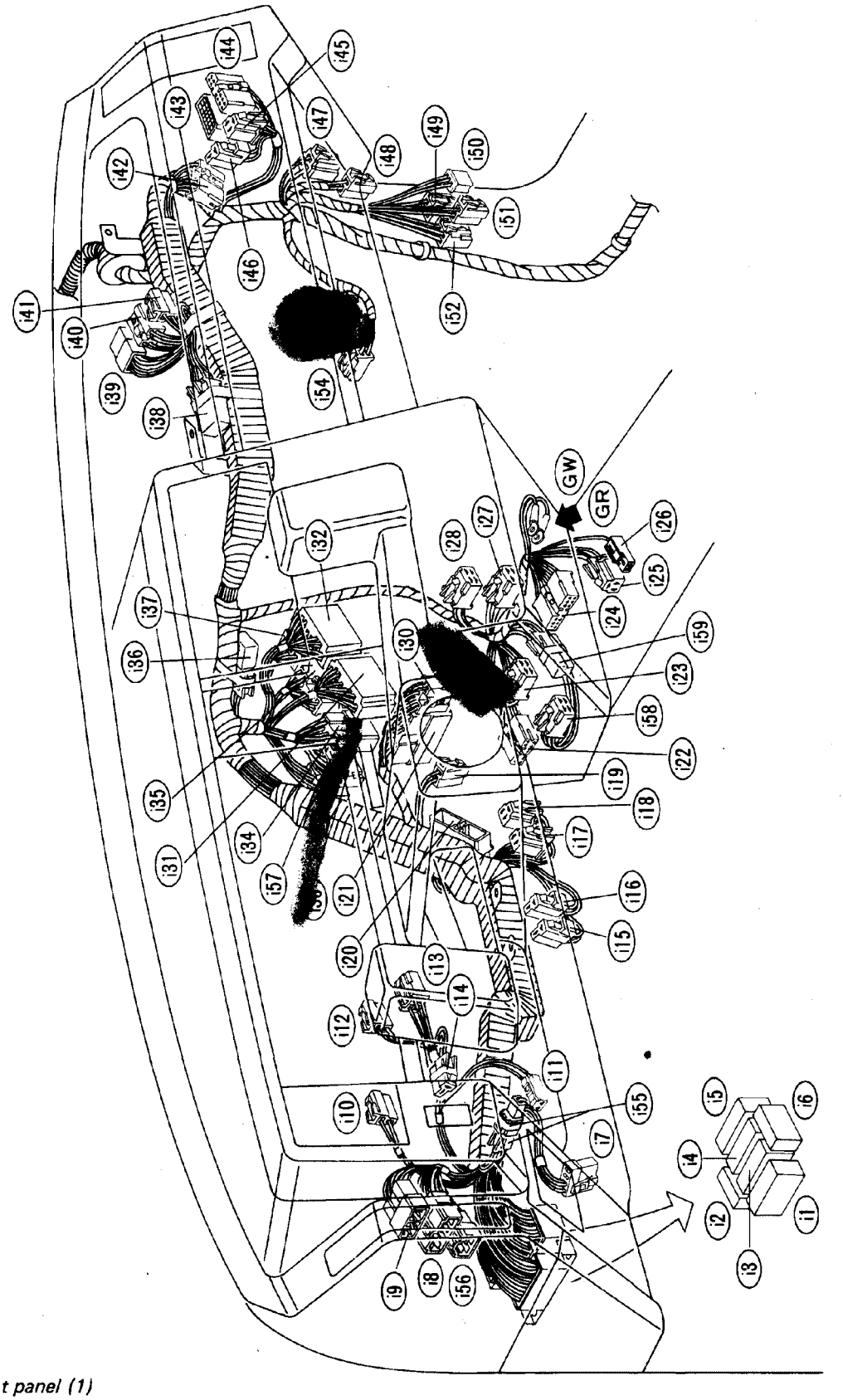

Fig. 13 Instrument panel (1)

L6-1700

Connector			Connecting to	
No.	Pole	Appearance	No.	Name
i 1	21		i 68	LH wiring harness
i 2	12	Black		Warning unit
i 3	21	Black	i 69	LH wiring harness
i 4	21	Blue		Combination meter
i 5	21	Brown		
i 6	12			
i 7	8	Yellow		Wiper select switch
i 8	8		i 85	LH wiring harness
i 9	9	Yellow	i 84	
	3		i 84	(Canada model)
i 10	2	Blue		Speed warning (Warning alarm)
i 11	2			(Warning switch)
i 12	2	Brown		Clutch switch (MT with cruise control)
i 13	4			Stop light switch (With cruise control)
i 14	2			
i 15	2	Blue		Option connector
i 16	2	Green		
i 17	3			
	3	Black		Cruise control sub-switch
i 18	3	Brown		Switch box
i 19	2			Air-conditioner switch
i 20	21			Switch box
i 21	21	Black		Mode control unit
i 22	9	Brown		Air conditioner MAX. unit
i 23	4	Black		Ignition relay
i 24	17	Blue		Wiper intermittent unit
i 25	3			Cigarette lighter illumination light
i 26	1	Black		Cigarette lighter
i 27	4	Brown		Fuel pump relay
i 28	4	Blue		Rear defogger relay
i 29	4			Blower motor relay
i 30	9			Mode actuator
i 31	~~21~~		~~R3~~	~~(1800 engine model)~~
	20		R3	Engine wiring harness (2700 engine model)
i 32	~~21~~	~~Green~~	~~R2~~	~~(1800 engine model)~~
	20	Black	R2	(2700 engine model)
i 33	8	Blue	R5	Floor wiring harness
i 34	~~21~~	Black	~~R4~~	~~(1800 engine AT model)~~
	9	Brown	R4	(2700 engine model)
i 35	11		R7	Engine wiring harness
	9		R7	
i 36	2			Diode (Air-conditioner)
i 37	6	Green	R1	Engine wiring harness
i 38	4			Diode (Air-conditioner/Ignition)
i 39	6	Black		Air conditioner amplifier
i 40	5			FRESH/CIRC actuator
i 41	2	Black		Air conditioner thermoswitch
i 42	7	Yellow		Option connector
i 43	21		i 102	Instrument wiring harness
i 44	11		i 105	
i 45	3		i 104	
i 46	2		i 103	
i 47	3	Red	P1	Power window main harness
i 48	2	Black		Front limit switch RH (Automatic seat belt) (SOA)
i 49	4	Green	P3	Door cord RH (Door lock)
i 50	3		P4	(Door switch) (SOA)
i 51	2	Red	P5	(Speaker)
i 52	4	Blue	P6	(Mirror)
i 53	2			Blower motor
i 54	4			Blower motor resistor
i 55	1 x 2	Blue		Junction (Automatic seat belt)
i 56	4		i 108	LH wiring harness
i 57	20	Black	R39	Floor wiring harness (AT)
i 58	4	Green		Front fog lamp relay
i 59	2			Diode (Front fog lamp)

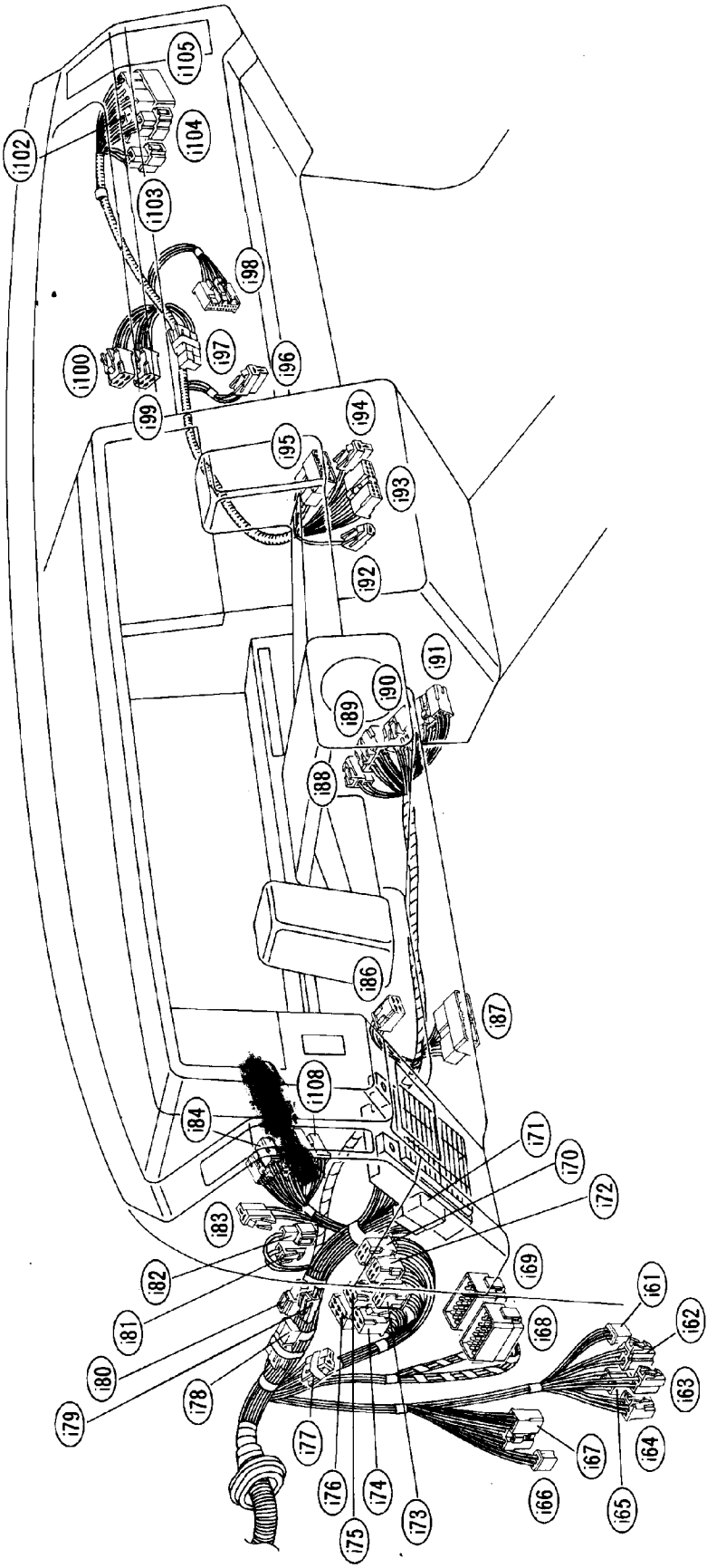

Fig. 14 Instrument panel (2)

L6-1701

Connector			Connecting to	
No.	Pole	Appearance	No.	Name
i 61	3		P16	Door cord LH (Door switch-seat belt)
i 62	3		P19	Door cord LH (Door lock)
i 63	2	Red	P20	Door cord LH (Speaker)
i 64	4		P18	Door cord LH (Mirror)
i 65	5		P17	Door cord LH (Mirror)
i 66	2	Black		Front limit switch LH
i 67	11		R11	Air suspension cord
i 68	21		i 1	RH wiring harness
i 69	21	Black	i 3	RH wiring harness
i 70	4	Blue		Trail light relay
i 71	10			Diode box
i 72	4			Lighting relay LH
i 73	4	Black		Lighting relay RH
i 74	4			Retractable headlight relay LH
i 75	4	Green		Retractable headlight relay RH
i 76	6	Yellow		Retractable headlight timer
i 77	2			(Option connector)
i 78	2			Diode (Retractable headlight) (2WD)
i 79	1	Black	i 80	Junction
i 80	1	Black	i 79	Junction
i 81	1		i 82	Junction (Clock)
i 82	1		i 81	Junction (Clock)
i 83	2	Red		Chime
i 84	9	Yellow	i 9	RH wiring harness (Canada model)
	3		i 9	RH wiring harness (Canada model)
i 85	8		i 8	RH wiring harness (Canada model)
i 86	4			Lighting switch
i 87	21	Black		Switch box
i 88	2	Black		Key warning switch
i 89	6	Black		Ignition switch
i 90	8			Combination switch
i 91	9			Combination switch
i 92	1			Option connector
i 93	13			Radio
i 94	2			Stereo illumination light
i 95	9	Yellow		Trip computer unit
	6			Clock
i 96	2	Brown		Glove box switch and light
i 97	2			Diode
i 98	20			Cruise control unit
i 99	4			Speaker relay LH
i 100	4			Speaker relay RH
i 102	21		i 43	RH wiring harness
i 103	2		i 46	RH wiring harness
i 104	3		i 45	RH wiring harness
i 105	11		i 44	RH wiring harness
i 108	4		i 56	RH wiring harness (2700 engine model)

Rear Wiring Harness

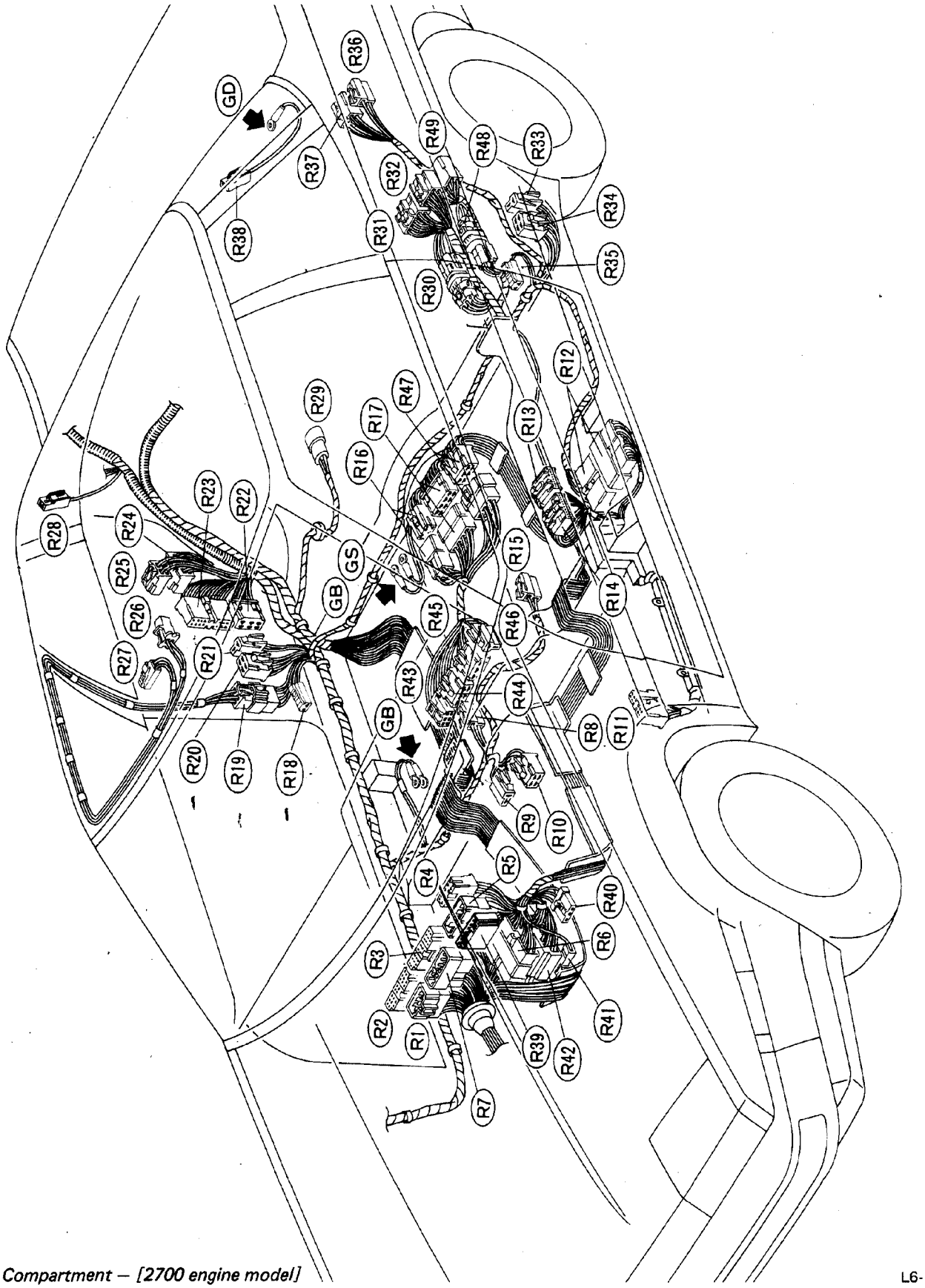

Fig. 15 Compartment – [2700 engine model]

L6-1702

Connector			Connecting to	
No.	Pole	Appearance	No.	Name
R1	6	Green	i37	RH wiring harness
R2	20	Black	i32	
R3	20		i31	
R4	9	Brown	i34	
R5	8	Blue	i33	
R6	13	Green		Floor wiring harness ↔ Engine wiring harness
R7	9		i35	RH wiring harness
R8	2			Parking brake switch
~~R9~~	~~2~~	~~Blue~~		AT indictor light
~~R10~~	~~4~~			1 hold switch (AT)
R11	11		i67	LH wiring harness
R12	21			Air suspension cord ↔ RH wiring harness
R13	16	Black		Height control unit
R14	20	Black		
R15	2			Lap bet switch
R16	5			Floor wiring harness ↔ Console cord (MT)
R17	8			
R18	2			Door switch RH
R19	4	Green		Room & spot light cord ↔ RH wiring harness
R20	4			Rear limit switch RH
R21	2			Automatic seat belt motor RH
R22	6			Automatic seat belt control unit
R23	17			
R24	6	Blue		Headlight washer unit
R25	4			Air conditioner cut relay
R26	2			Room & spot light
R27	2			Vanity mirror light
R28	1	Black		Rear defogger
R29	2			Fuel pump
R30	5			Junction (AT)
R31	20			AT control unit
R32	16			
R33	2			Automatic seat belt motor LH
R34	4			Rear limit switch LH
R35	2			Door switch LH
R36	2			Solenoid valve (Air suspension)
R37	5			Height sensor (Air suspension)
R38	1	Black		Rear defogger
R39	20	Black	i57	RH wiring harness (AT)
R40	3	Green		Steering sensor
R41	1	Brown		Floor wiring harness ↔ Engine wiring harness (AT)
R42	20	Brown		
R43	6			Diff. lock switch (Full-time 4WD)
R44	6			Blower switch
R45	6	Brown		Front fog lamp switch
R46	2			Switch illumination light
R47	6			Floor wiring harness ↔ Console cord
R48	4			Junction
R49	17			MPS controller

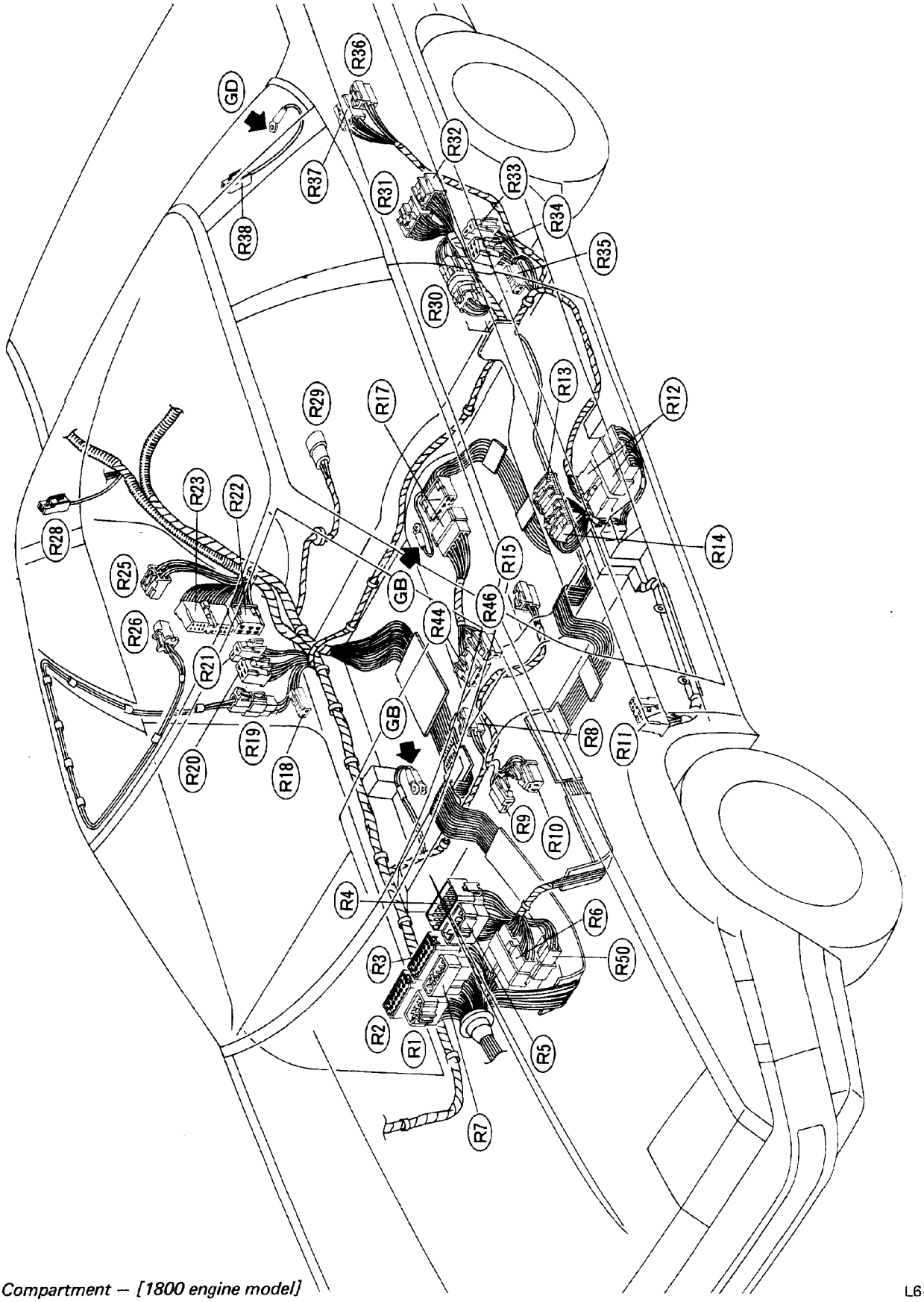

Fig. 16 Compartment – [1800 engine model]

L6-1703

Connector			Connecting to	
No.	Pole	Appearance	No.	Name
R1	6	Green	i37	RH wiring harness (AT)
R2	21	Green	i32	
R3	21		i31	
R4	21	Black	i34	
R5	8	Blue	i33	
R6	21			Floor wiring harness ↔ Engine wiring harness (AT)
R7	11		i35	RH wiring harness
R8	2			Parking brake switch
R9	2	Blue		AT indicator light
R10	3			4WD selector switch (MT)
	4			1 hold switch (AT)
R11	11		i67	LH wiring harness
R12	21			Air suspension cord ↔ RH wiring harness
R13	16	Black		Height control unit
R14	20	Black		
R15	2			Lap bet switch
R17	8			Floor wiring harness → Console cord
R18	2			Door switch RH
R19	4	Green		Room & spot light cord ↔ RH wiring harness
R20	4			Rear limit switch RH
R21	2			Automatic seat belt motor RH
R22	6			Automatic seat belt control unit
R23	17			
R25	4			Air conditioner cut relay
R26	2			Room & spot light
R28	1	Black		Rear defogger
R29	2			Fuel pump
R30	5			Junction (AT)
R31	20			AT control unit
R32	16			
R33	2			Automatic seat belt motor LH
R34	4			Rear limit switch LH
R35	2			Door switch LH
R36	2			Solenoid valve (Air suspension)
R37	5			Height sensor (Air suspension)
R38	1	Black		Rear defogger
R44	6			Blower switch
R46	2			Switch illumination light
R50	5			Floor wiring harness ↔ Engine wiring harness (AT)

Rear End Wiring Harness

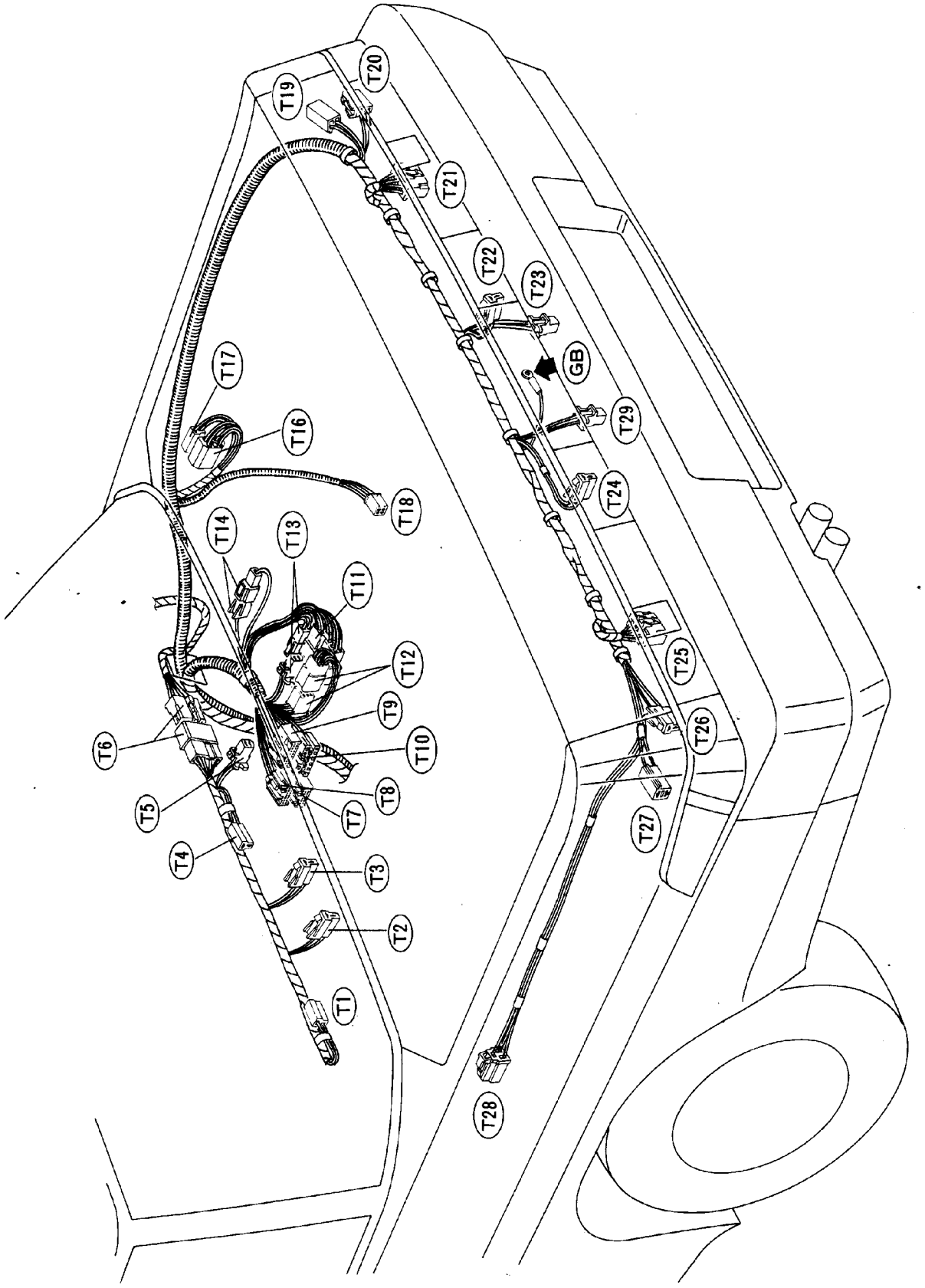

Fig. 17 Trunk room

L6-1704

Connector			Connecting to	
No.	Pole	Appearance	No.	Name
T1	2	Black		Speaker LH
T2	2	Brown		High-mount stop light
T3	2			Truck room light
T4	2	Black		Speaker RH
T5	2			Trunk room light switch
T6	7			Trunk room cord ↔ RH wiring harness
T7	12			MPFI control unit
T8	16			
T9	20			
T10	15			
T11	13			Check connector (Line end)
T12	9			Junction (1800 engine model)
	8			Junction (2700 engine model)
T13	2 x 2	Green		(Test mode connector)
T14	1 x 2	Black		(Read memory connector)
T16	5			Height sensor (Air suspension)
T17	2			Solenoid valve RH (Air suspension)
T18	4			Fuel gauge unit
T19	2	Black		Side marker light RH
T20	2			Turn signal light RH
T21	6			Rear combination light RH
T22	2			Back-up light RH
T23	2	Black		License light RH
T24	2			Back-up light LH
T25	6			Rear combination light LH
T26	2			Turn signal light LH
T27	2	Black		Side marker light LH
T28	3			Auto antenna unit
T29	2			License light LH

Power Window Main Harness and Door Cord

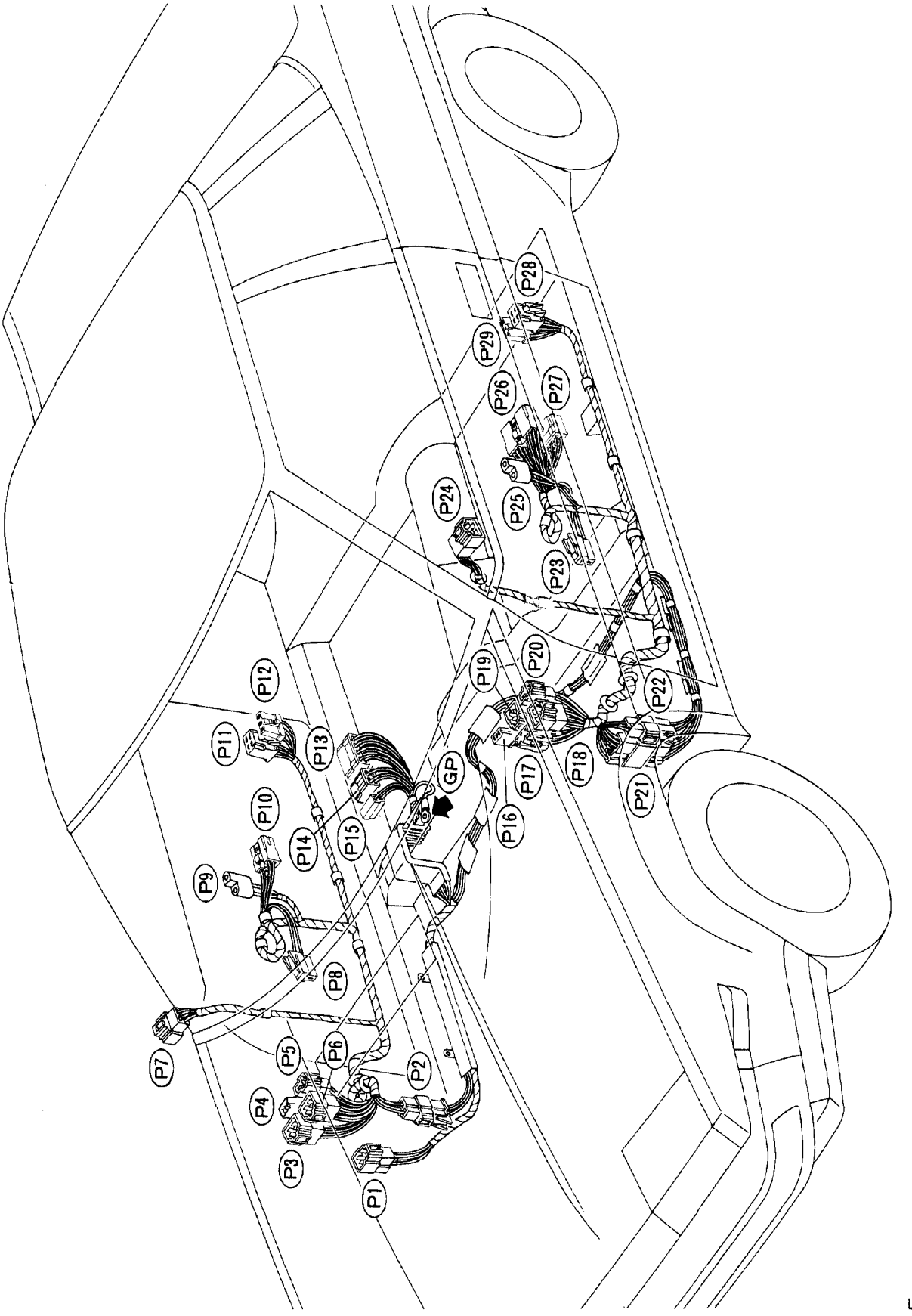

Fig. 18

L6-1705

Connector			Connecting to	
No.	Pole	Appearance	No.	Name
P1	3	Pink	i47	RH wiring harness
P2	3			Door cord RH ↔ Power window main harness
P3	4	Green	i49	(Door lock)
P4	3		i50	(Door switch—Seat belt)
P5	2	Pink	i51	(Speaker)
P6	4	Blue	i52	(Mirror)
P7	4			Remote controlled rearview mirror RH
P8	2			Door speaker RH
P9	2			Power window motor RH
P10	5			Power window sub-switch
P11	4			Door lock actuator RH
P12	3			Door switch (Seat belt)
P13	8			Power window control unit
P14	4			Power window relay
P15	2			Power window breaker
P16	3		i61	(Door switch—Seat belt)
P17	5		i65	(Motor)
P18	4		i64	(Mirror)
P19	3		i62	(Door lock)
P20	2	Pink	i63	(Speaker)
P21	7			Power window main harness ↔ Door cord LH
P22	2			
P23	2			Door speaker RH
P24	4			Remote controlled rearview mirror LH
P25	2			Power window motor LH
P26	11			Remote controlled rearview mirror switch
P27	8			Power window main switch
P28	4			Door lock actuator LH
P29	3			Door switch (Seat belt)

Common Grounding

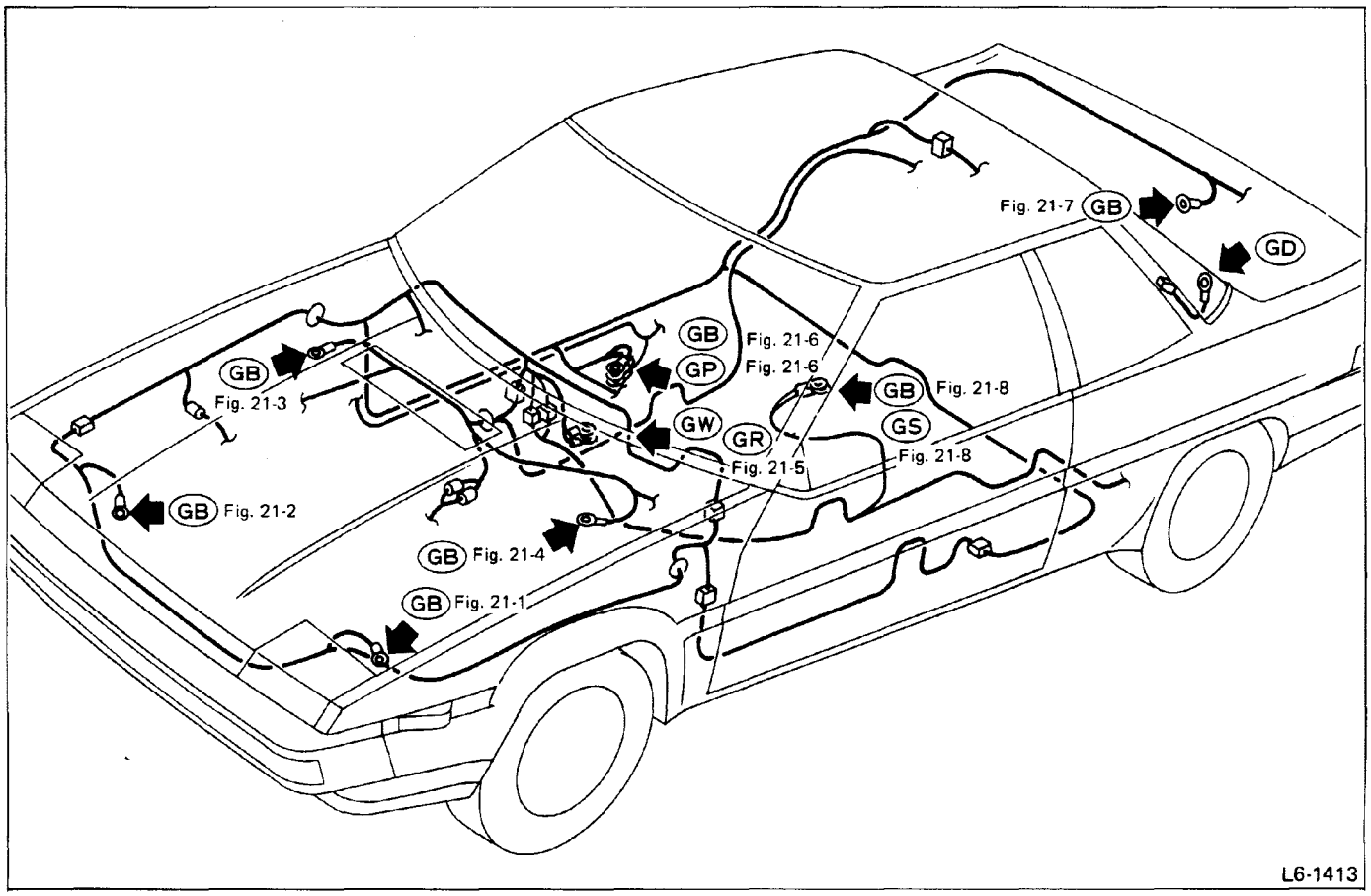

Fig. 19

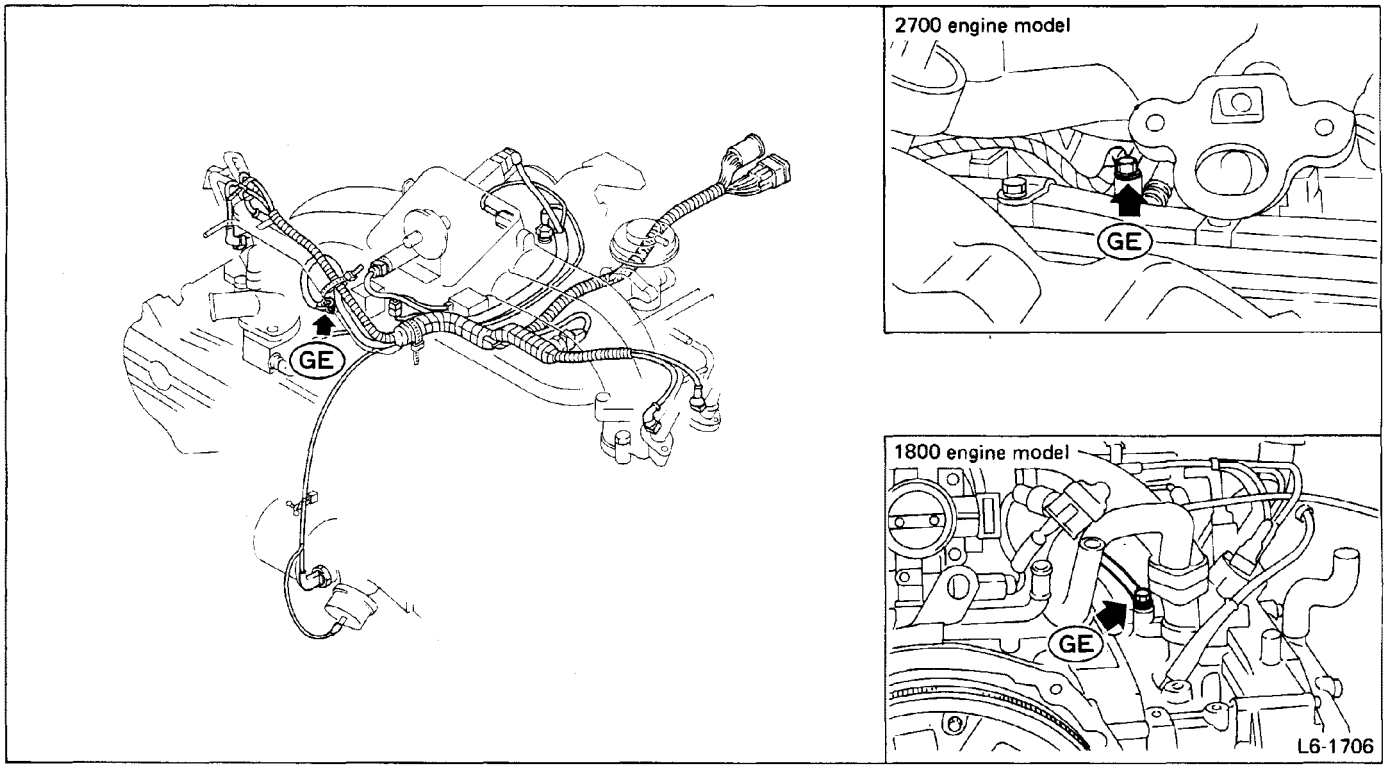

Fig. 20

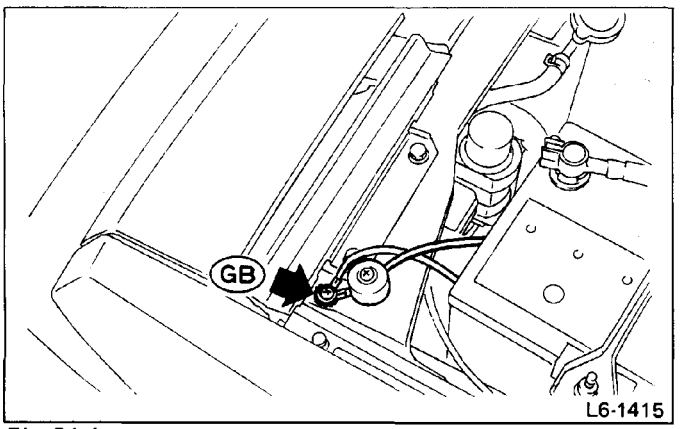

Fig. 21-1

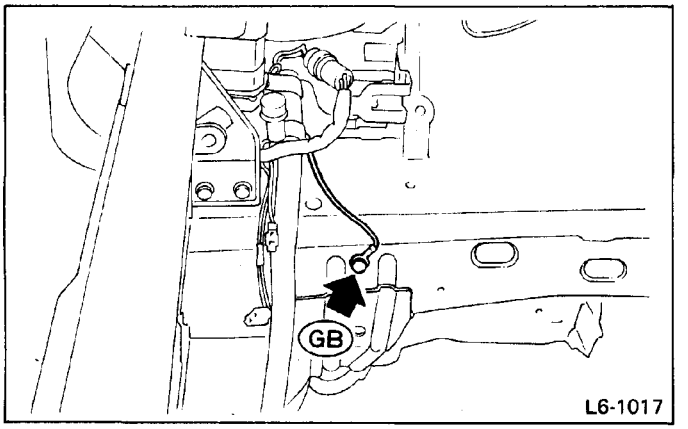

Fig. 21-2

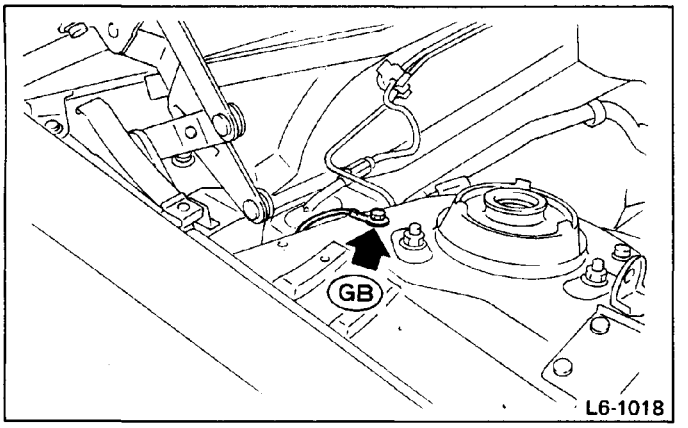

Fig. 21-3

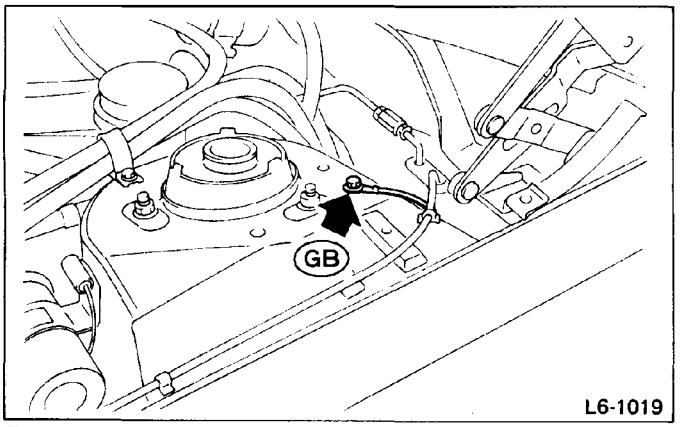

Fig. 21-4

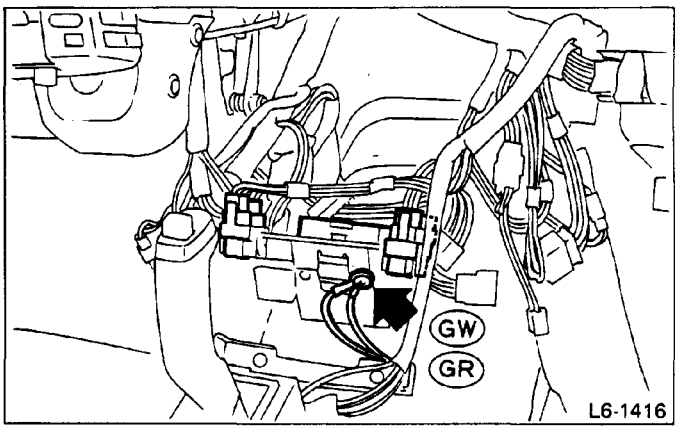

Fig. 21-5

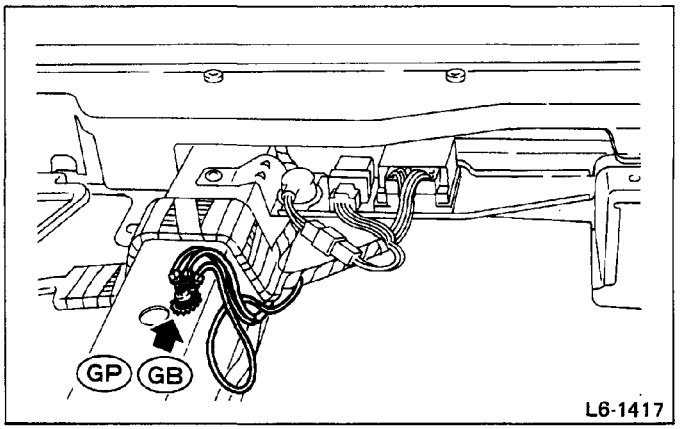

Fig. 21-6

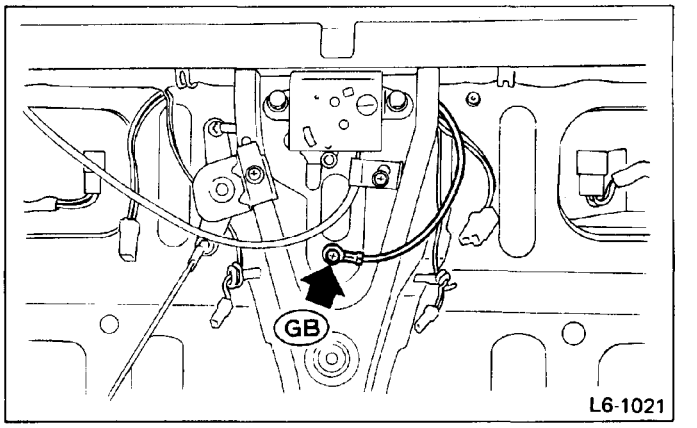

Fig. 21-7

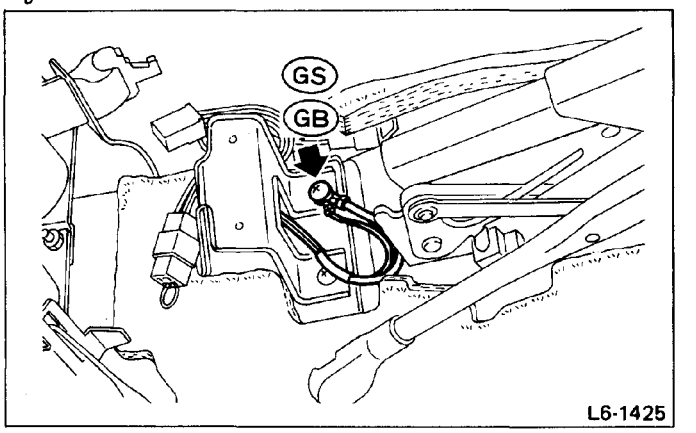

Fig. 21-8

ELECTRICAL UNIT LOCATION

Air conditioner amplifier	Inside of instrument panel	(Fig. 25-2)
Air conditioner cut relay	Inside of RH quarter panel	(Fig. 27-1)
Air conditioner fuse	Attached to RH wheel apron (1800 engine model)	(Fig. 23-3)
	Attached to RH wheel apron (2700 engine model)	(Fig. 24-3)
Air conditioner MAX. unit	Inside of instrument panel	(Fig. 25-6)
Air conditioner relay	Attached to RH wheel apron (1800 engine model)	(Fig. 23-3)
	Attached to RH wheel apron (2700 engine model)	(Fig. 24-3)
Air flow meter	On RH wheel apron	(Fig. 23-3)
AT duty solenoid	Inside of transmission case	(Fig. 23-6)
AT fluid temperature sensor	Inside of transmission case	(Fig. 23-6)
AT shift solenoid	Inside of transmission case	(Fig. 23-6)
Automatic seat belt control unit	Inside of RH quarter panel	(Fig. 27-1)
Automatic seat belt motor	Inside of each quarter panel	(Fig. 27-1) (Fig. 27-5)
Automatic transmission control unit	Inside of LH quarter panel	(Fig. 27-5)
Auxiliary air valve (1800 engine model)	On intake manifold	(Fig. 22-1)
Back-up light switch	Attached to transmission case	
Blower motor	Under instrument panel	(Fig. 25-2)
Blower relay	Inside of instrument panel	(Fig. 25-6)
Brake fluid level sensor	Incorporated in brake fluid tank	
By-pass air control (2700 engine model)	Attached to intake manifold	(Fig. 24-5)
Car-speed switch	Incorporated in combination meter	
Chime	Inside of instrument panel	(Fig. 26-4)
Clutch switch	On pedal bracket	
Cruise control actuator	Attached to RH strut tower (1800 engine model)	(Fig. 23-3)
	Attached to toe board (2700 engine model)	(Fig. 24-1)
Cruise control unit	Inside of instrument panel	(Fig. 25-1)
Cruise control vacuum pump	Attached to RH strut tower	(Fig. 23-3)
Diff. lock solenoid	Attached to toe board	(Fig. 23-2)
FICD solenoid valve	Attached to throttle body on intake manifold	(Fig. 22-4)
Front fog lamp fuse	Attached to RH wheel apron	(Fig. 24-3)
Front fog lamp relay	Inside of instrument panel	
FWD switch (4WD-AT)	Attached to LH strut tower	(Fig. 22-8)
4WD/FWD solenoid valve (MT)	Attached to toe board	(Fig. 23-2)
Fuel gauge unit	Attached to fuel tank	(Fig. 27-7)
Fuel injector	On each side of cylinder head	
Fuel pump	Under body floor	(Fig. 27-2)
Fuel pump relay	Inside of instrument panel	(Fig. 25-6)
Fusible link	In front of LH strut tower (1800 engine model)	(Fig. 22-8)
	In front of LH strut tower (2700 engine model)	(Fig. 24-7)
Headlight washer pump	Inside of RH wheel apron	(Fig. 22-3)
Headlight washer unit	Inside of RH quarter panel	(Fig. 27-1)
Ignition coil	In front of LH strut tower	(Fig. 22-8)
Ignition relay	Inside of instrument panel	(Fig. 25-6)
Illumination control unit	Incorporated in control wing	(Fig. 26-1)
Inhibitor switch	Attached to transmission case	(Fig. 22-2)
Key warning switch	Incorporated in ignition switch	
Knock sensor (2700 engine model)	On rear end of engine	(Fig. 22-1)
Lighting relay	Inside of instrument panel	(Fig. 25-4)
Main fan motor	Attached to radiator panel	
Main fan relay	Attached to RH wheel apron (1800 engine model)	(Fig. 23-3)
	Attached to RH wheel apron (2700 engine model)	(Fig. 24-3)
Mode control actuator	Inside of instrument panel	(Fig. 22-6)

Mode control unit	Inside of instrument panel	(Fig. 26-3)
Motor pump ASSY	Attached to toe board	(Fig. 24-2)
MPFI control unit	In the trunk room	(Fig. 27-6)
MPS controller	Attached to LH quarter panel	(Fig. 27-5)
MPS heater relay	Attached to motor pump bracket	(Fig. 24-2)
O_2 sensor	Attached to exhaust pipe	(Fig. 23-1)
Oil pressure switch	Attached to oil pump	
Oil pressure unit	Attached to oil pump	(Fig. 22-6)
Outside temperature sensor	Inside of RH wheel apron	(Fig. 24-4)
Parking brake switch	Base of parking brake lever	(Fig. 25-7)
Pneumatic suspension air charge solenoid	Inside of LH wheel apron	(Fig. 23-7)
Pneumatic suspension compressor	Inside of LH wheel apron	(Fig. 23-7)
Pneumatic suspension control unit	Under driver's seat	(Fig. 27-4)
Pneumatic suspension drier	Inside of LH wheel apron	(Fig. 23-7)
Pneumatic suspension pressure switch	Inside of LH wheel apron	(Fig. 23-7)
Pneumatic suspension relay	Attached to LH strut tower	(Fig. 23-8)
Pneumatic suspension solenoid valve	Attached to each air suspension ASSY	(Fig. 23-8)
Power controller (MPS)	Attached to toe board	(Fig. 24-2)
Power window breaker	Under front passenger's seat	(Fig. 27-3)
Power window control unit	Under front passenger's seat	(Fig. 27-3)
Power window relay	Under front passenger's seat	(Fig. 27-3)
Pulser amplifier	Inside of instrument panel	
Pulser coil	Attached to compressor (A/C)	(Fig. 23-5)
Rear defogger relay	Inside of instrument panel	(Fig. 25-6)
Rear revolution sensor (AT)	Attached to transmission case	(Fig. 22-7)
Resistor (AT control)	Attached to RH strut tower	
Resistor (Blower)	Attached to blower motor unit	
Resistor (Engine control)	Attached to RH strut tower	
Retractable headlight motor	Attached to radiator panel	(Fig. 23-4)
Retractable headlight relay	Inside of instrument panel	(Fig. 25-4)
Retractable headlight timer	Inside of instrument panel	(Fig. 25-5)
Seat belt timer	Incorporated in combination meter	
Speed warning buzzer	Inside of instrument panel	(Fig. 26-4)
Steering sensor	Attached to steering column	(Fig. 26-5)
Stop light checker	Incorporated in rear combination light	(Fig. 27-8)
Sub-fan motor	Attached to radiator panel	(Fig. 24-6)
Sub-fan relay	Attached to RH wheel apron	(Fig. 24-3)
Tail light relay	Inside of instrument panel	(Fig. 25-4)
Temperature sensor (MPS)	Attached to toe board	(Fig. 24-2)
Thermoswitch	Attached to radiator	(Fig. 22-5)
Throttle sensor	Attached to throttle body (1800 engine model)	(Fig. 22-4)
	Attached to throttle body (2700 engine model)	(Fig. 24-5)
Trip computer circuit unit	Inside of instrument panel	(Fig. 26-2)
Turn signal & hazard unit	Incorporated in combination switch	
Windshield washer pump	Inside of RH wheel apron	(Fig. 22-3)
Wiper intermittent unit	Inside of instrument panel	(Fig. 26-7)

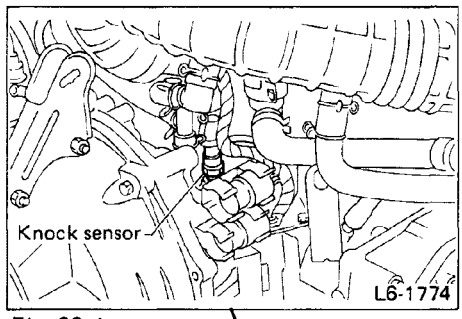

Fig. 22-1

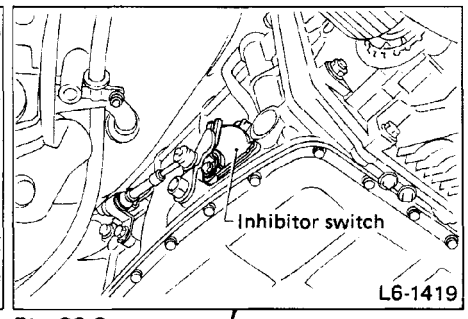

Fig. 22-2

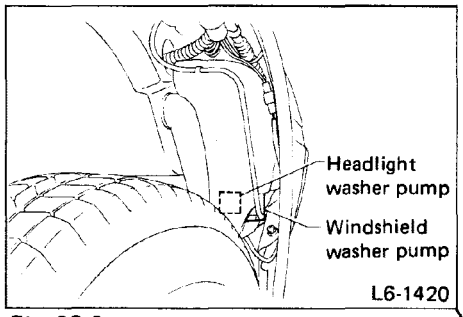

Fig. 22-3

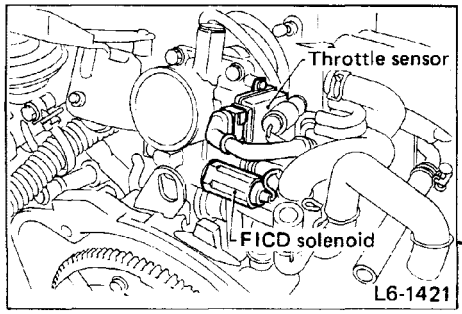

Fig. 22-4

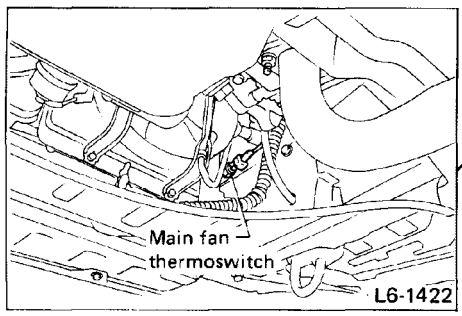

Fig. 22-5

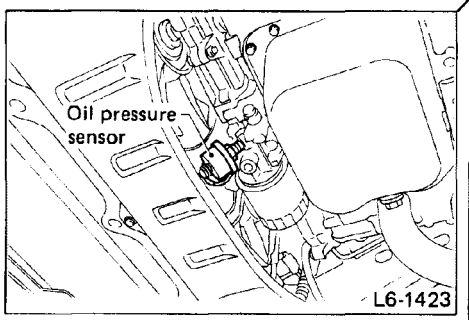

Fig. 22-6

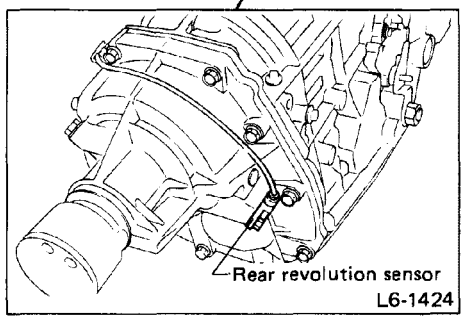

Fig. 22-7

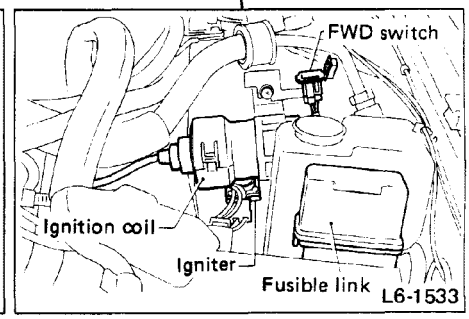

Fig. 22-8

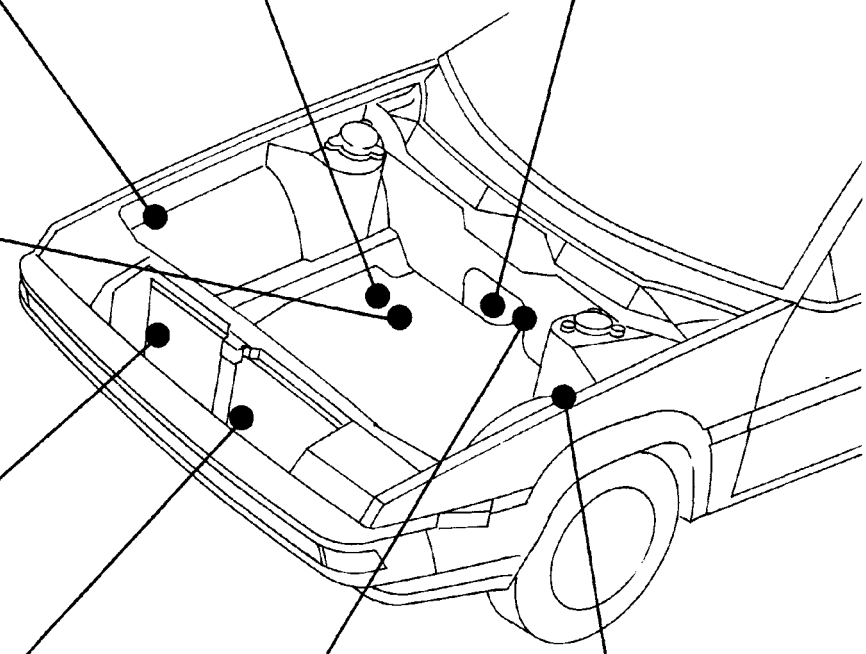

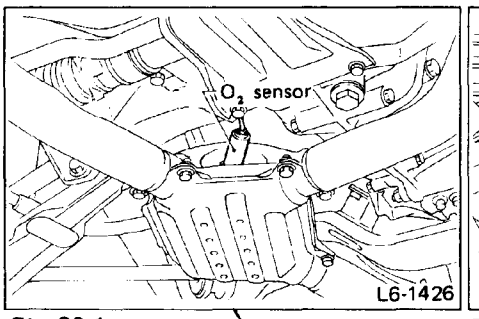

Fig. 23-1

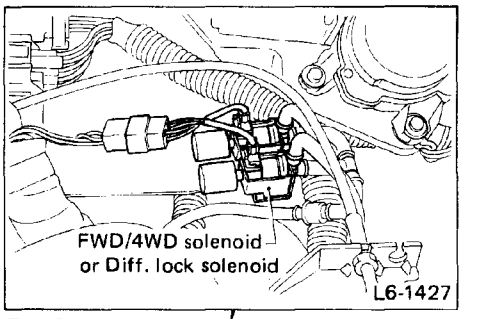

Fig. 23-2

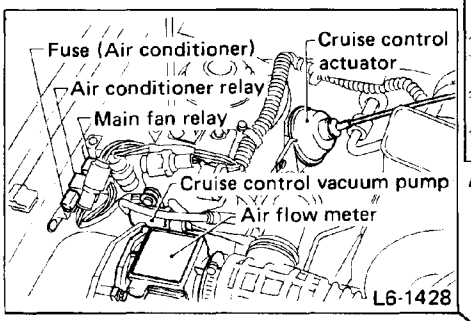

Fig. 23-3

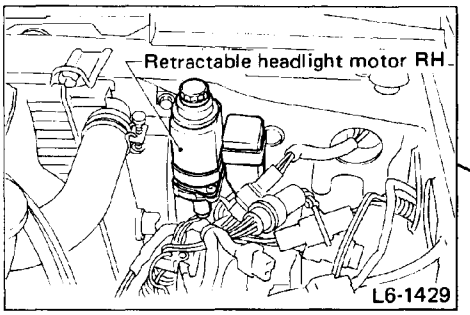

Fig. 23-4

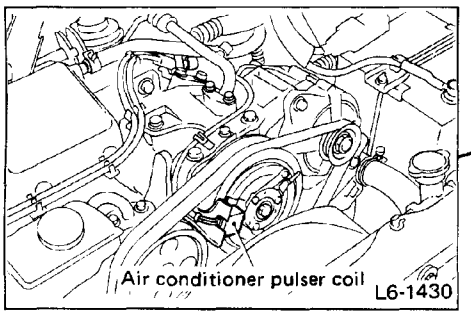

Fig. 23-5

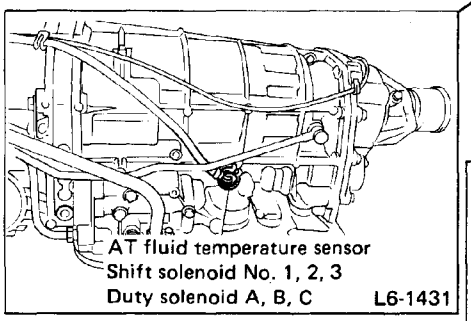

Fig. 23-6

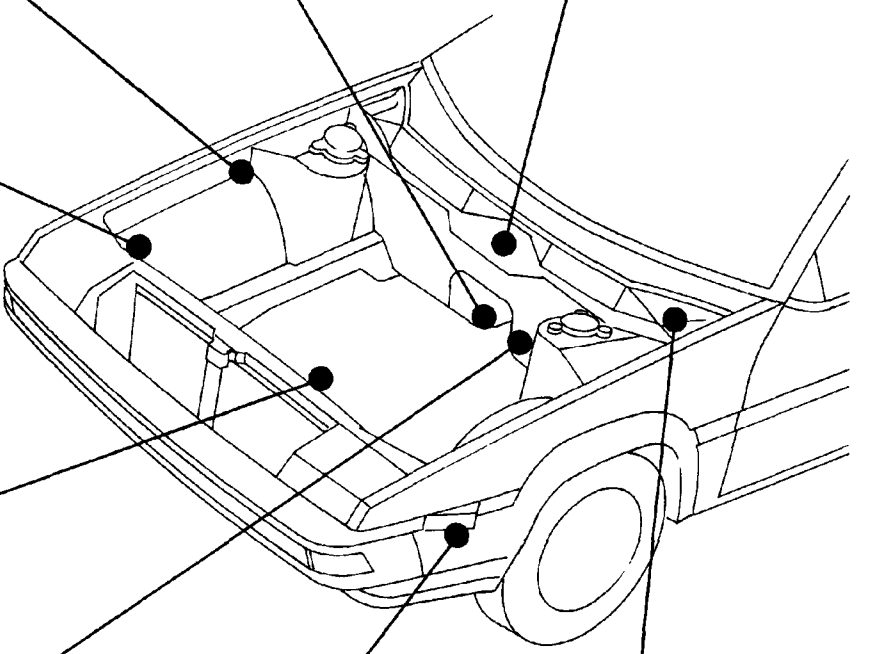

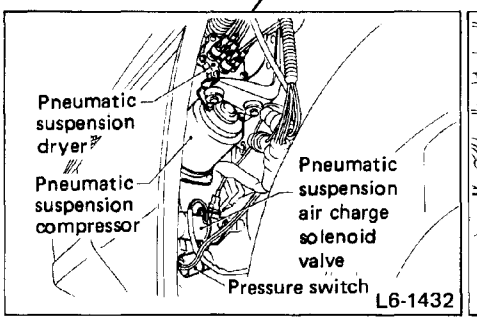

Fig. 23-7

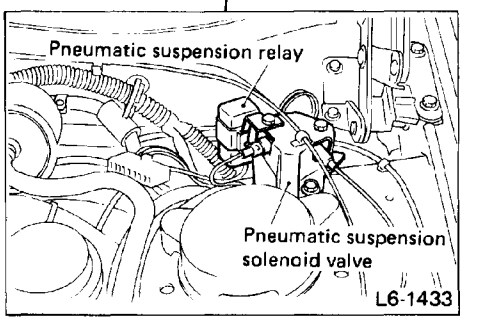

Fig. 23-8

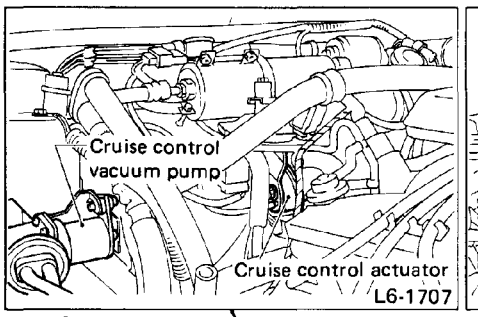

Fig. 24-1

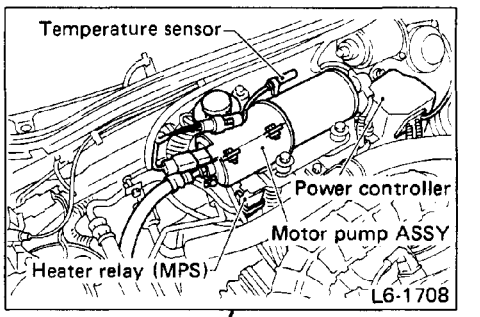

Fig. 24-2

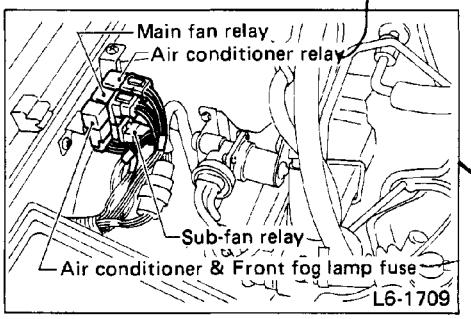

Fig. 24-3

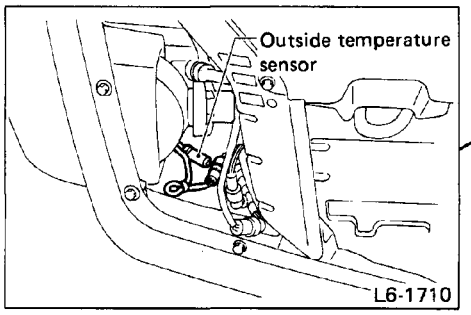

Fig. 24-4

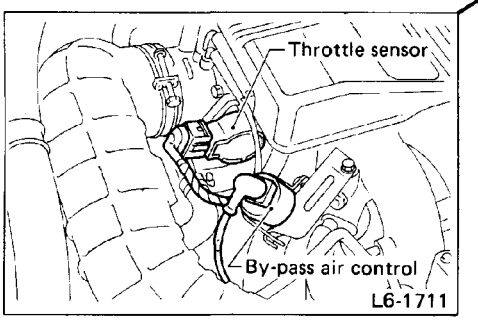

Fig. 24-5

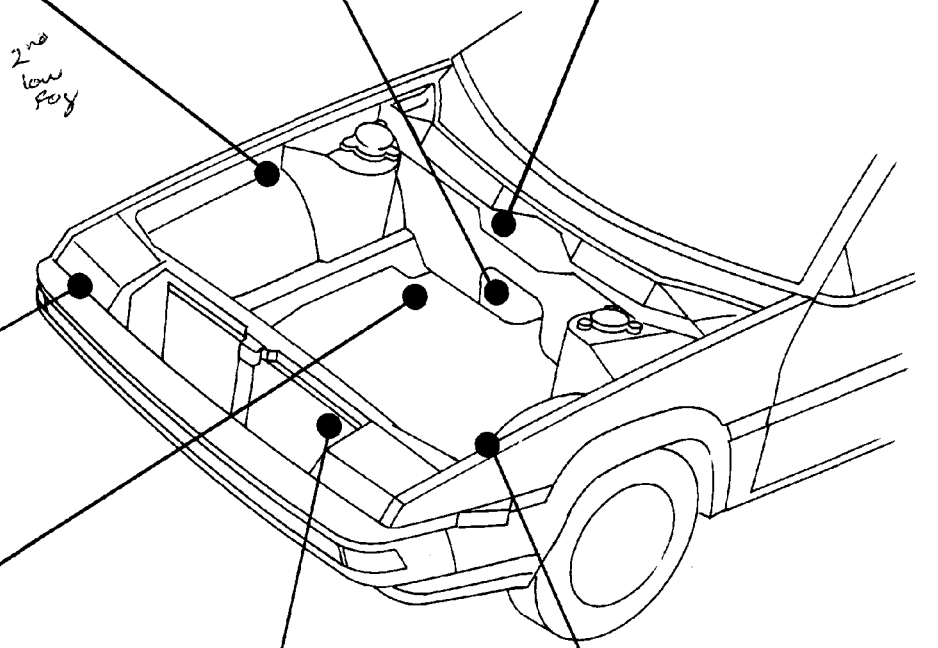

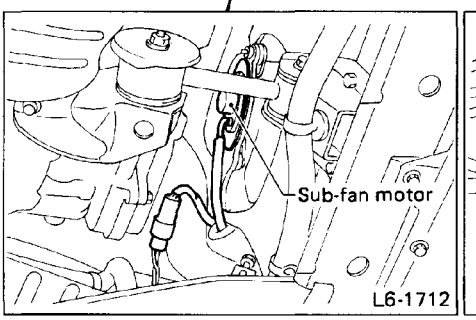

Fig. 24-6

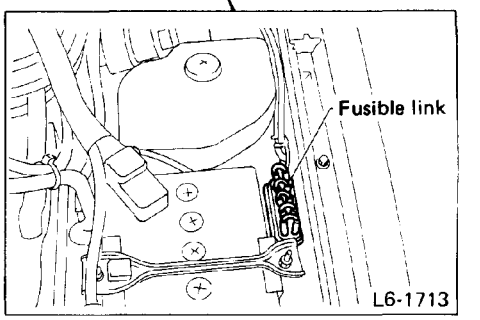

Fig. 24-7

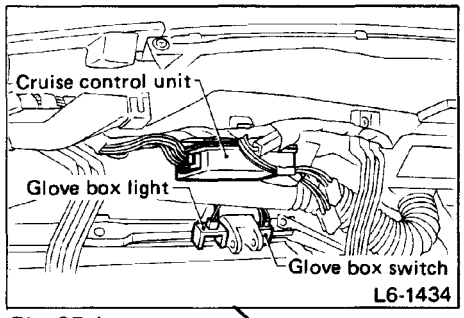

Fig. 25-1

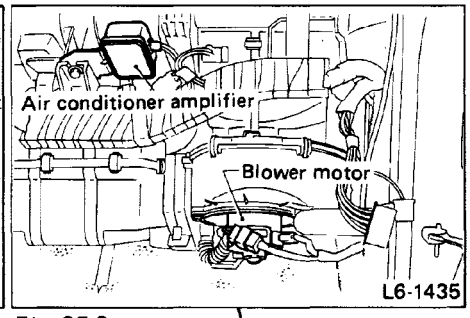

Fig. 25-2

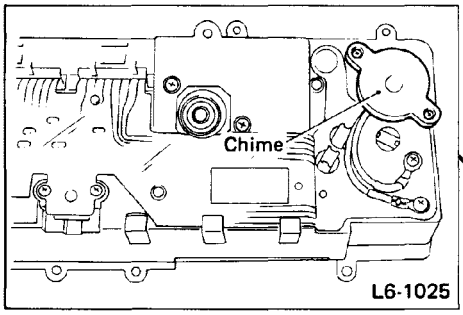

Fig. 25-3

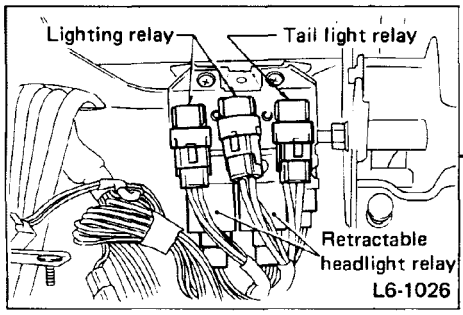

Fig. 25-4

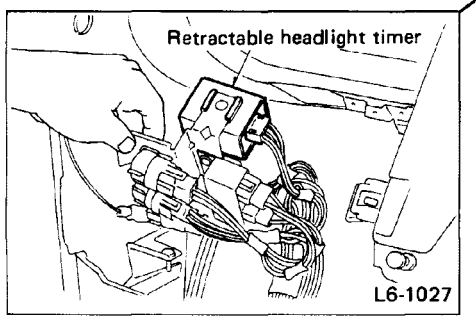

Fig. 25-5

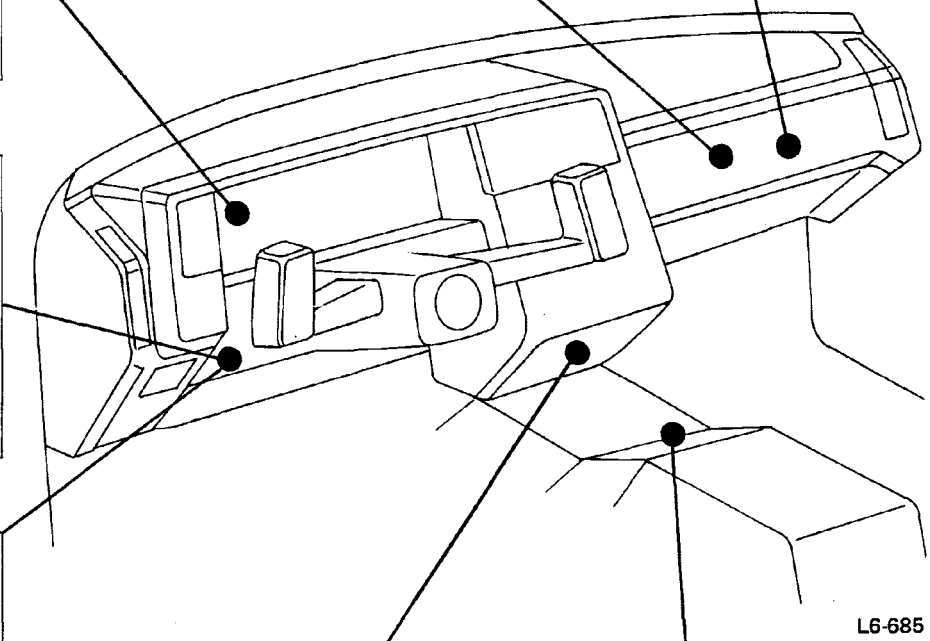

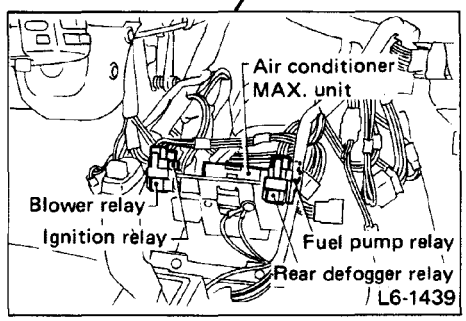

Fig. 25-6

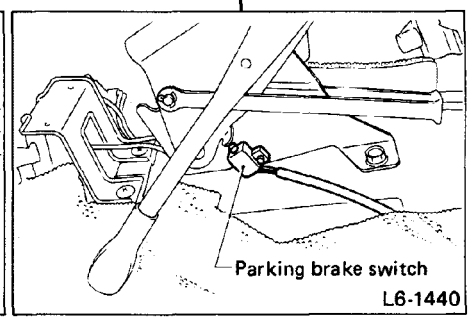

Fig. 25-7

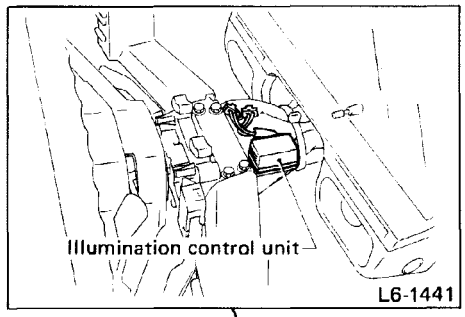

Fig. 26-1

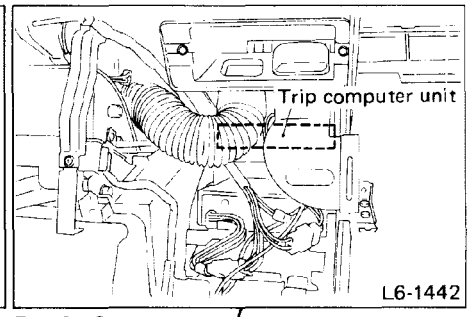

Fig. 26-2

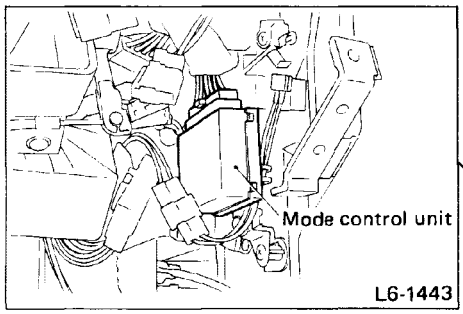

Fig. 26-3

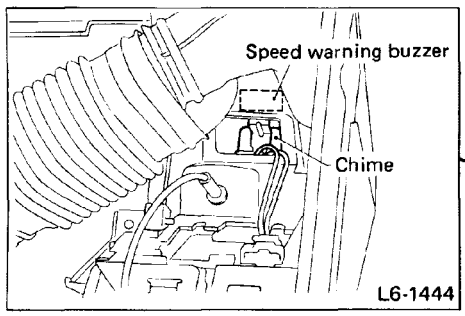

Fig. 26-4

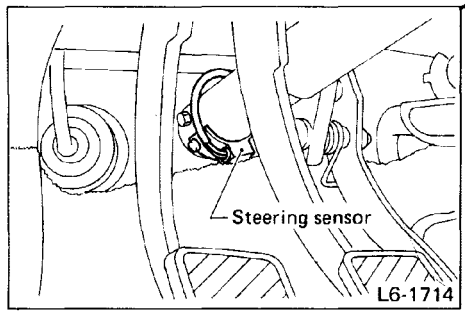

Fig. 26-5

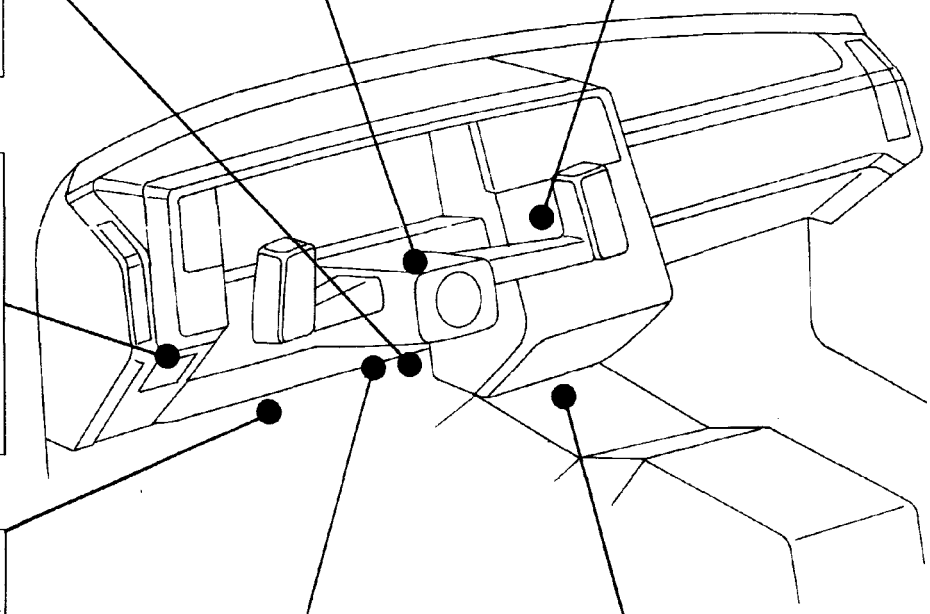

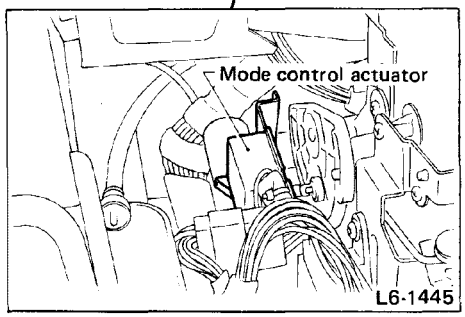

Fig. 26-6

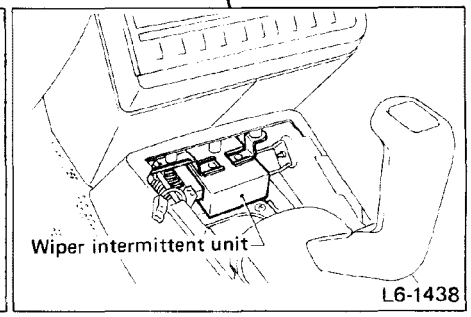

Fig. 26-7

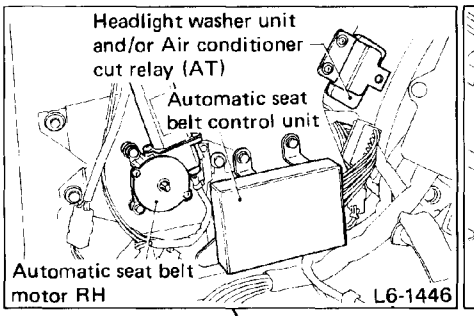

Fig. 27-1

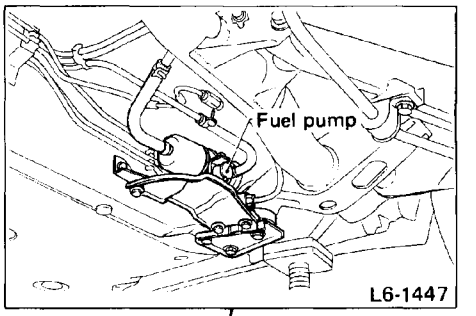

Fig. 27-2

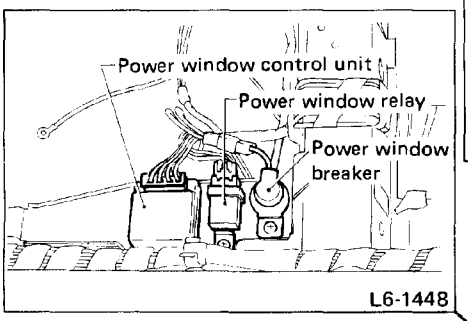

Fig. 27-3

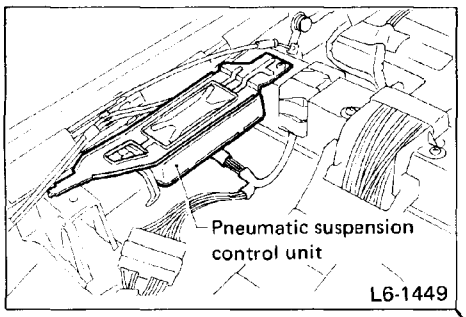

Fig. 27-4

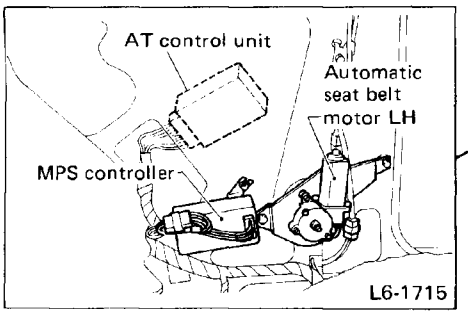

Fig. 27-5

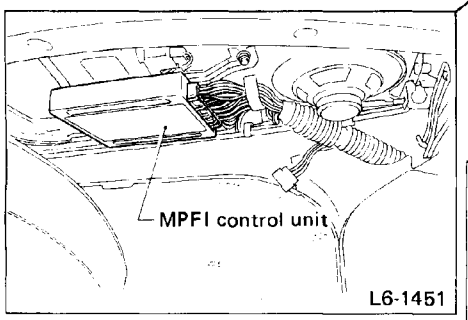

Fig. 27-6

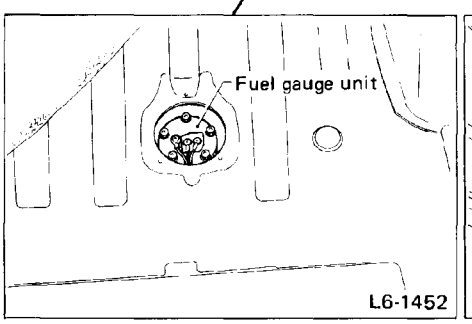

Fig. 27-7

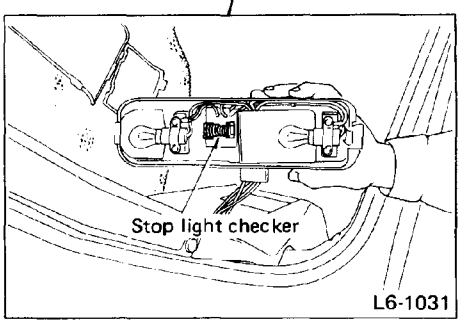

Fig. 27-8

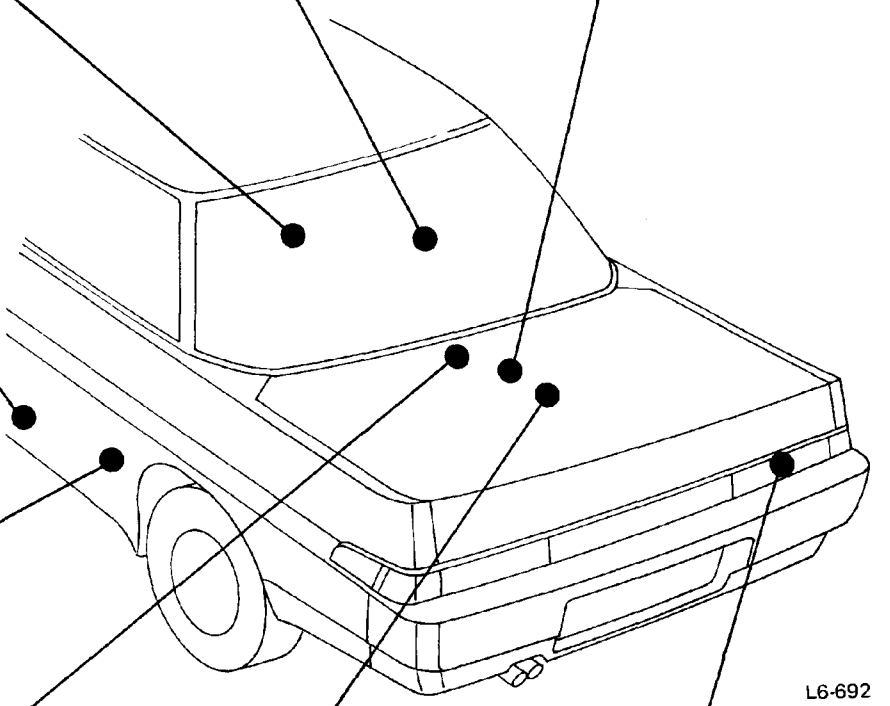

WIRING DIAGRAM AND TROUBLESHOOTING

Power Supply Routing

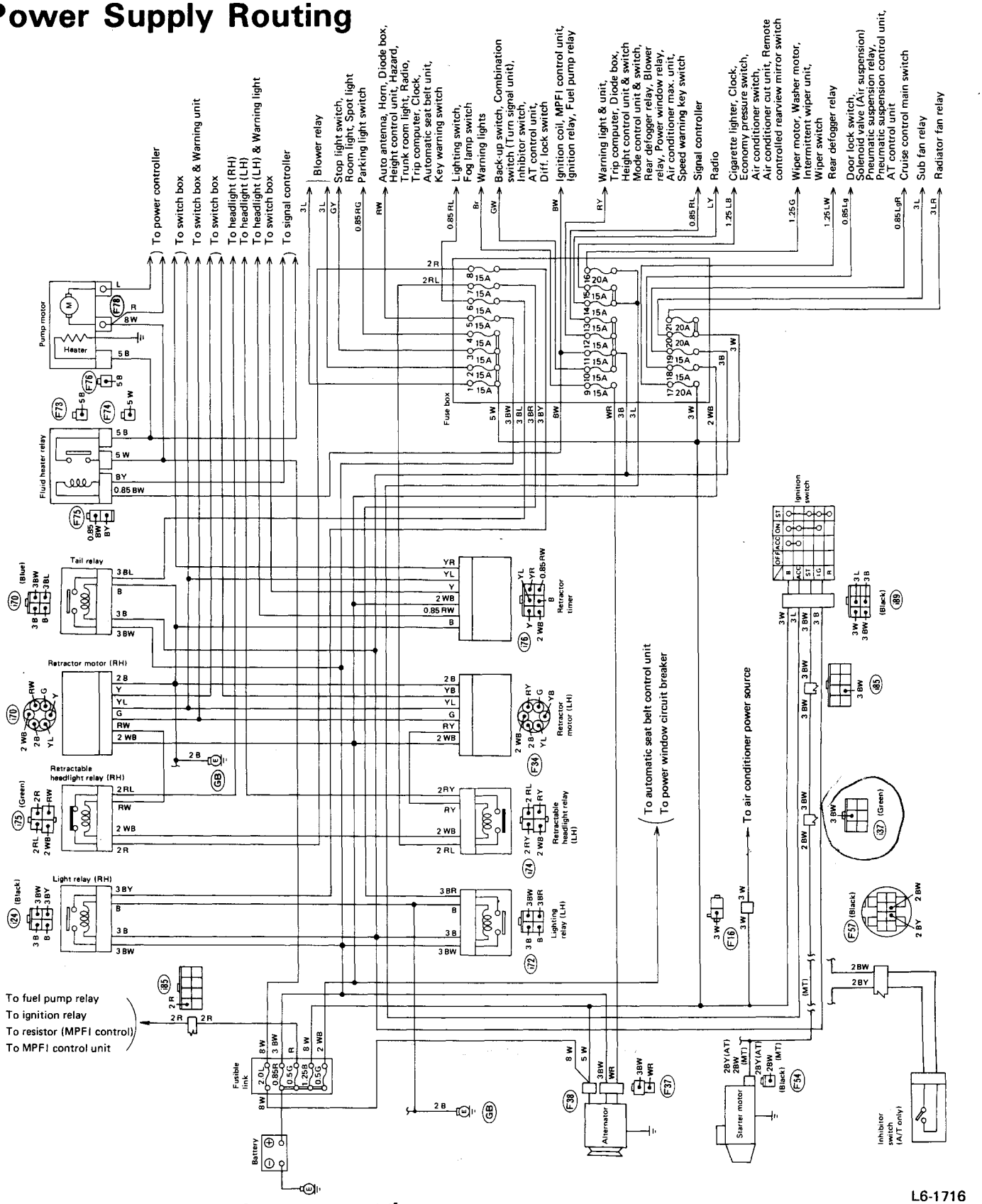

Fig. 28 Power supply routing – [2700 engine model]

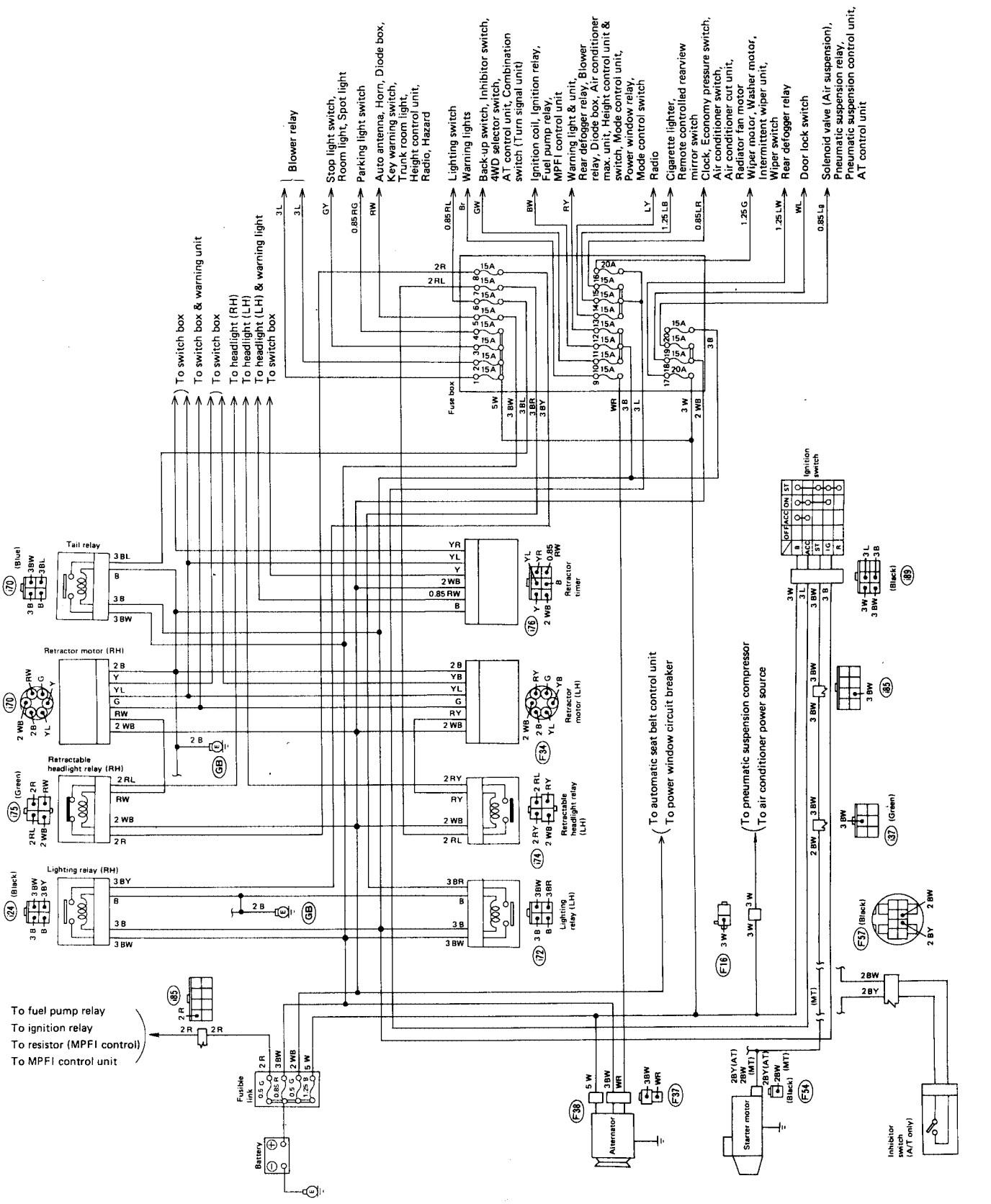

Fig. 29 Power supply routing – [1800 engine model]

L6-1717

Engine Electrical System

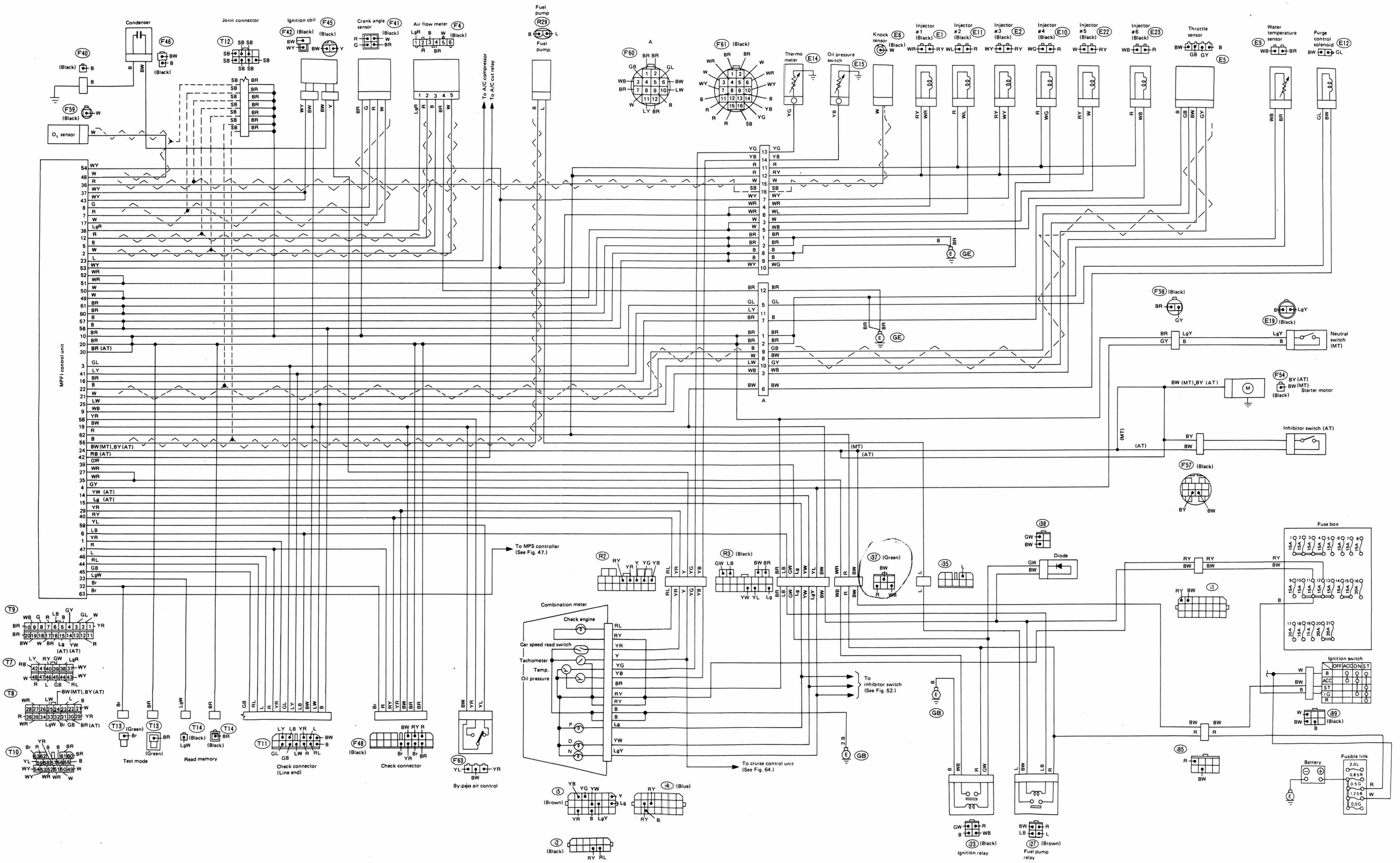

Fig. 30 Engine electrical system — [2700 engine model]

L6-1718

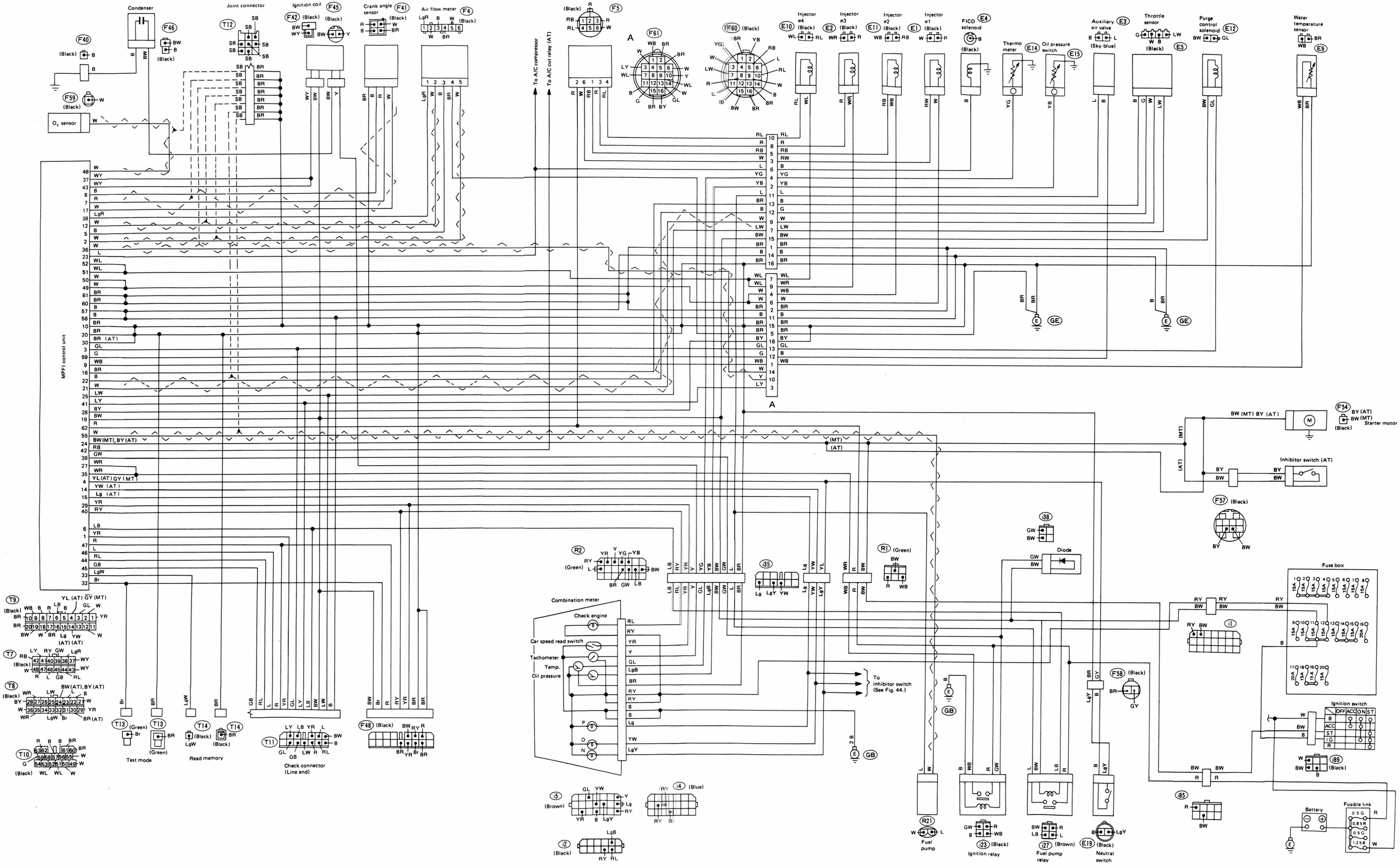

Fig. 31 Engine electrical system — [1800 engine model]

Combination Meter

A. ANALOG TYPE

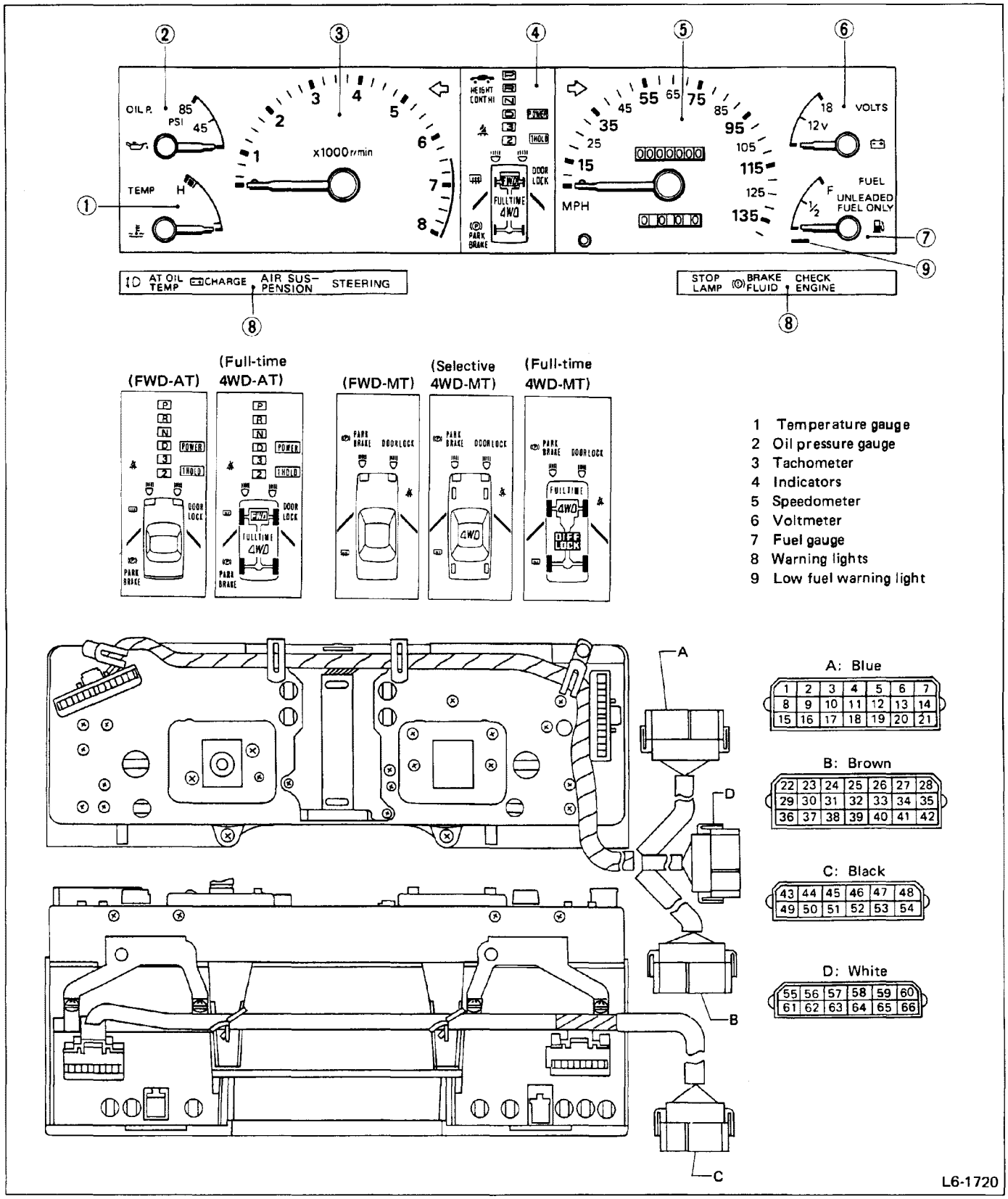

Fig. 32

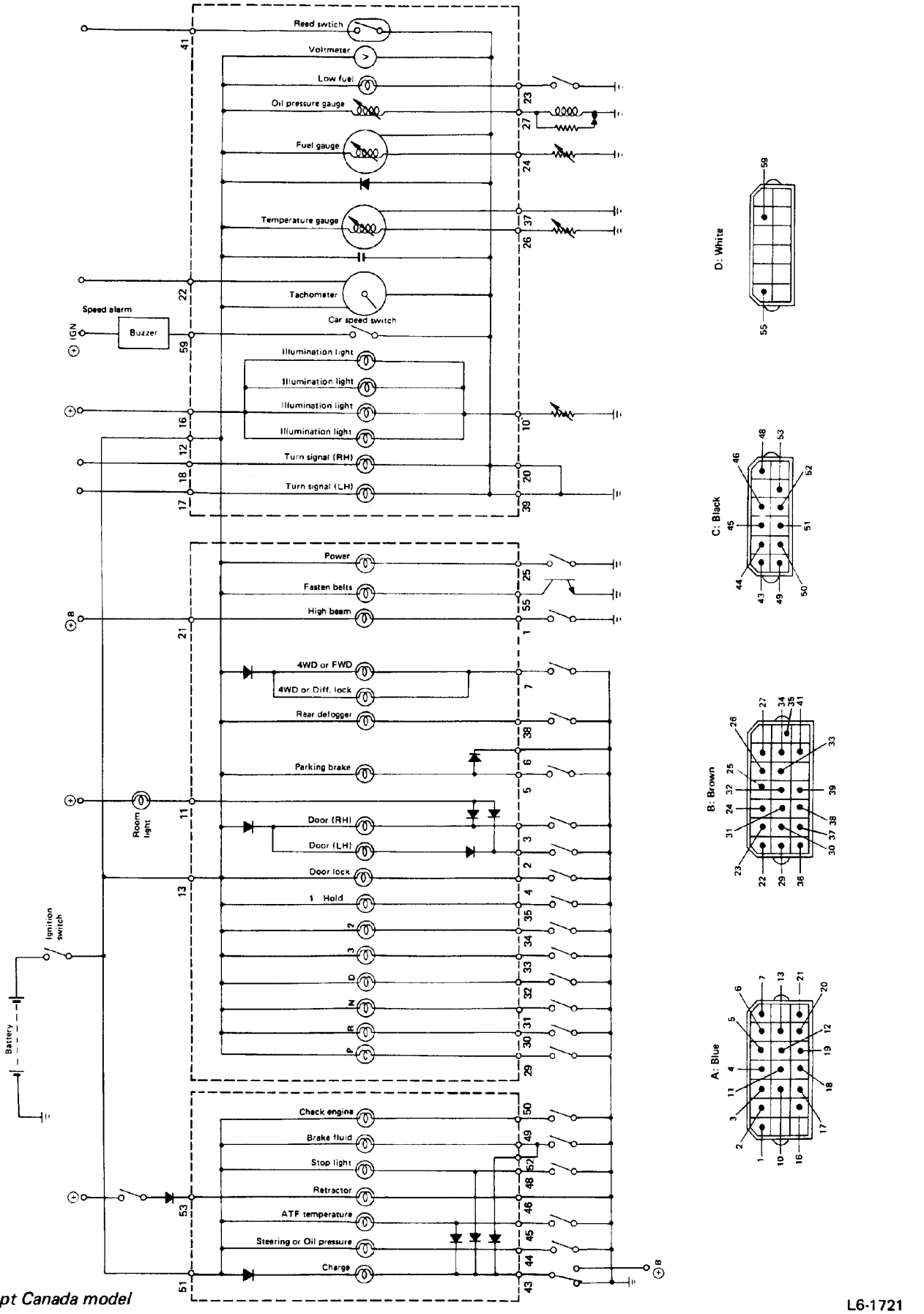

Fig. 33 Except Canada model

L6-1721

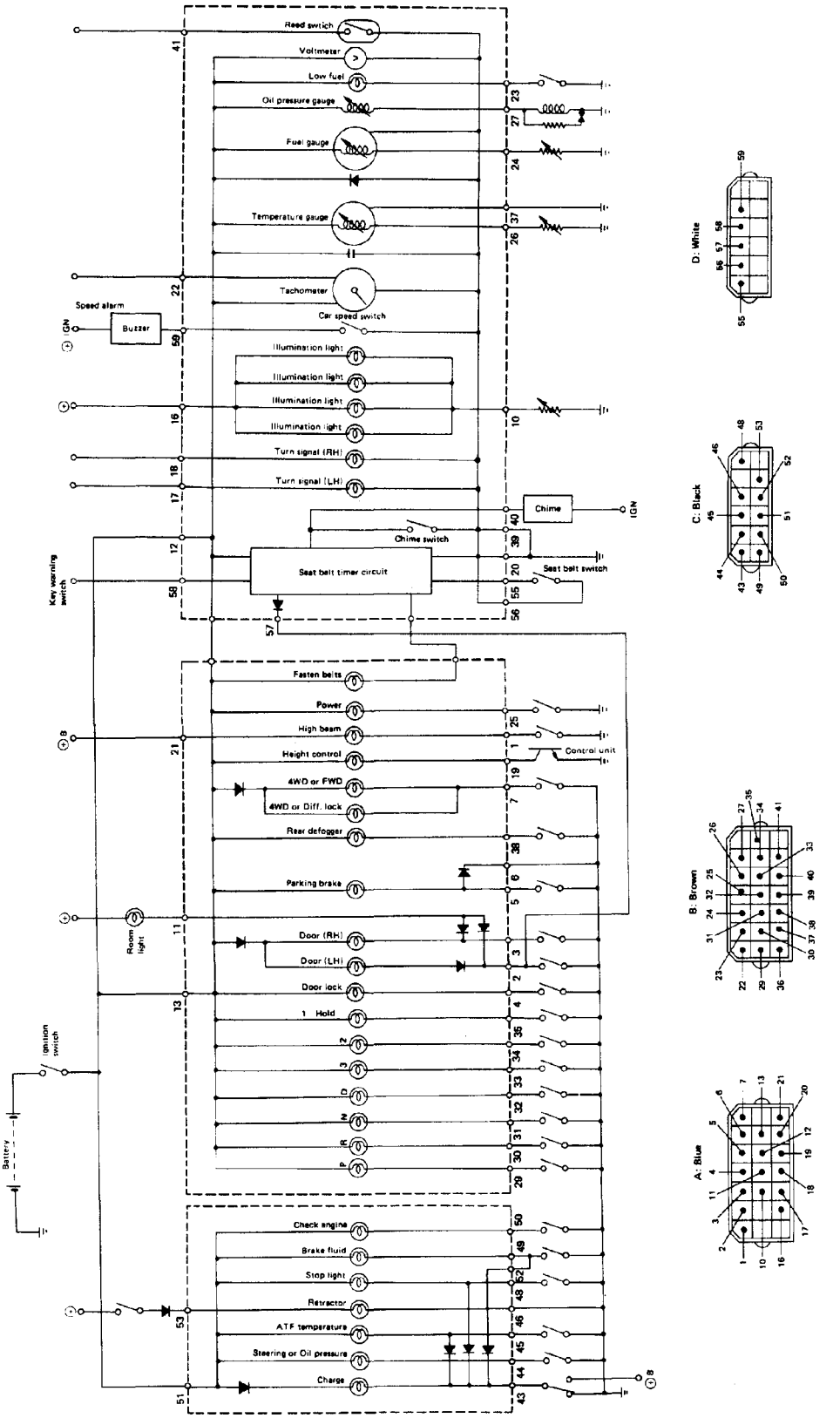

Fig. 34 Canada model

L6-1722

1) Speedometer

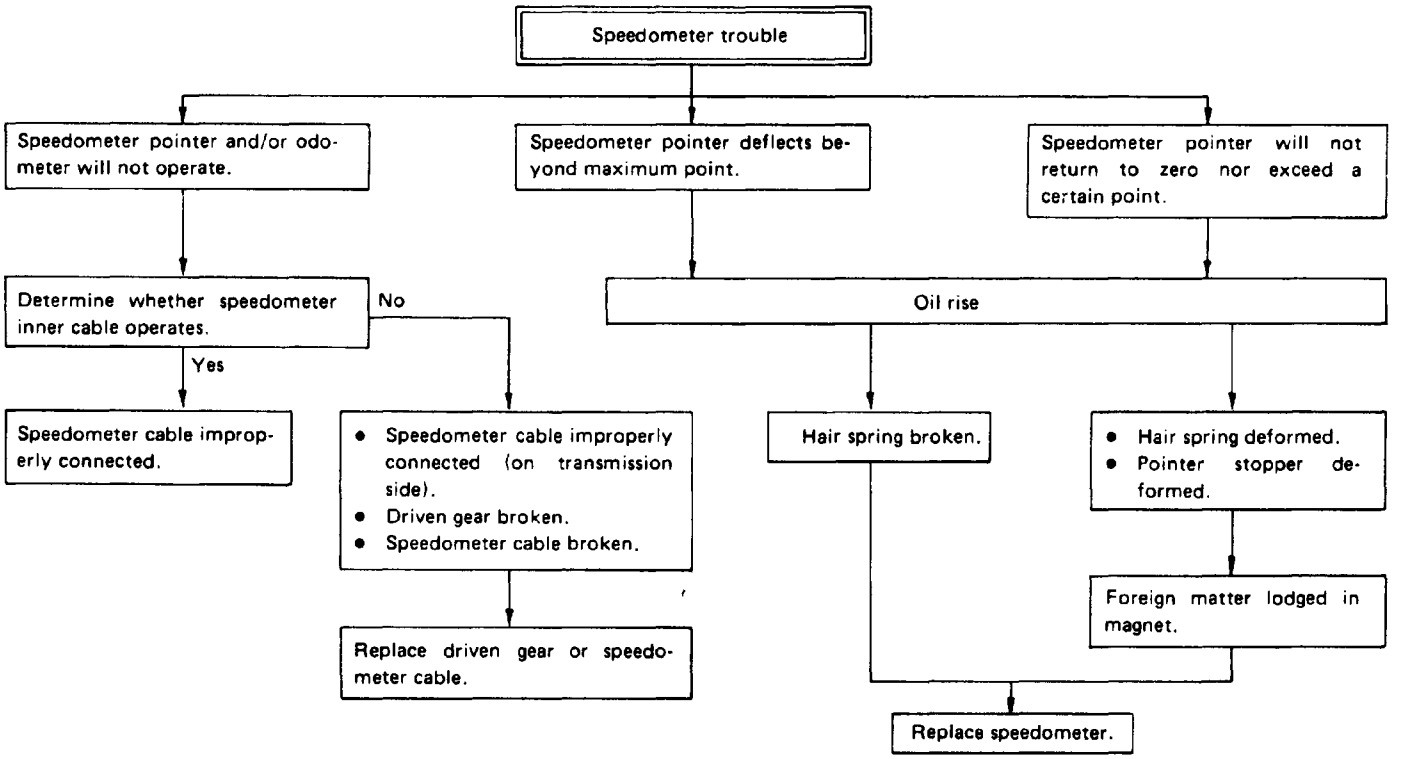

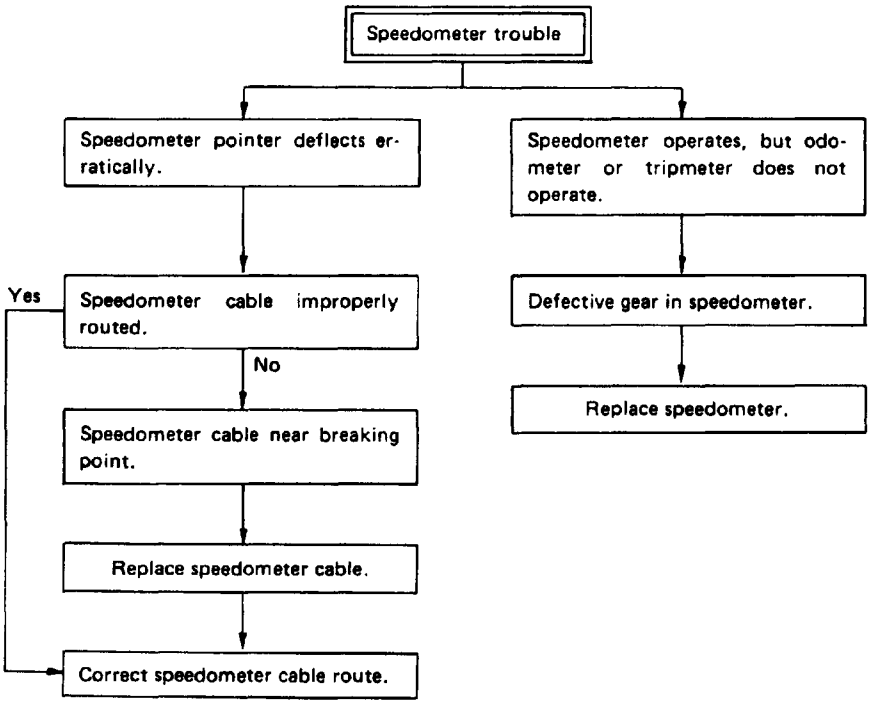

- 55-MPH speed alarm does not sound.

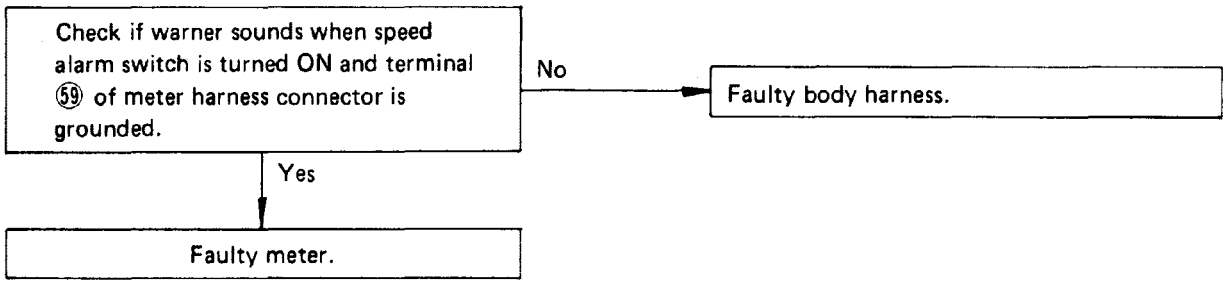

- 55-MPH speed alarm does not stop sounding.

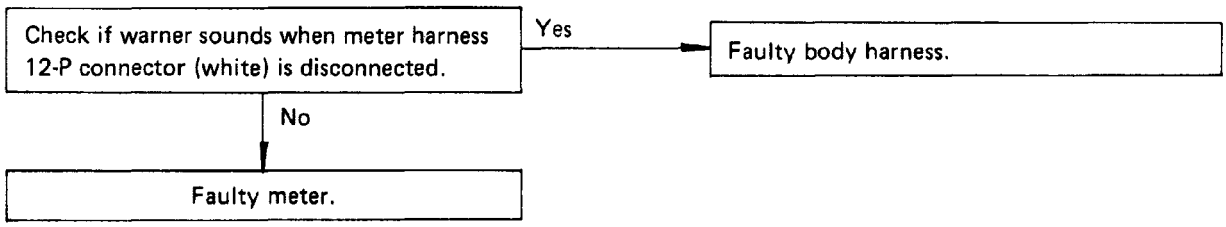

2) Tachometer

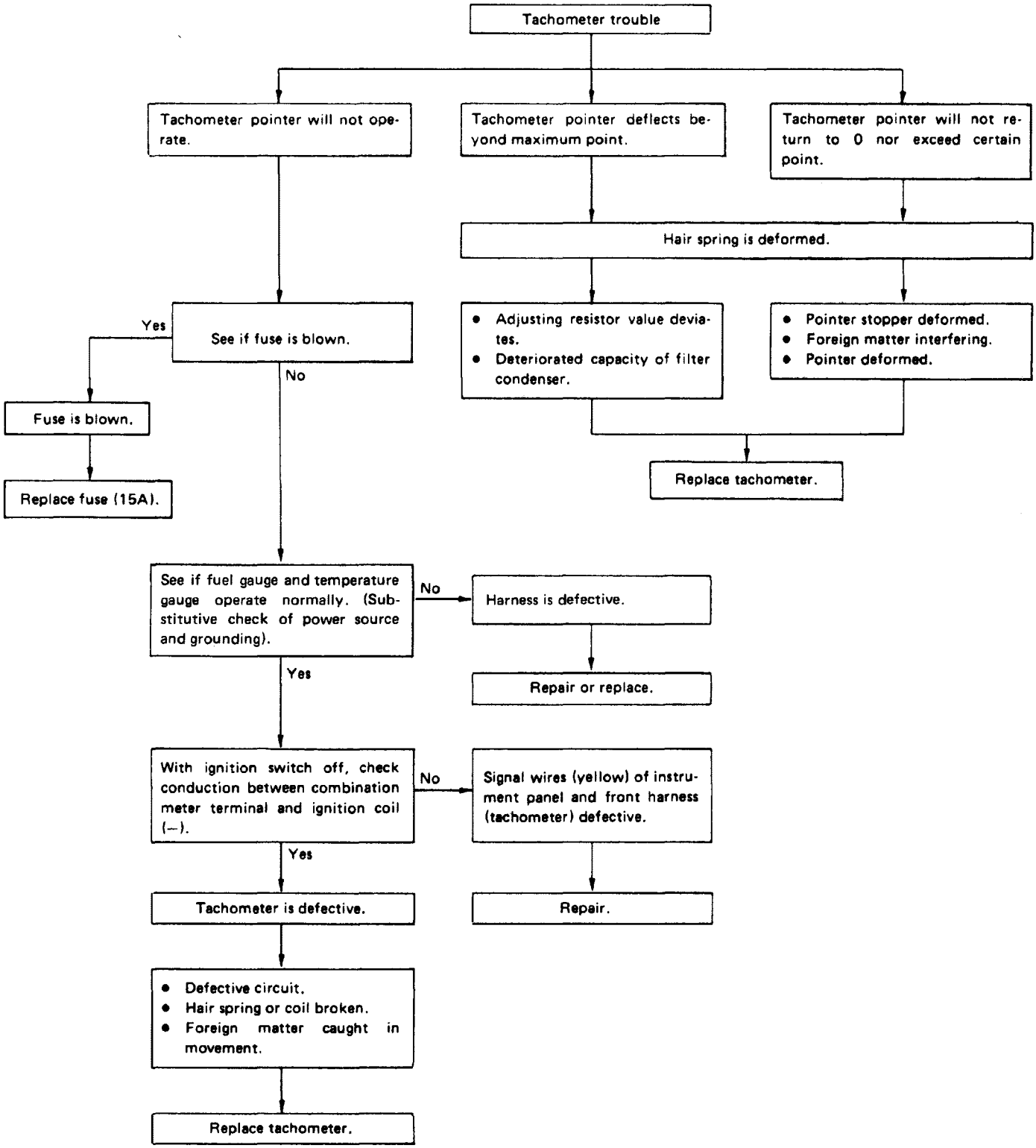

3) Temperature Gauge and Temperature Gauge Unit

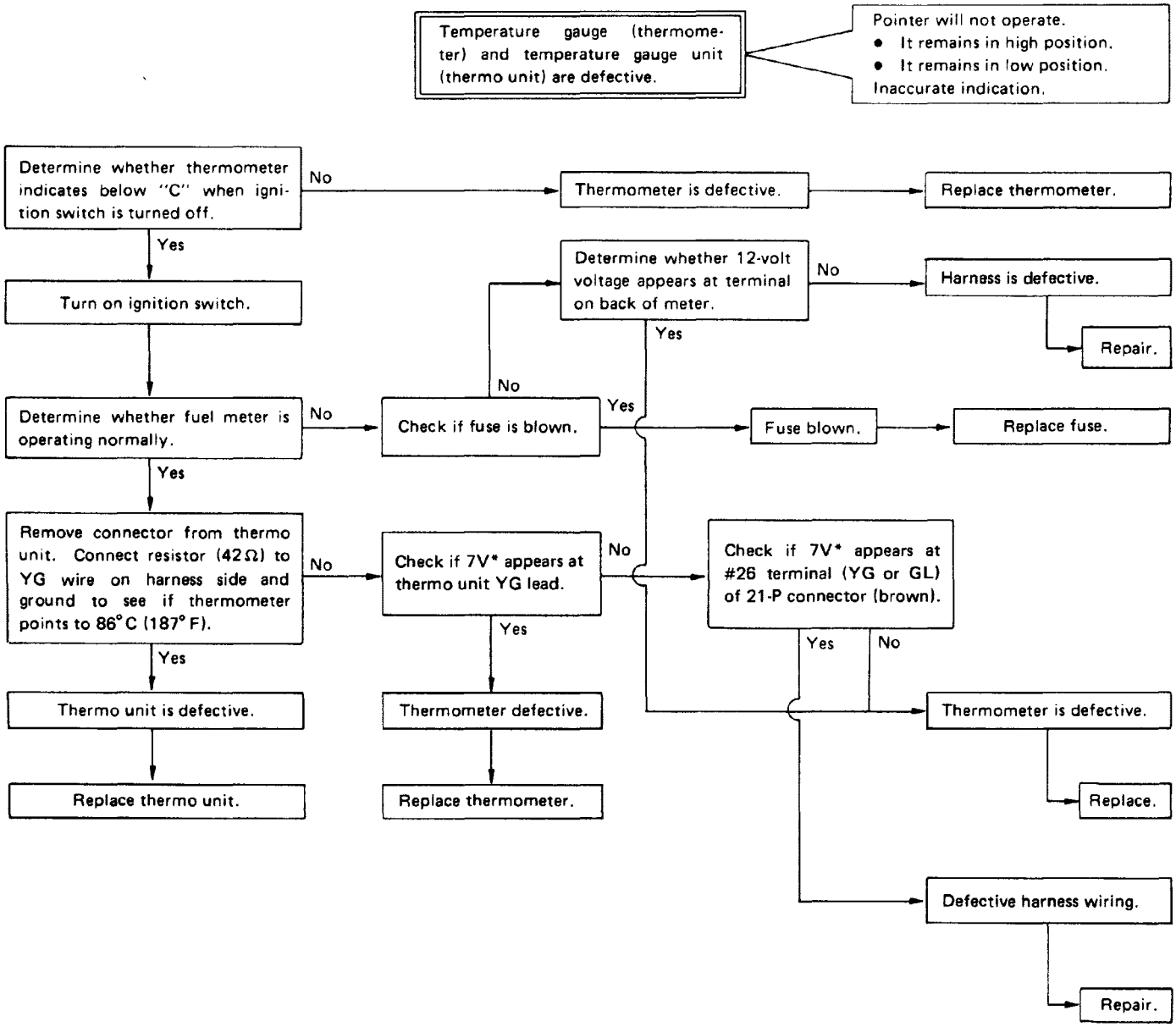

Note: *Mean value is 7V.

4) Oil Pressure Gauge

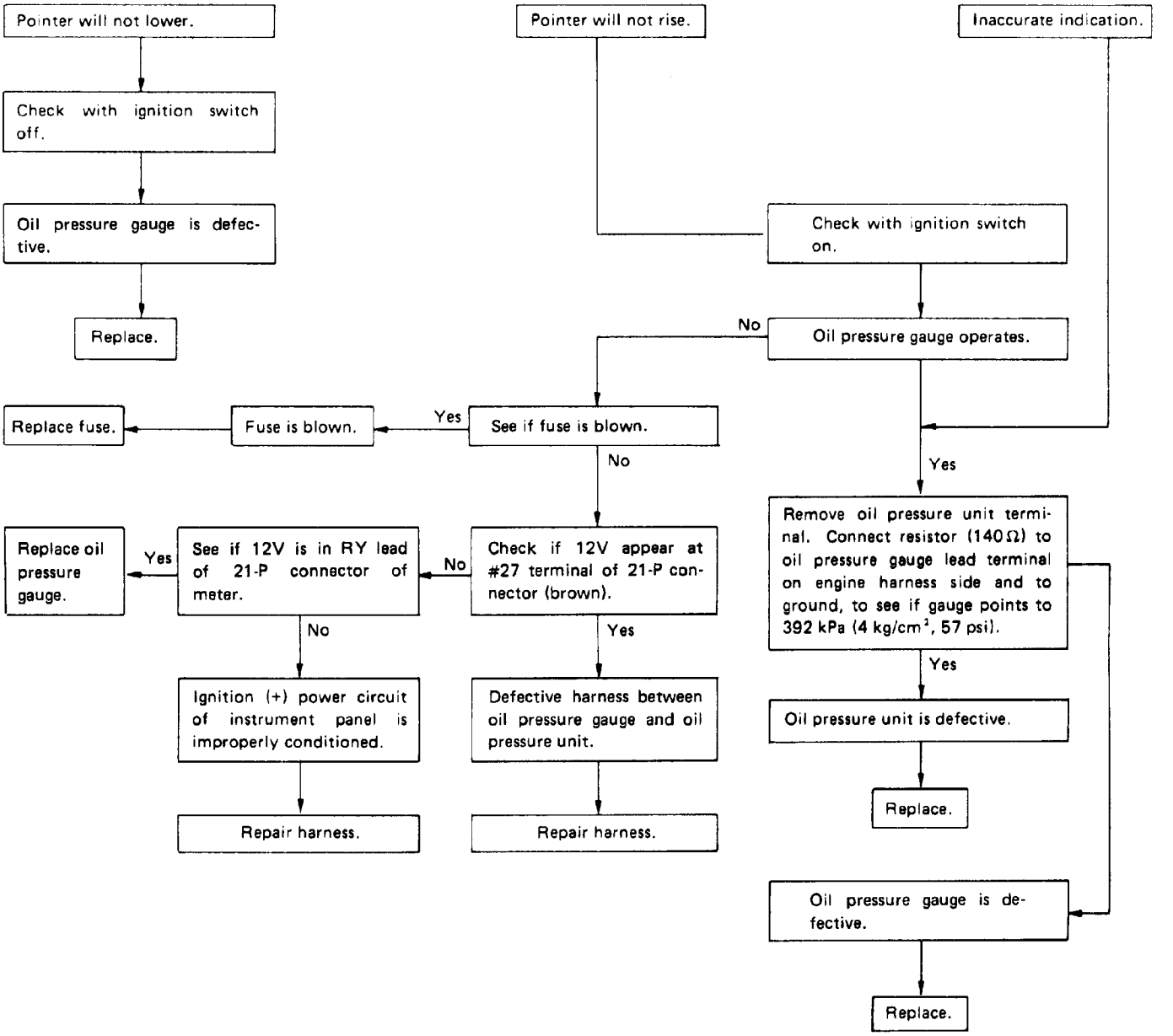

5) Voltmeter

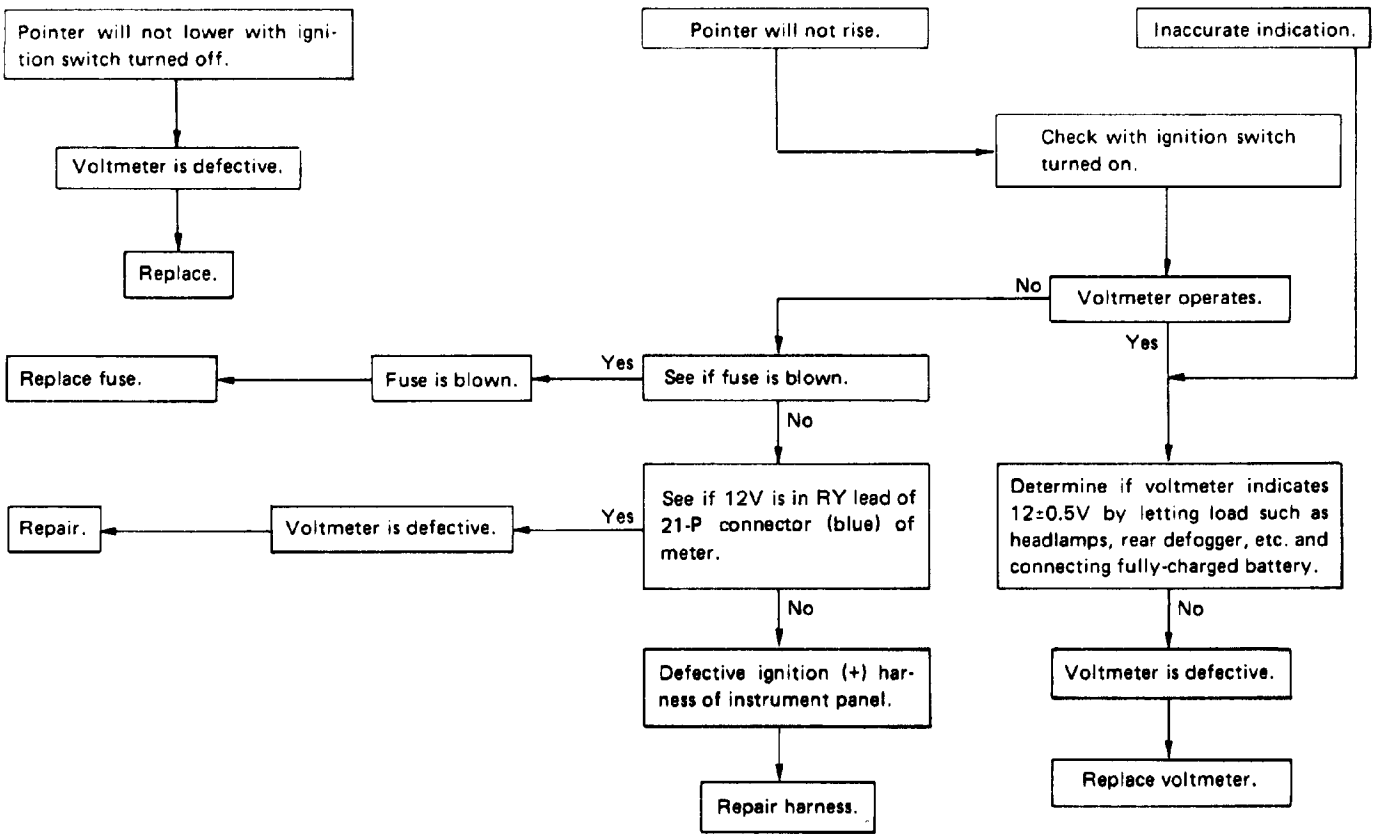
Pointer will not lower with ignition switch turned off.
Voltmeter is defective.
Replace.
Pointer will not rise.
Inaccurate indication.
Check with ignition switch turned on.
No
Voltmeter operates.
Yes
Replace fuse.
Fuse is blown.
Yes
See if fuse is blown.
No
Repair.
Voltmeter is defective.
Yes
See if 12V is in RY lead of 21-P connector (blue) of meter.
Determine if voltmeter indicates 12±0.5V by letting load such as headlamps, rear defogger, etc. and connecting fully-charged battery.
No
No
Defective ignition (+) harness of instrument panel.
Voltmeter is defective.
Repair harness.
Replace voltmeter.

Fuel Gauge

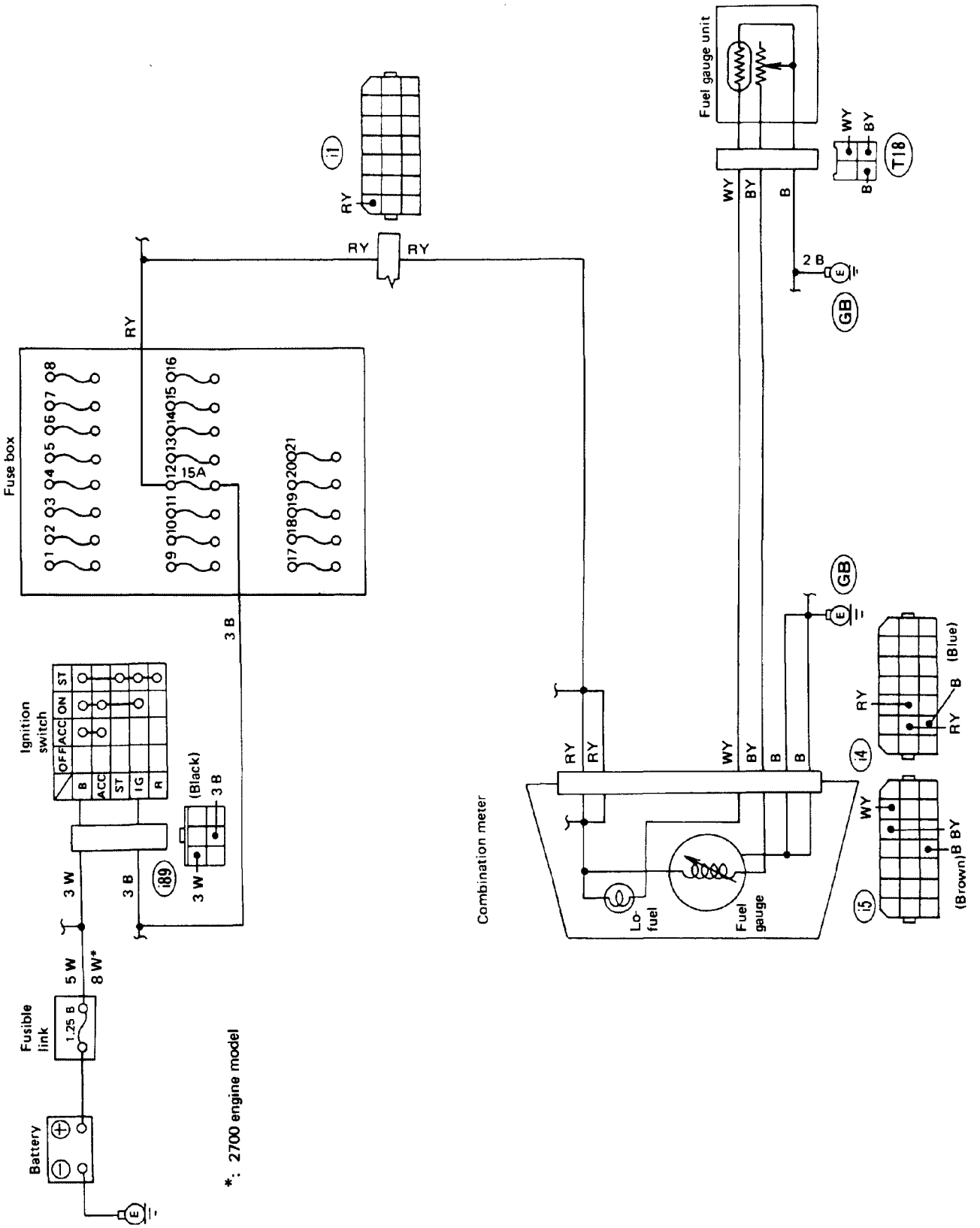

Fig. 35

L6-1723

6) Fuel Guage and Fuel Gauge Unit

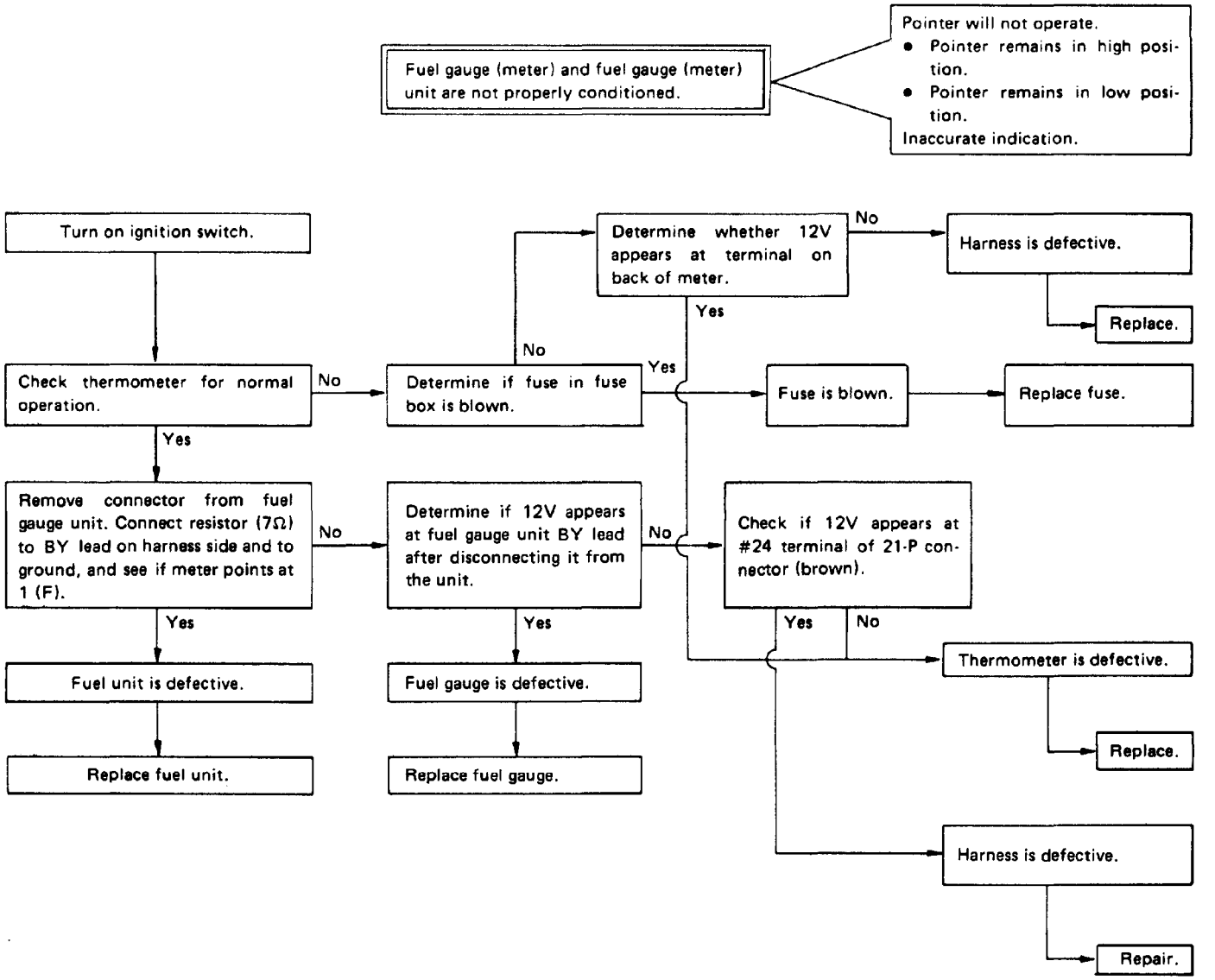

7) Low Fuel Indicator Light

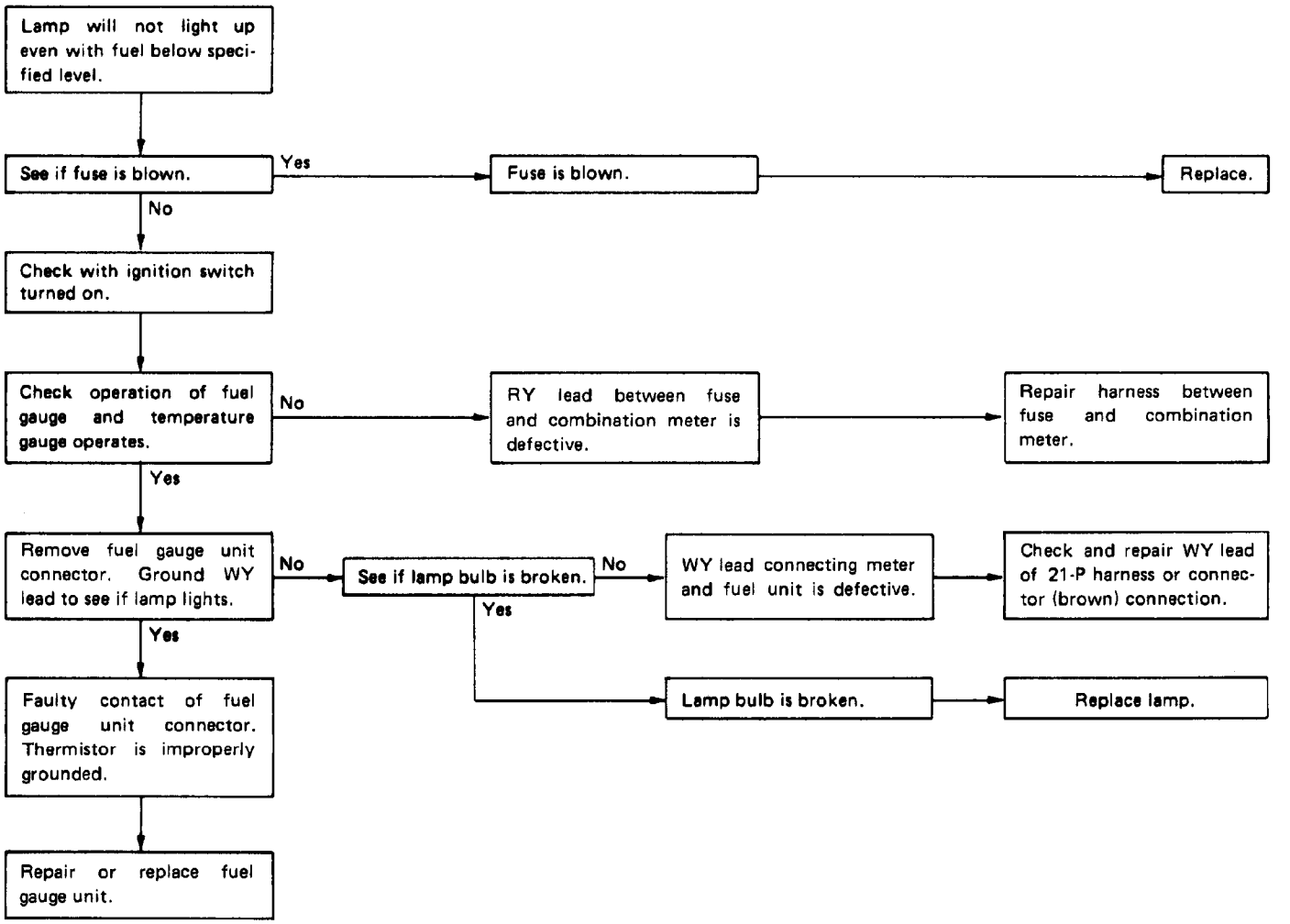

8) AT Indicator

(1) AT indicator does not come on regardless of shift lever position.

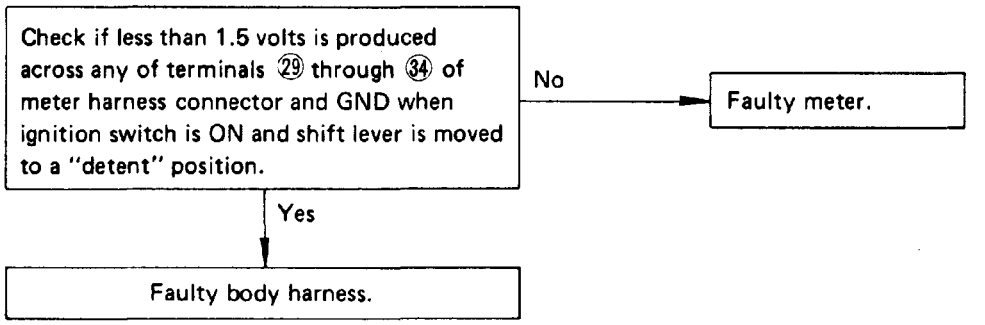

(2) AT indicator display does not change to the position corresponding to that of gear shift lever.

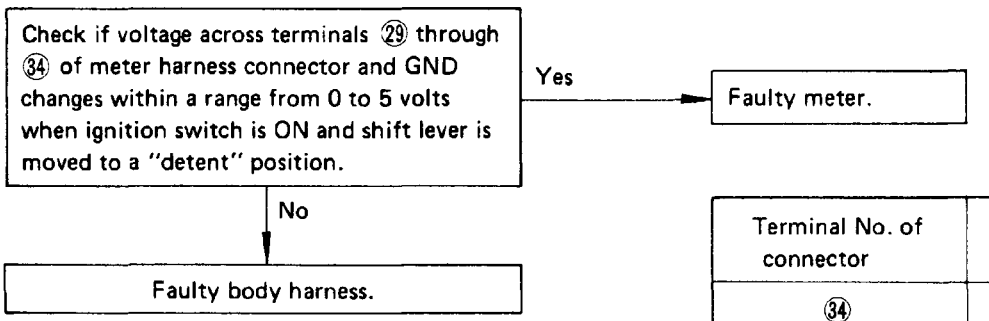

Terminal No. of connector	Shift position
㉞	2
㉝	3
㉜	D
㉛	N
㉚	R
㉙	P

9) Power Indicator

Power indicator does not display.

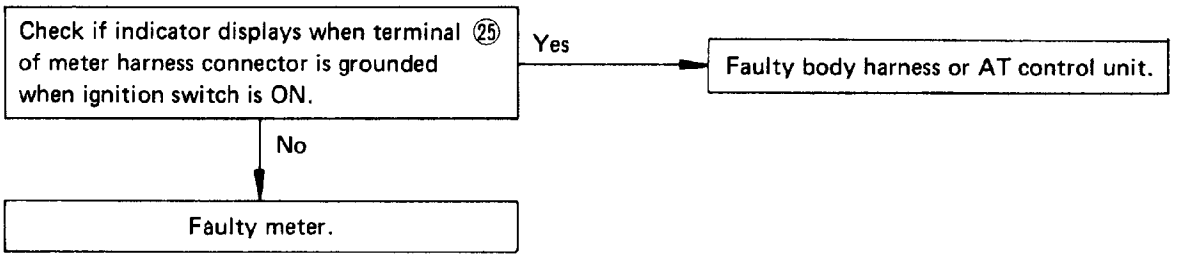

10) Height Control Indicator (Canada model)

(1) "HI" indicator does not display when switch is turned ON. ("LO" indicator remains ON.)

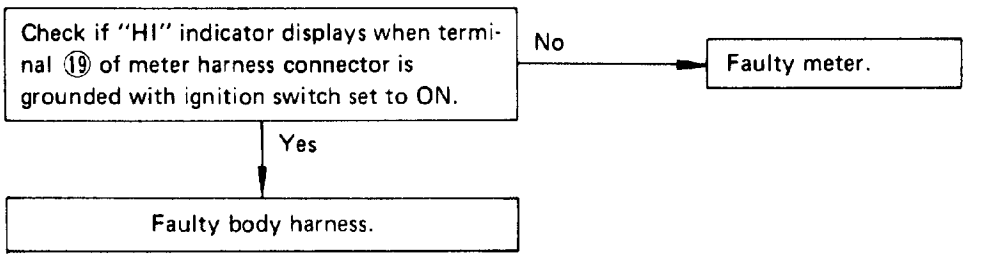

(2) "HI" indicator remains on regardless of switch position.

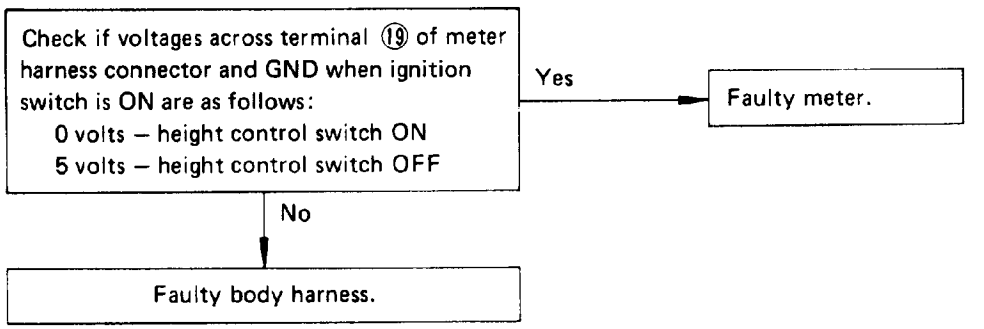

Trip Computer

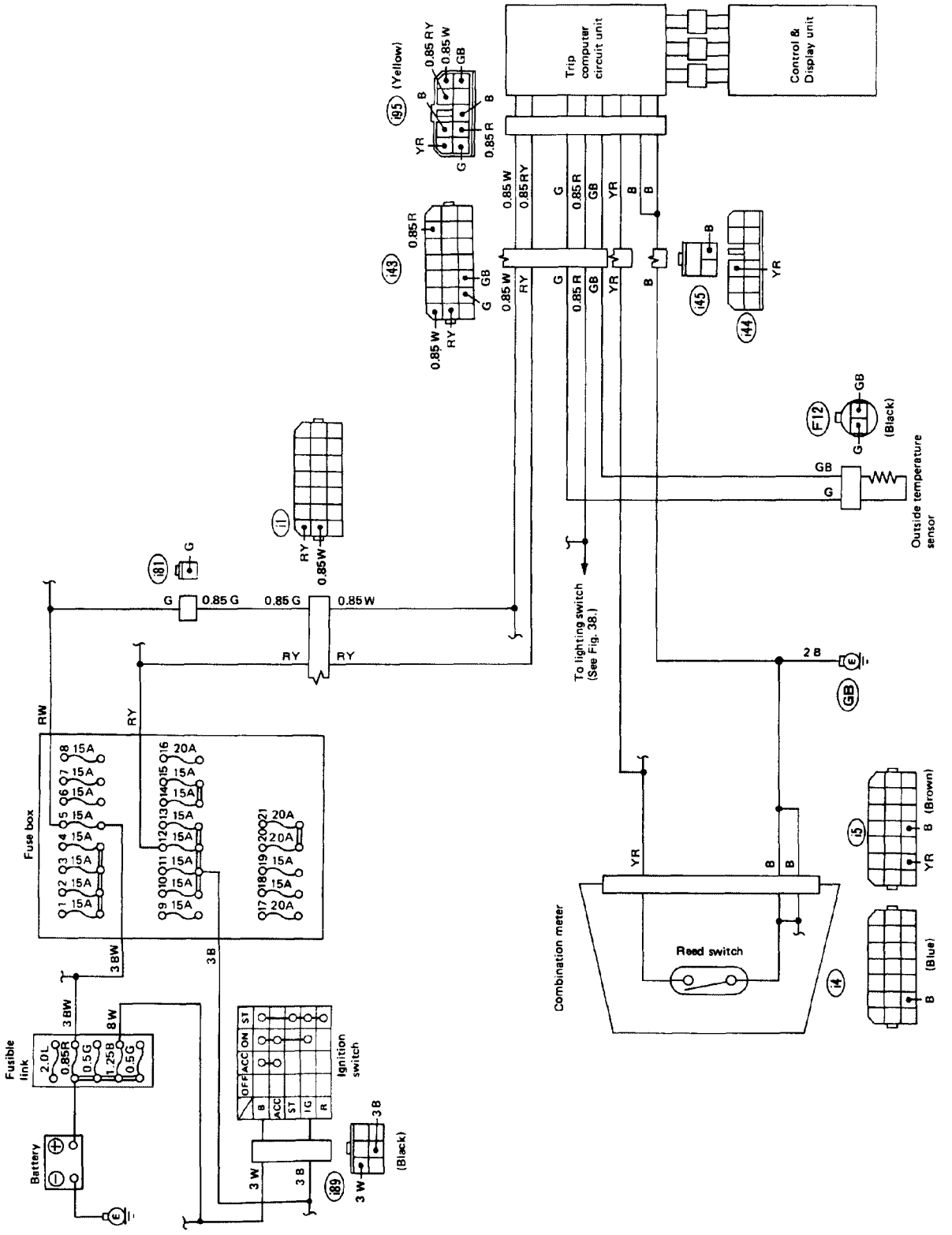

Fig. 36 Trip computer – [2700 engine model]

L6-1724

1) All Functions do not Operate (No LED's Glow)

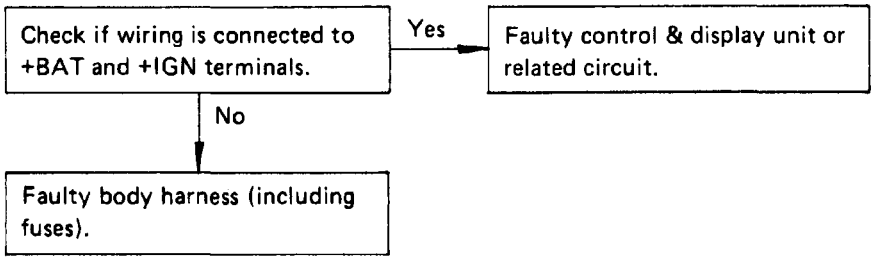

2) Display (LCD) does not Glow or is Erroneous

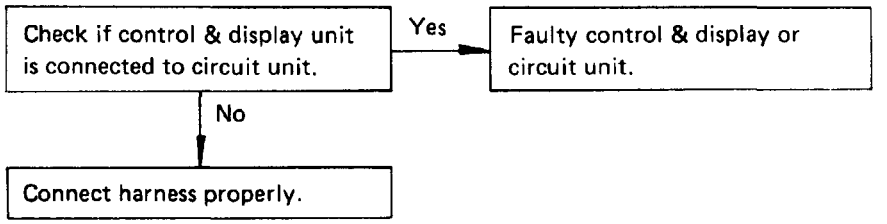

3) Clock/Time Alarm Unit does not Operate

Circuit unit is faulty.

4) Tripmeter/Average Car Speed Unit does not Operate

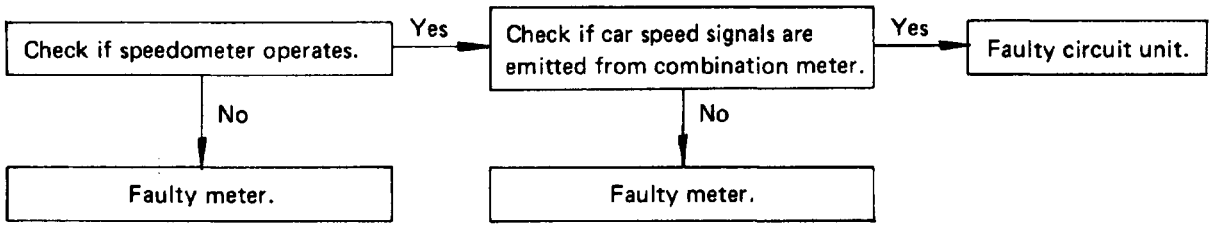

5) Buzzer does not Sound

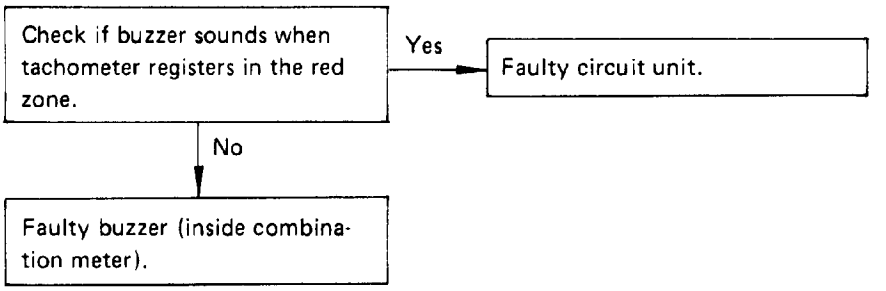

6) Meter Display does not Illuminate When Ignition Switch is Turned ON

Illumination lamp burned out or control & display unit faulty.

7) Meter Display does not Dim When Illumination Control Switch is Turned ON

Control & display unit may be faulty.

8) Control & Display Unit does not Illuminate When Illumination Control Switch is Turned ON

Illumination lamp may be burned out.

Lighting System

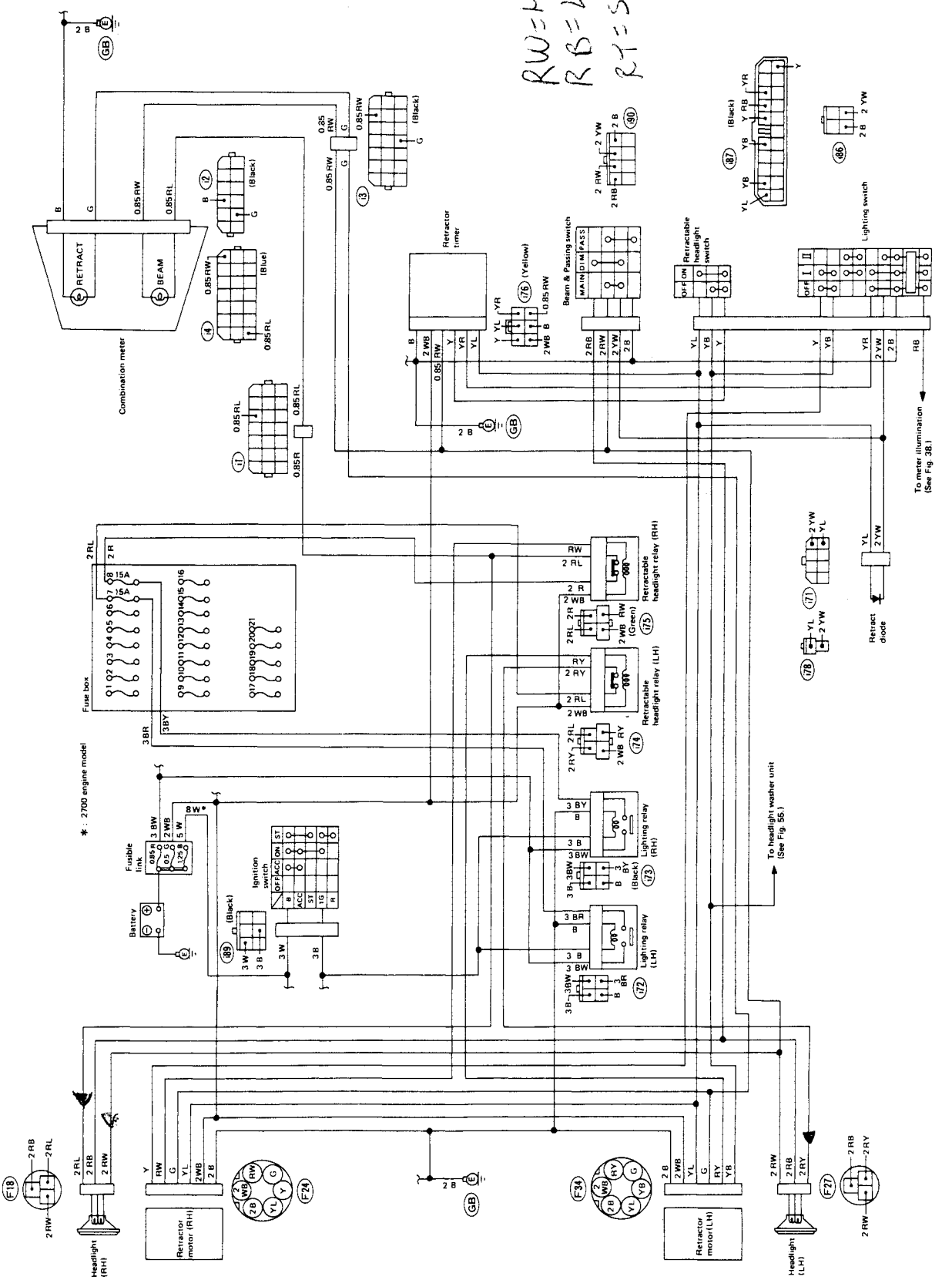

Fig. 37

L6-1725

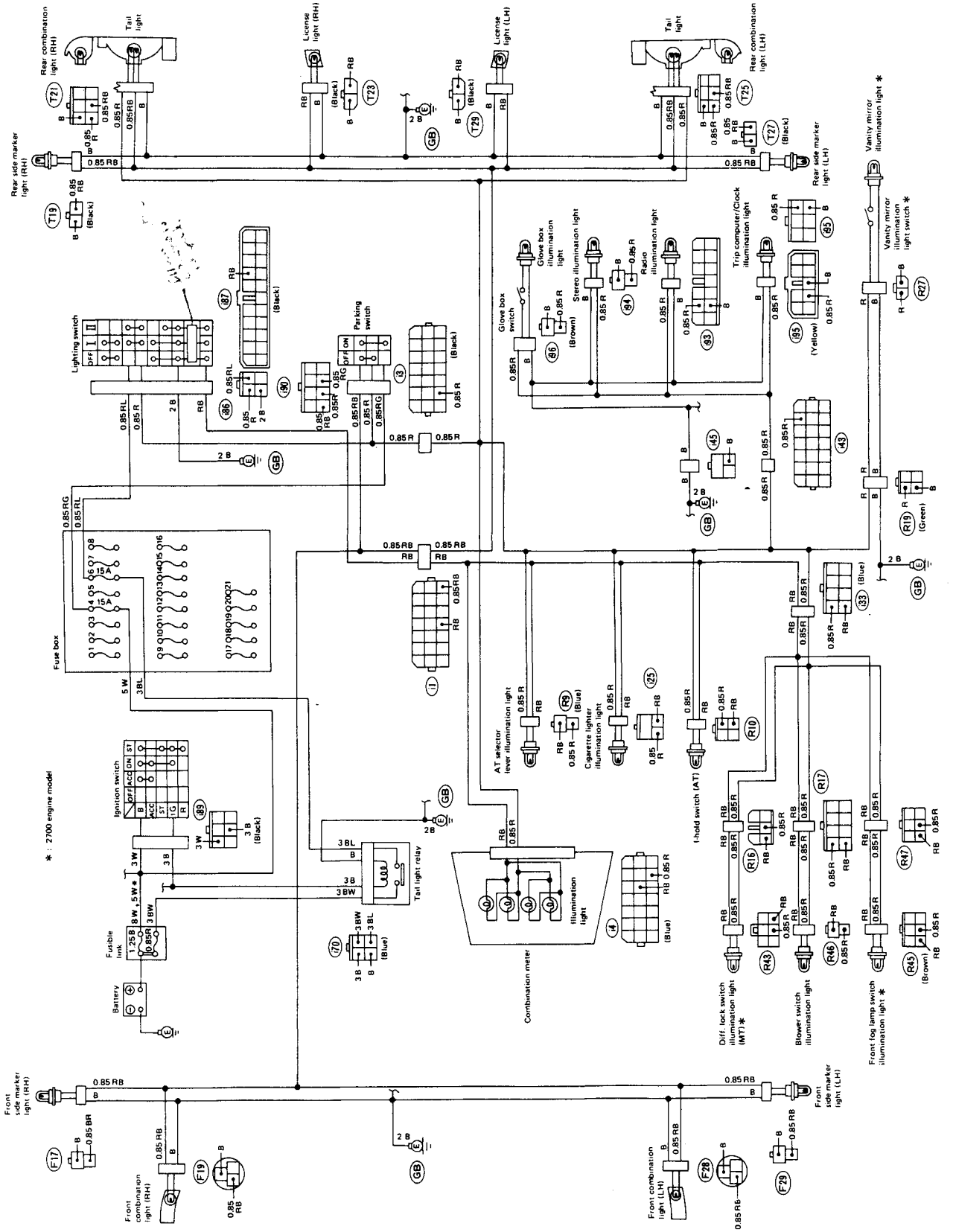

Fig. 38

L6-1726

1) Headlights do not Open or Retract When Lighting Switch is Operated

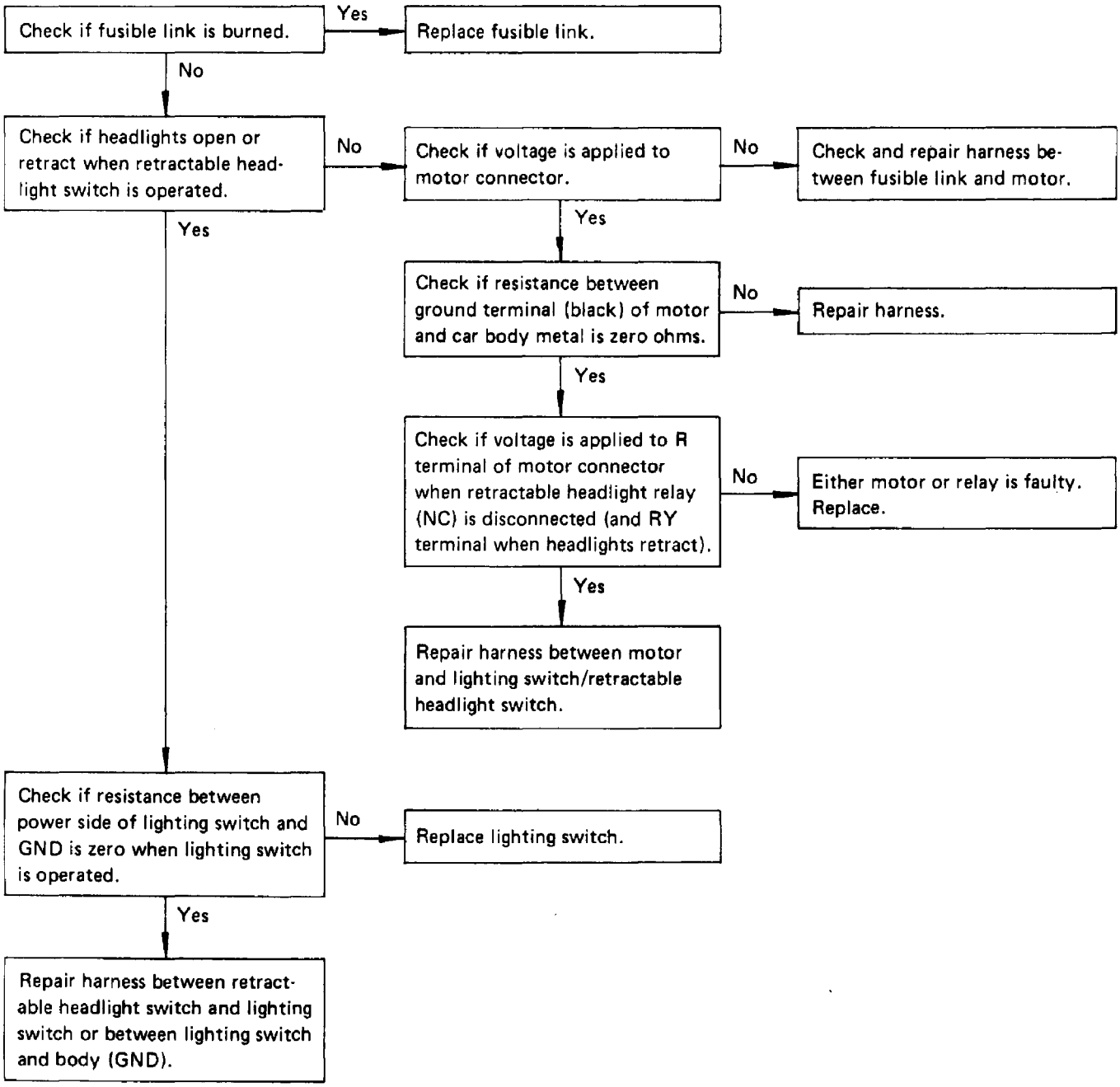

2) Headlights do not Open or Retract When Retractable Headlight Switch is Operated

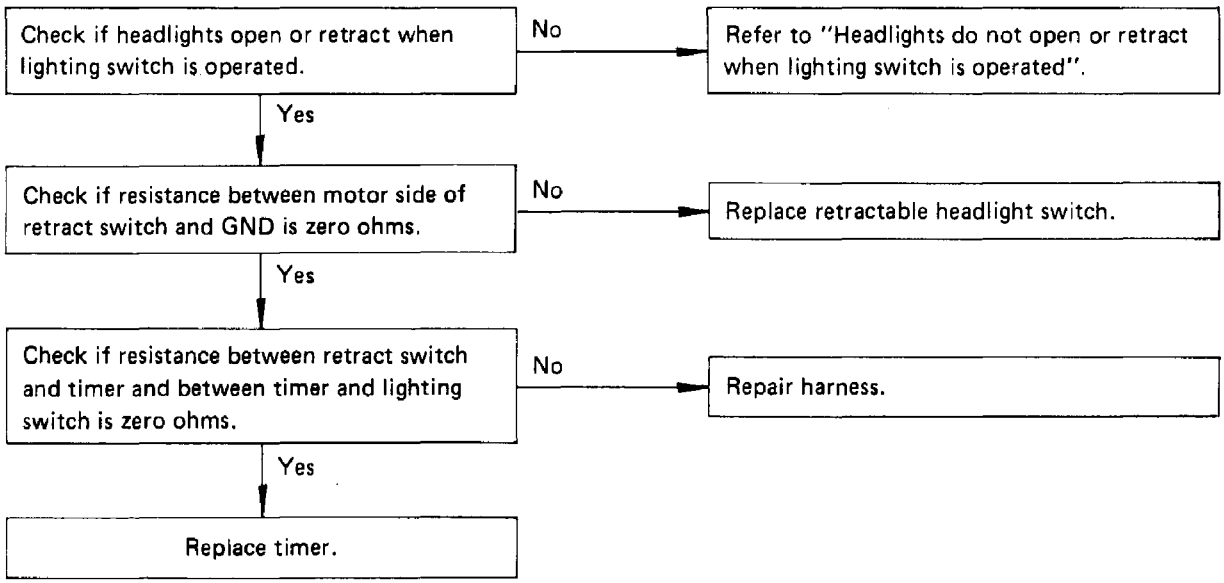

3) Headlights do not Open or Retract When Passing Switch is Operated

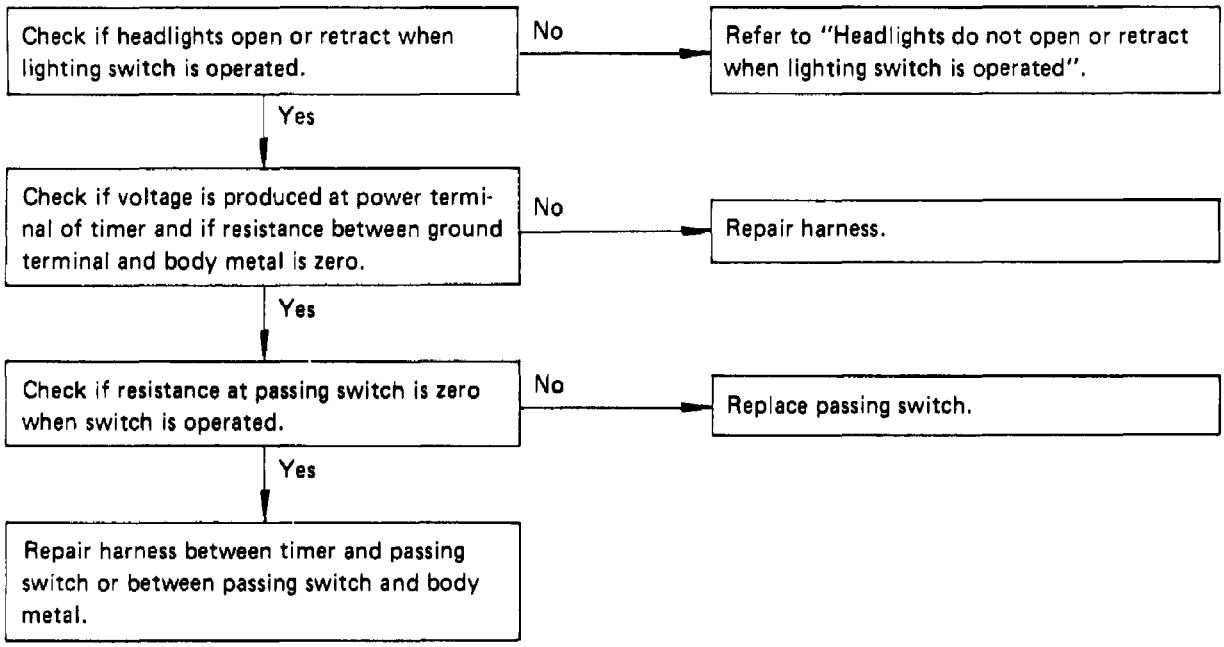

4) Only One Headlight Opens and Retracts When Lighting Switch is Operated

Only left headlight opens and retracts.	Repair shorted harness between motor and lighting switch.
Only right headlight opens and retracts.	Repair shorted harness between motor and lighting switch/retractable headlight switch.

5) Headlights do not Come on When Lighting Switch is Operated

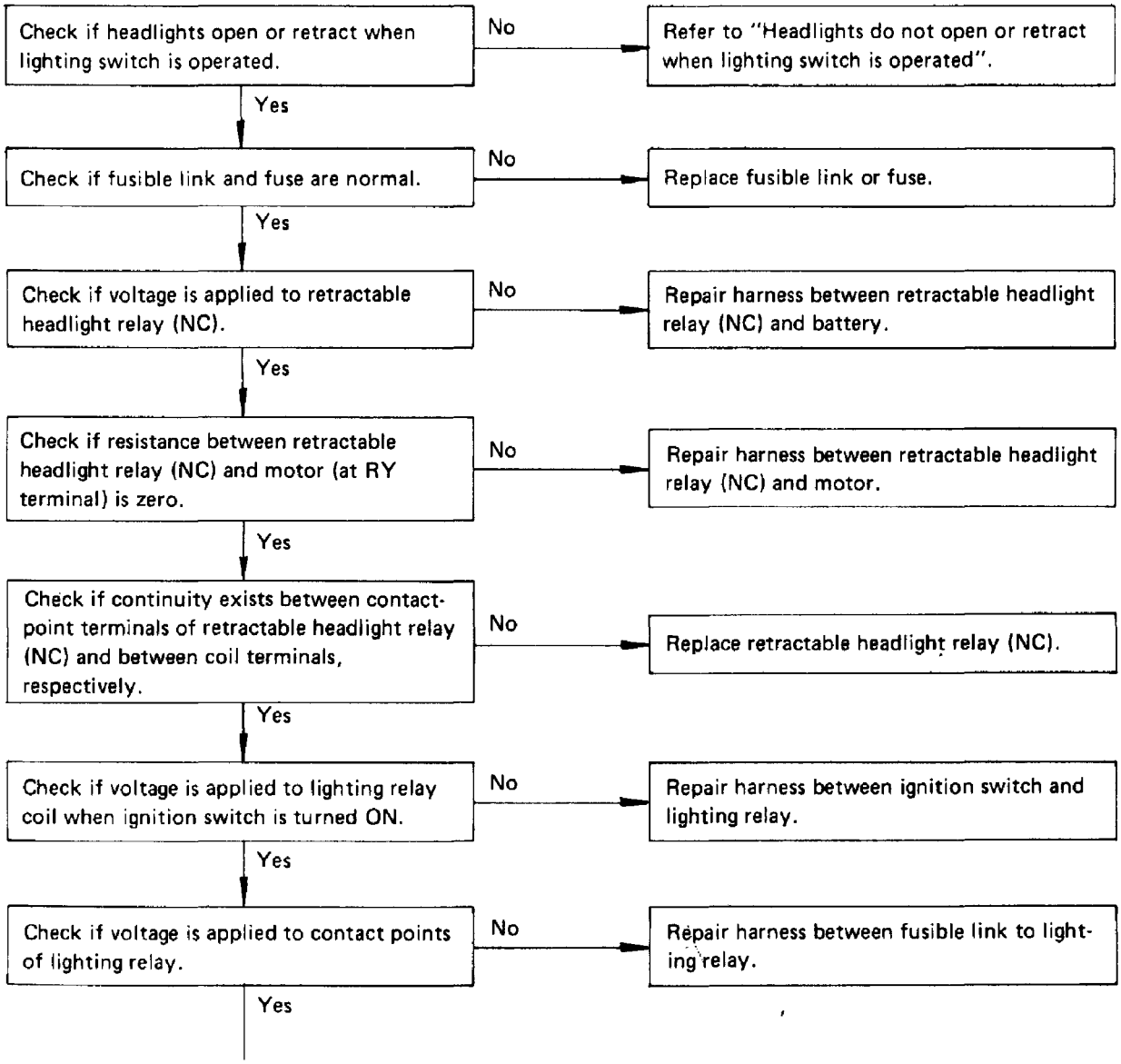

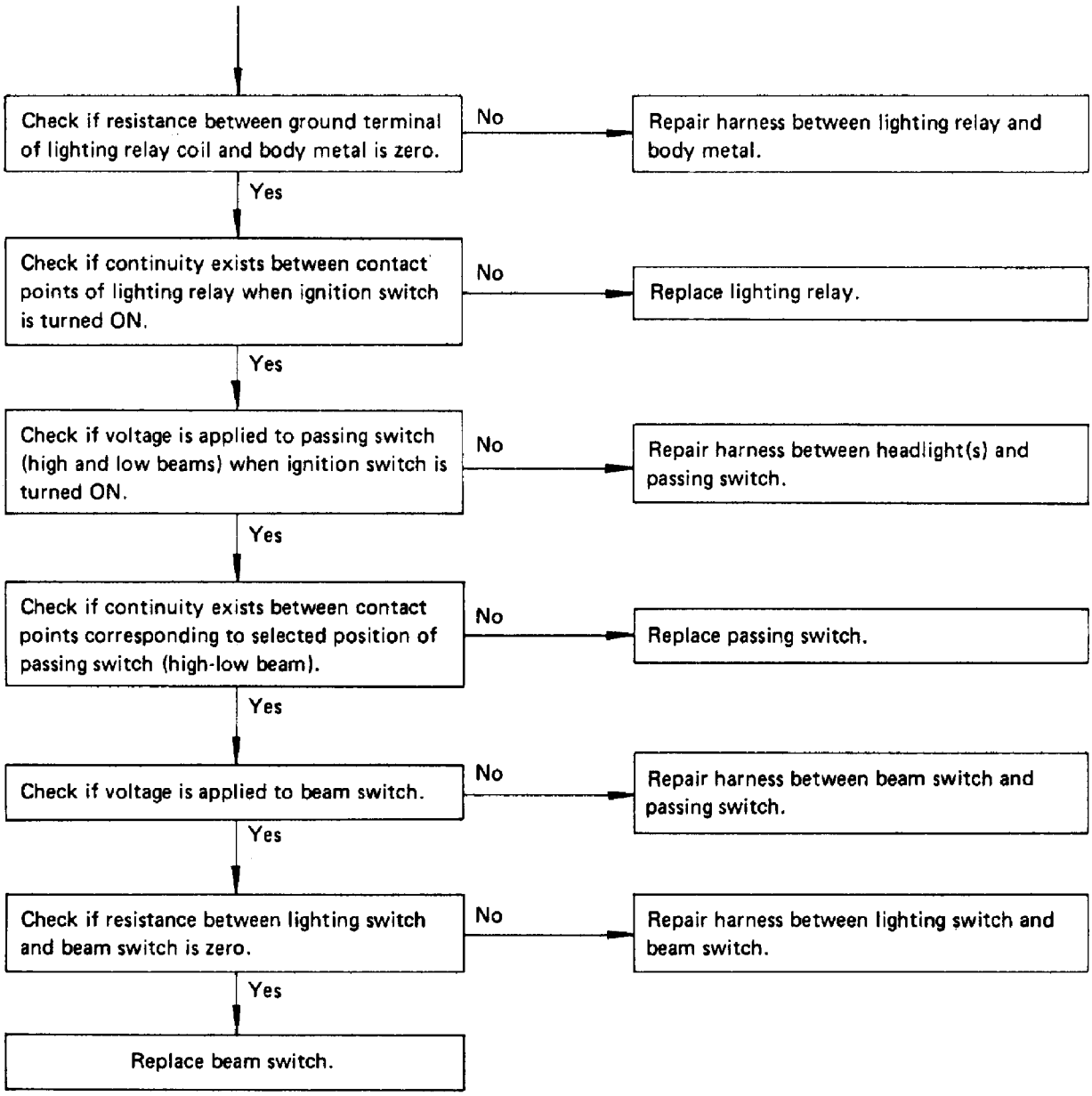
Check if resistance between ground terminal of lighting relay coil and body metal is zero.
No
Repair harness between lighting relay and body metal.
Yes
Check if continuity exists between contact points of lighting relay when ignition switch is turned ON.
No
Replace lighting relay.
Yes
Check if voltage is applied to passing switch (high and low beams) when ignition switch is turned ON.
No
Repair harness between headlight(s) and passing switch.
Yes
Check if continuity exists between contact points corresponding to selected position of passing switch (high-low beam).
No
Replace passing switch.
Yes
Check if voltage is applied to beam switch.
No
Repair harness between beam switch and passing switch.
Yes
Check if resistance between lighting switch and beam switch is zero.
No
Repair harness between lighting switch and beam switch.
Yes
Replace beam switch.

Front Fog Lamp

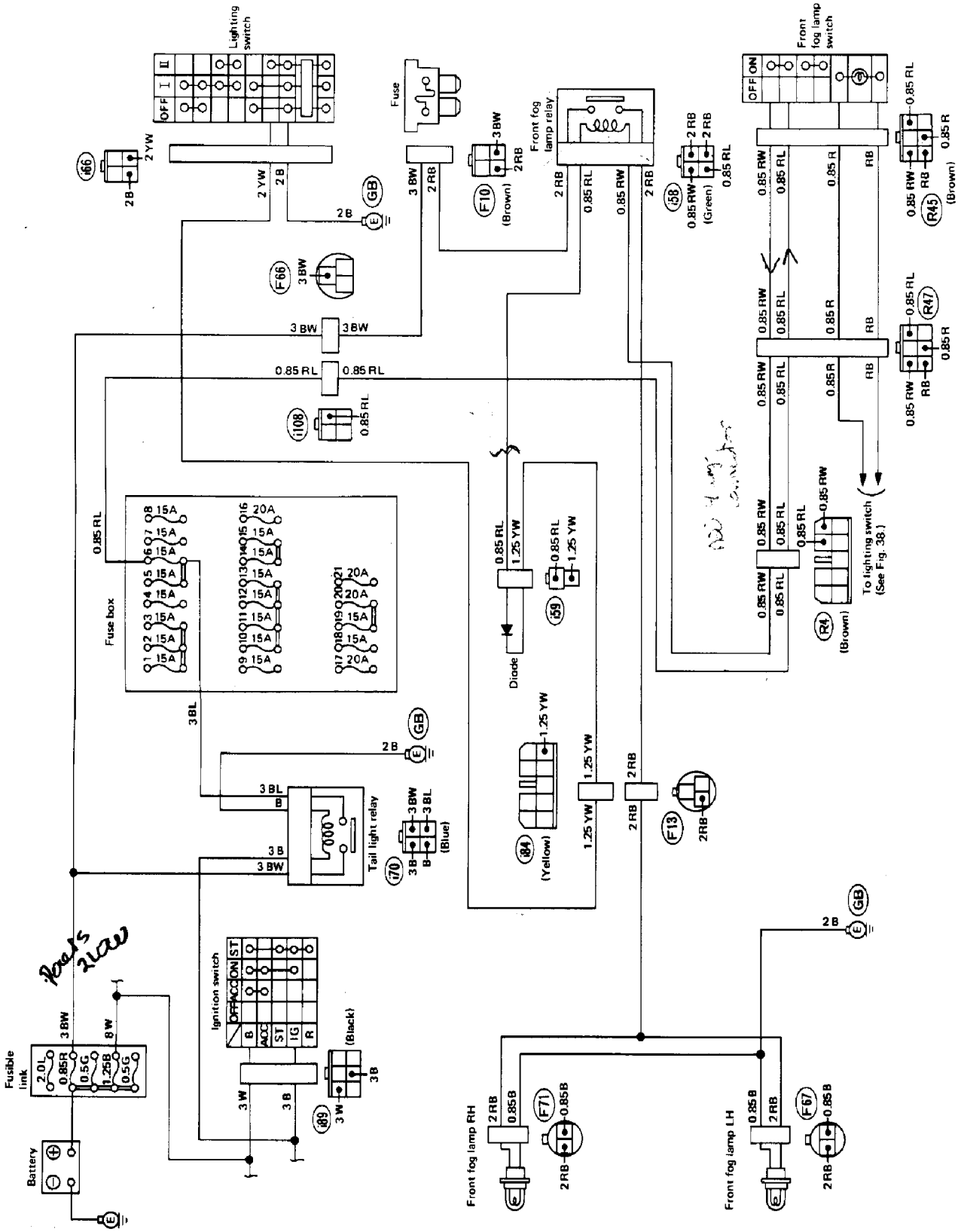

Fig. 39 Front fog lamp – [2700 engine model]

L6-1727

Turn Signal and Hazard Warning Light

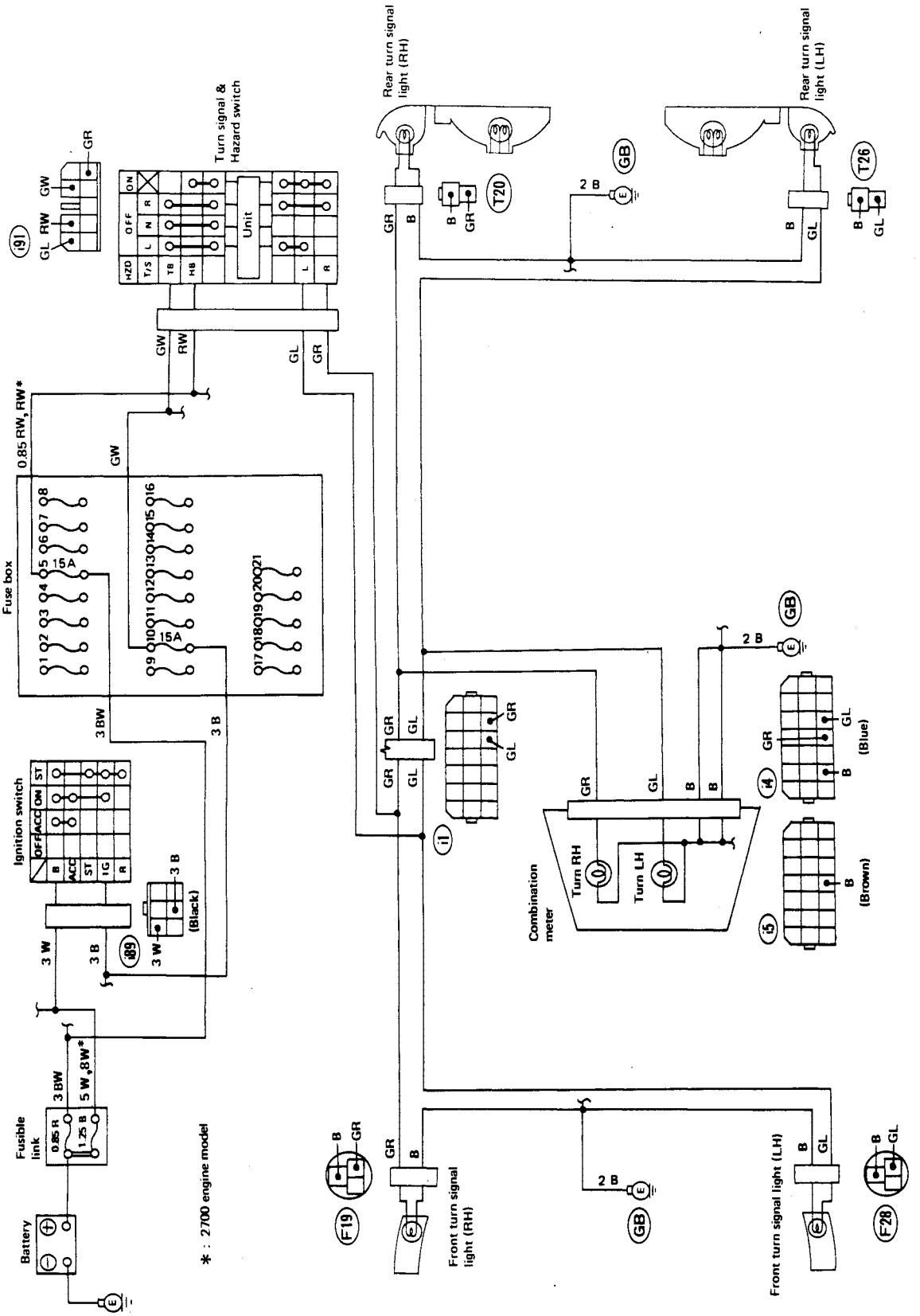

Fig. 40

L6-1728

1) Turn Signal Switch and Turn Signal & Hazard Unit (With built-in combination switch)

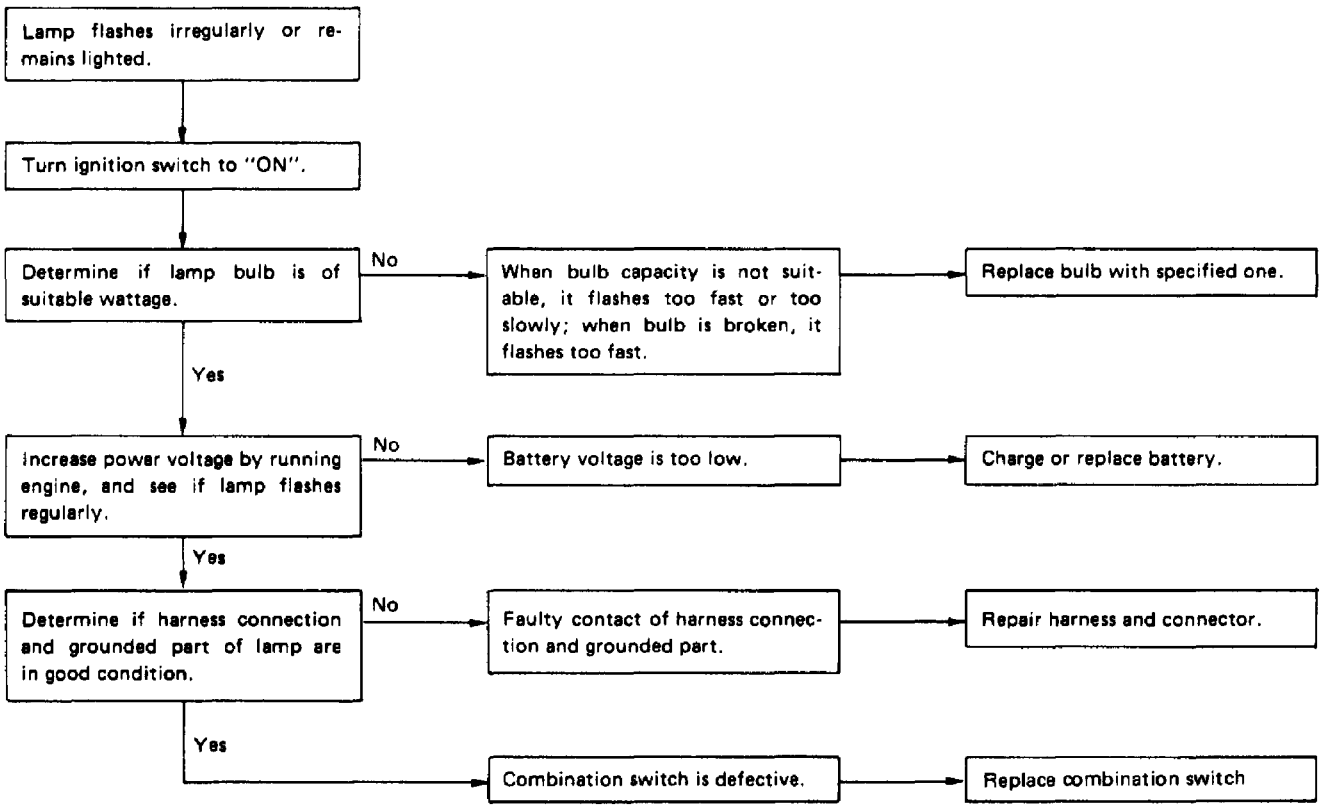

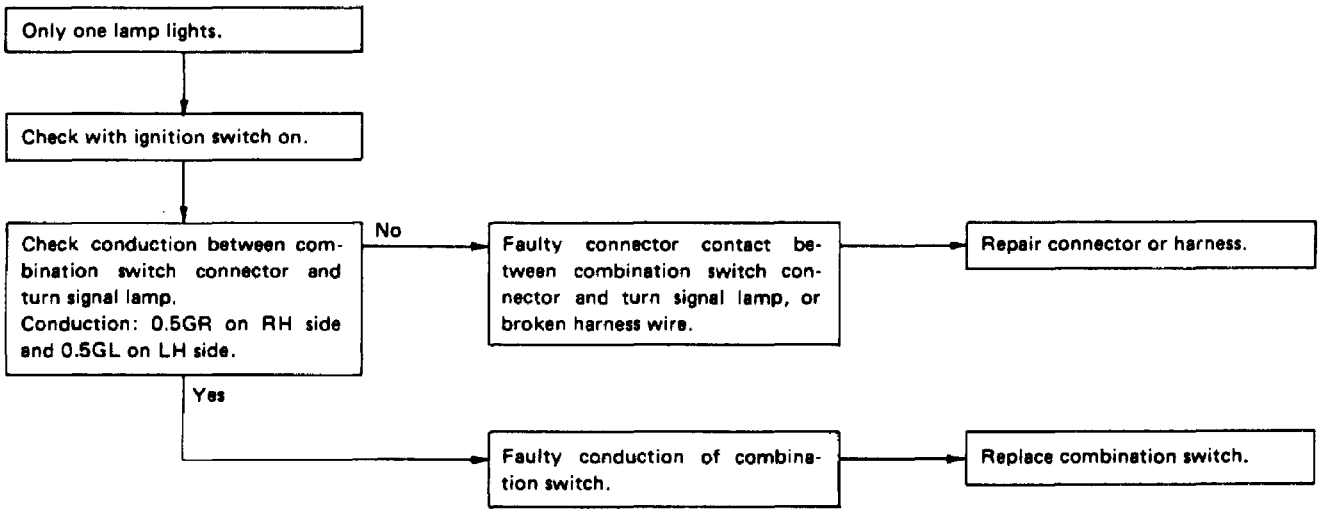

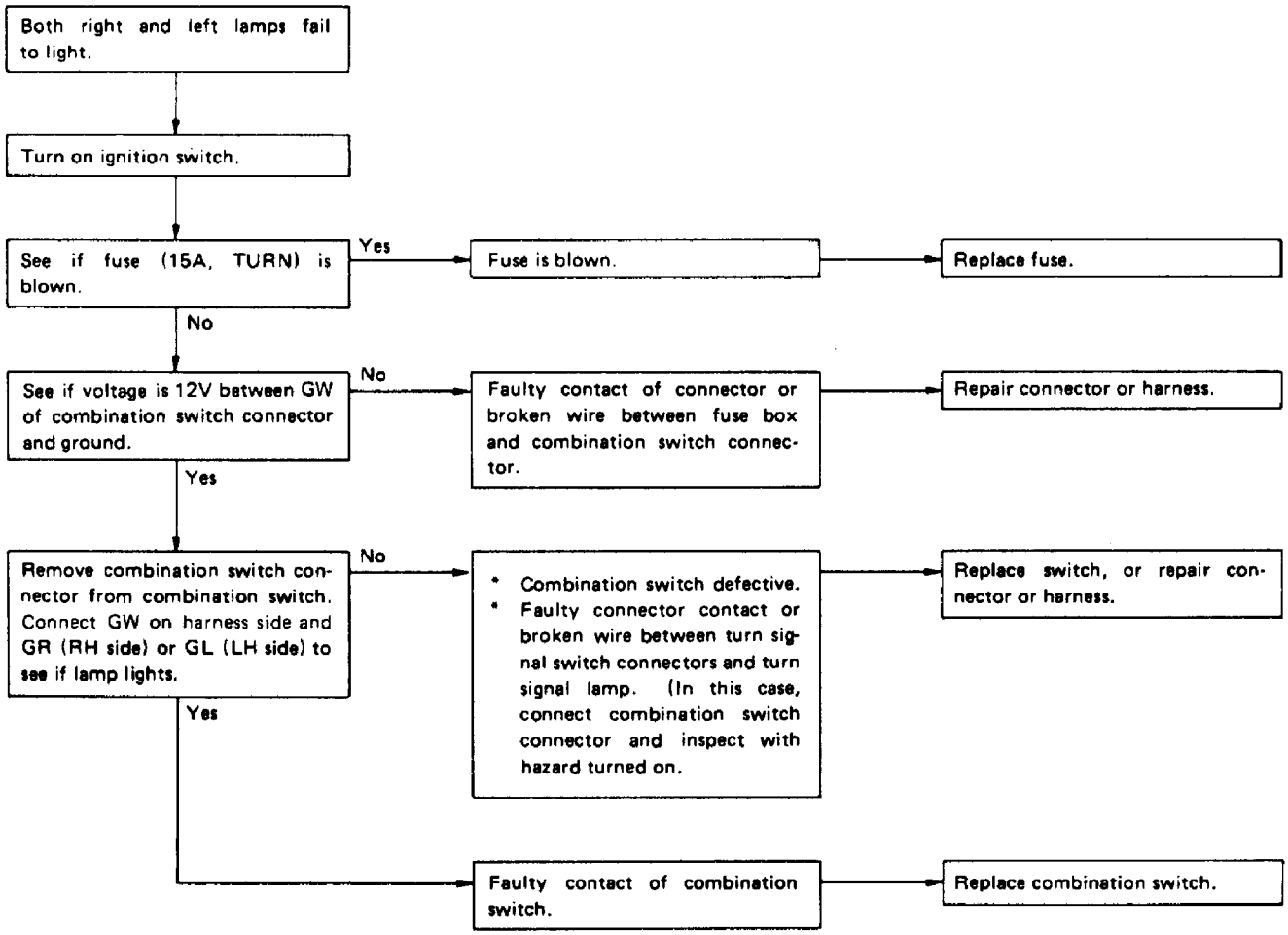
Both right and left lamps fail to light.
Turn on ignition switch.
See if fuse (15A, TURN) is blown.
Yes
Fuse is blown.
Replace fuse.
No
See if voltage is 12V between GW of combination switch connector and ground.
No
Faulty contact of connector or broken wire between fuse box and combination switch connector.
Repair connector or harness.
Yes
Remove combination switch connector from combination switch. Connect GW on harness side and GR (RH side) or GL (LH side) to see if lamp lights.
No
* Combination switch defective.
* Faulty connector contact or broken wire between turn signal switch connectors and turn signal lamp. (In this case, connect combination switch connector and inspect with hazard turned on.
Replace switch, or repair connector or harness.
Yes
Faulty contact of combination switch.
Replace combination switch.

2) Hazard Warning Light Switch and Turn Signal & Hazard Unit (With built-in combination switch)

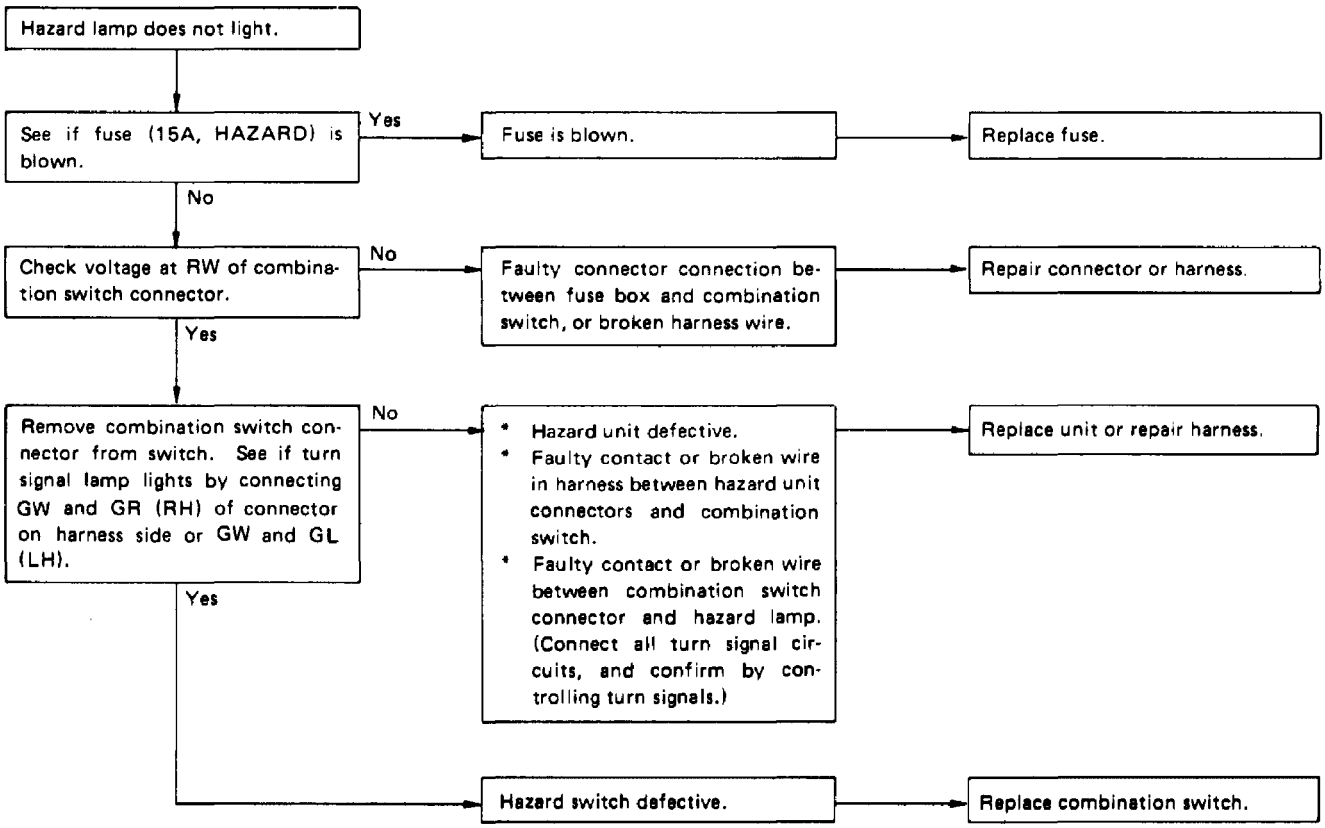

Back-Up Light

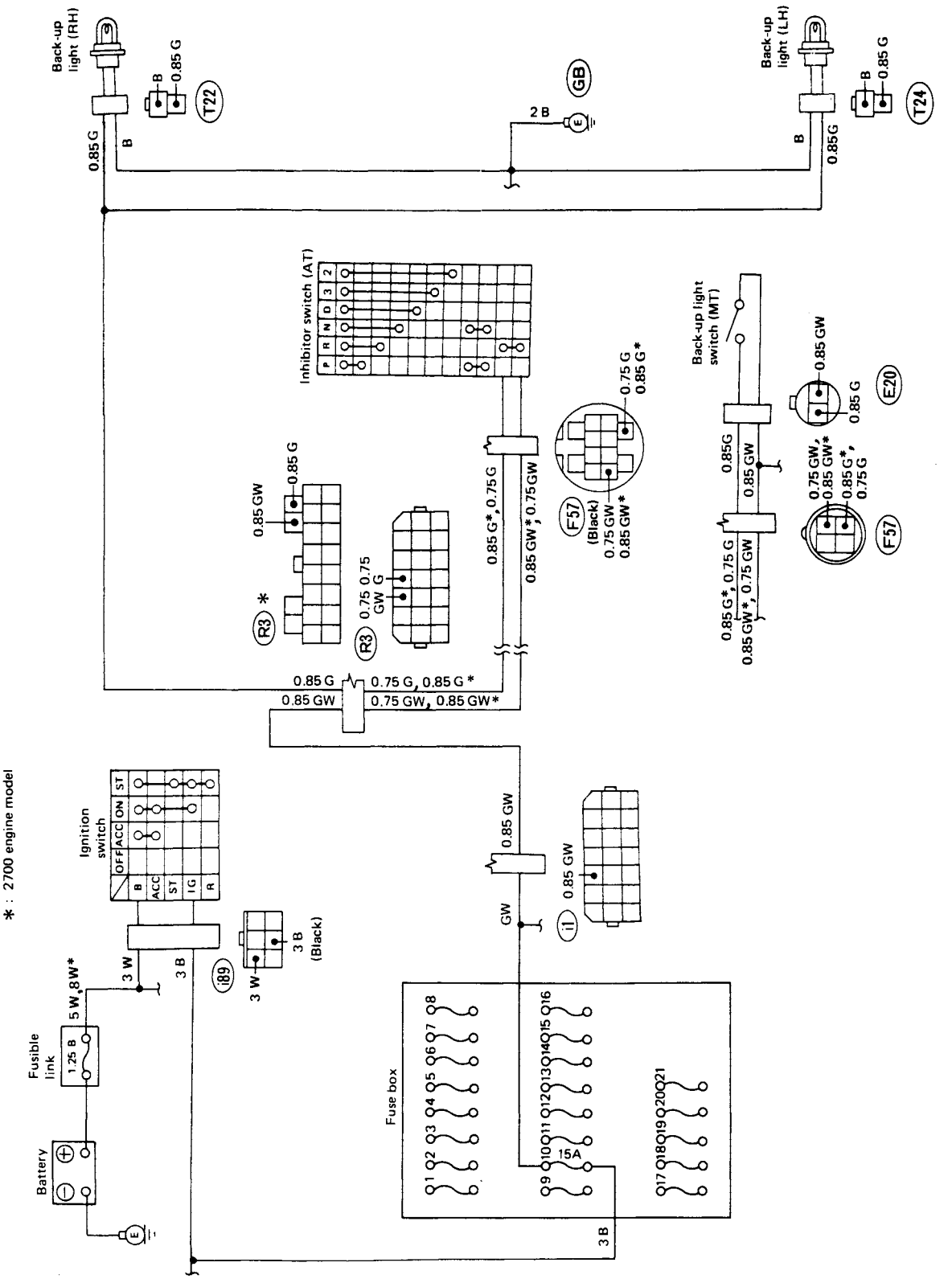

Fig. 41

L6-1729

Stop Light

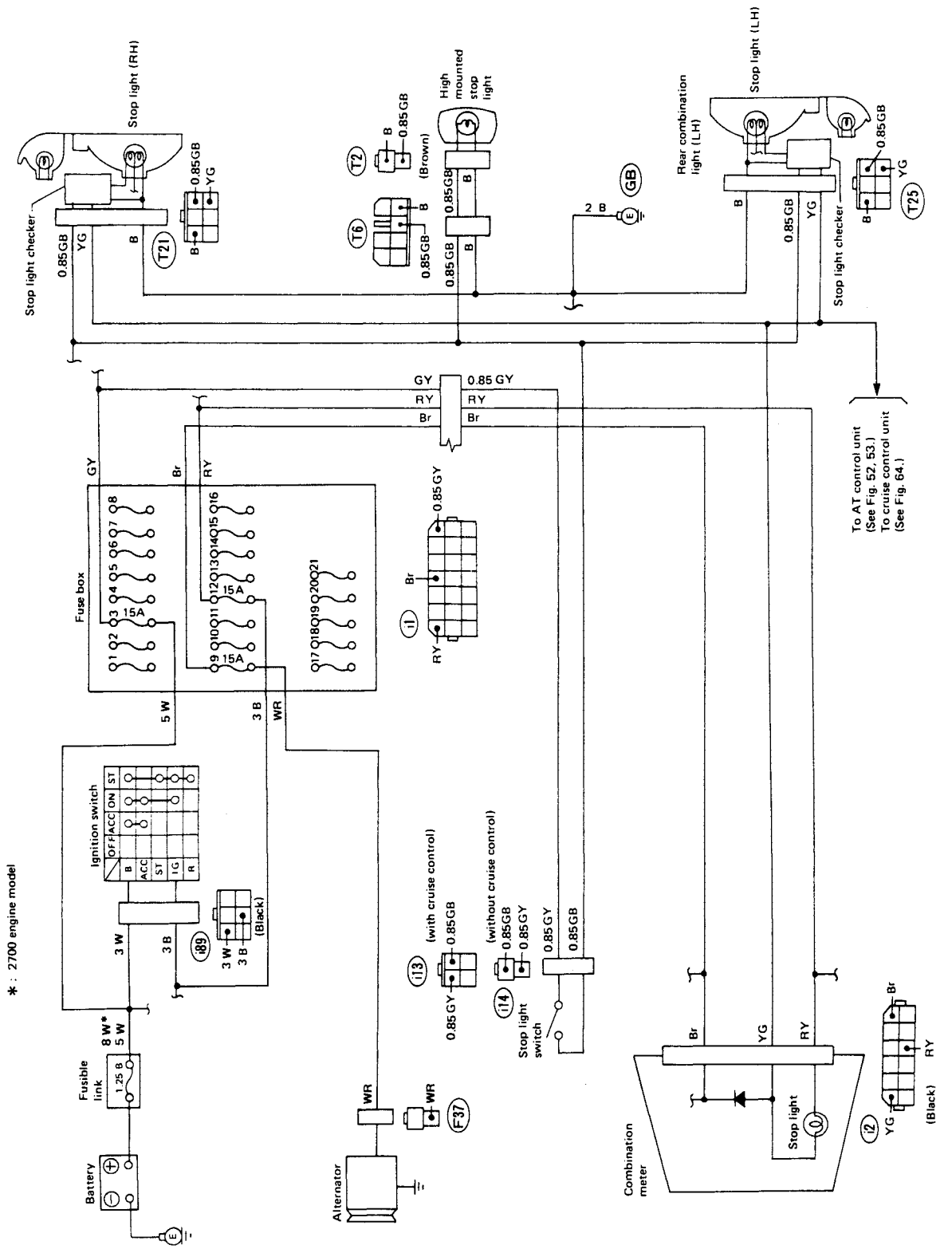

Fig. 42 L6-1730

(1) Warning pilot will not light even when key switch is turned on (with brake pedal released)

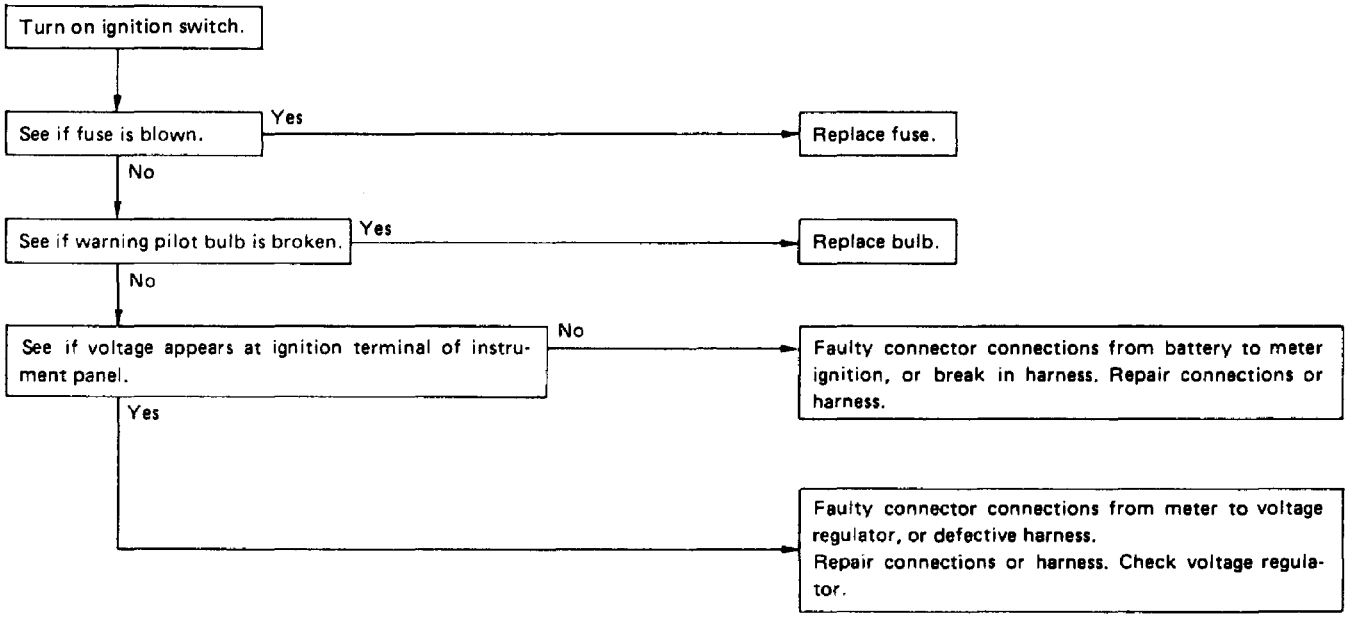

(2) Pilot lamp lights up during traveling (when brake pedal is depressed)

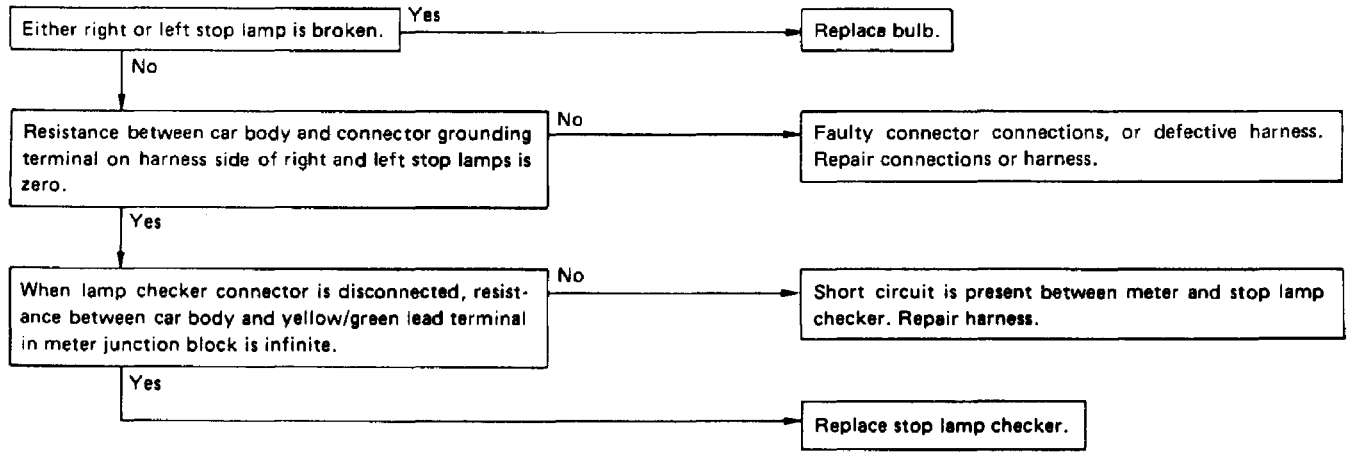

Room Light and Door Switch

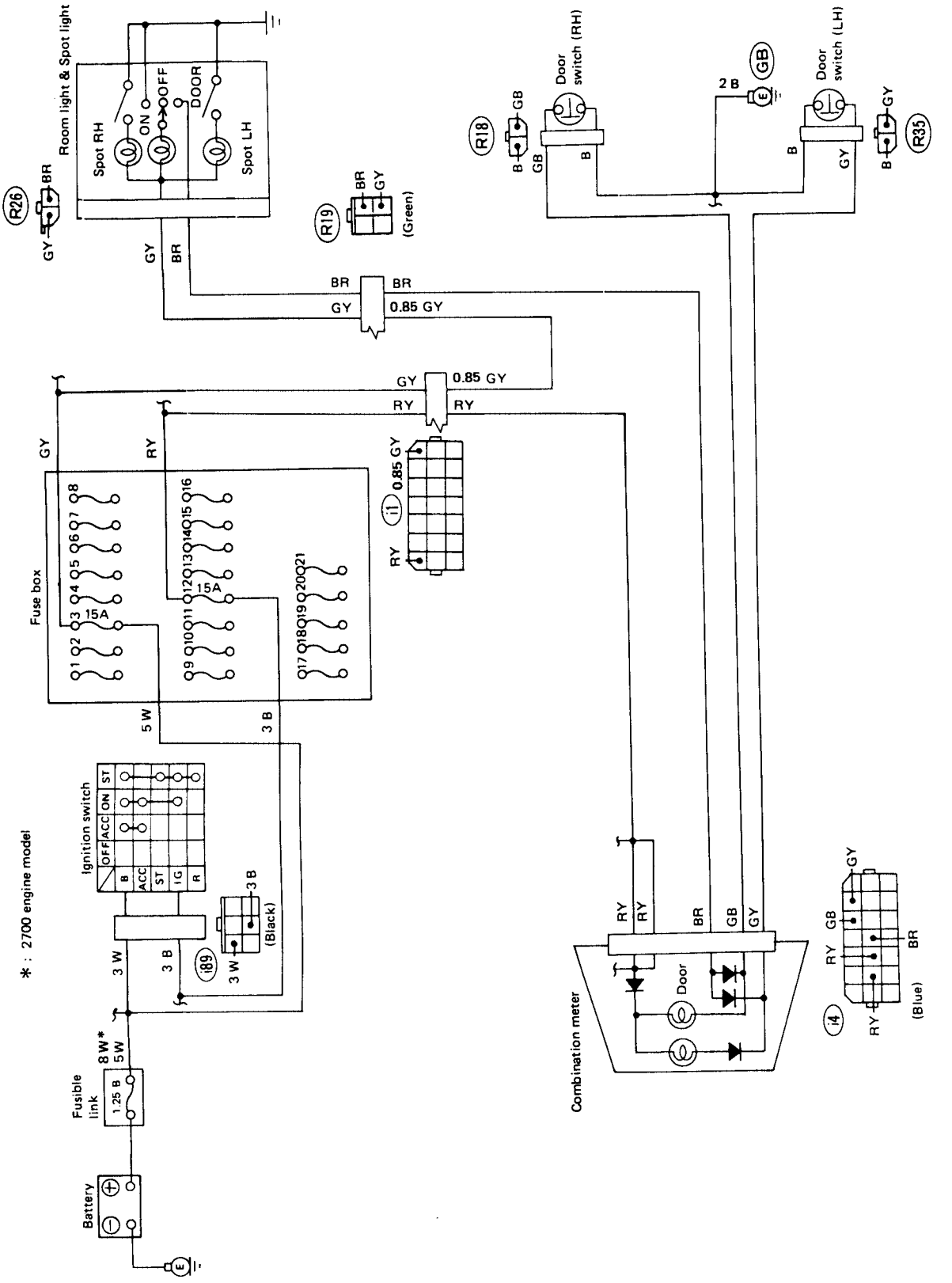

Fig. 43

L6-1731

1) Doors Ajar Warning System

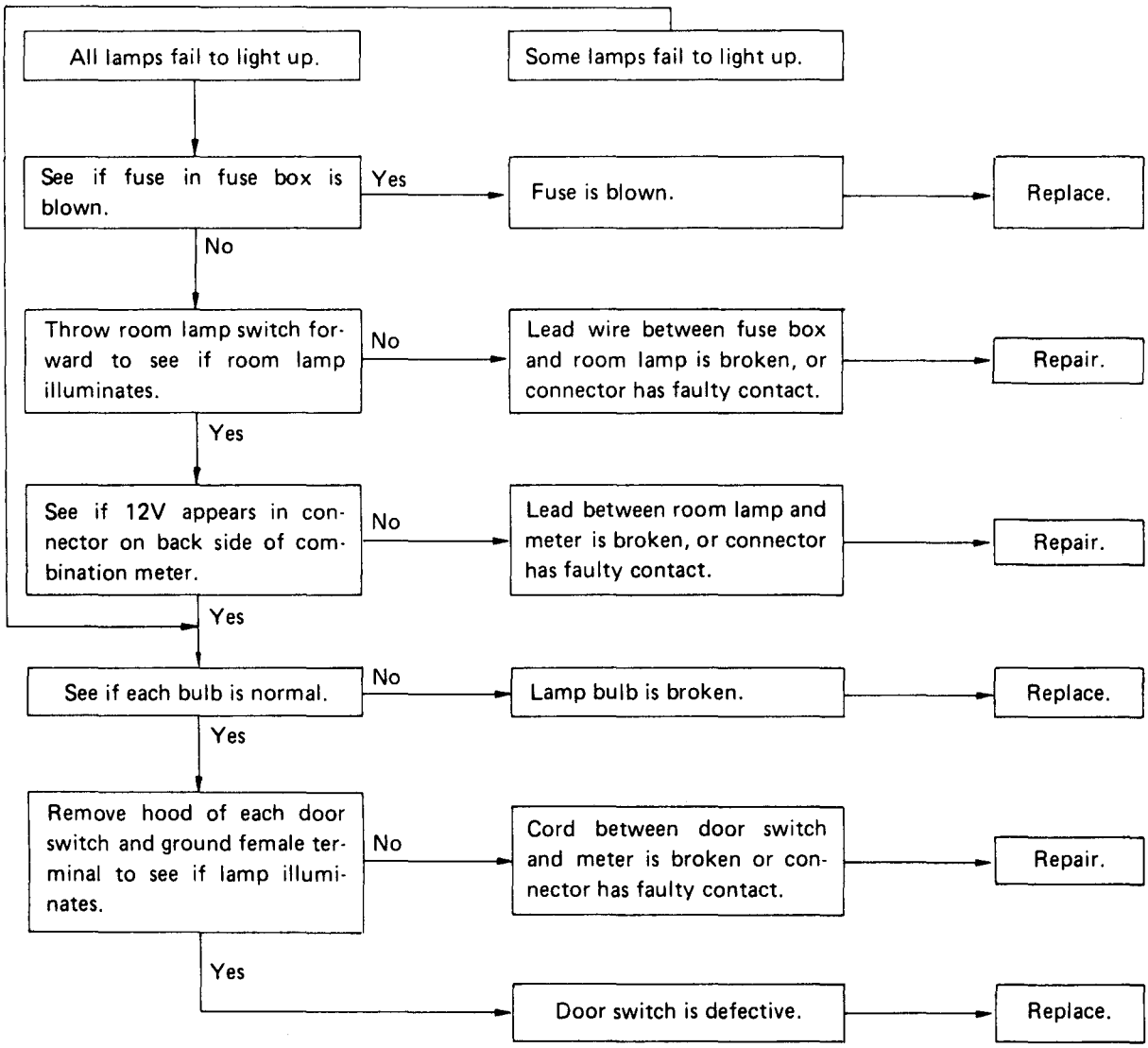

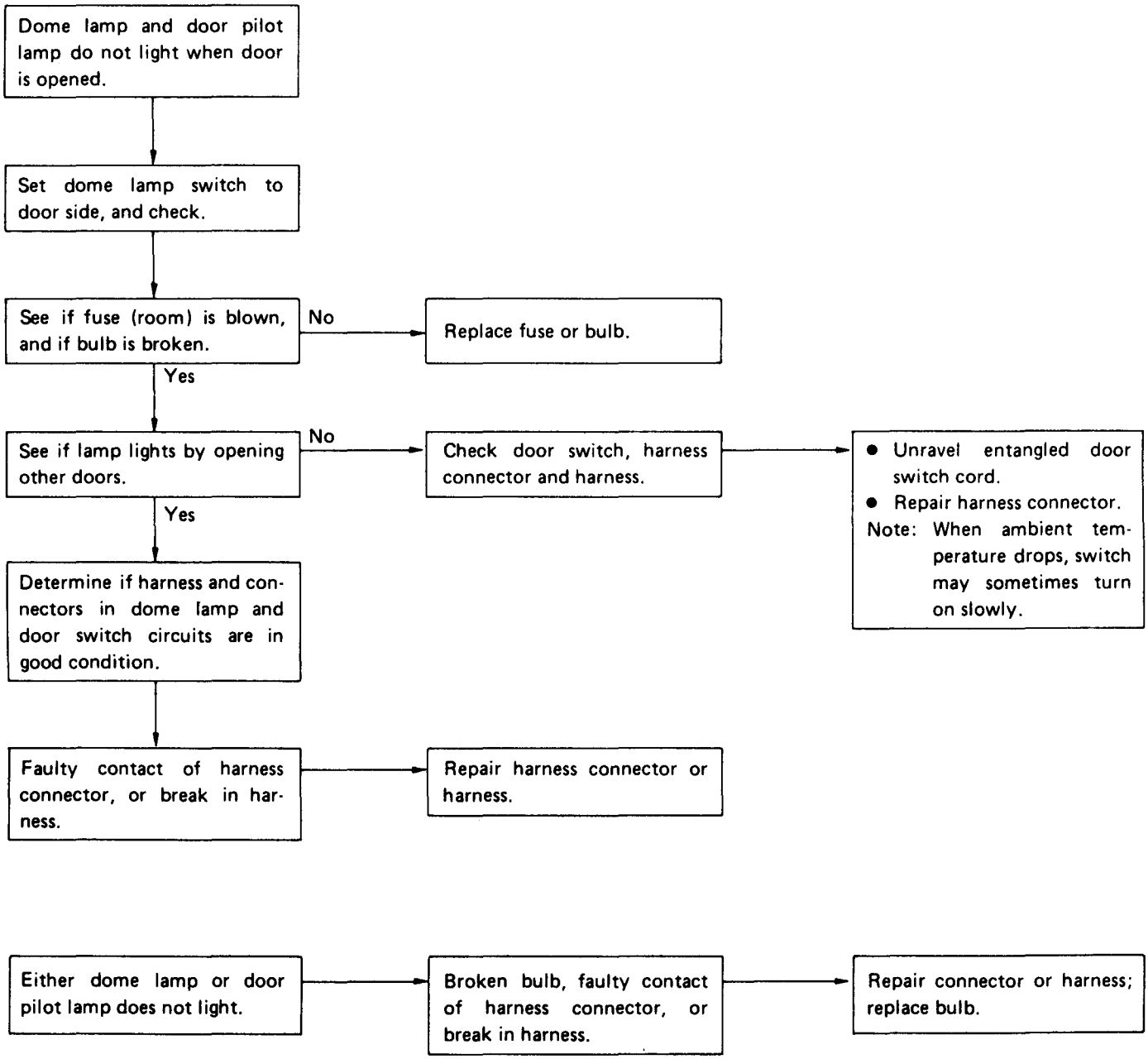
Dome lamp and door pilot lamp do not light when door is opened.
Set dome lamp switch to door side, and check.
See if fuse (room) is blown, and if bulb is broken.
No
Replace fuse or bulb.
Yes
See if lamp lights by opening other doors.
No
Check door switch, harness connector and harness.
• Unravel entangled door switch cord.
• Repair harness connector.
Note: When ambient temperature drops, switch may sometimes turn on slowly.
Yes
Determine if harness and connectors in dome lamp and door switch circuits are in good condition.
Faulty contact of harness connector, or break in harness.
Repair harness connector or harness.
Either dome lamp or door pilot lamp does not light.
Broken bulb, faulty contact of harness connector, or break in harness.
Repair connector or harness; replace bulb.

Trunk Room Light

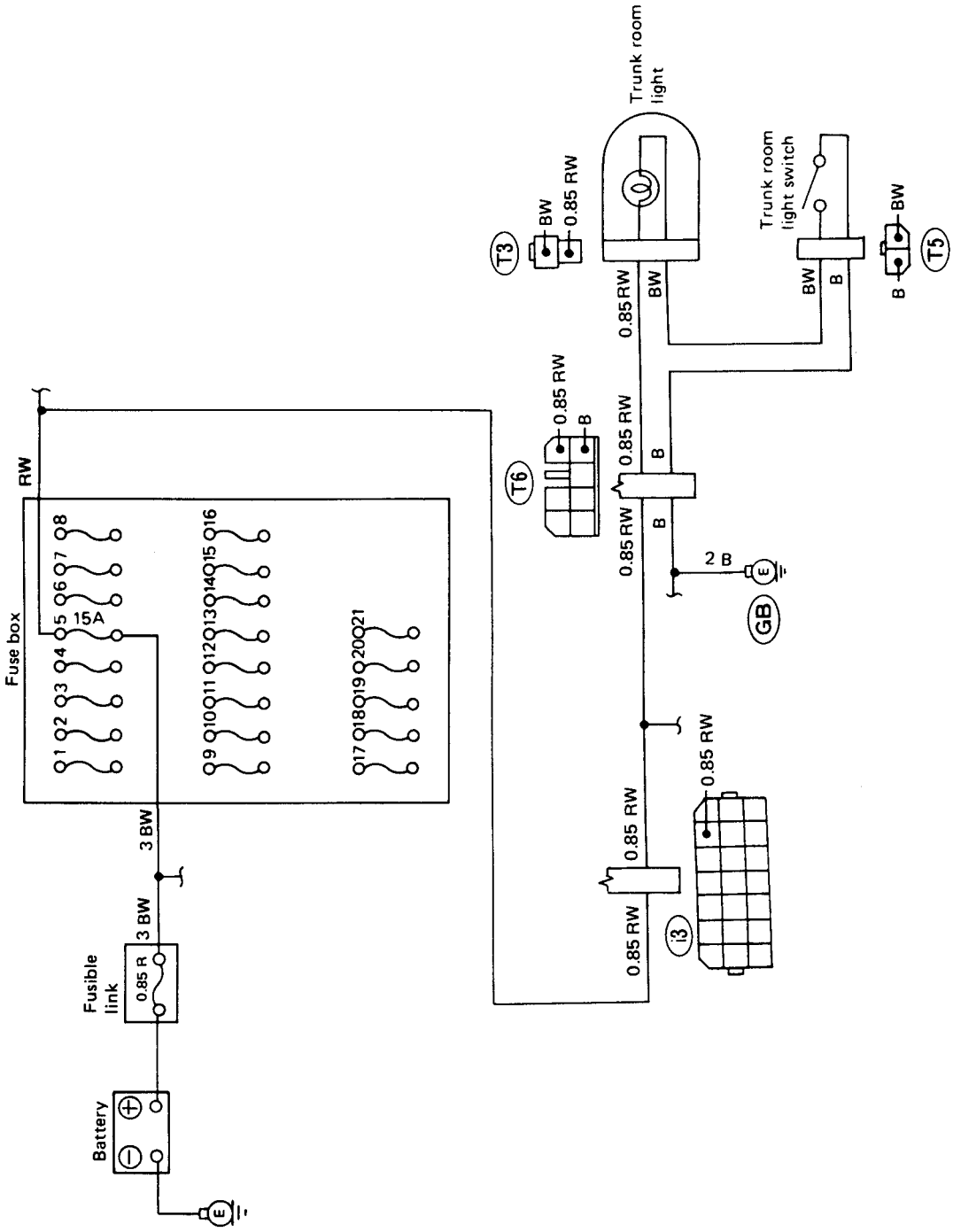

Fig. 44

L6-1732

Seat Belt and Key Warning System

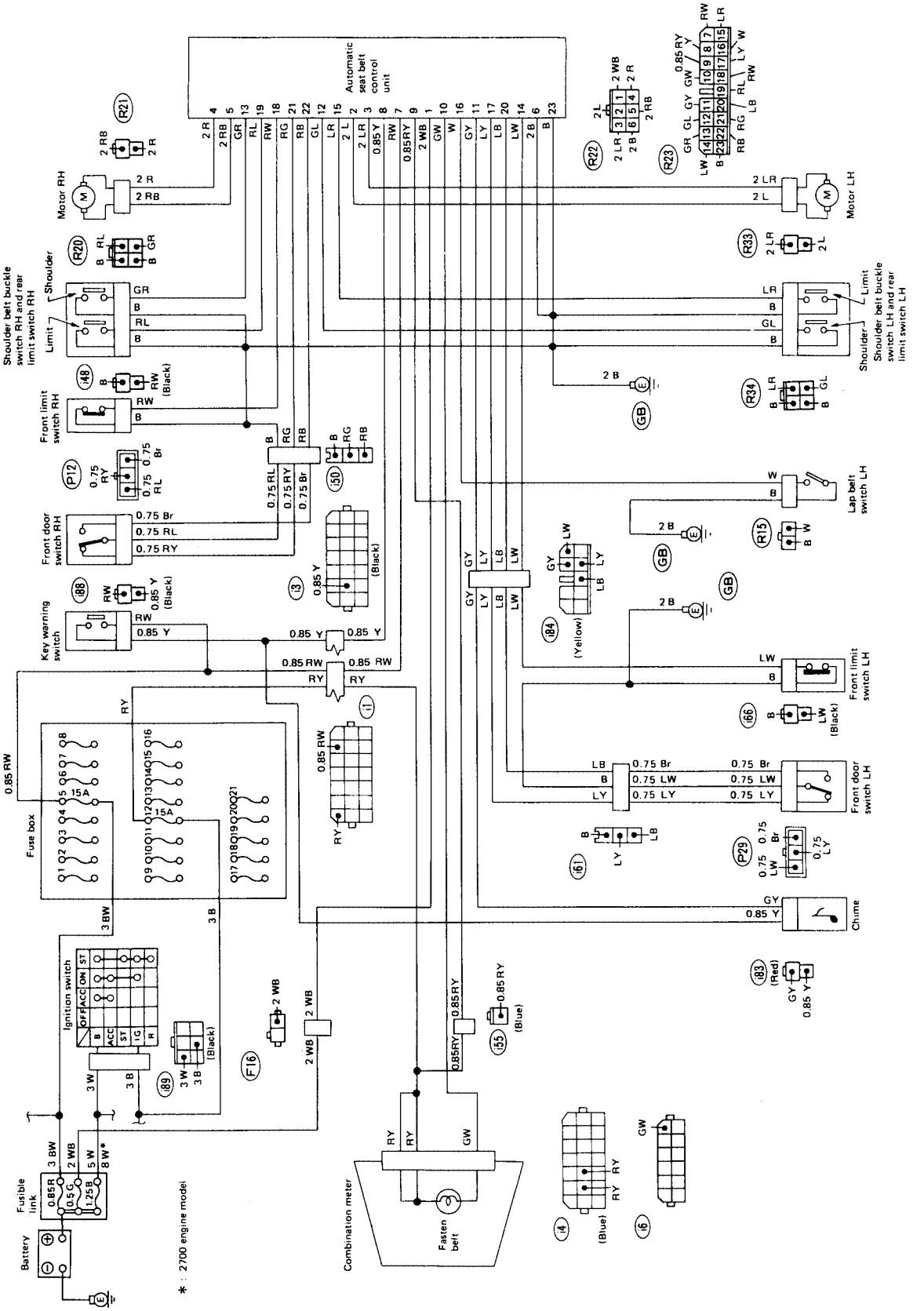

Fig. 45 Automatic seat belt

L6-1733

General

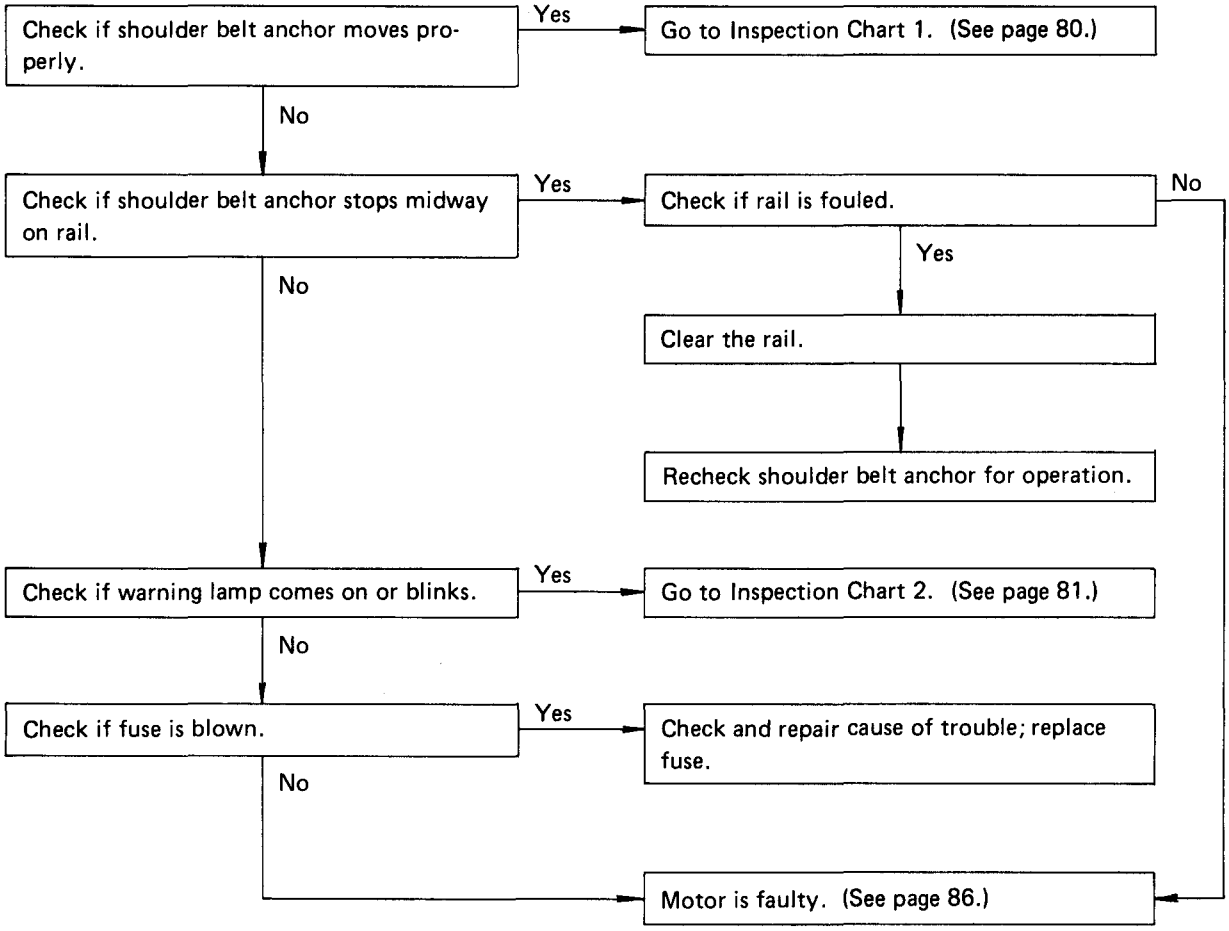

After repairs, always disconnect battery cables and then reconnect them.
Otherwise, the computer will not function properly.

INSPECTION CHART 1

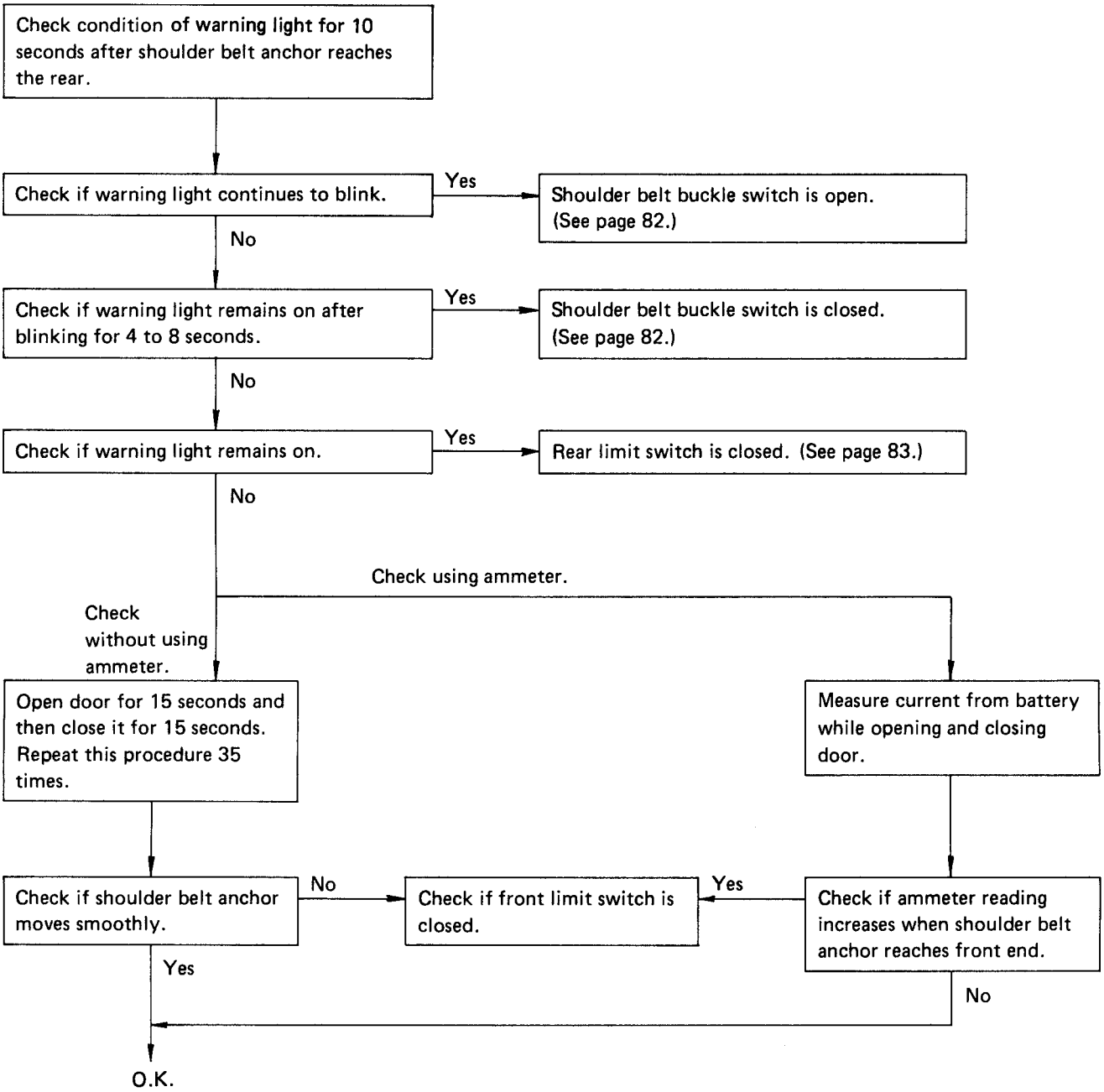

INSPECTION CHART 2

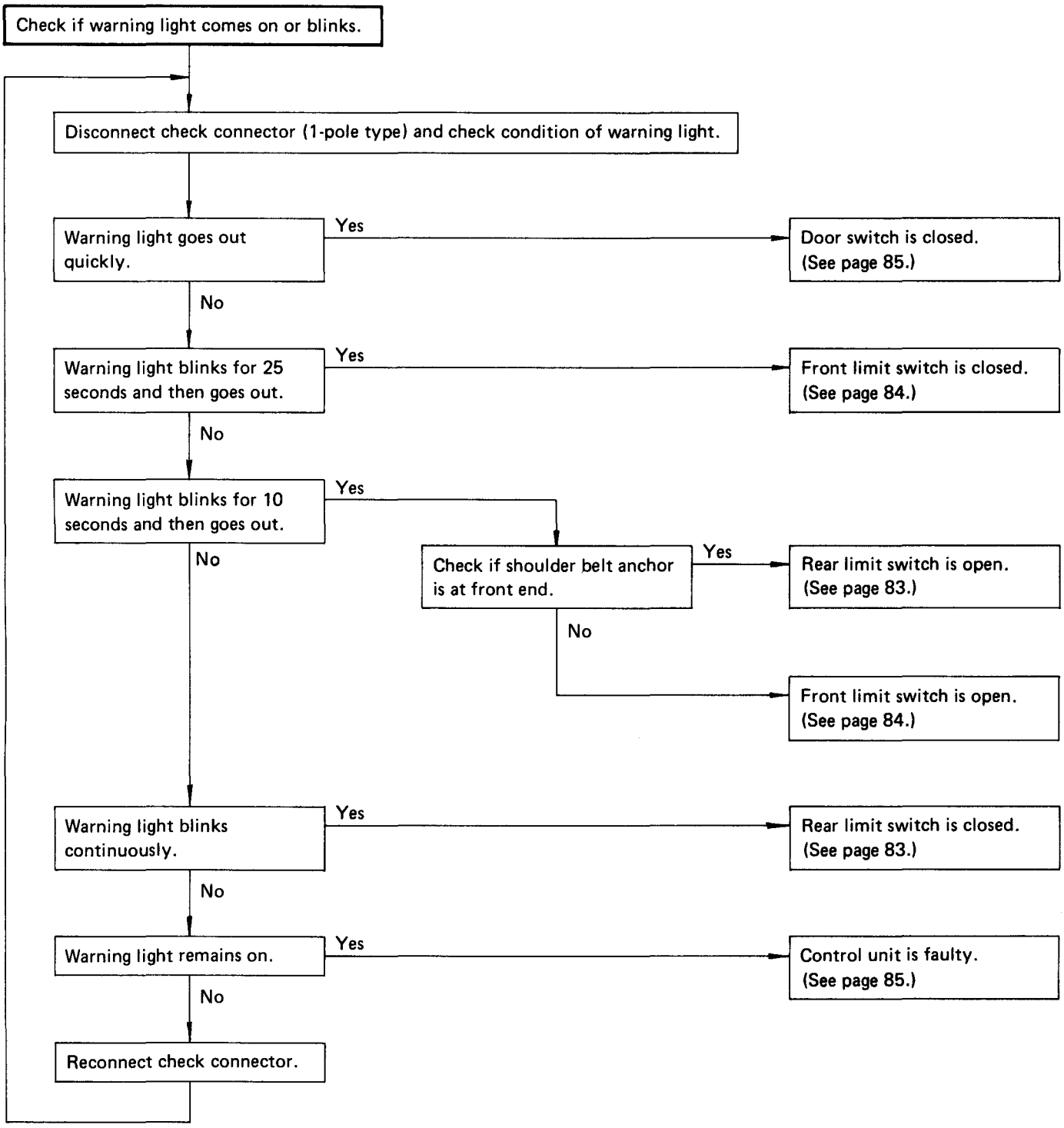

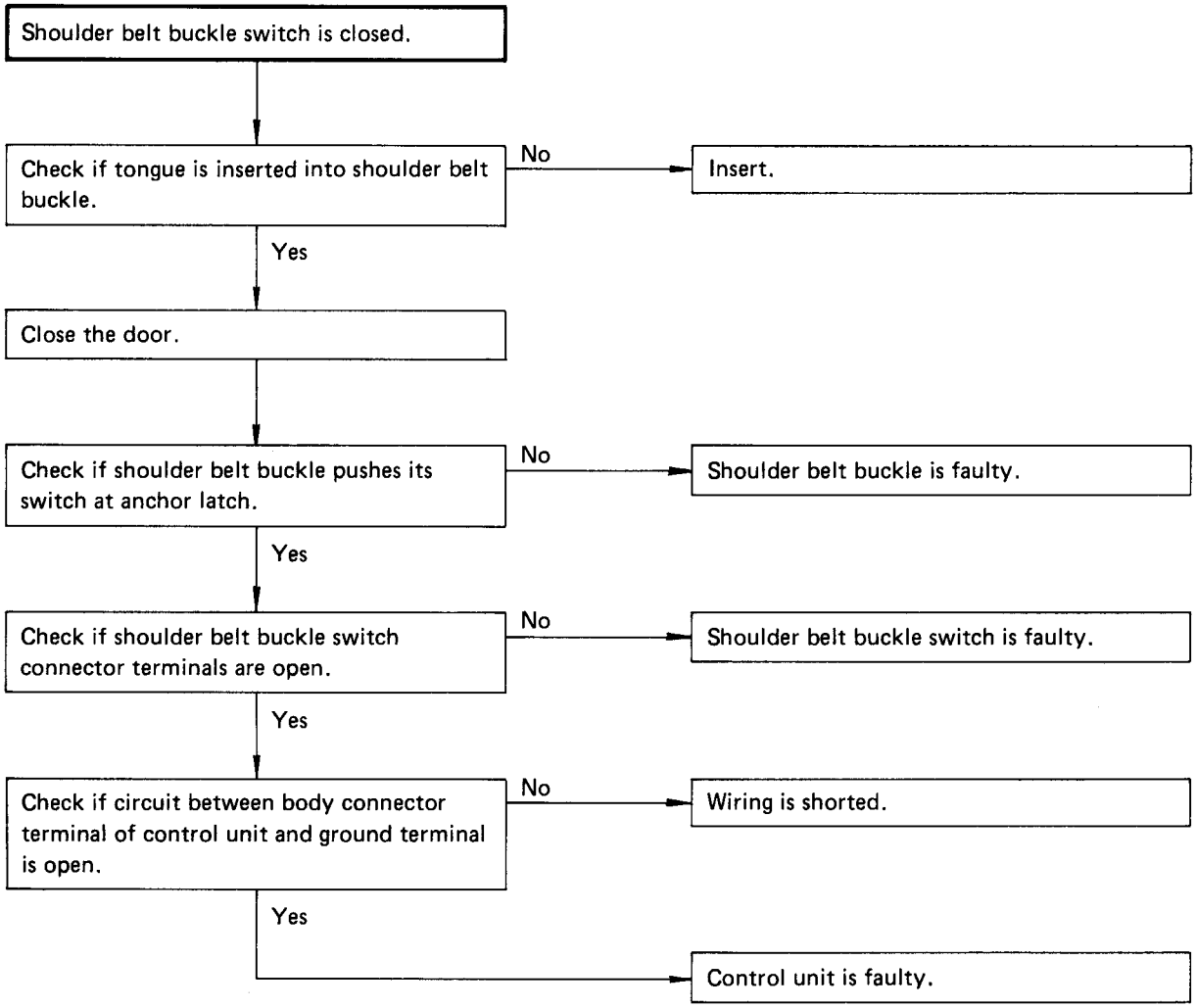
Shoulder belt buckle switch is closed.
Check if tongue is inserted into shoulder belt buckle.
No
Insert.
Yes
Close the door.
Check if shoulder belt buckle pushes its switch at anchor latch.
No
Shoulder belt buckle is faulty.
Yes
Check if shoulder belt buckle switch connector terminals are open.
No
Shoulder belt buckle switch is faulty.
Yes
Check if circuit between body connector terminal of control unit and ground terminal is open.
No
Wiring is shorted.
Yes
Control unit is faulty.

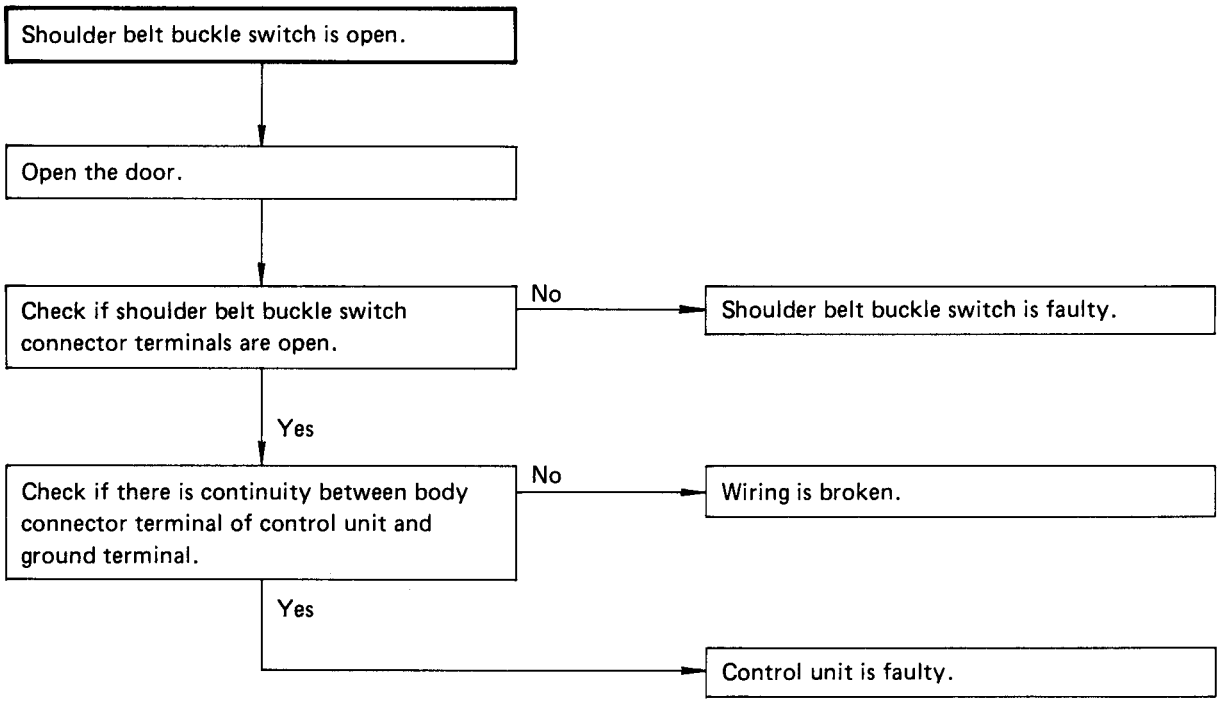
Shoulder belt buckle switch is open.
Open the door.
Check if shoulder belt buckle switch connector terminals are open.
No
Shoulder belt buckle switch is faulty.
Yes
Check if there is continuity between body connector terminal of control unit and ground terminal.
No
Wiring is broken.
Yes
Control unit is faulty.

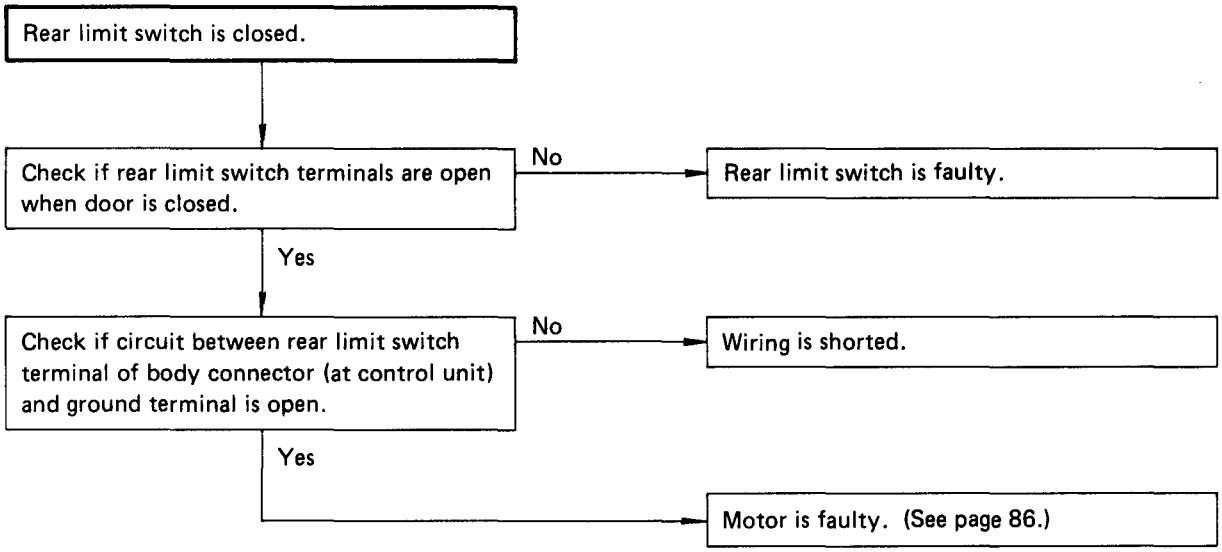
Rear limit switch is closed.
Check if rear limit switch terminals are open when door is closed.
No
Rear limit switch is faulty.
Yes
Check if circuit between rear limit switch terminal of body connector (at control unit) and ground terminal is open.
No
Wiring is shorted.
Yes
Motor is faulty. (See page 86.)

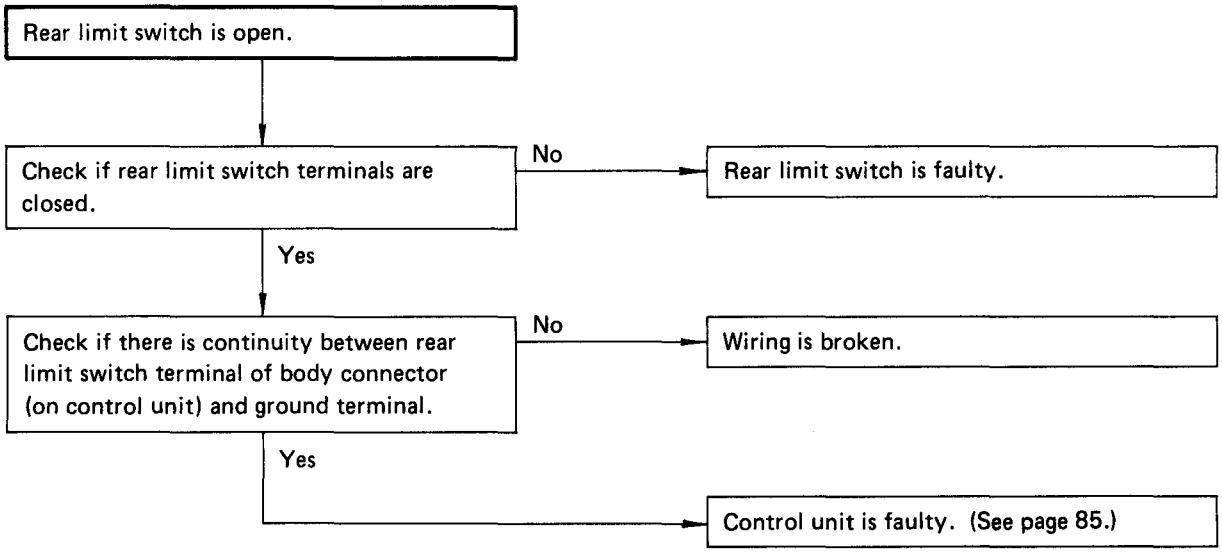
Rear limit switch is open.
Check if rear limit switch terminals are closed.
No
Rear limit switch is faulty.
Yes
Check if there is continuity between rear limit switch terminal of body connector (on control unit) and ground terminal.
No
Wiring is broken.
Yes
Control unit is faulty. (See page 85.)

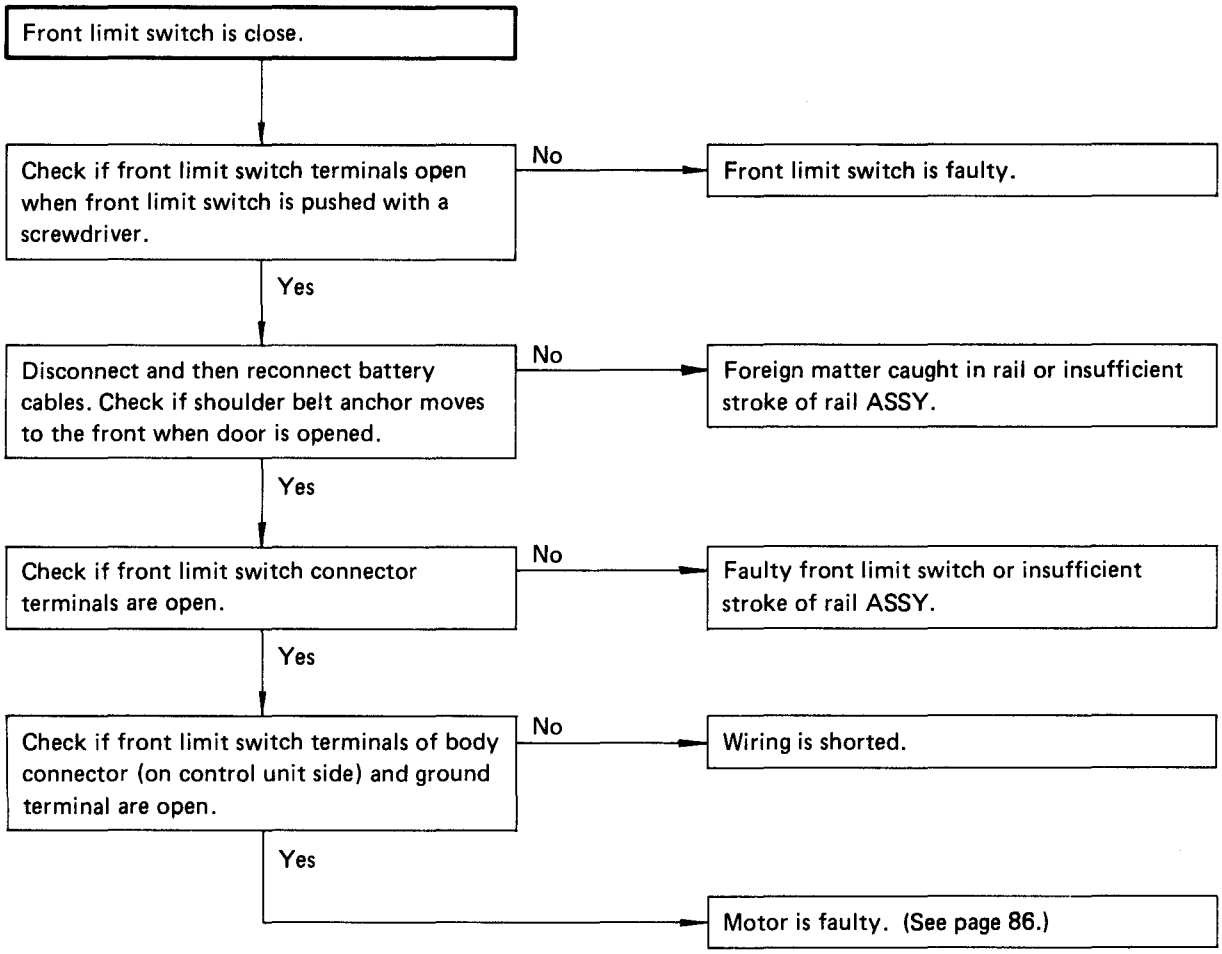
Front limit switch is close.
Check if front limit switch terminals open when front limit switch is pushed with a screwdriver.
No
Front limit switch is faulty.
Yes
Disconnect and then reconnect battery cables. Check if shoulder belt anchor moves to the front when door is opened.
No
Foreign matter caught in rail or insufficient stroke of rail ASSY.
Yes
Check if front limit switch connector terminals are open.
No
Faulty front limit switch or insufficient stroke of rail ASSY.
Yes
Check if front limit switch terminals of body connector (on control unit side) and ground terminal are open.
No
Wiring is shorted.
Yes
Motor is faulty. (See page 86.)

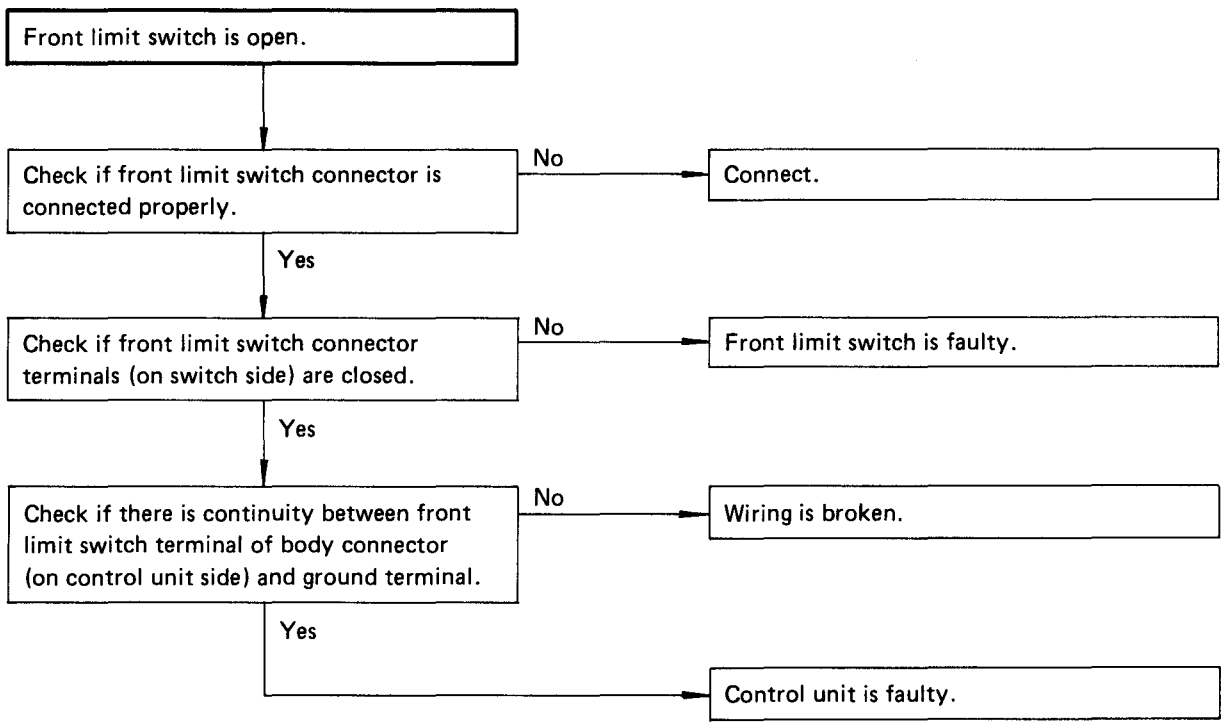
Front limit switch is open.
Check if front limit switch connector is connected properly.
No
Connect.
Yes
Check if front limit switch connector terminals (on switch side) are closed.
No
Front limit switch is faulty.
Yes
Check if there is continuity between front limit switch terminal of body connector (on control unit side) and ground terminal.
No
Wiring is broken.
Yes
Control unit is faulty.

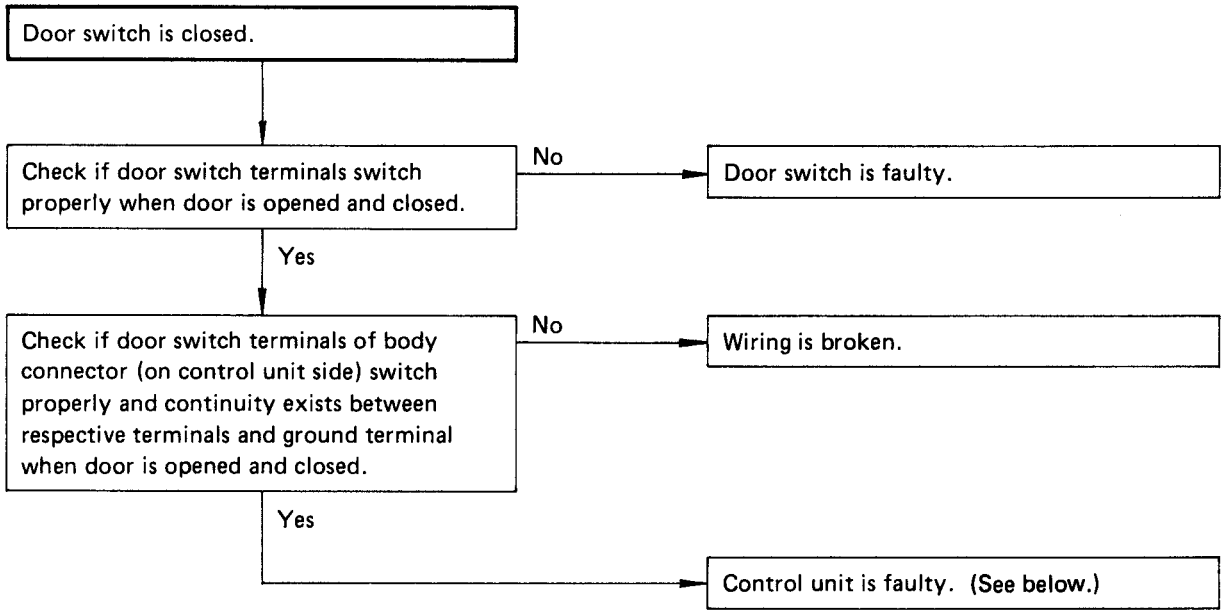
Door switch is closed.
Check if door switch terminals switch properly when door is opened and closed.
No
Door switch is faulty.
Yes
Check if door switch terminals of body connector (on control unit side) switch properly and continuity exists between respective terminals and ground terminal when door is opened and closed.
No
Wiring is broken.
Yes
Control unit is faulty. (See below.)

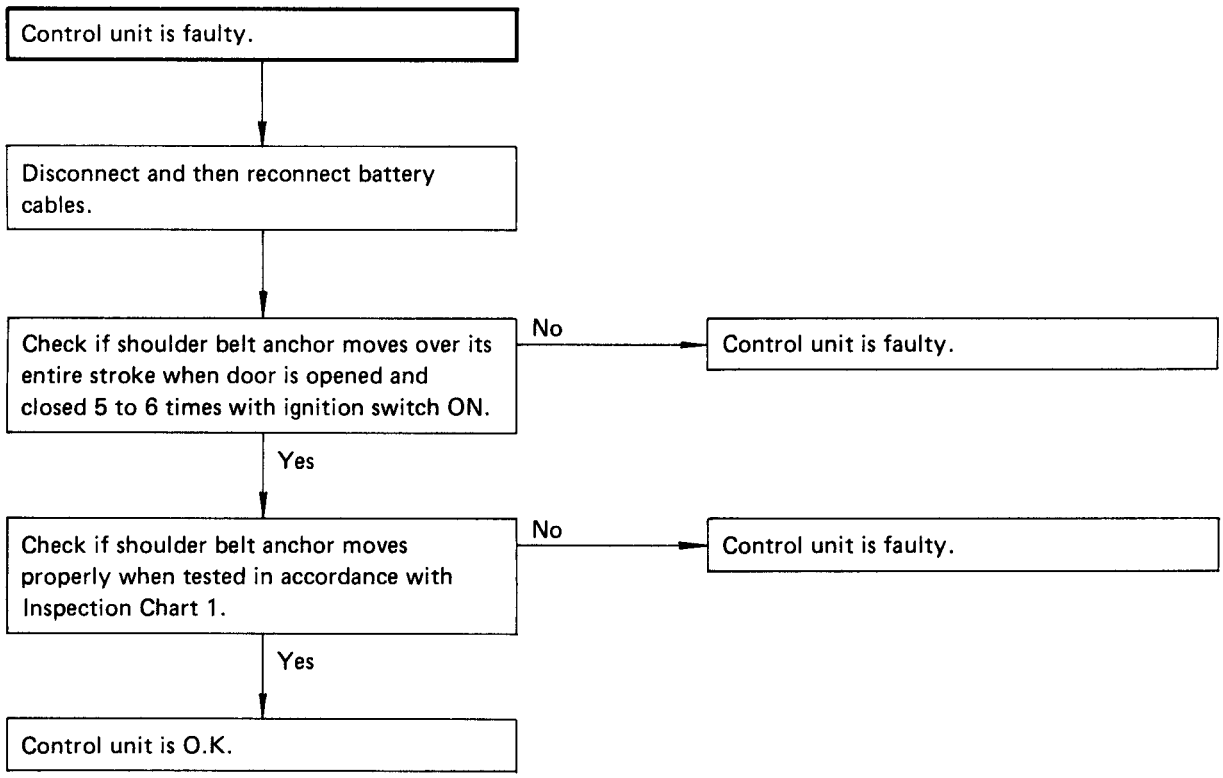
Control unit is faulty.
Disconnect and then reconnect battery cables.
Check if shoulder belt anchor moves over its entire stroke when door is opened and closed 5 to 6 times with ignition switch ON.
No
Control unit is faulty.
Yes
Check if shoulder belt anchor moves properly when tested in accordance with Inspection Chart 1.
No
Control unit is faulty.
Yes
Control unit is O.K.

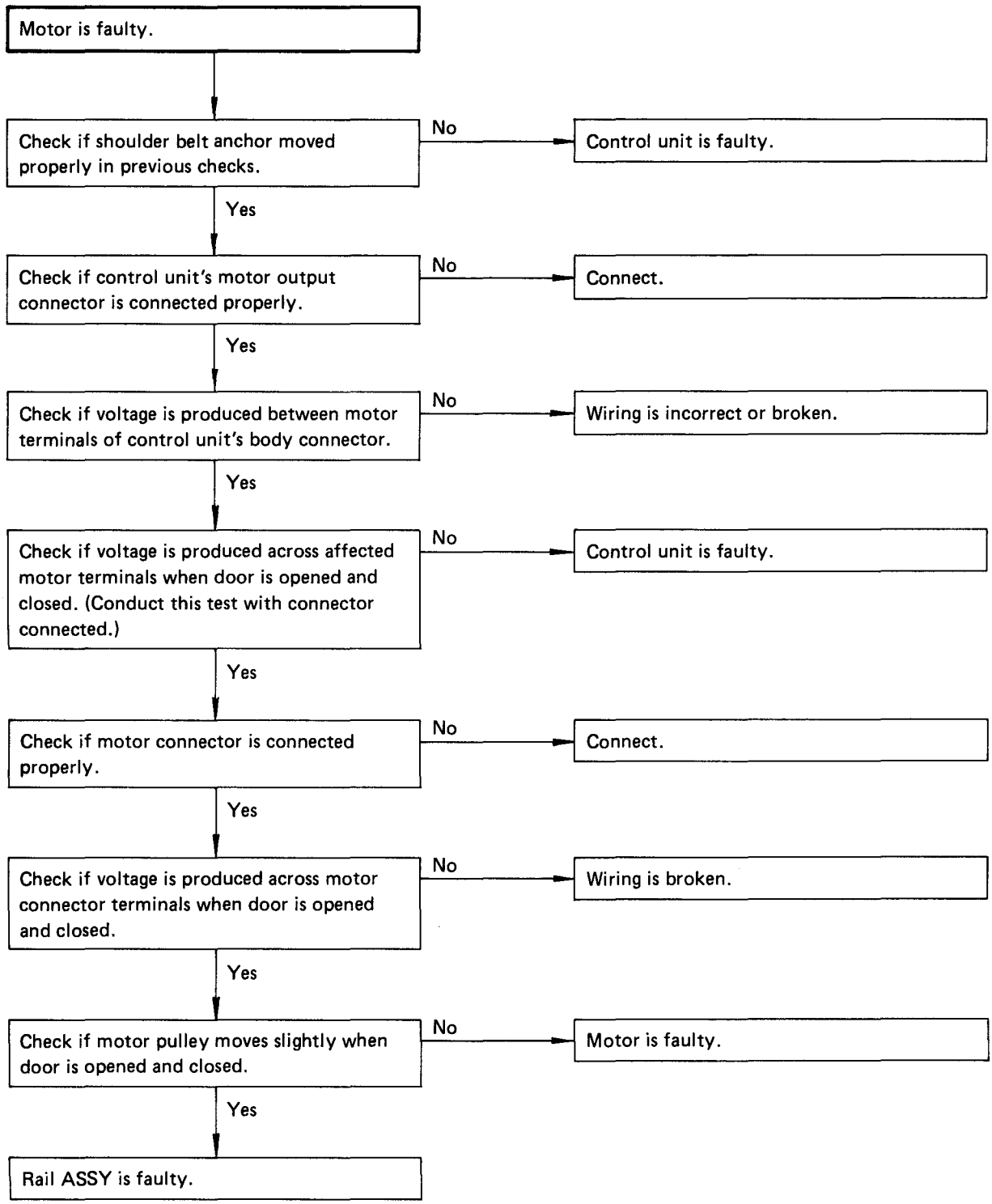
Motor is faulty.
Check if shoulder belt anchor moved properly in previous checks.
No
Control unit is faulty.
Yes
Check if control unit's motor output connector is connected properly.
No
Connect.
Yes
Check if voltage is produced between motor terminals of control unit's body connector.
No
Wiring is incorrect or broken.
Yes
Check if voltage is produced across affected motor terminals when door is opened and closed. (Conduct this test with connector connected.)
No
Control unit is faulty.
Yes
Check if motor connector is connected properly.
No
Connect.
Yes
Check if voltage is produced across motor connector terminals when door is opened and closed.
No
Wiring is broken.
Yes
Check if motor pulley moves slightly when door is opened and closed.
No
Motor is faulty.
Yes
Rail ASSY is faulty.

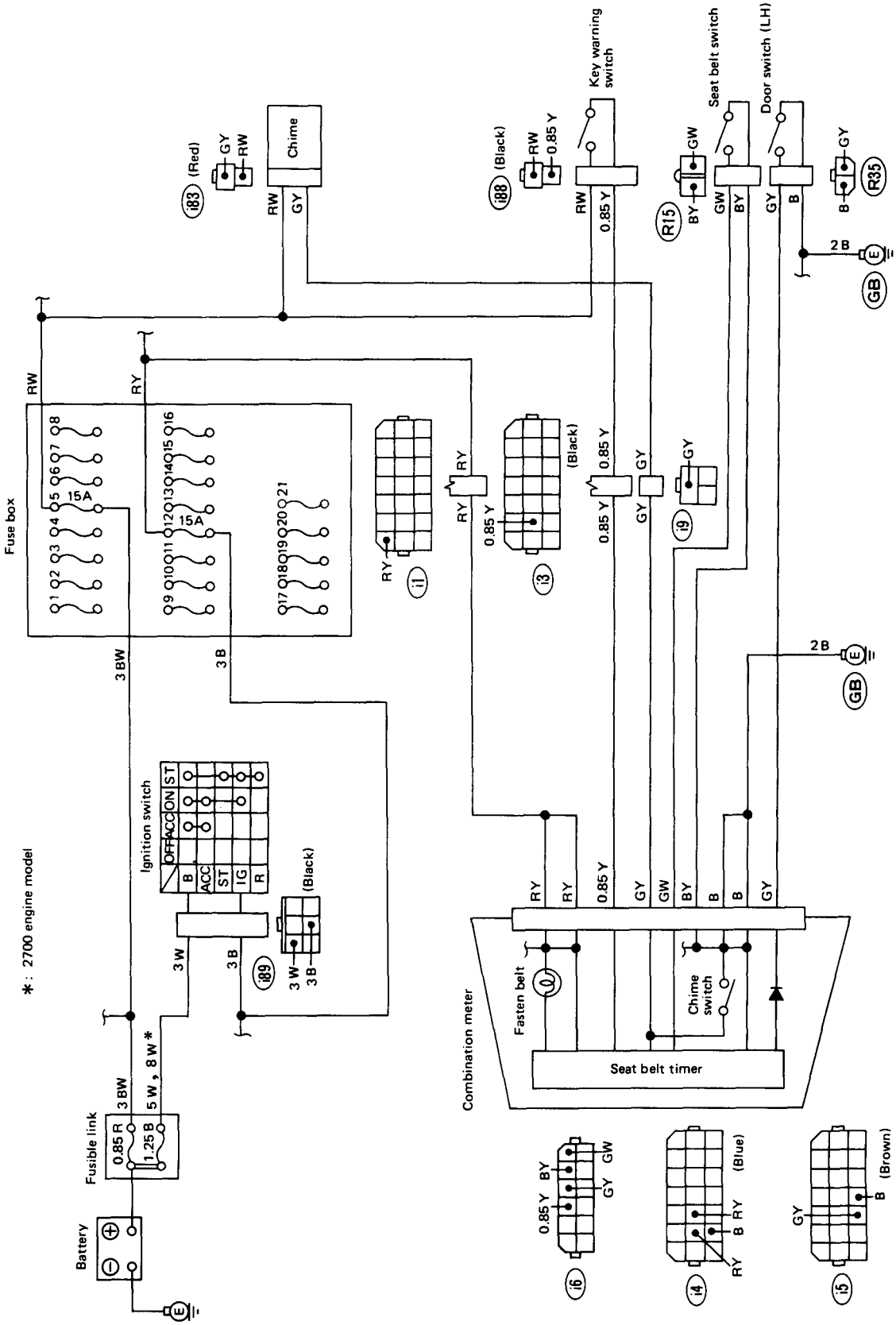

Fig. 46 Seat belt and key warning system — [Canada model]

L6-1734

(1) When chime does not sound and also fasten seat belt warning light does not turn on;

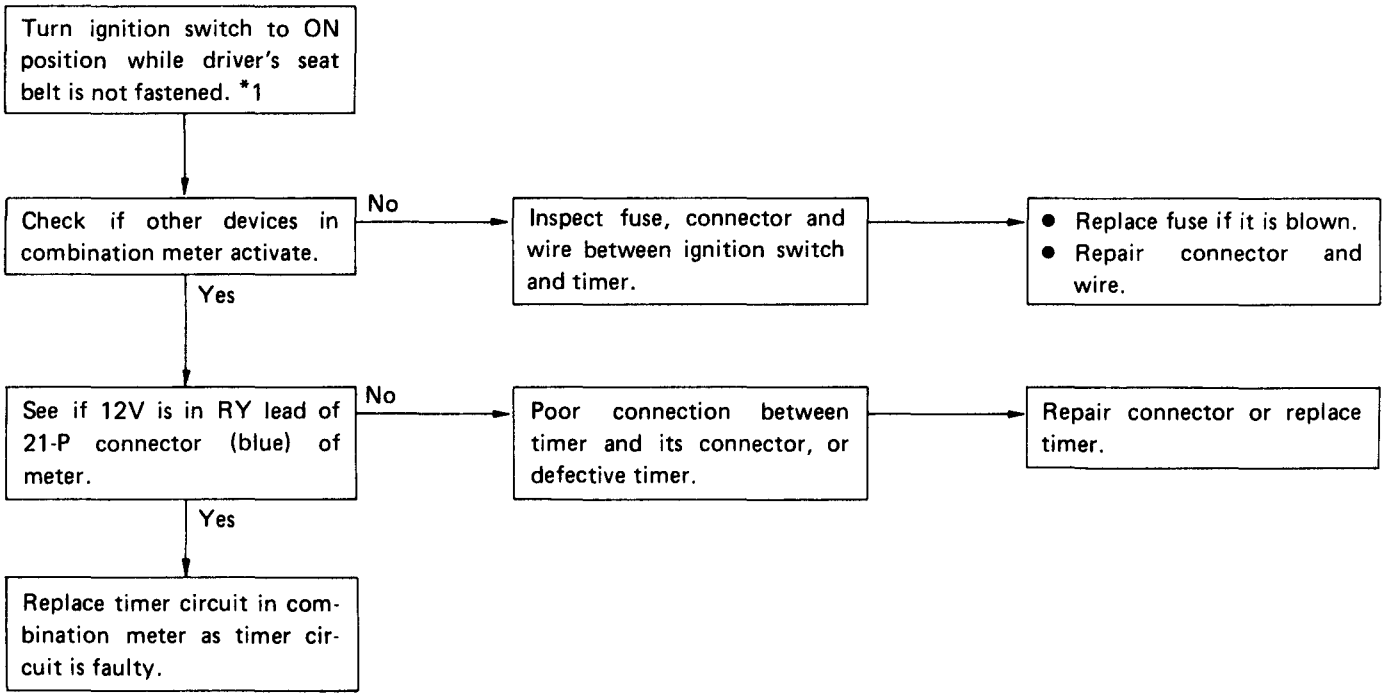

*1: Never leave the switch in ON position all the way.

(2) When chime does not sound, but fasten seat belt warning light turns on;

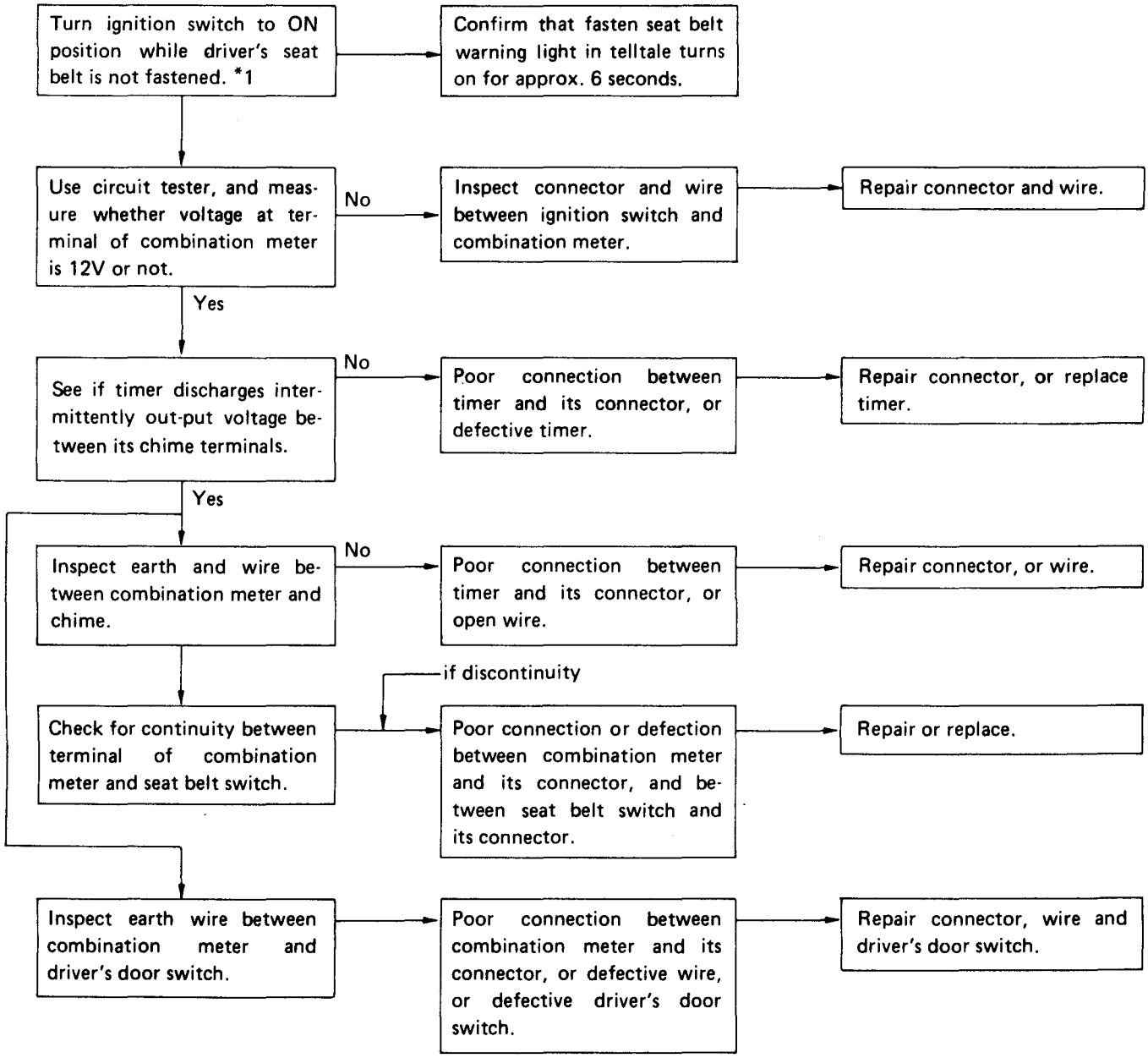

*1: Never leave the switch in ON position all the way.

(3) When fasten seat belt warning light does not turn on, but chime sounds;

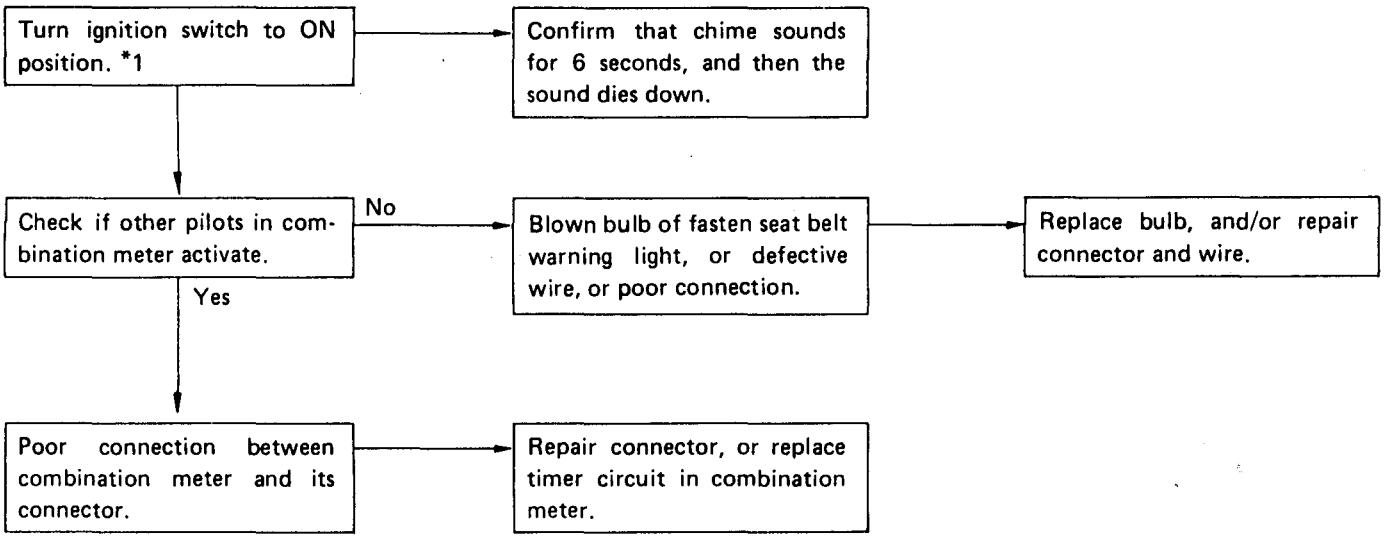

*1: Never leave the switch in ON position all the way.

Electronic-Controlled Motor Drive Power Steering System

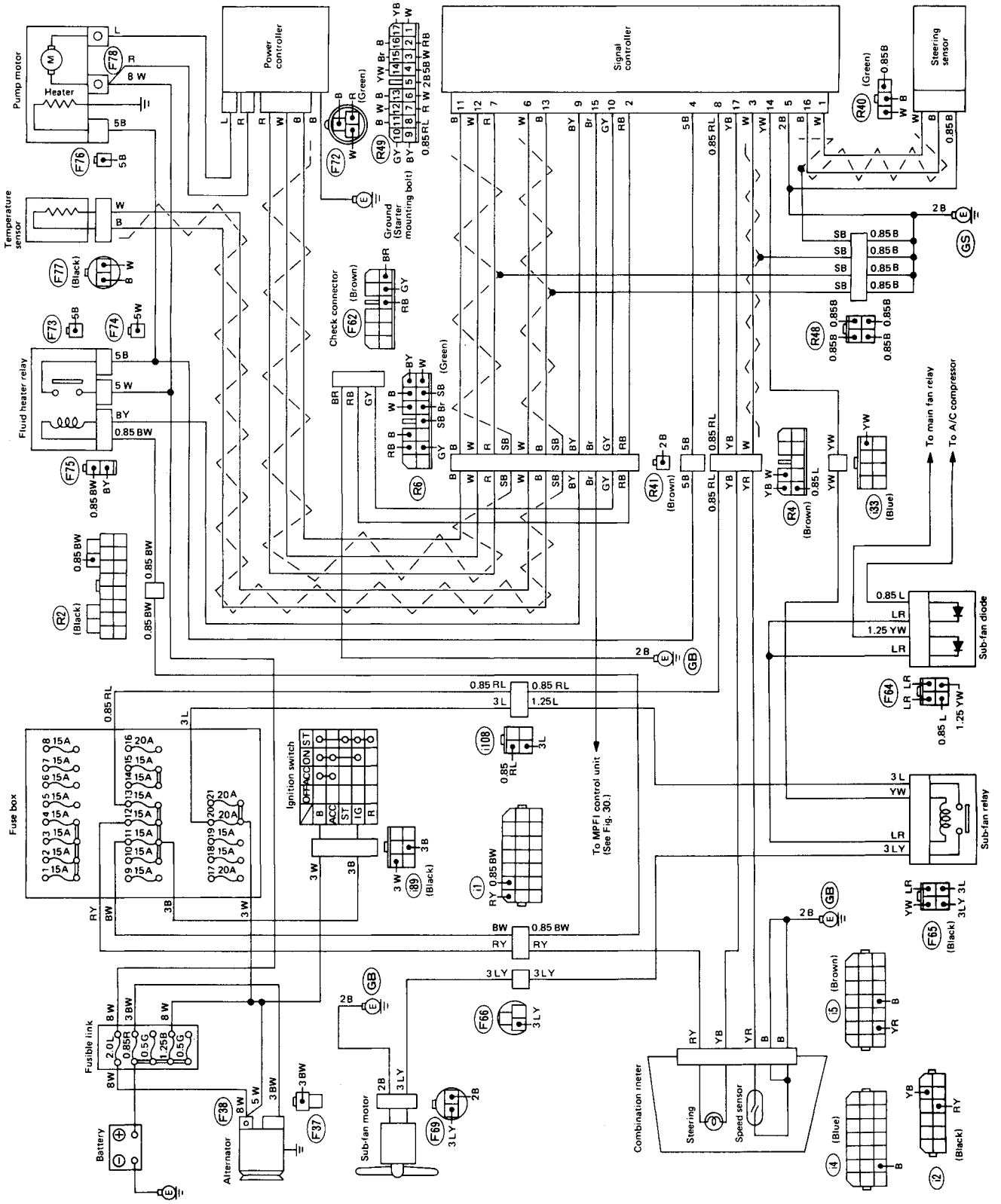

Fig. 47

L6-1735

B-1 SELF-DIAGNOSTIC PROCEDURE

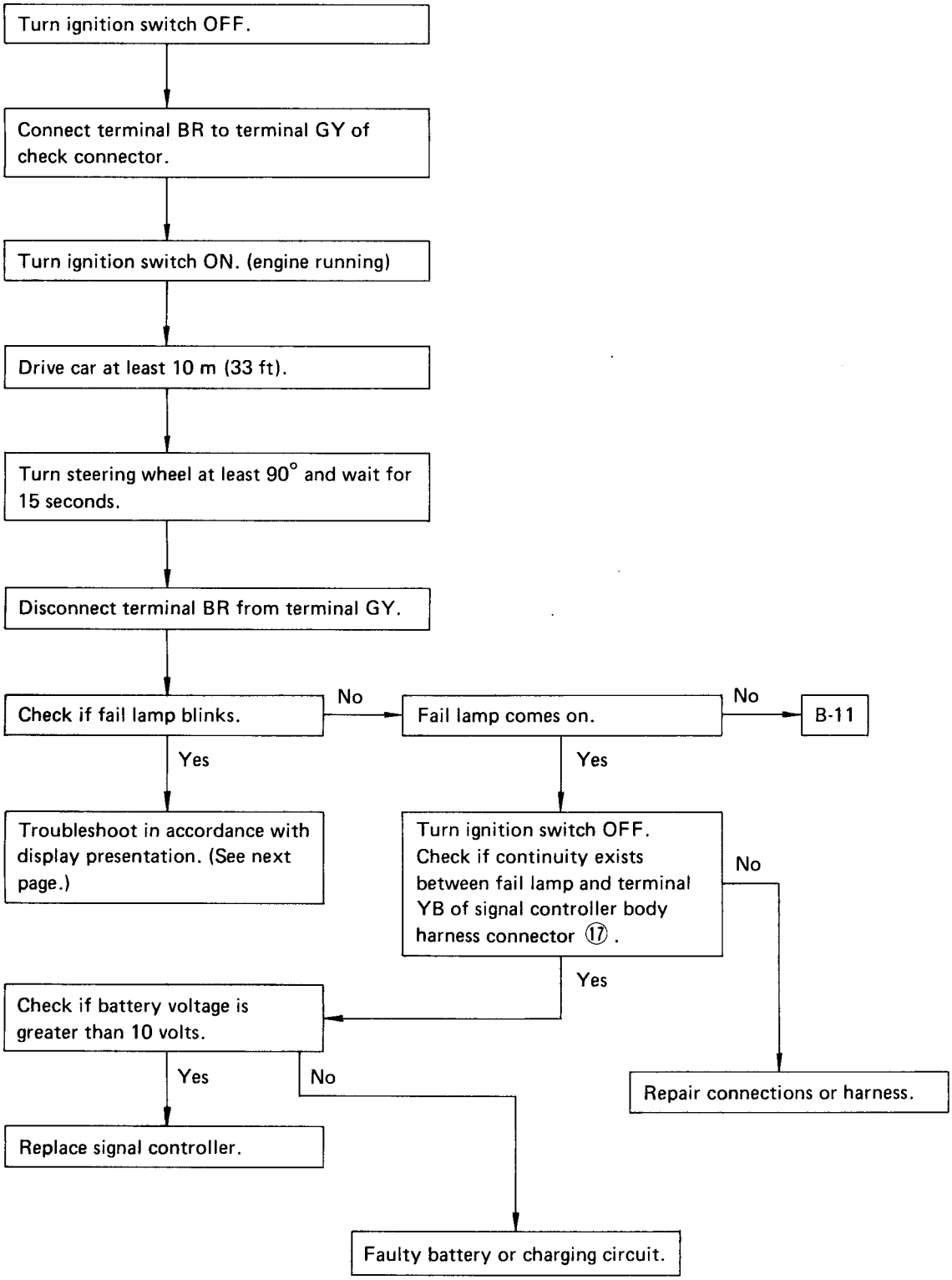

B-2 DISPLAY PRESENTATION

Display presentation	Cause	Refer to
	System operates properly.	–
Lamp remains off.	Signal is not emitted from MPFI control unit.	B-11
	Faulty car-speed sensor circuit.	B-3
	Faulty steering sensor circuit.	B-4
	Faulty temperature sensor circuit.	B-5
	Faulty power steering fluid heater circuit.	B-6
	Faulty pump motor drive circuit.	B-7
	Faulty pump motor drive circuit.	B-8
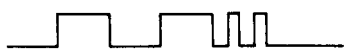	Faulty signal control power line voltage.	B-10
	Faulty power controller control	B-9

Example:

- All systems operate properly.

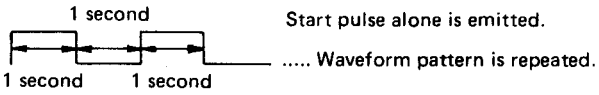

- Faulty car-speed pulse circuit.

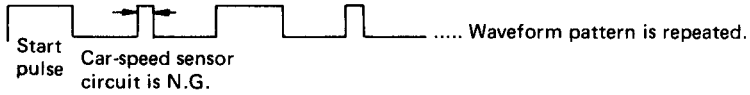

- Both car-speed pulse circuit and pump motor circuits are faulty.

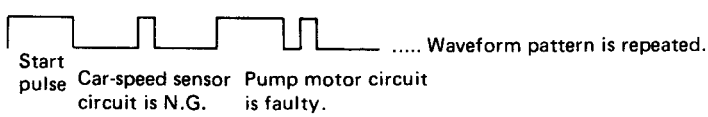

B-3 FAULTY CAR-SPEED SENSOR CIRCUIT

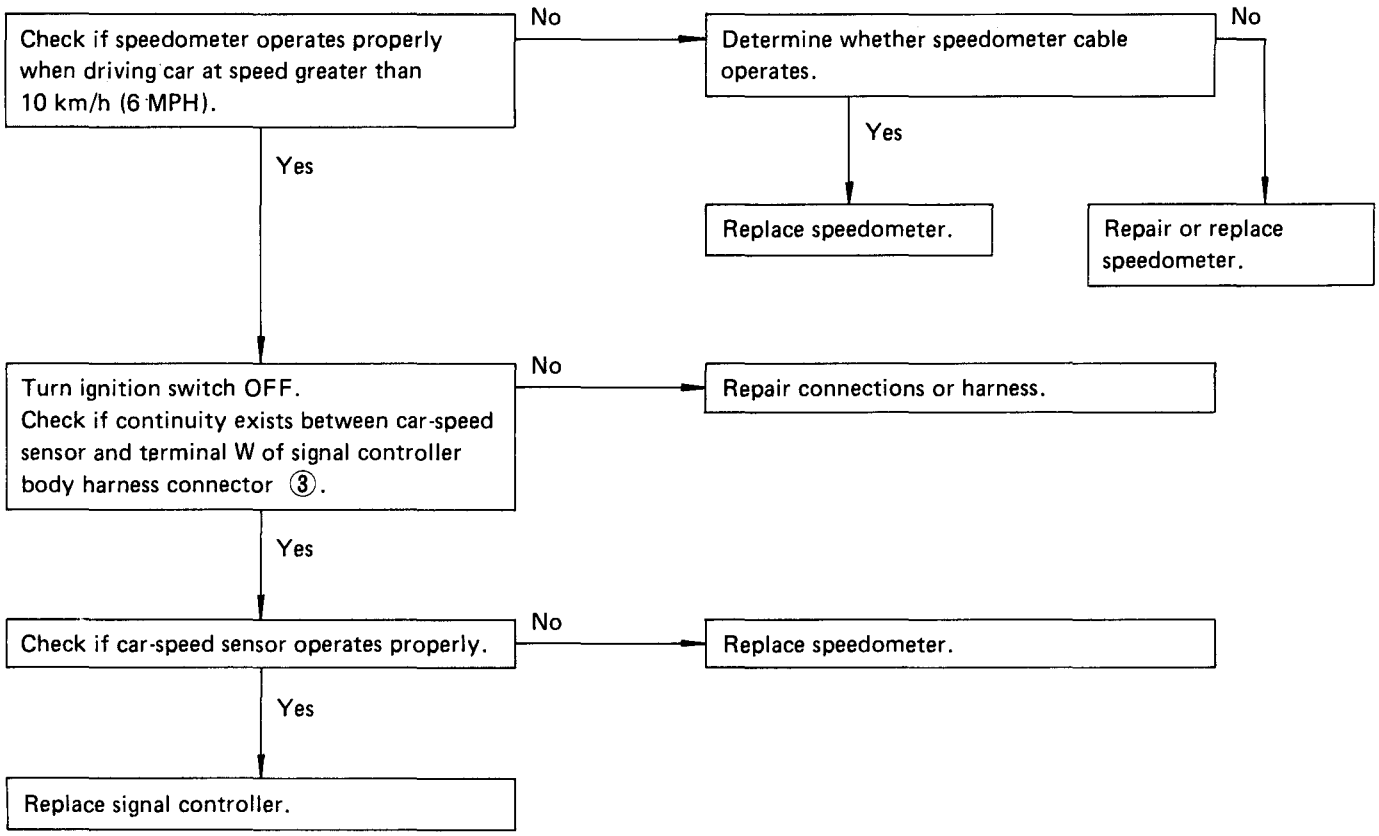

B-4 FAULTY STEERING SENSOR CIRCUIT

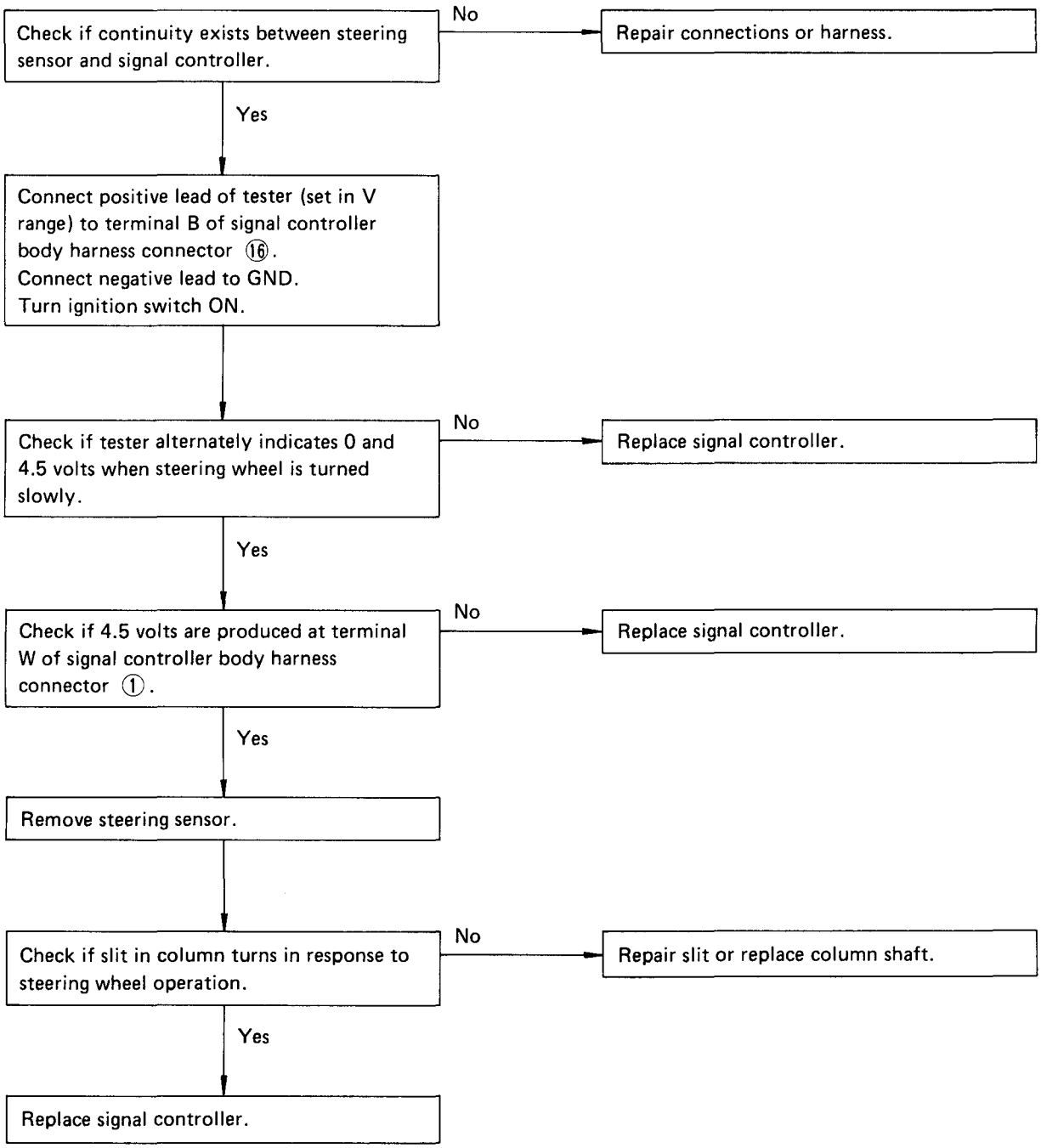

B-5 FAULTY TEMPERATURE SENSOR CIRCUIT

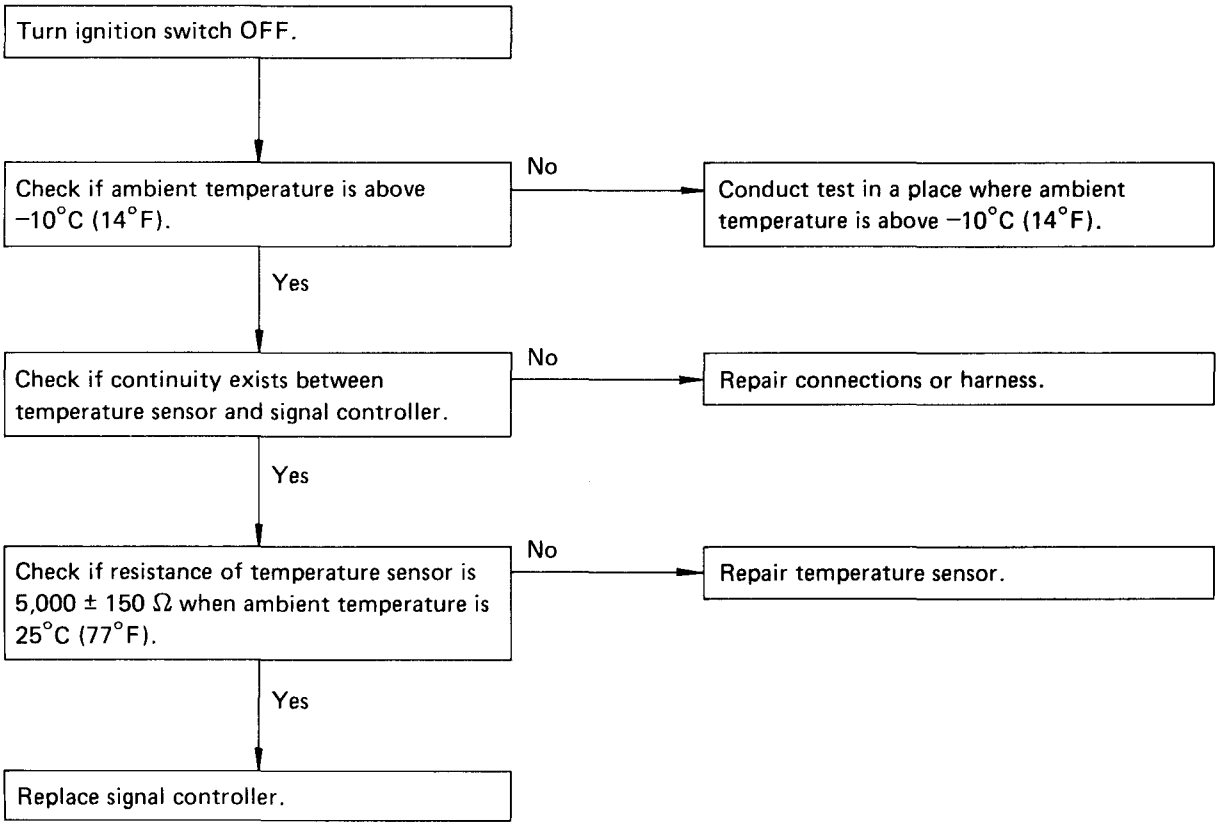

B-6 FAULTY POWER STEERING FLUID HEATER CIRCUIT

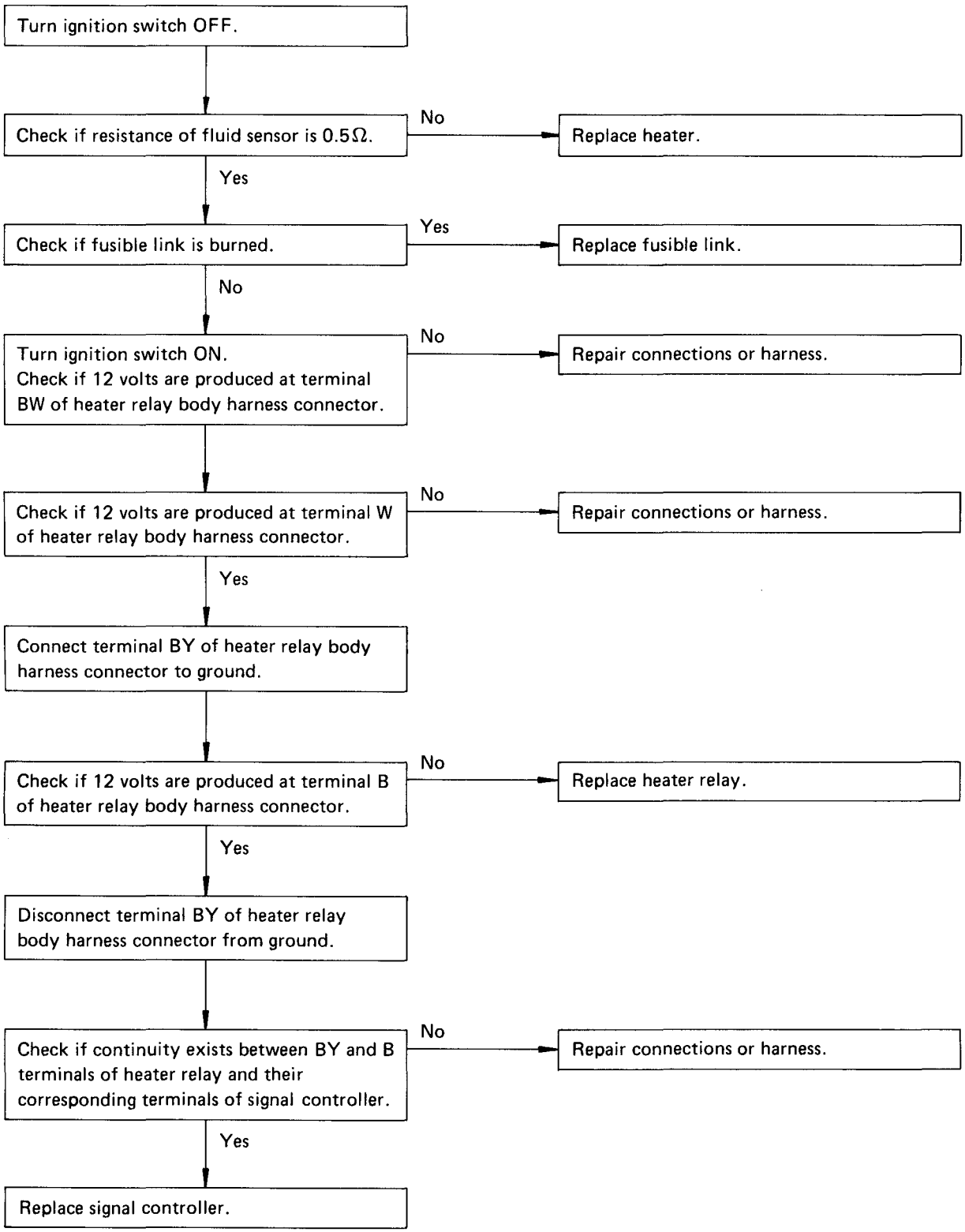

B-7 FAULTY PUMP MOTOR DRIVE CIRCUIT

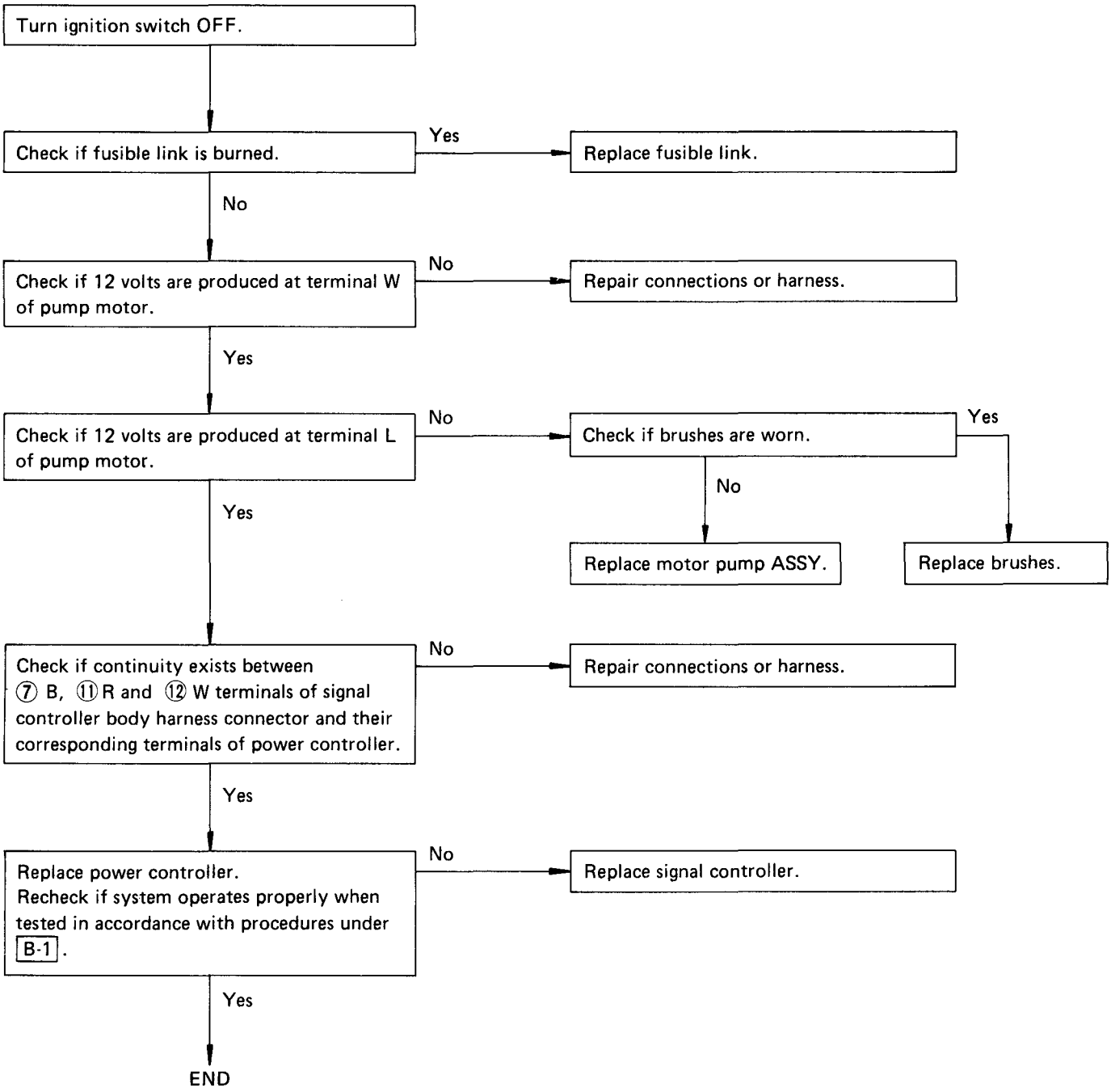

B-8 FAULTY PUMP MOTOR DRIVE CIRCUIT

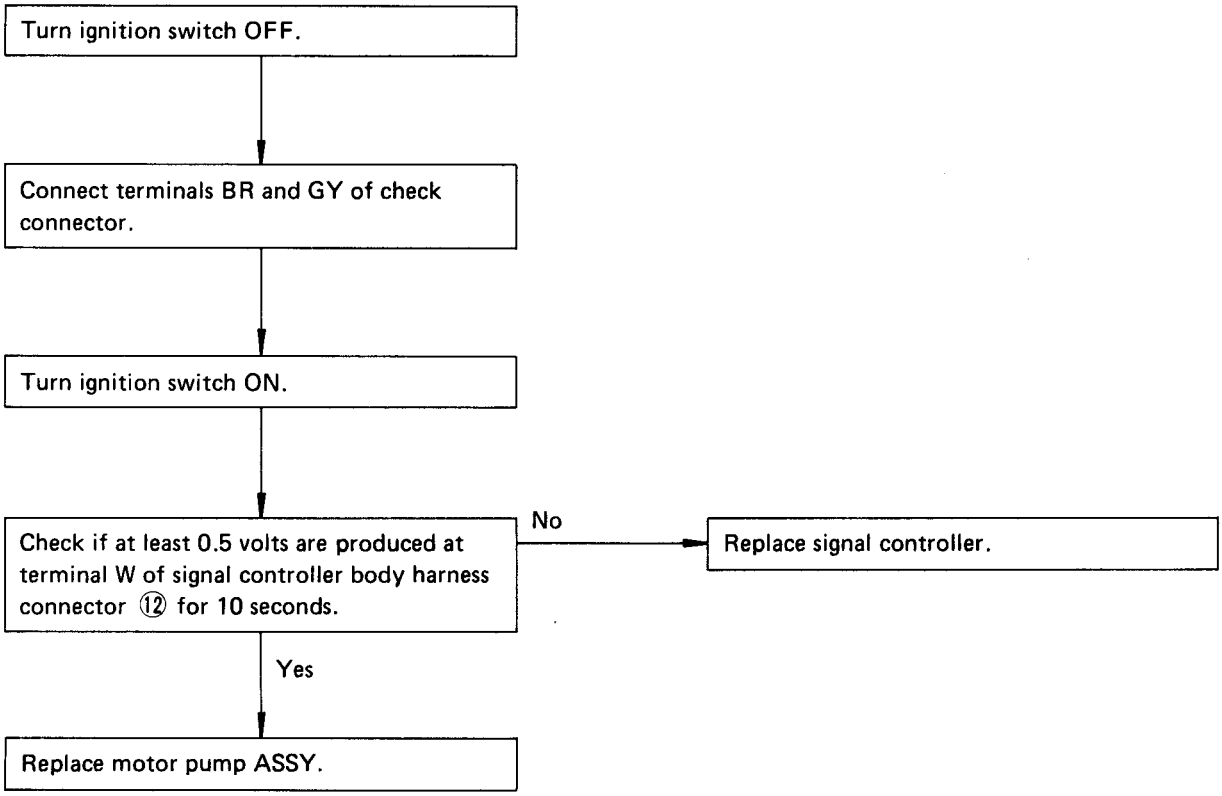

B-9 FAULTY POWER CONTROLLER CONTROL

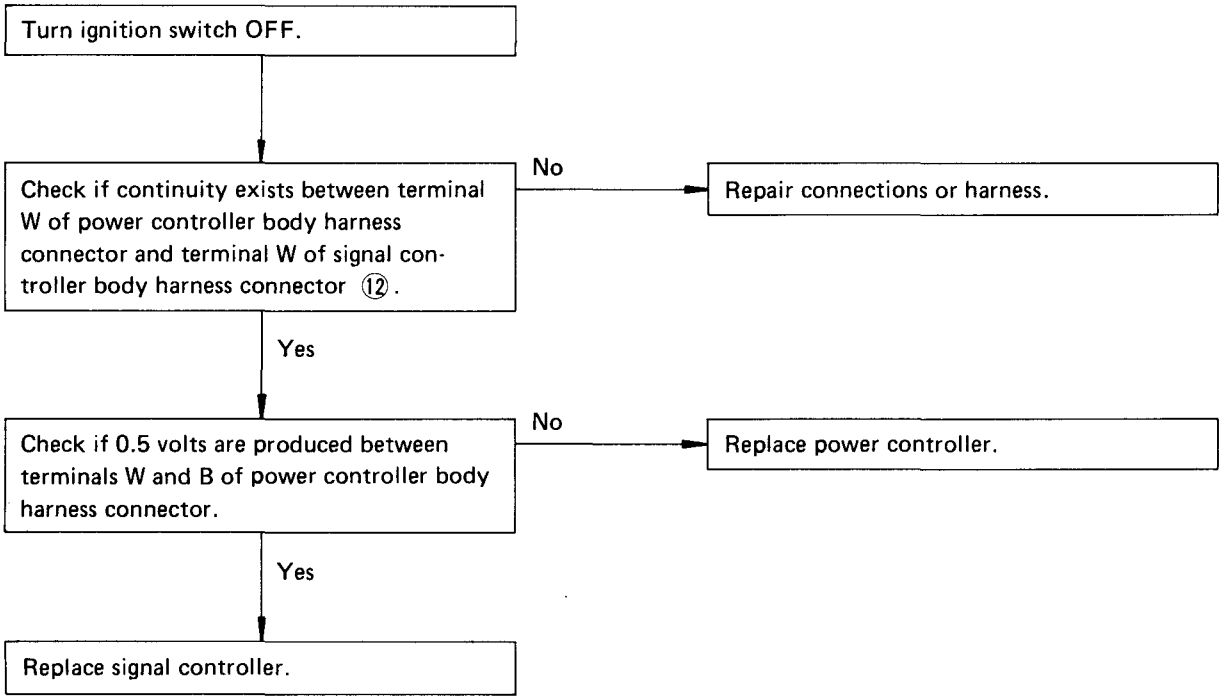

B-10 FAULTY SIGNAL CONTROLLER LINE VOLTAGE

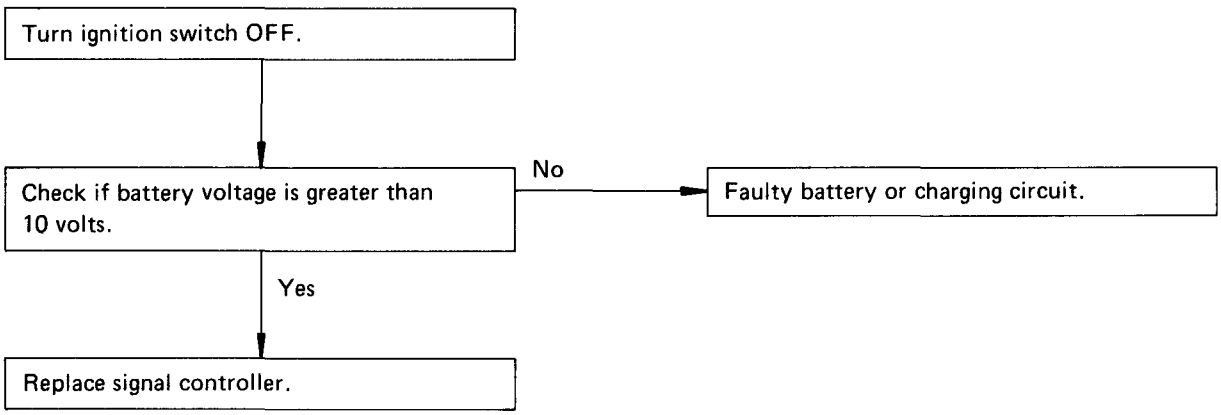

B-11 FAIL LAMP DOES NOT COME ON

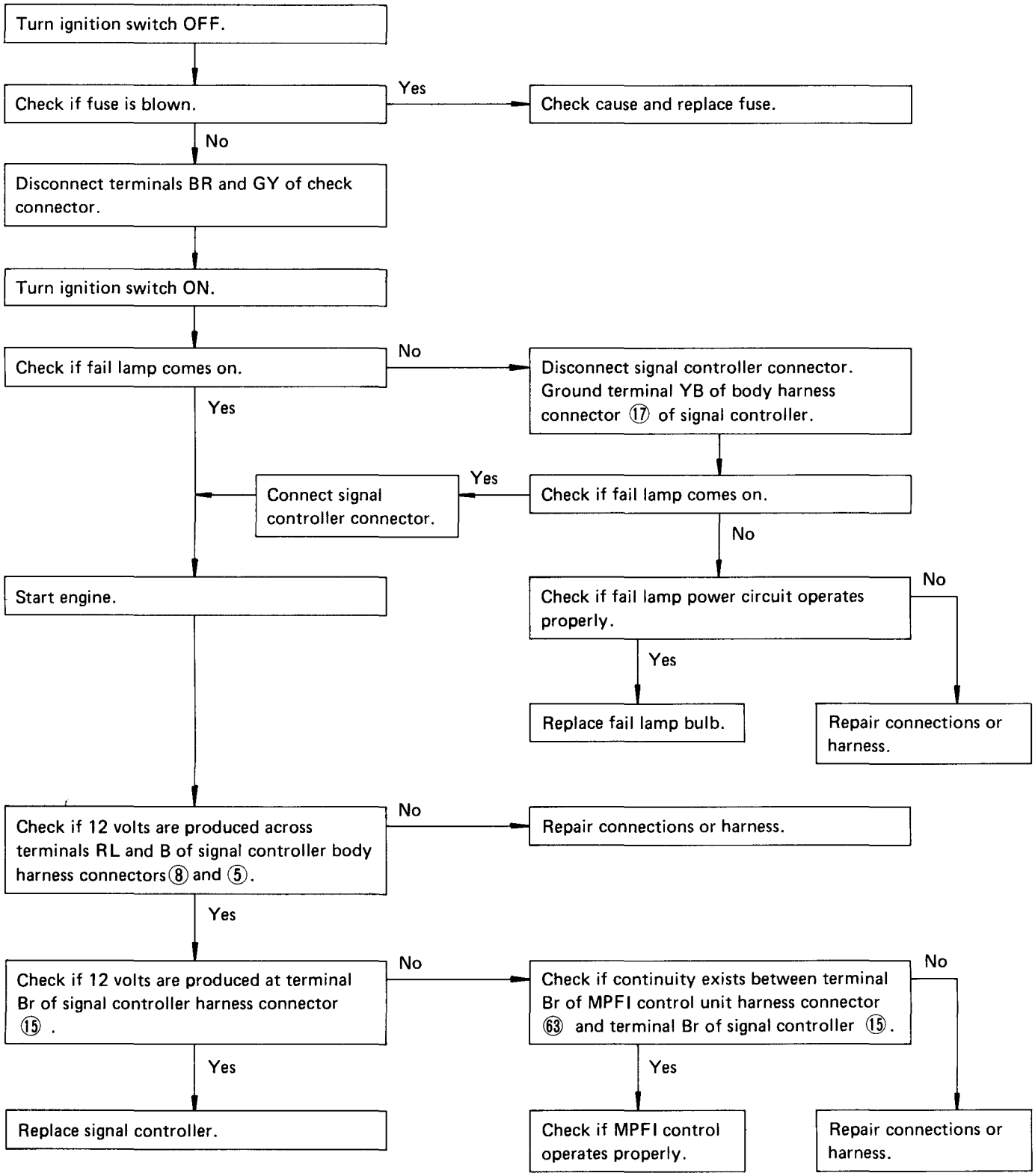

B-12 FAULTY SUB-FAN CONTROL CIRCUIT – Part I

(The radiator sub-fan will not stop when the steering wheel is turned at least 250 deg/sec. while the engne is off, the air conditioner is ON and/or engine coolant temperature is so high the main fan operates.)

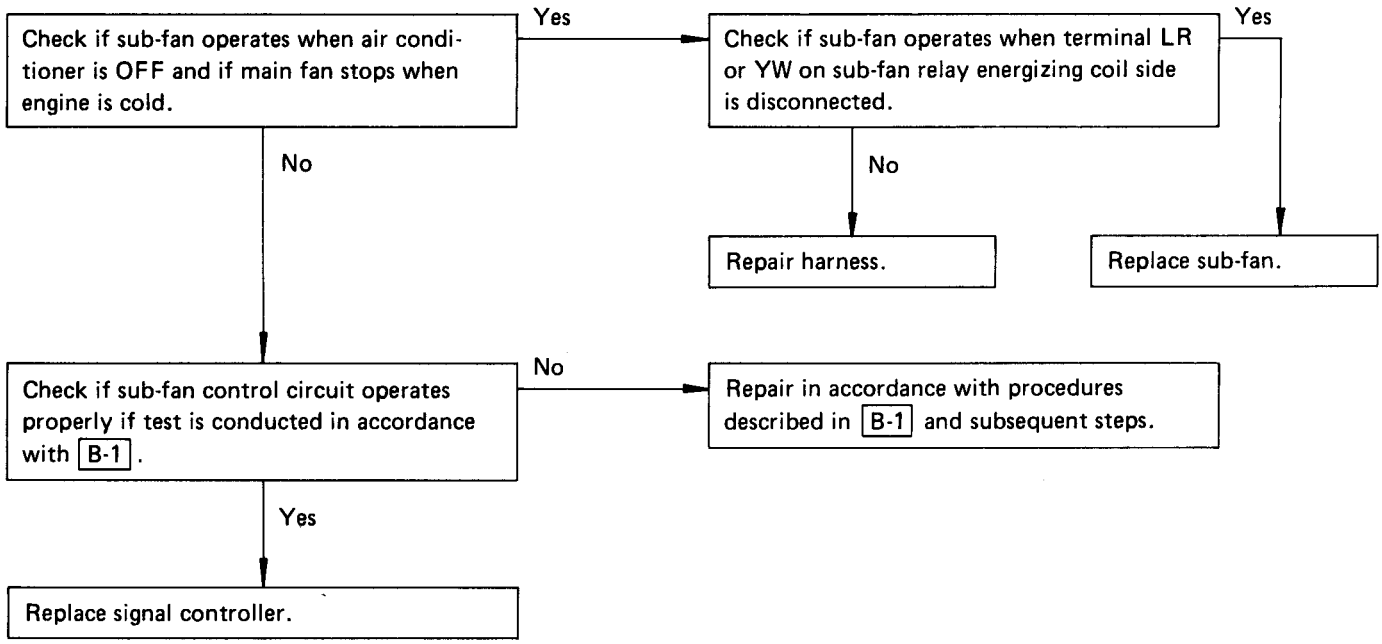

B-13 FAULTY SUB-FAN CONTROL CIRCUIT – Part II

(The sub-fan will not operate when the main fan operates or when the air conditioner is ON.)

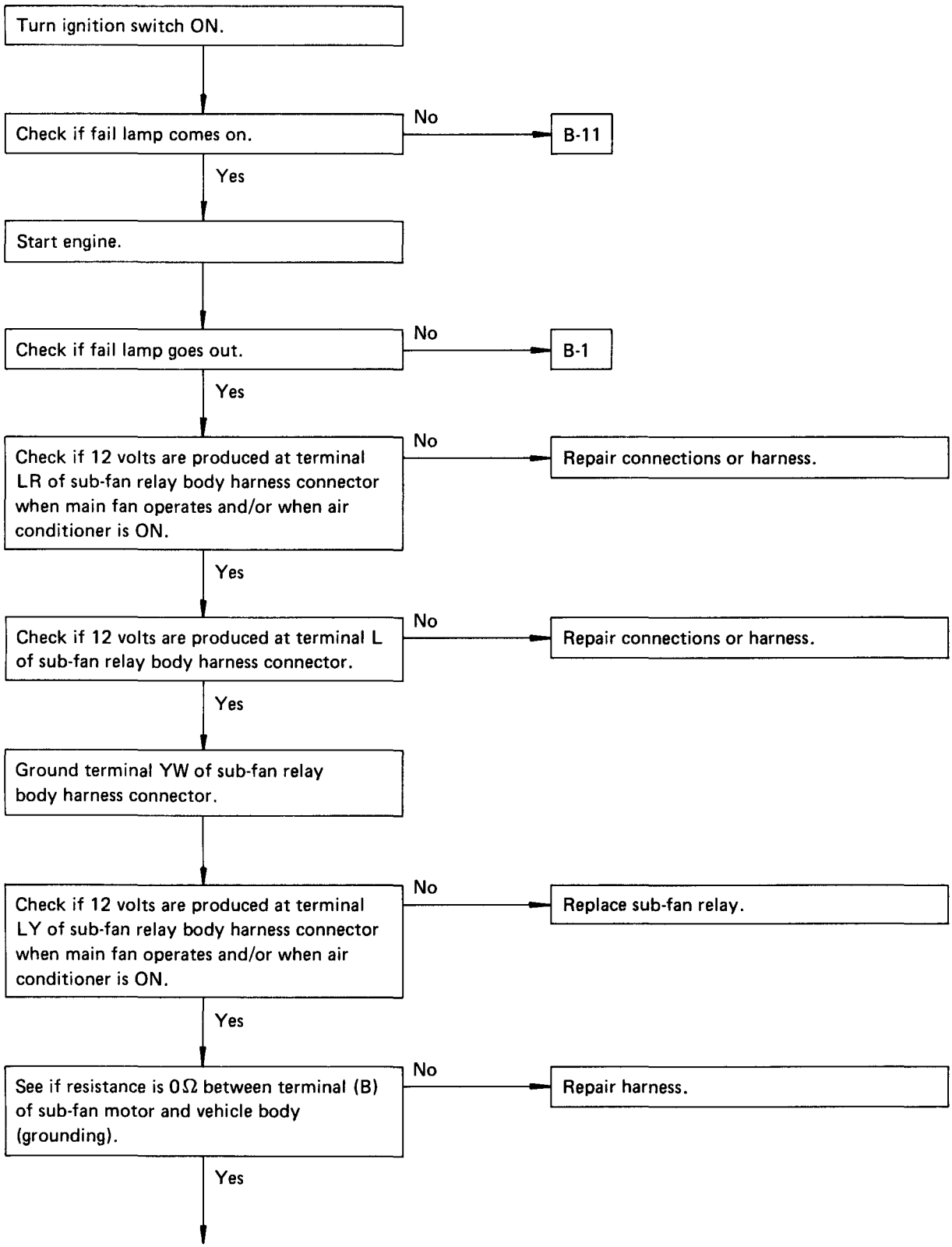

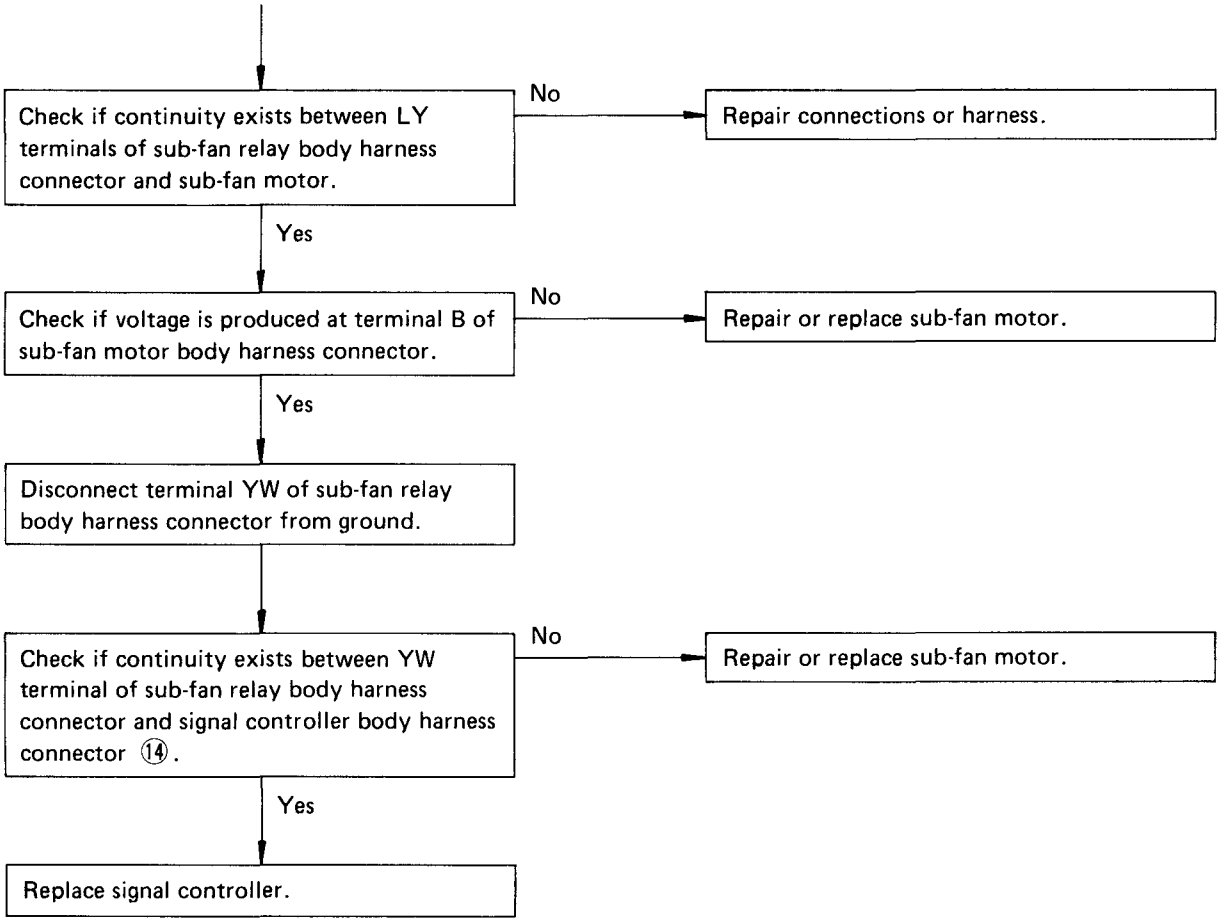
Check if continuity exists between LY terminals of sub-fan relay body harness connector and sub-fan motor.
No
Repair connections or harness.
Yes
Check if voltage is produced at terminal B of sub-fan motor body harness connector.
No
Repair or replace sub-fan motor.
Yes
Disconnect terminal YW of sub-fan relay body harness connector from ground.
Check if continuity exists between YW terminal of sub-fan relay body harness connector and signal controller body harness connector ⑭.
No
Repair or replace sub-fan motor.
Yes
Replace signal controller.

Parking Brake System

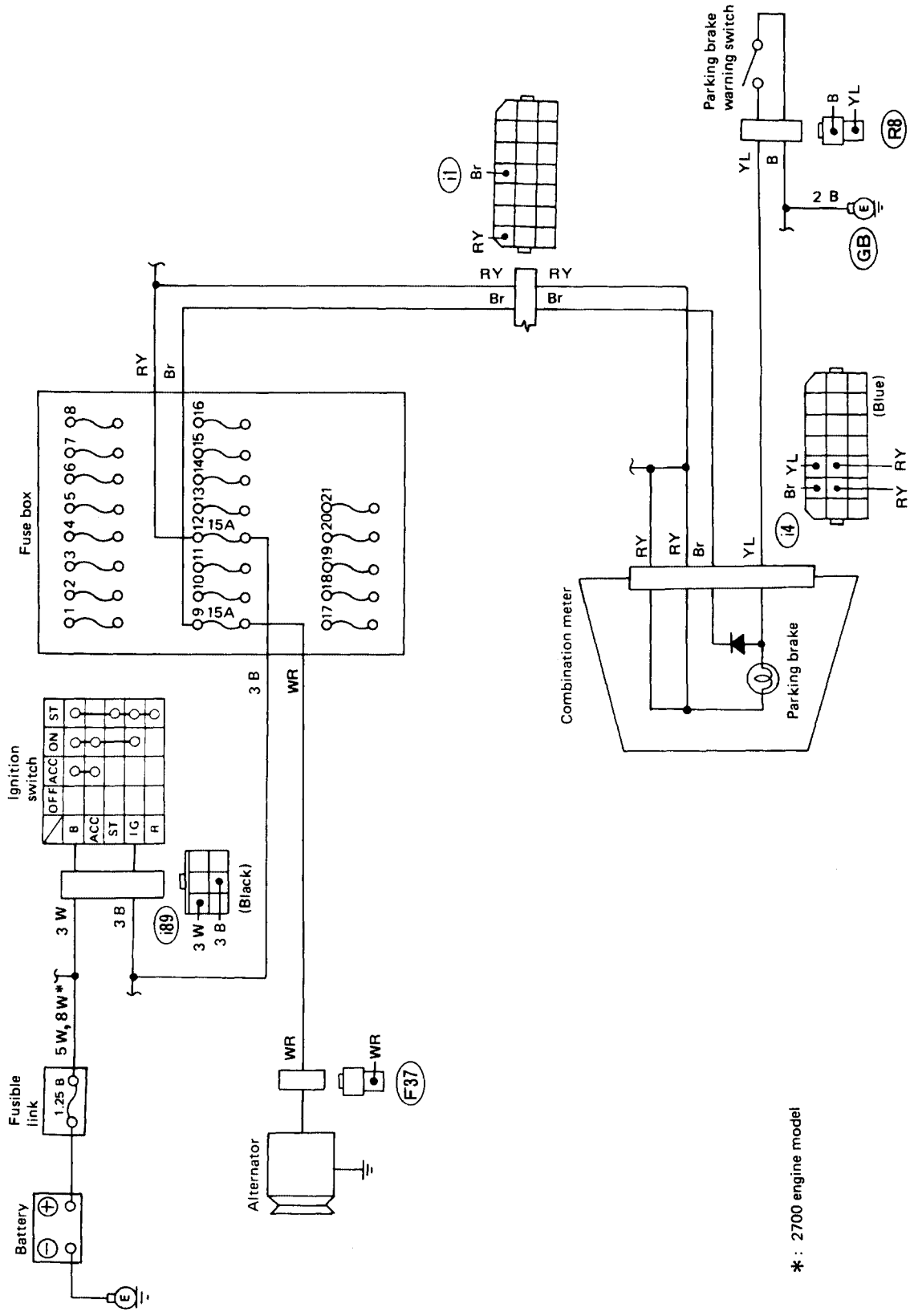

Fig. 48

L6-1736

Brake Fluid Level Warning System

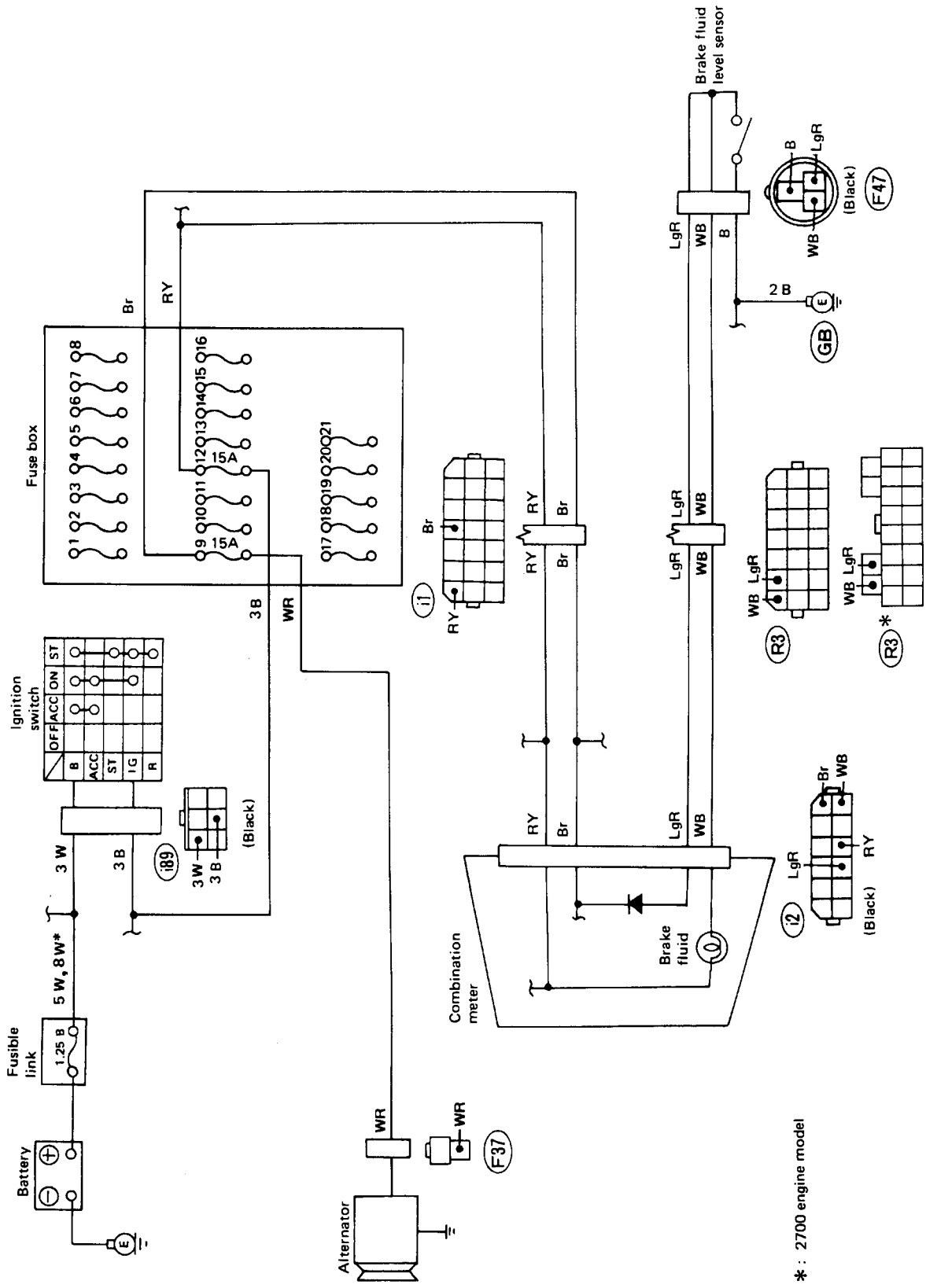

Fig. 49 L6-1737

4WD-MT System

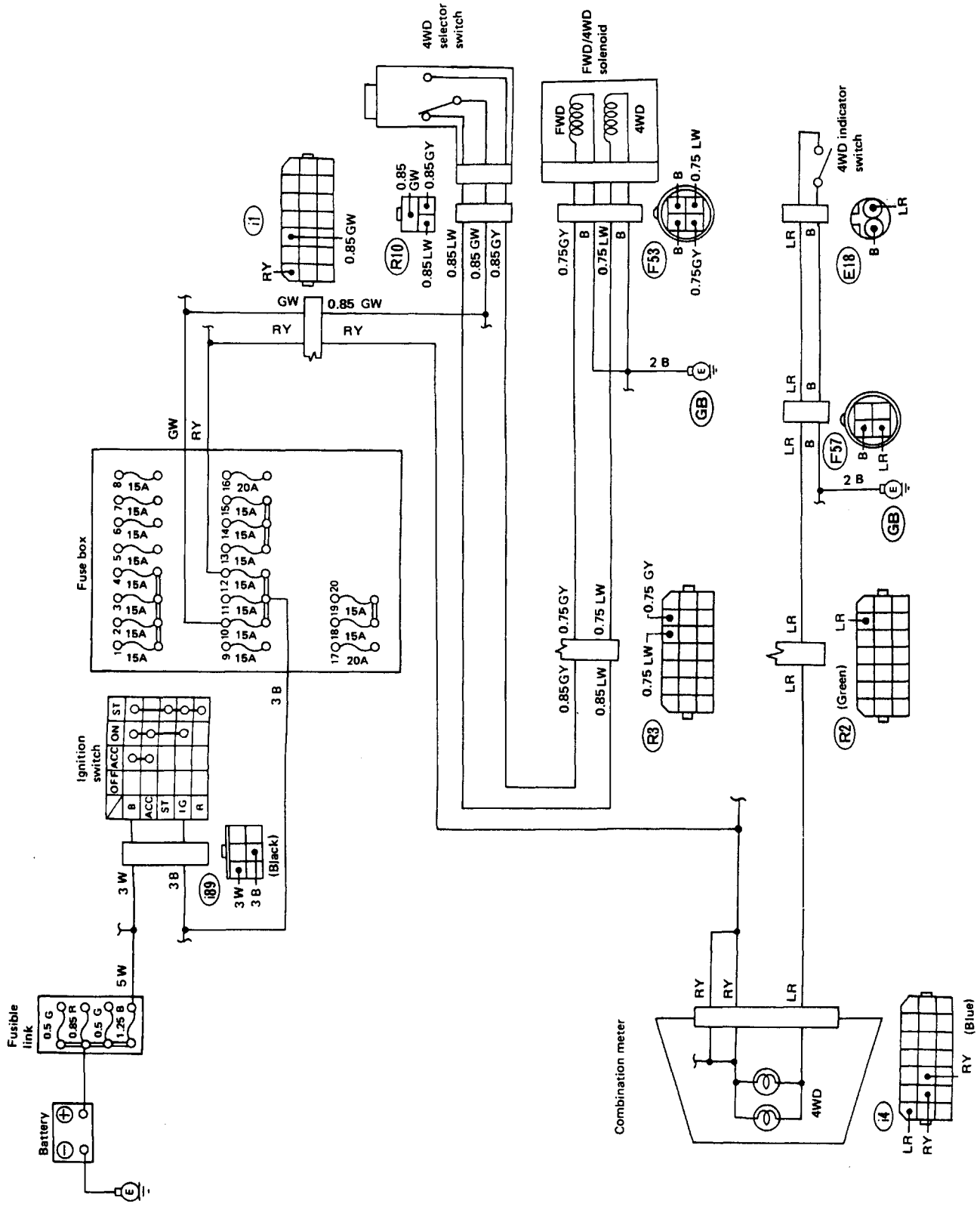

Fig. 50 Selective 4WD

L6-1738

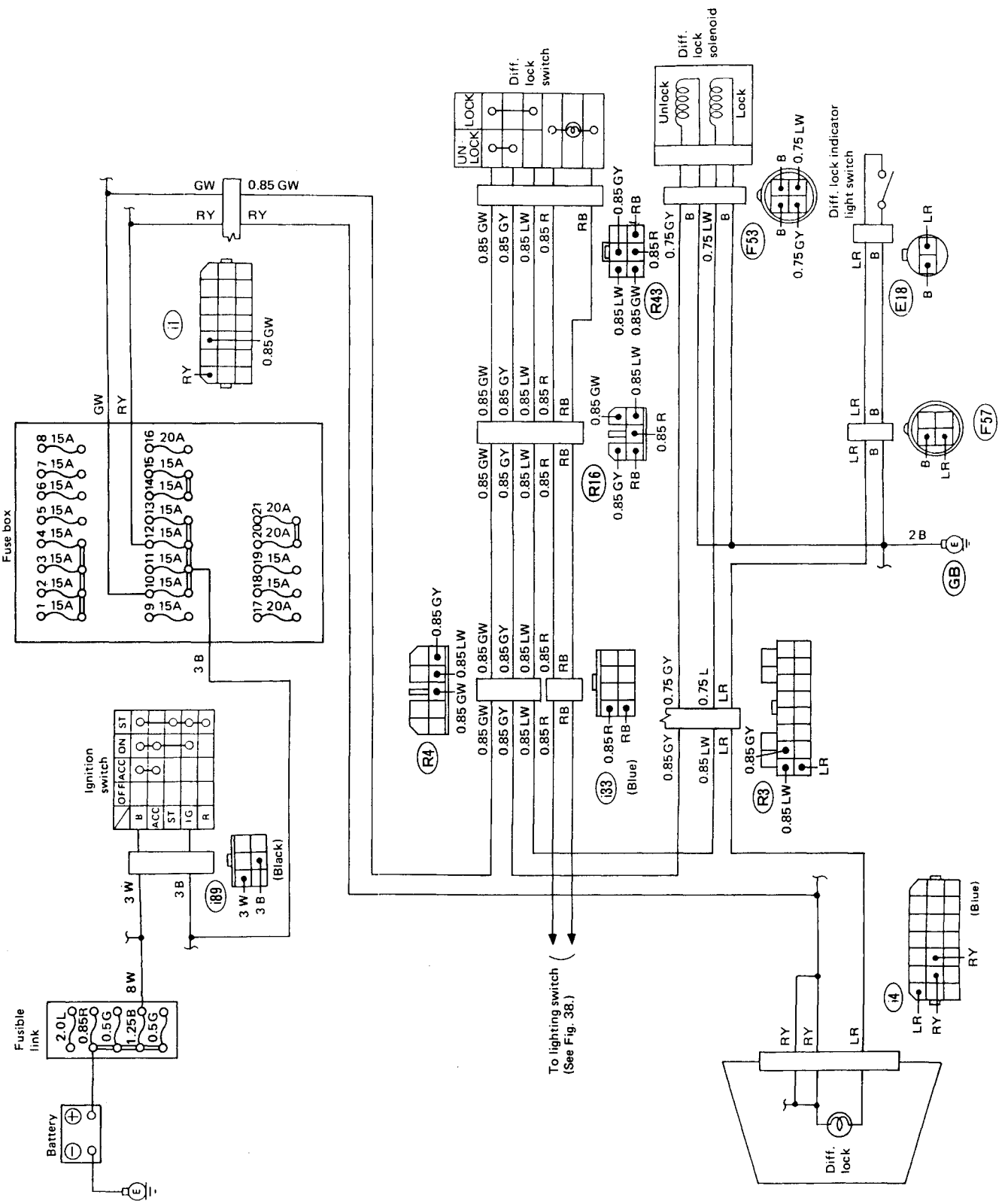

Fig. 51 Full-time 4WD

L6-1739

Automatic Transmission Control System

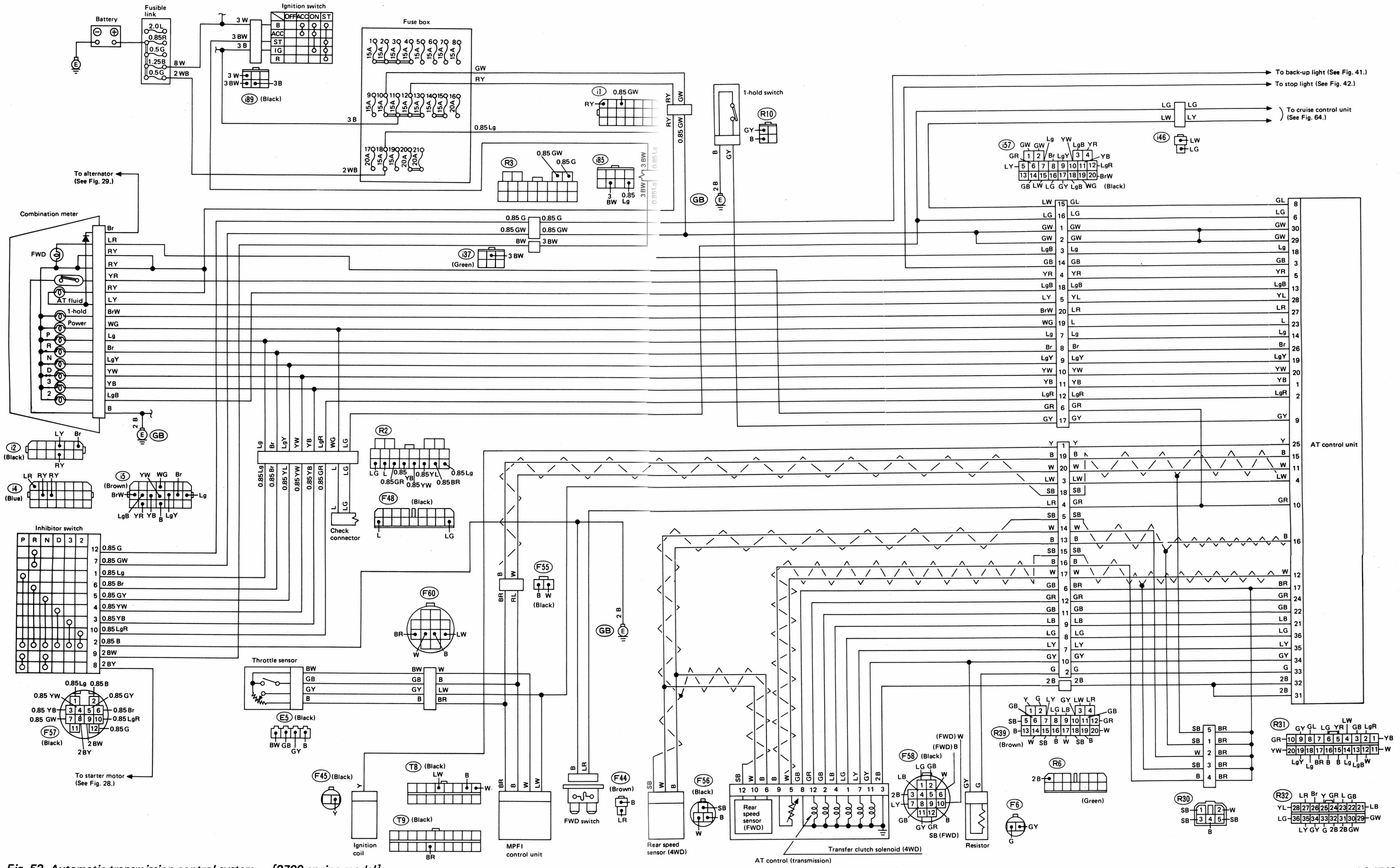

Fig. 52 Automatic transmission control system — [2700 engine model]

L6-1740

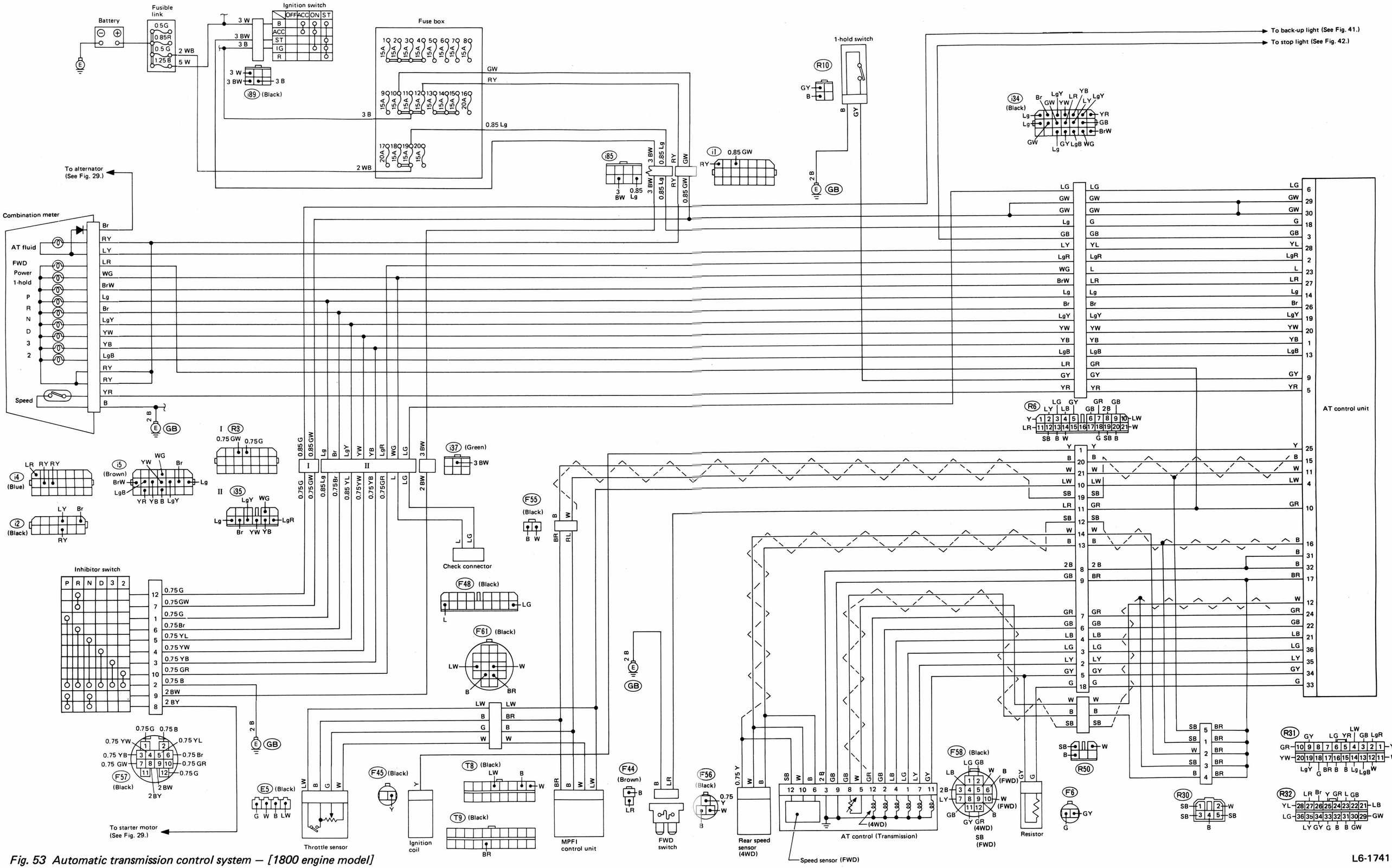

Fig. 53 Automatic transmission control system — [1800 engine model]

L6-1741

Windshield Wiper & Washer

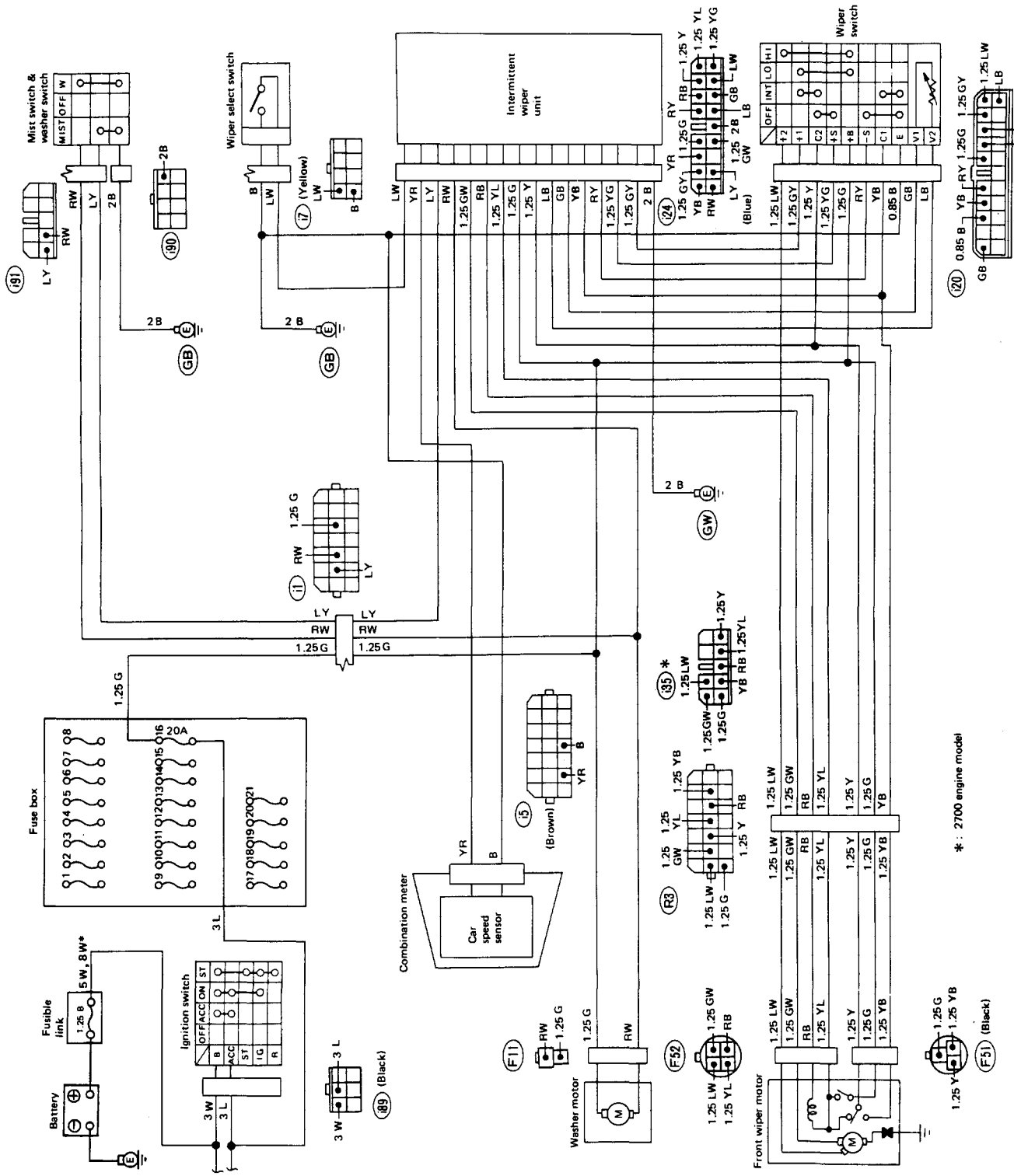

Fig. 54

L6-1742

Headlight Washer

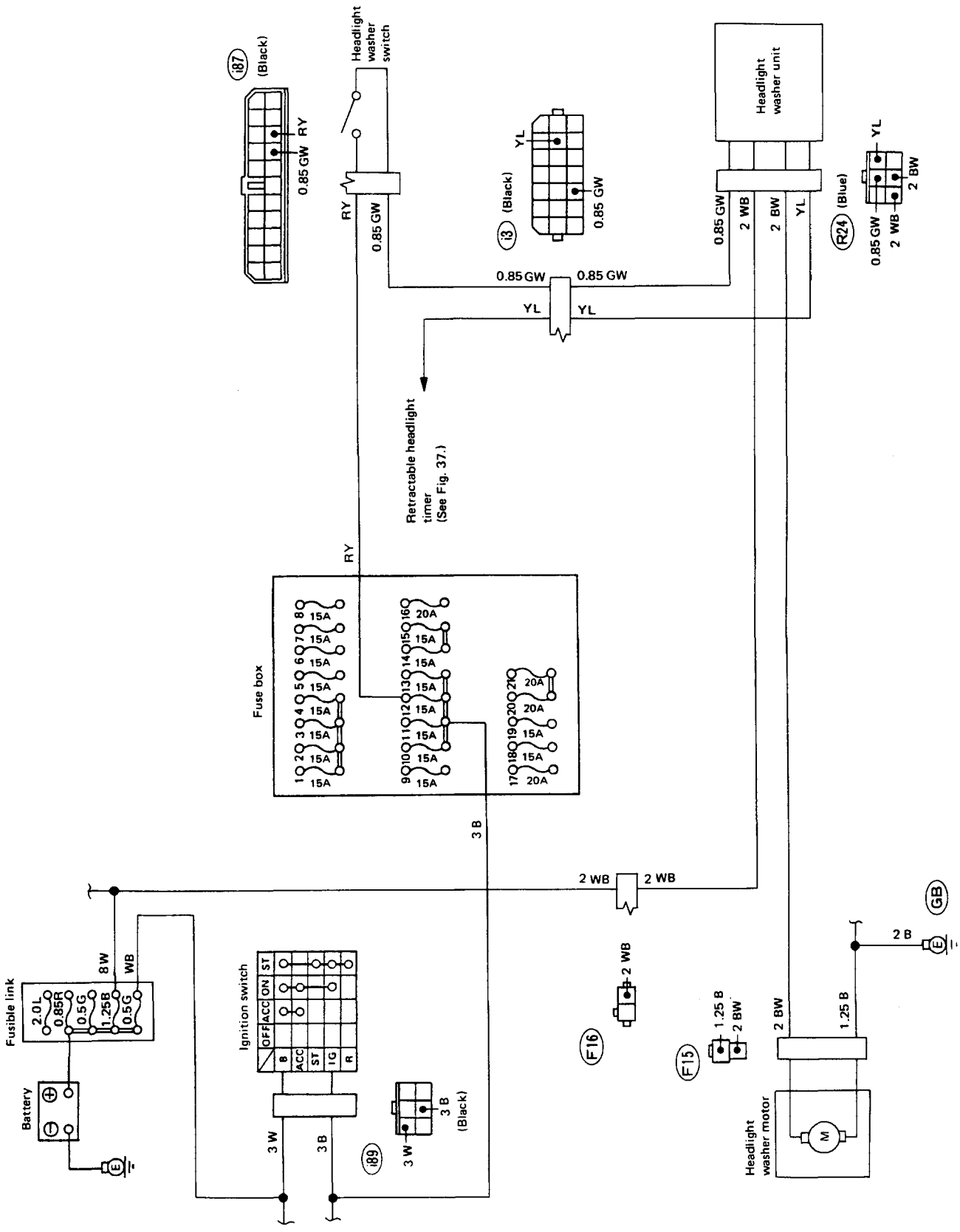

Fig. 55 L6-1743

Radio and Auto Antenna

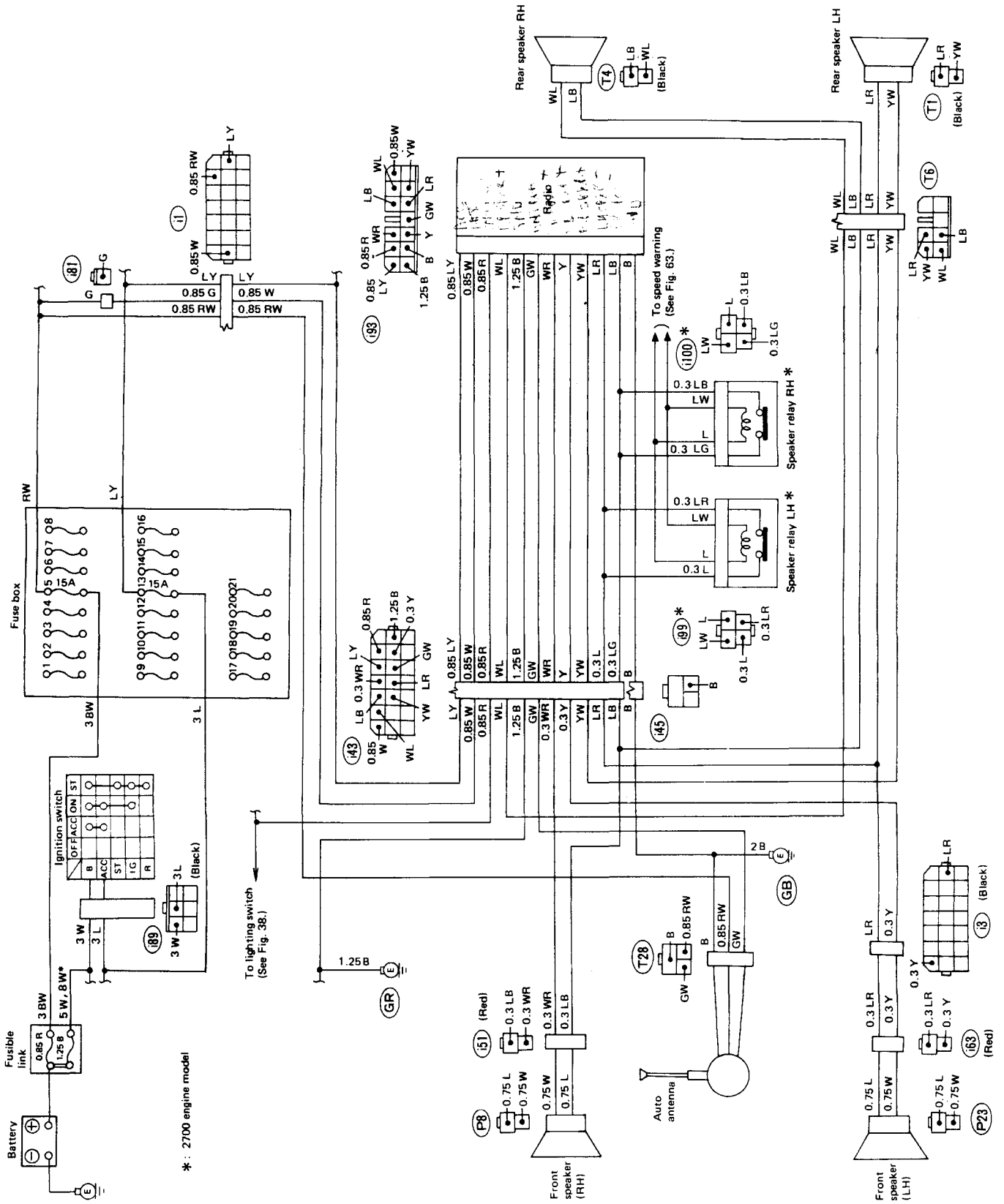

Fig. 56

L6-1744

1) Radio

(1) Low sensitivity

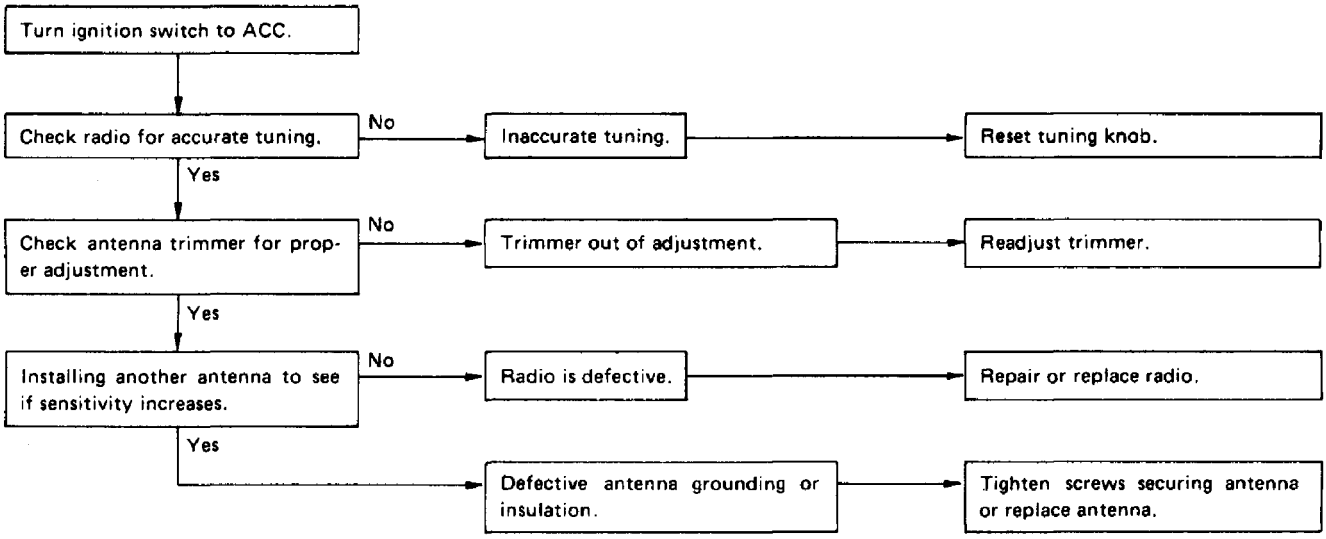

(2) Noisy reception

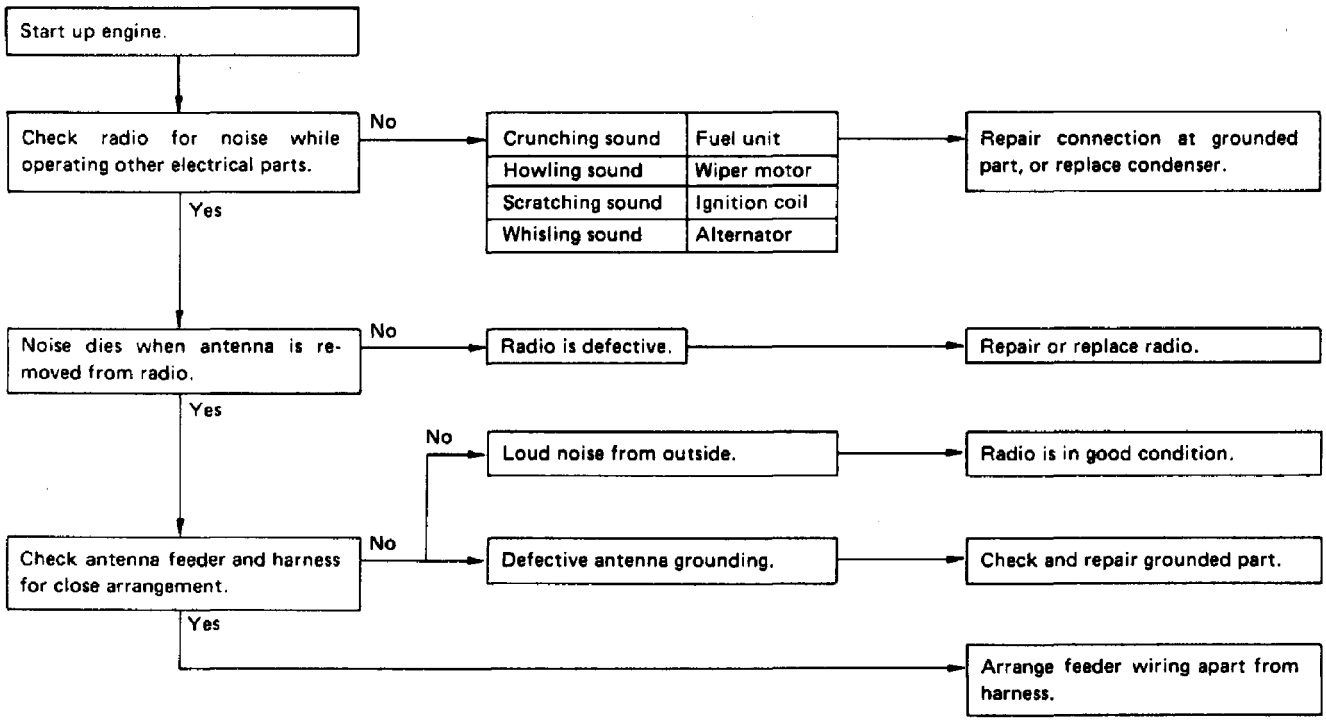

2) Auto antenna

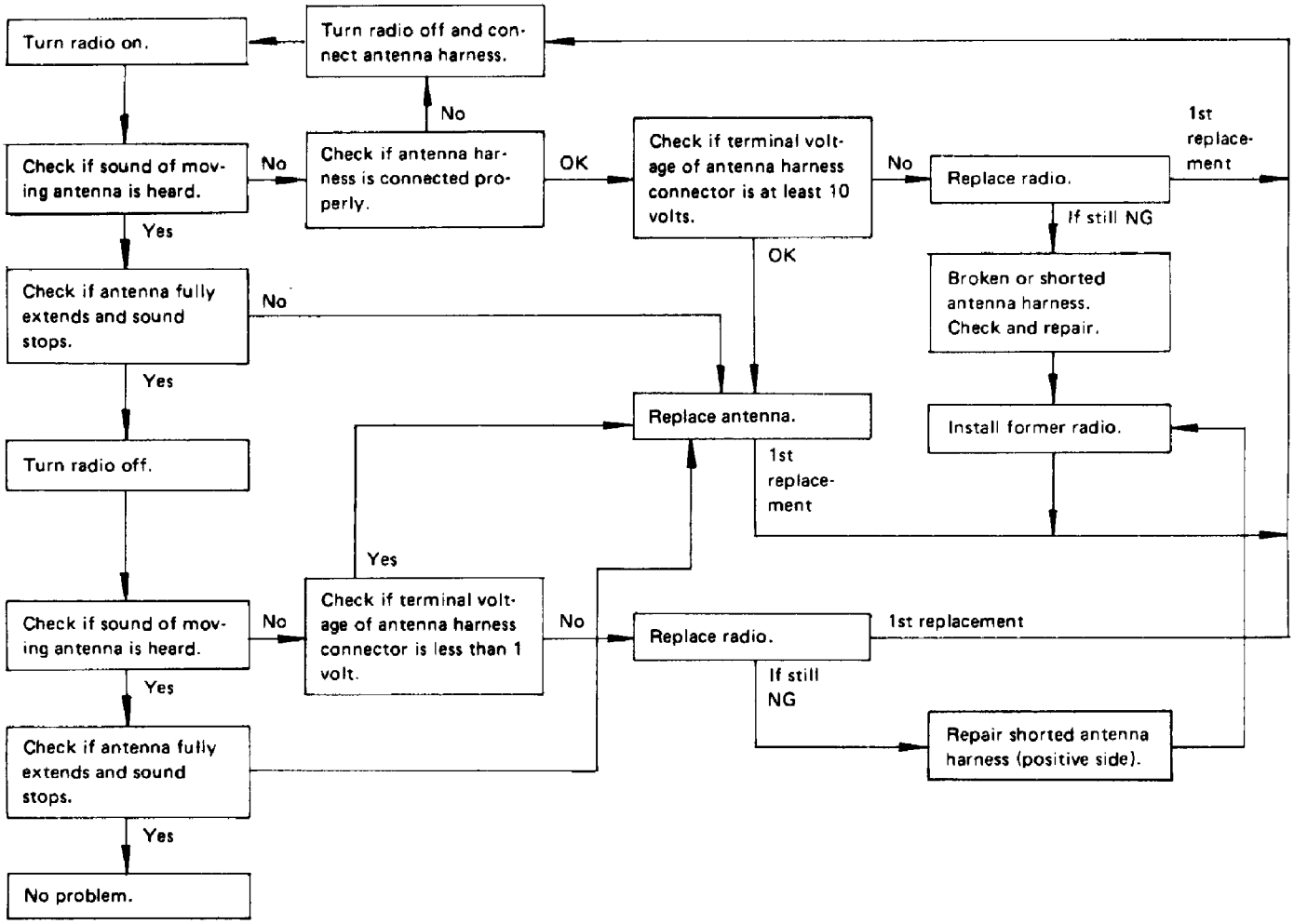

Details of antenna harness connector

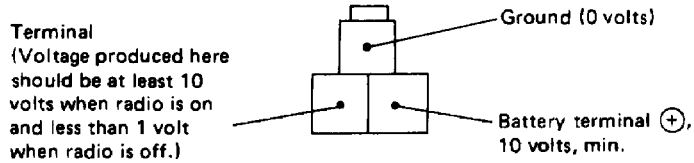

Female connector (body side)

It takes approximately eight seconds for antenna to extend completely.

Horn and Cigarette Lighter

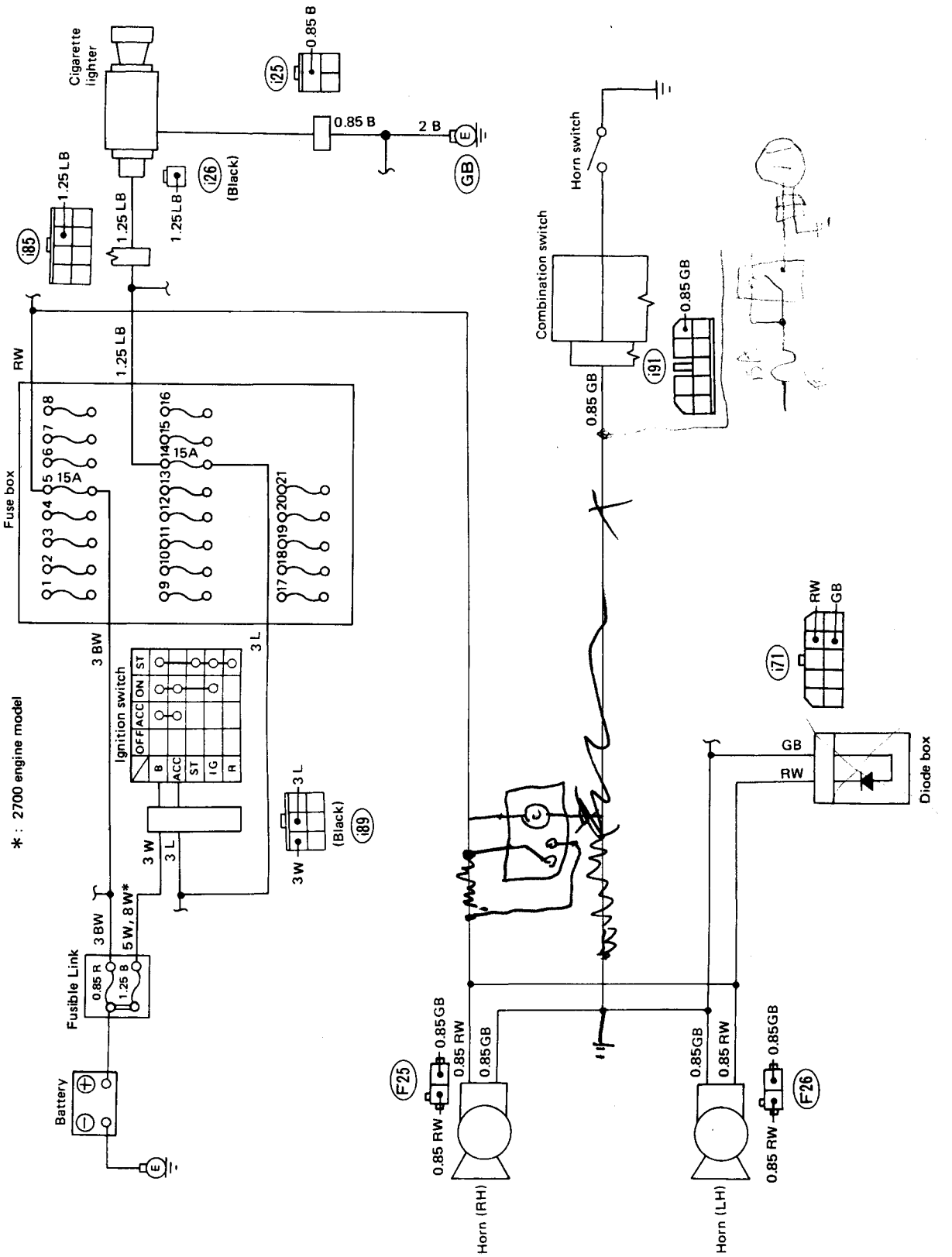

Fig. 57

L6-1745

1) Cigarette Lighter

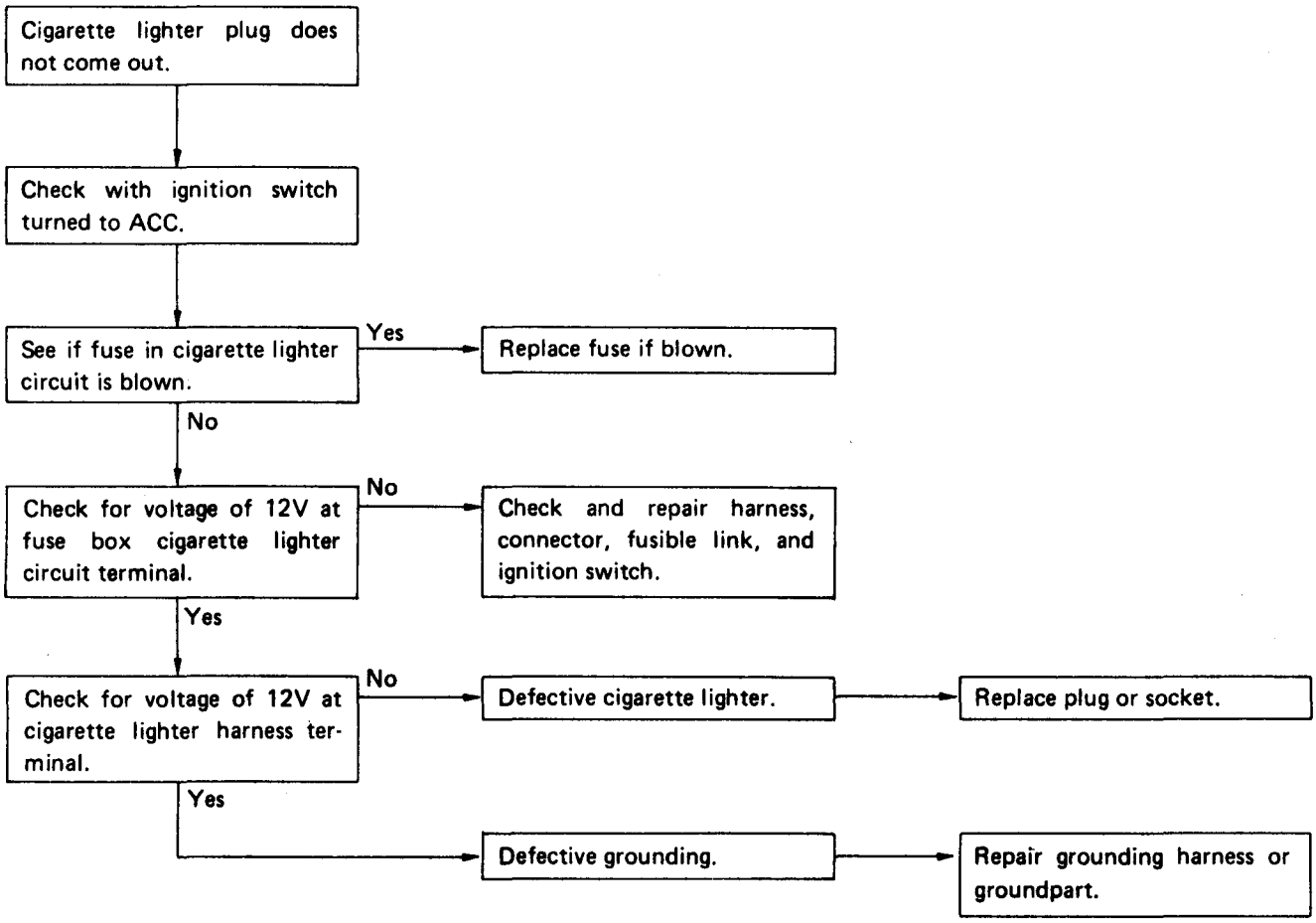

2) Horn

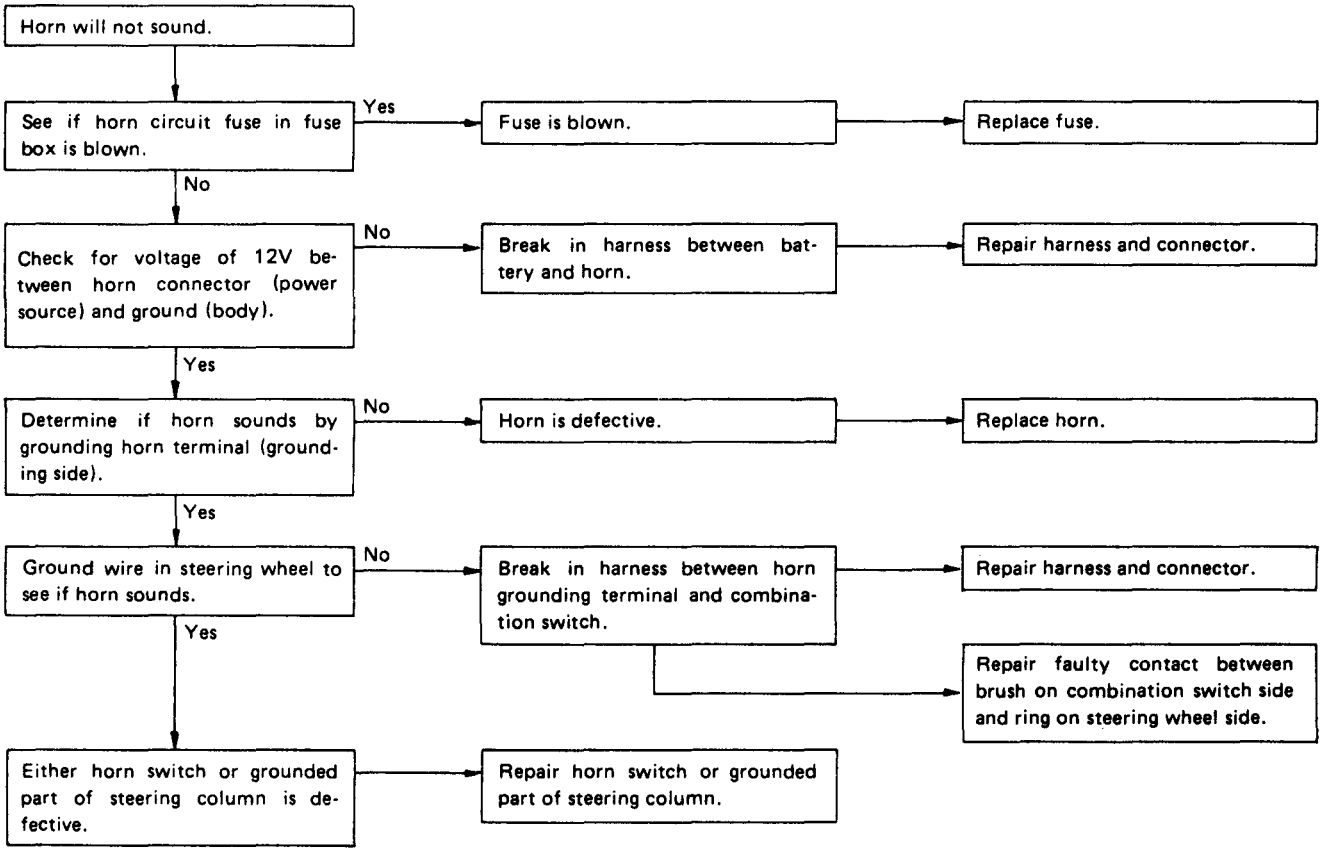

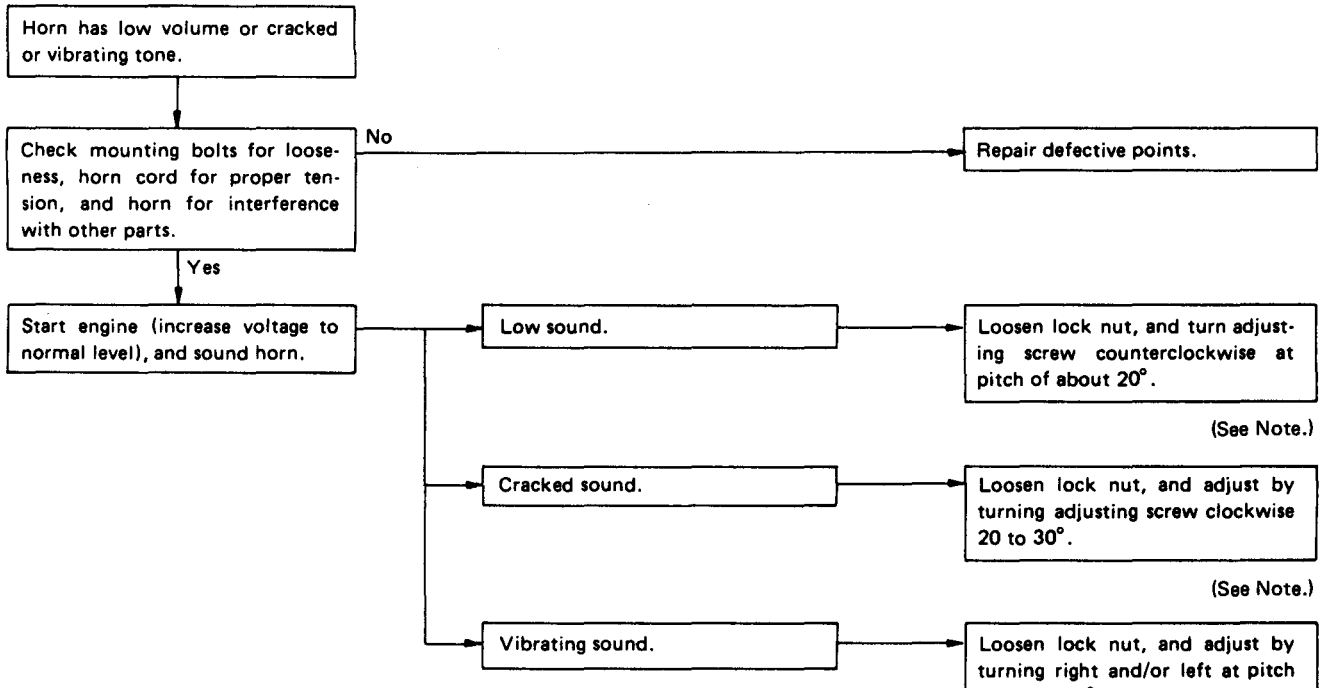

Note: Be sure to tighten lock nut firmly after adjustment.

Clock

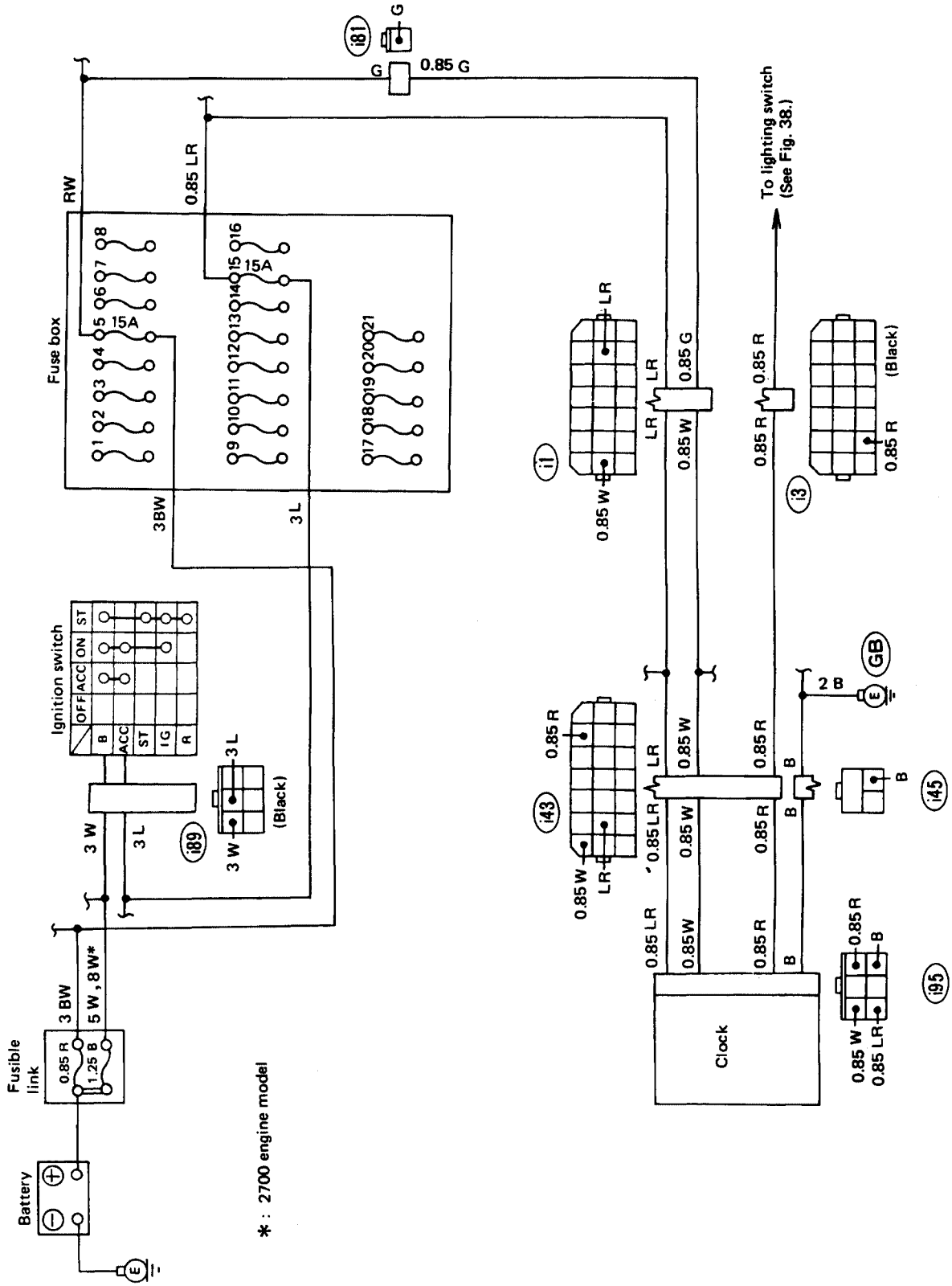

Fig. 58

L6-1746

Rear Window Defogger

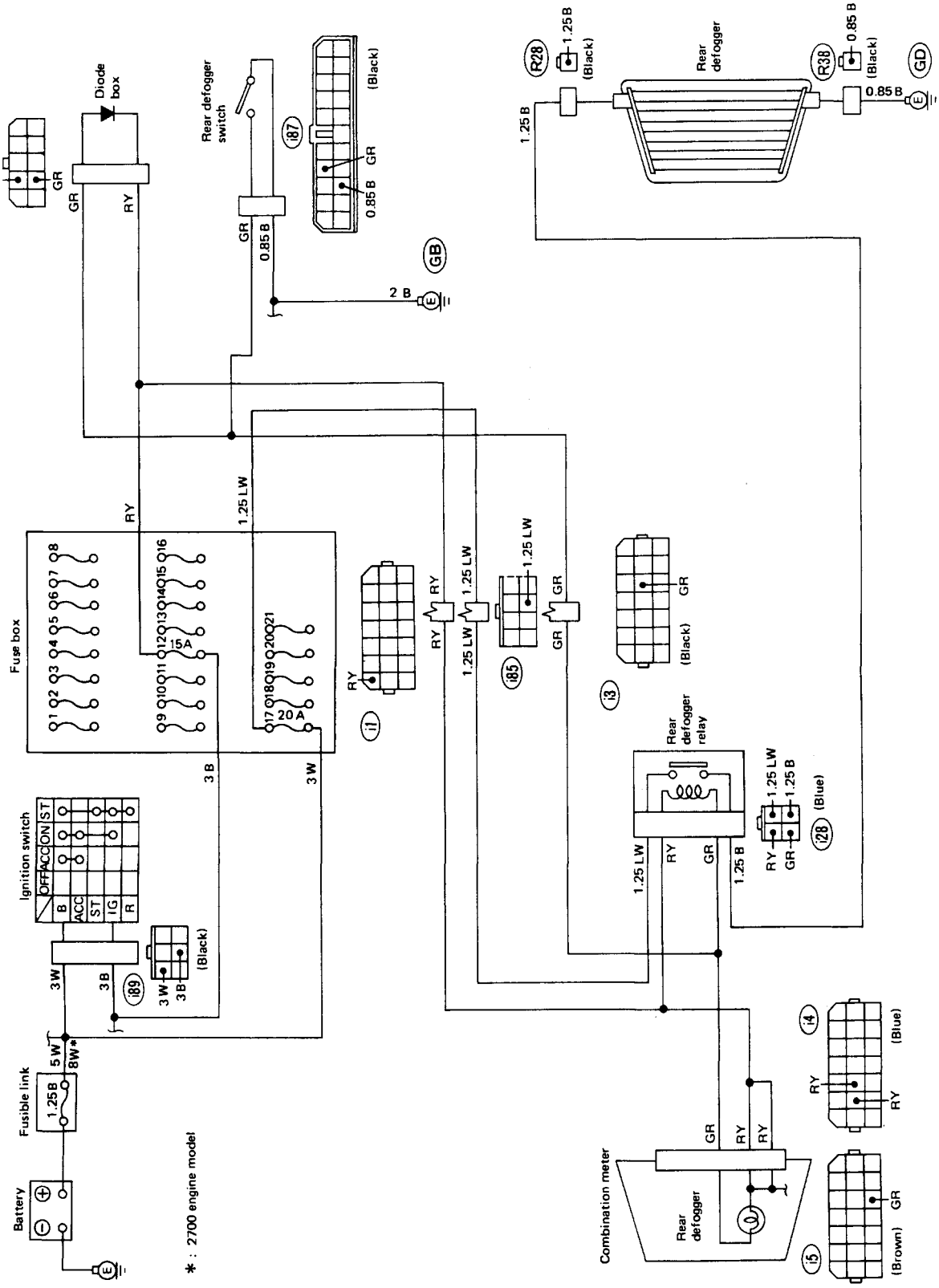

Fig. 59

L6-1747

(1) Meter pilot lamp does not come on.

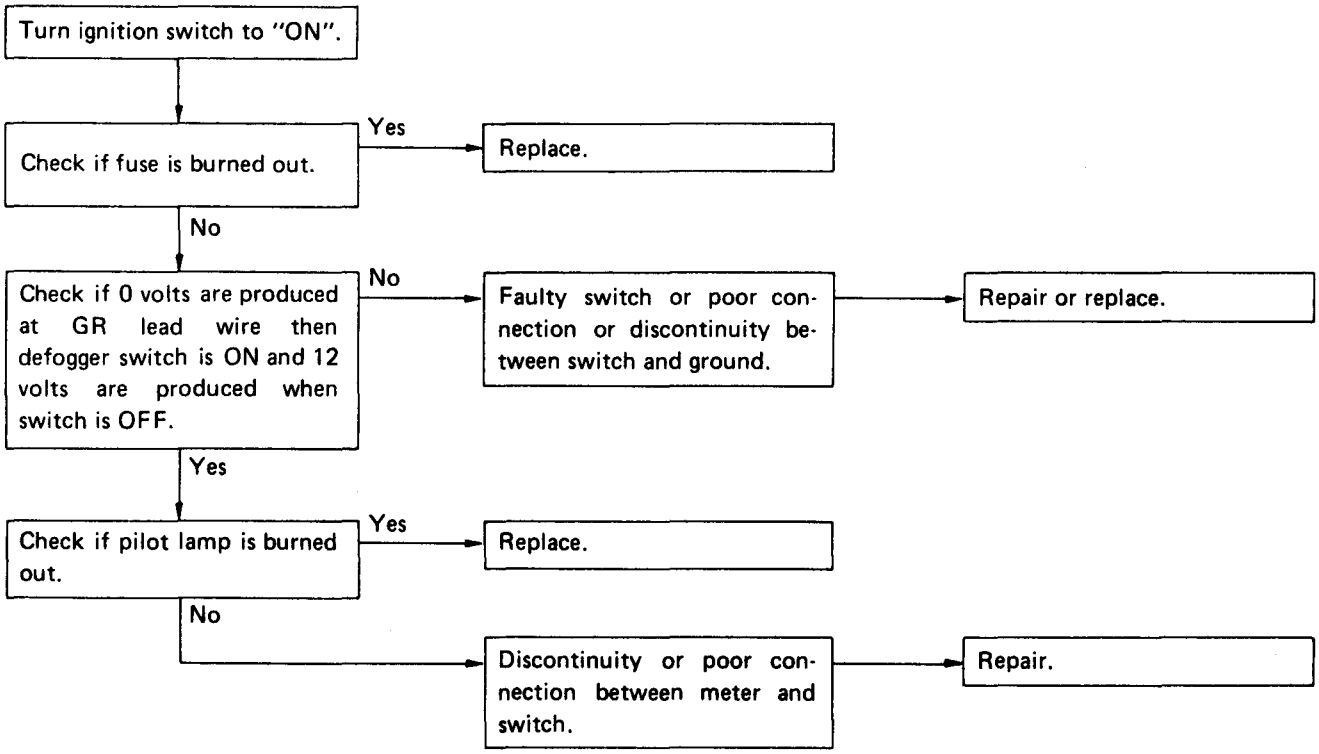

(2) Deffoger does not operate.

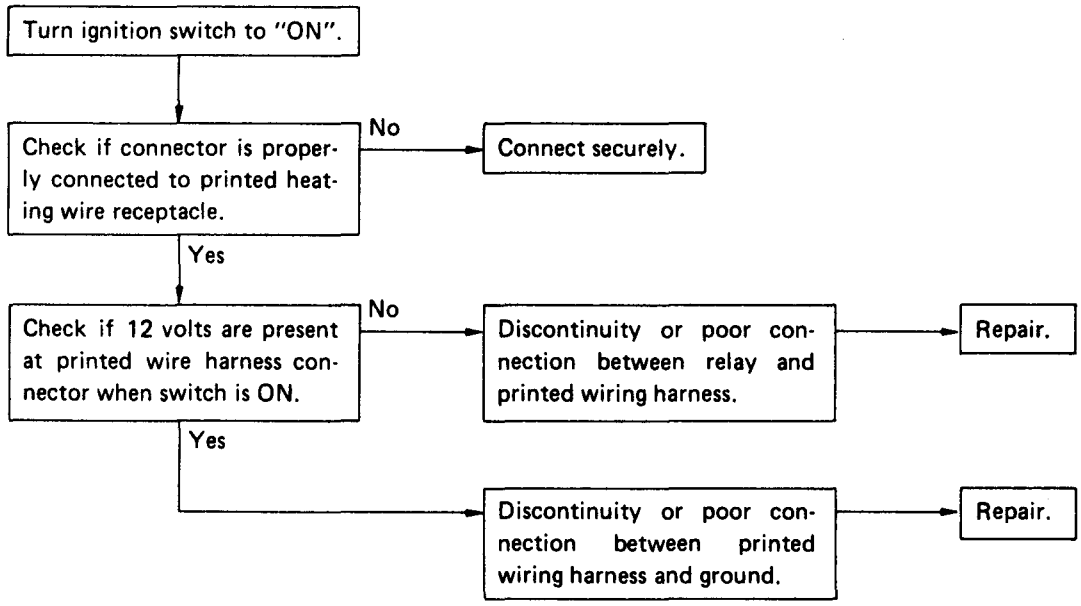

Remote Controlled Rearview Mirror

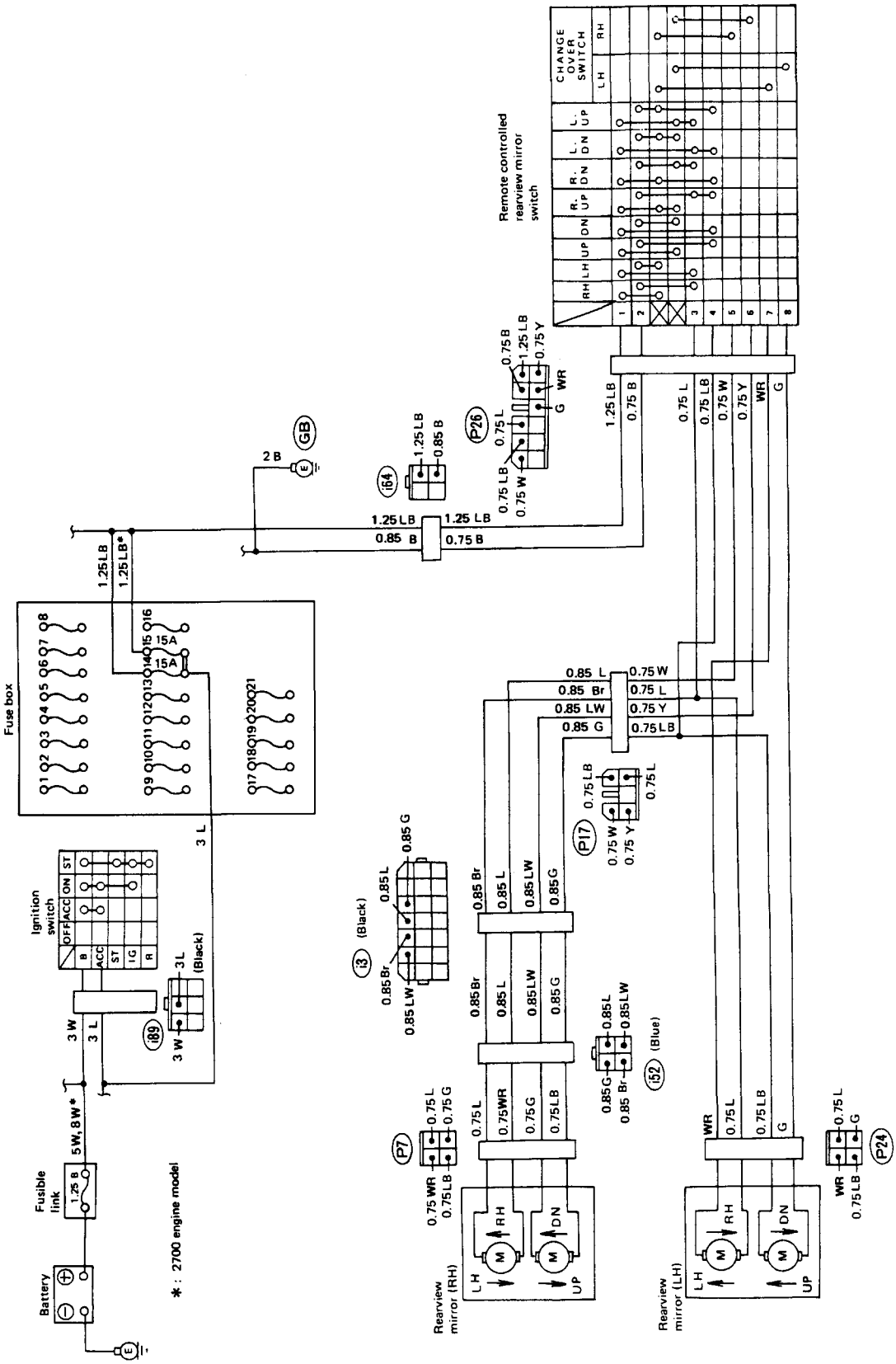

Fig. 60

L6-1748

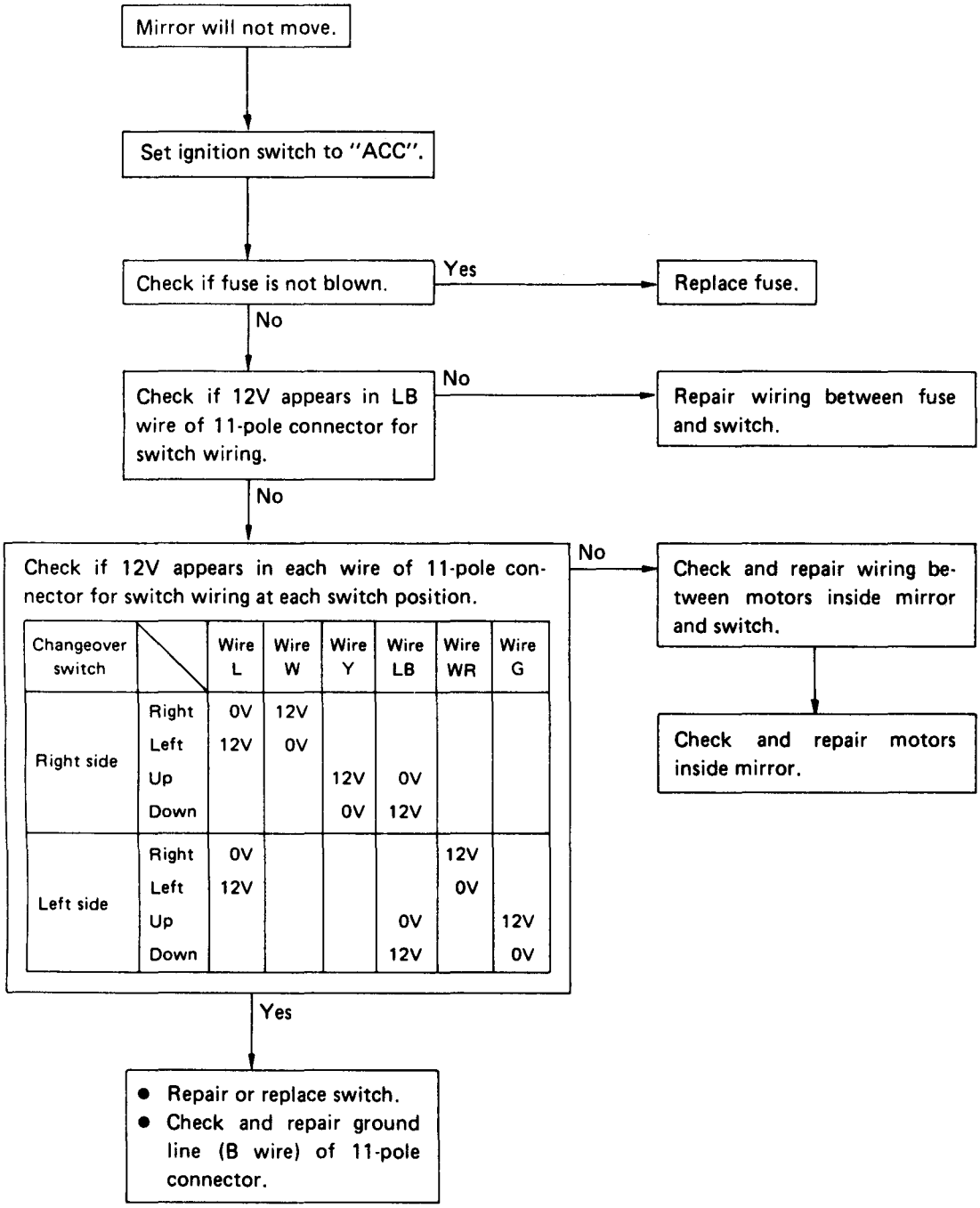

Changeover switch		Wire L	Wire W	Wire Y	Wire LB	Wire WR	Wire G
Right side	Right	0V	12V				
	Left	12V	0V				
	Up			12V	0V		
	Down			0V	12V		
Left side	Right	0V				12V	
	Left	12V				0V	
	Up				0V		12V
	Down				12V		0V

Power Window

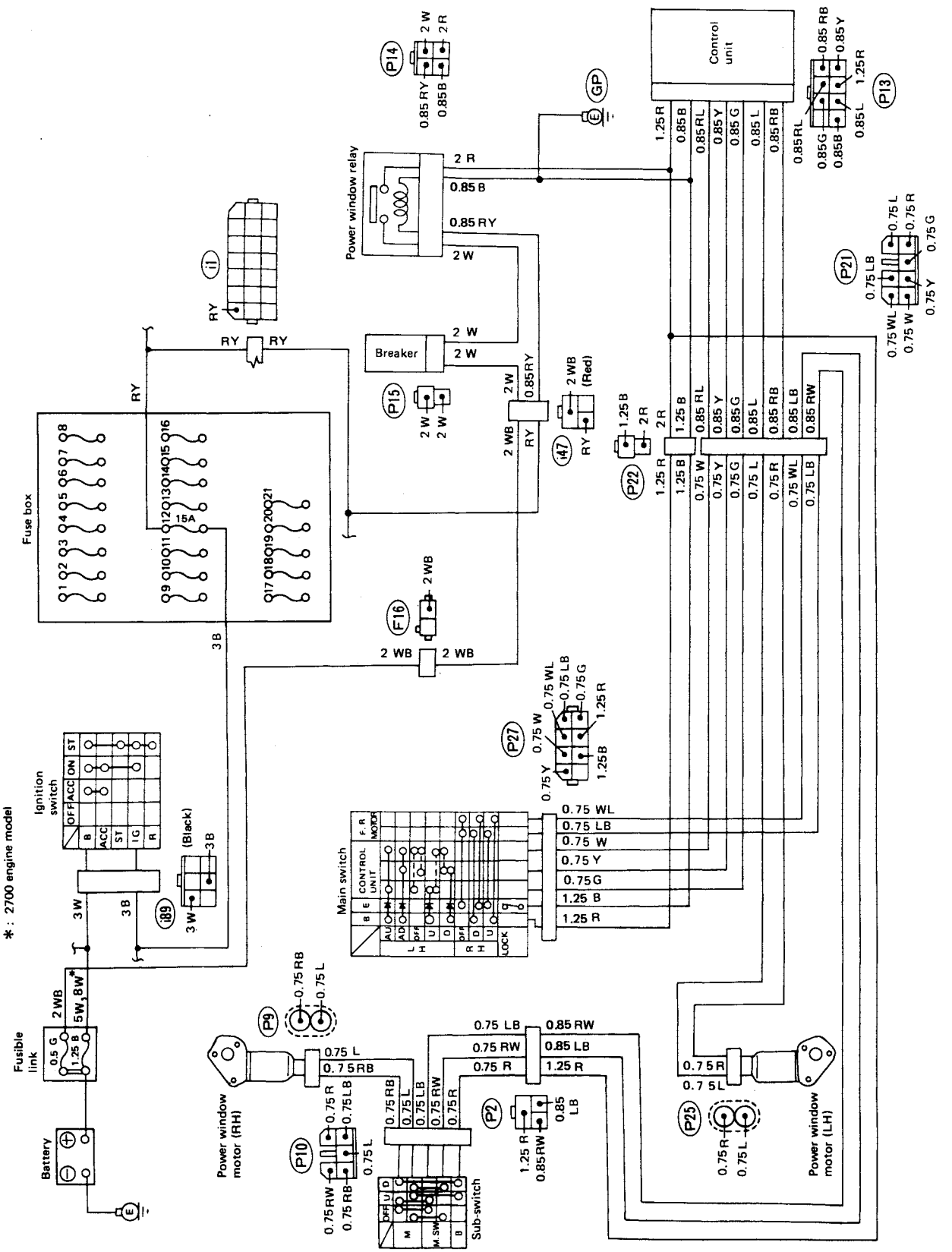

Fig. 61

L6-1749

(1) All motors do not operate.

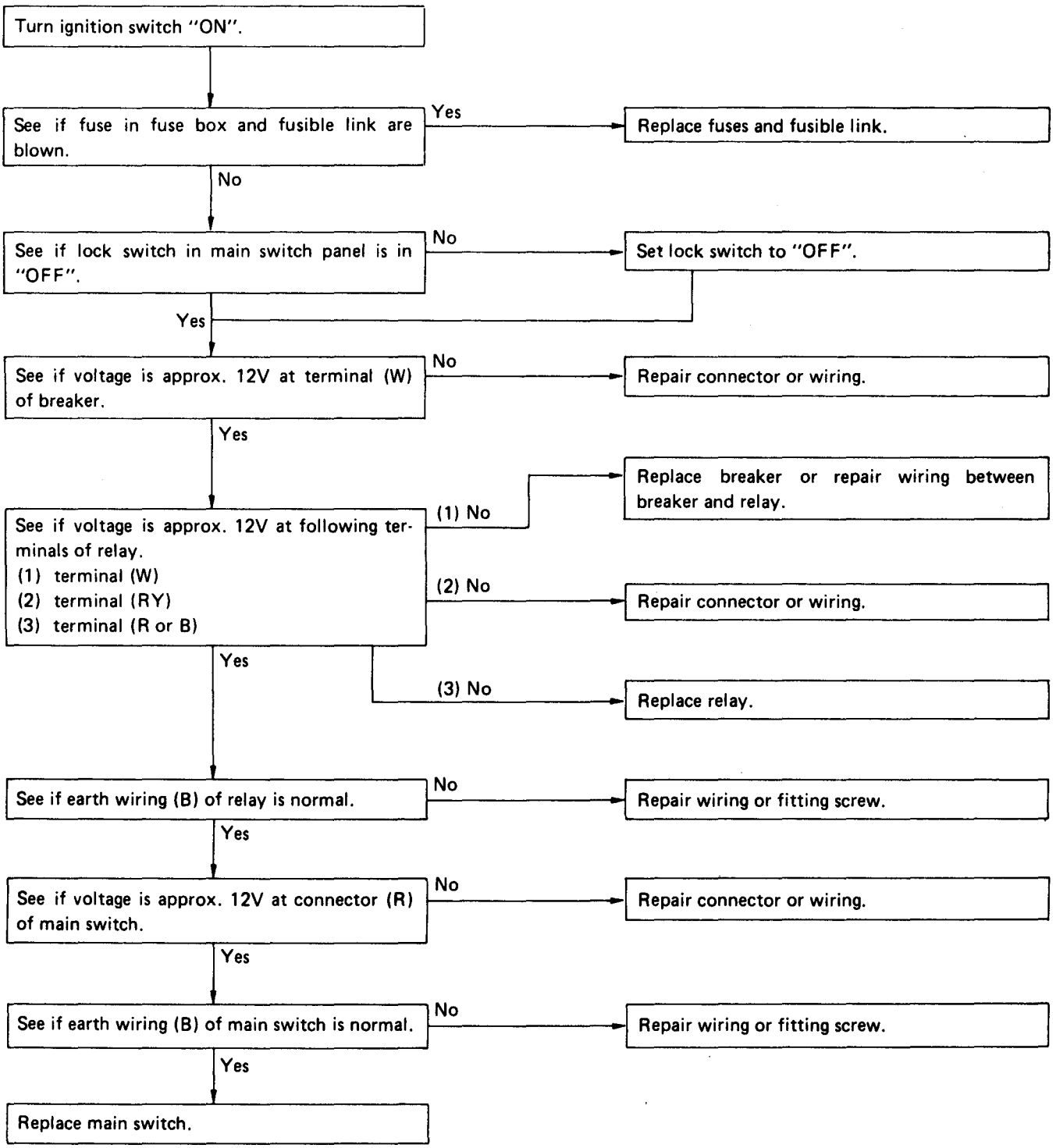

(2) Passenger's window operation is defective.

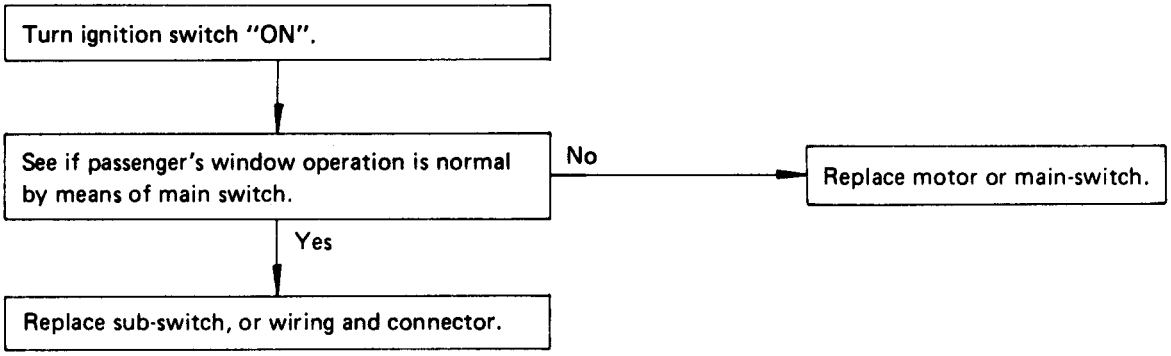

(3) Driver's window operation is defective.

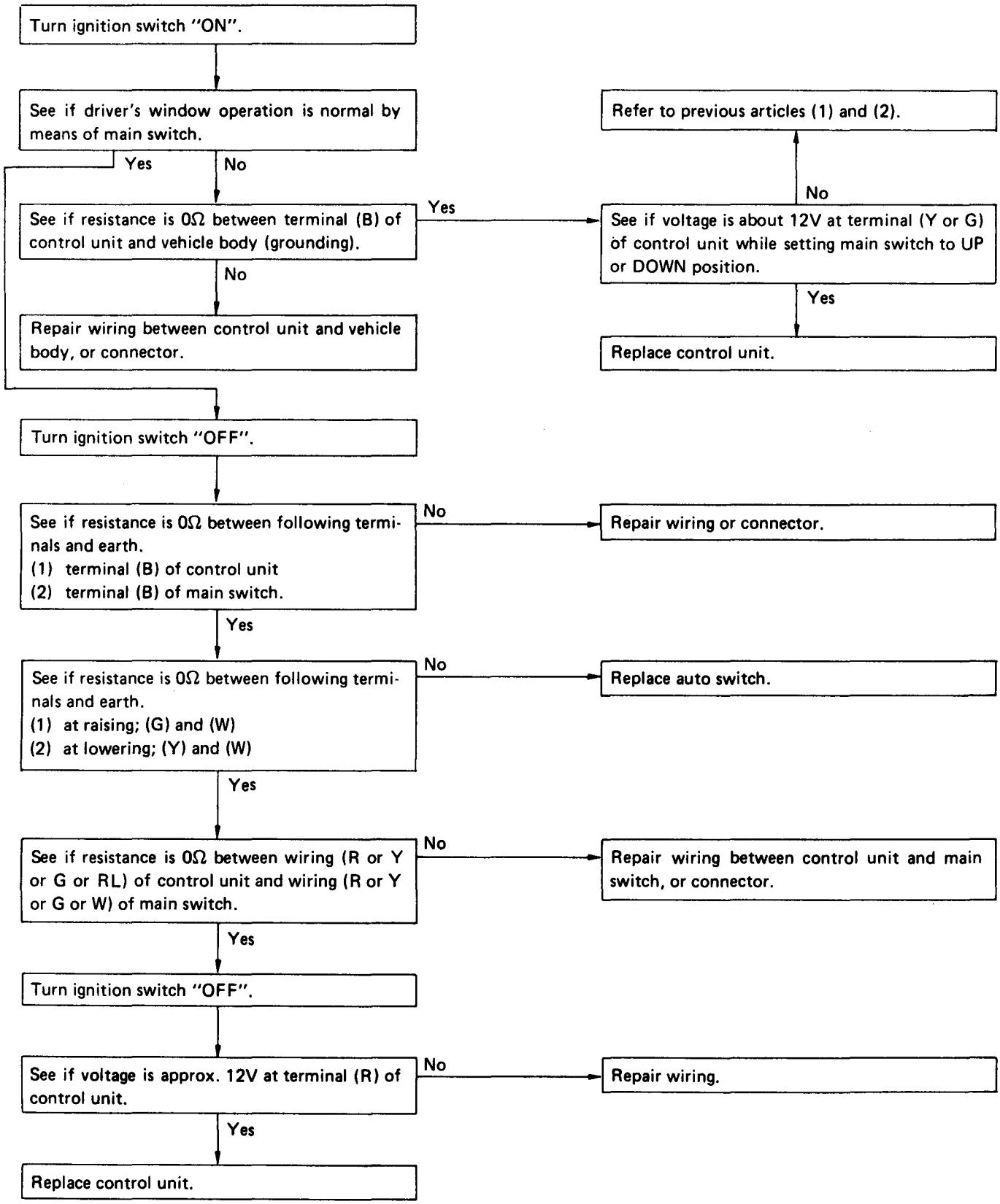

Door Lock System

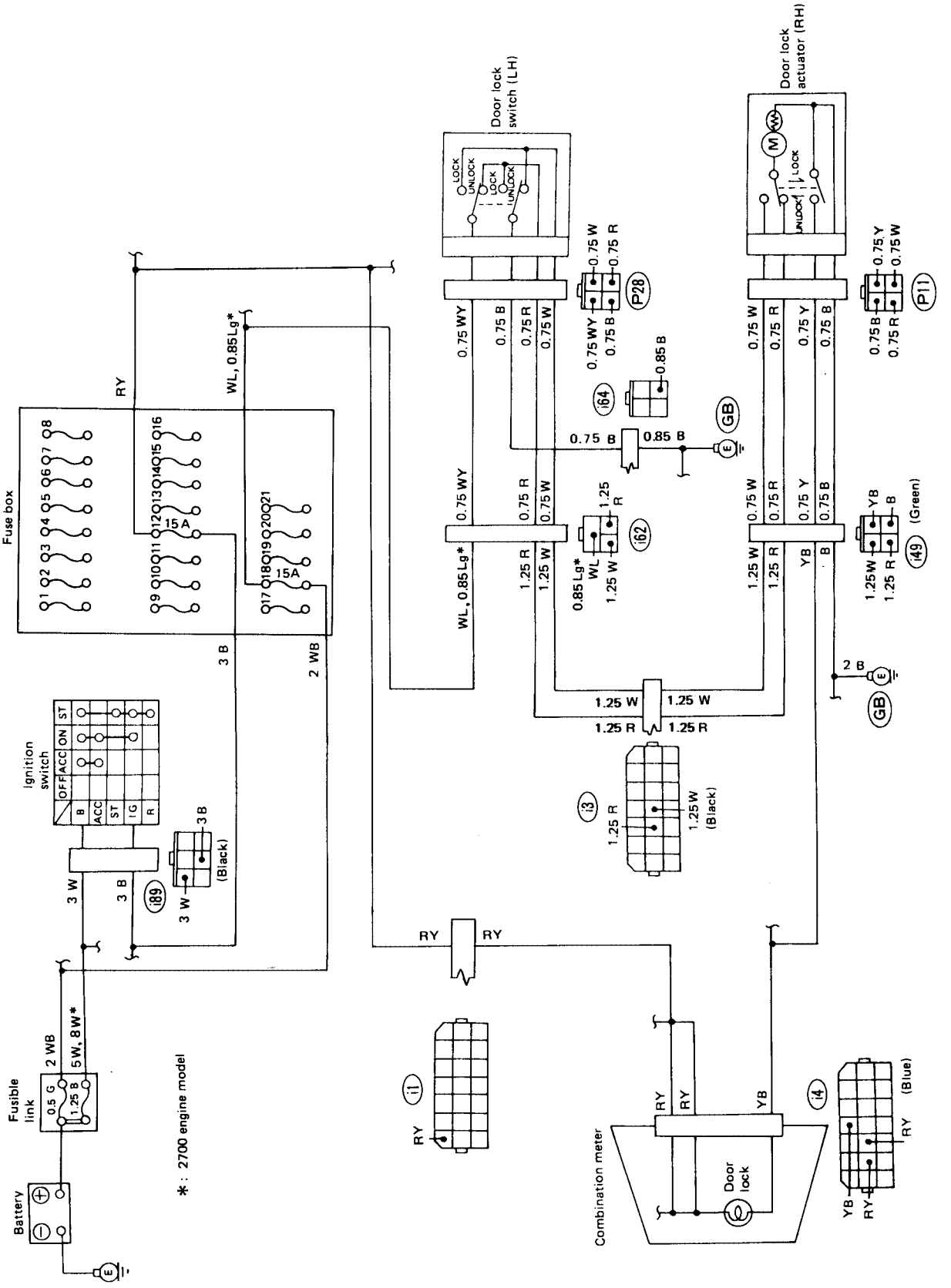

Fig. 62

L6-1750

Speed Alarm

-Remove

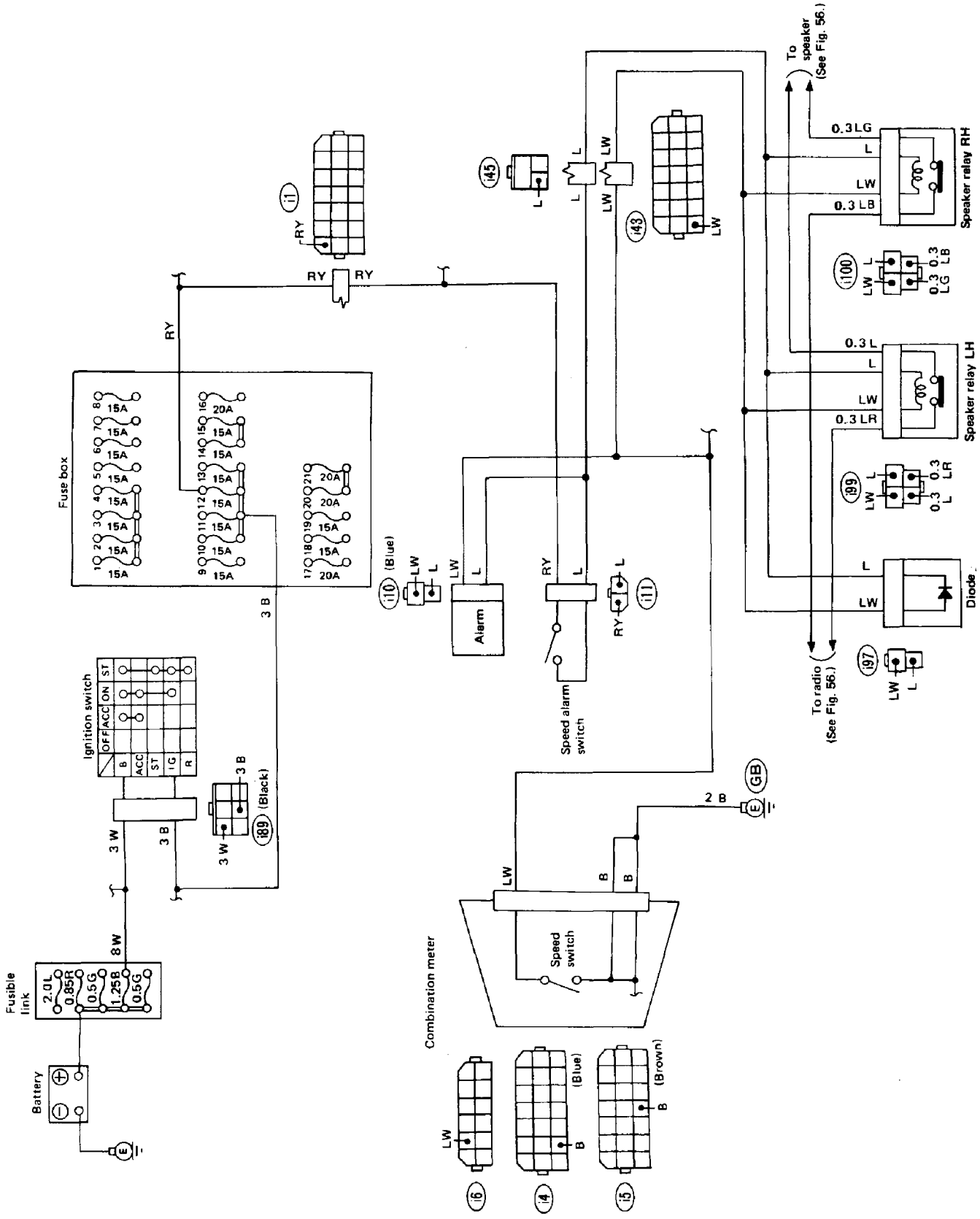

Fig. 63

L6-1751

(1) Speed alarm buzzer does not sound when car speed is 88 km/h (55 MPH).

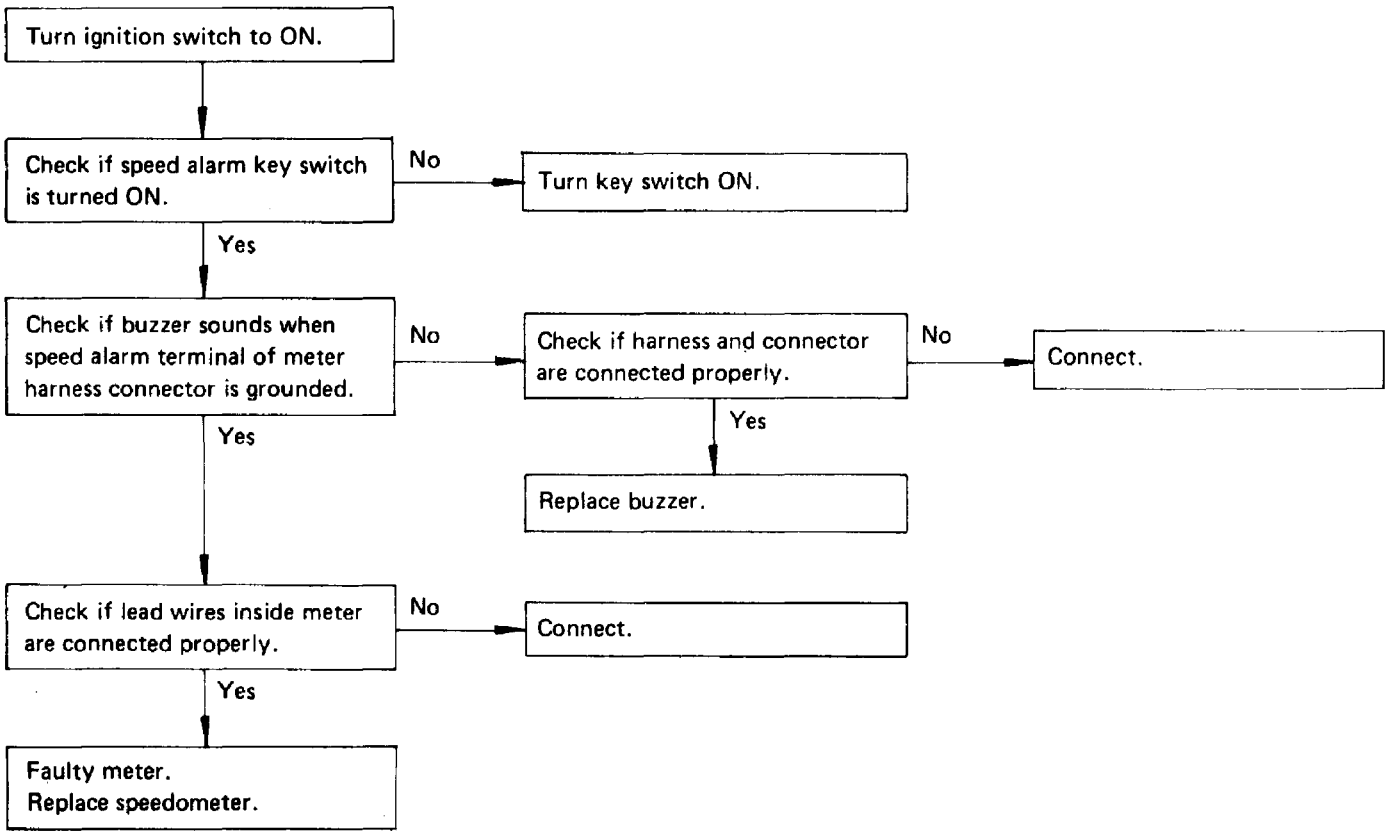

(2) Speed alarm buzzer continues to sound.

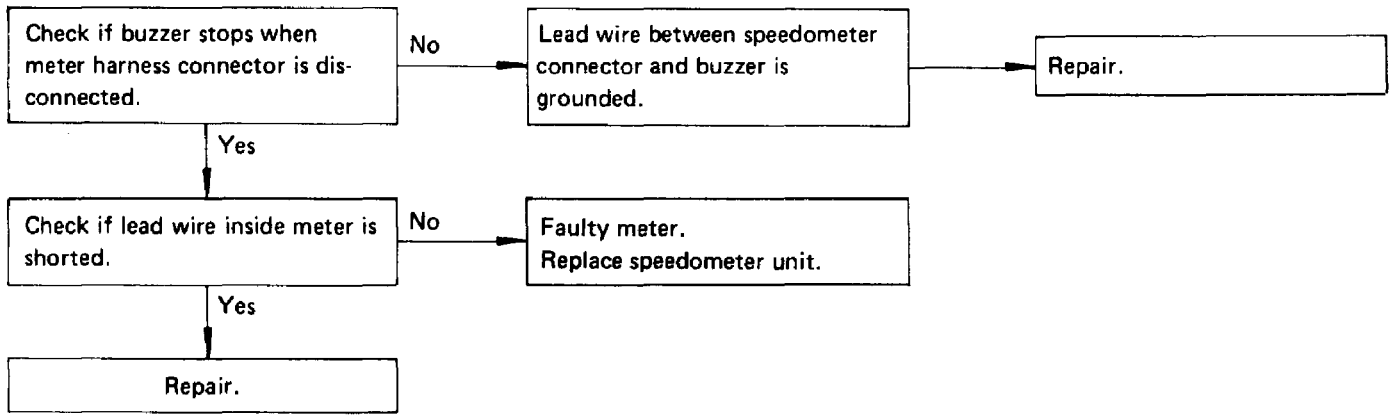

Cruise Control System

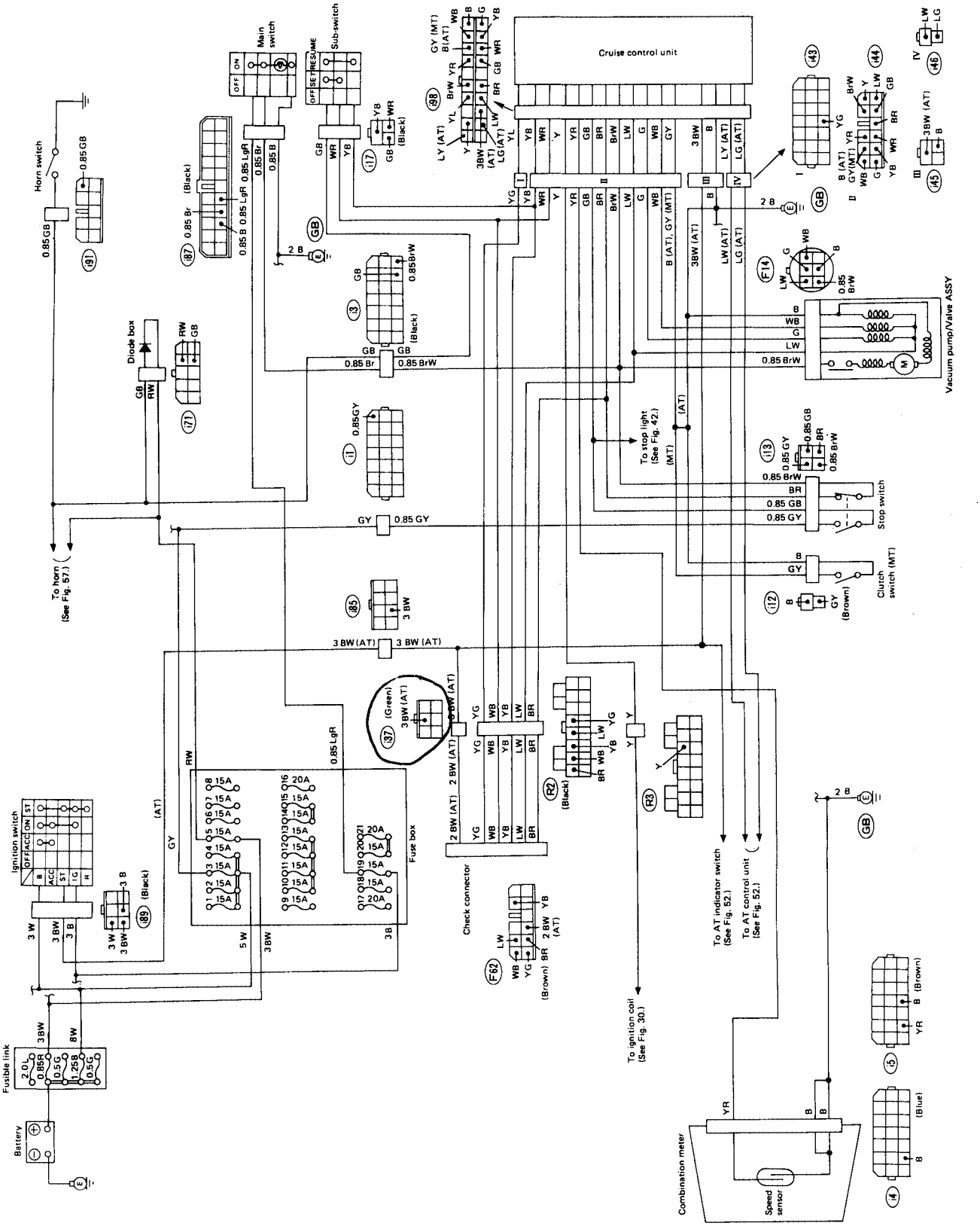

Fig. 64

L6-1752

(1) Cruise control will not operate (Car speed cannot be set)

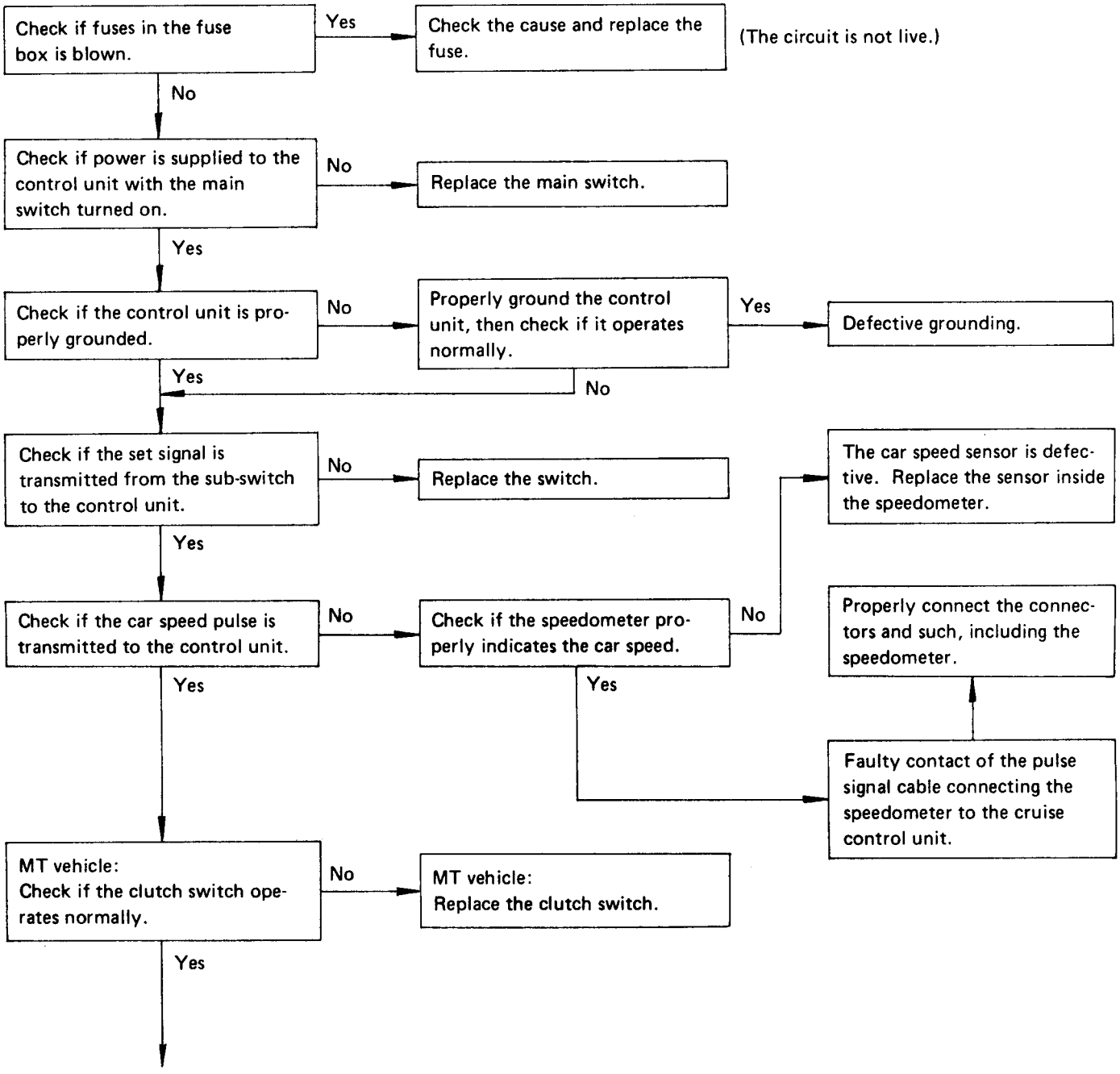

To be continued on next page.

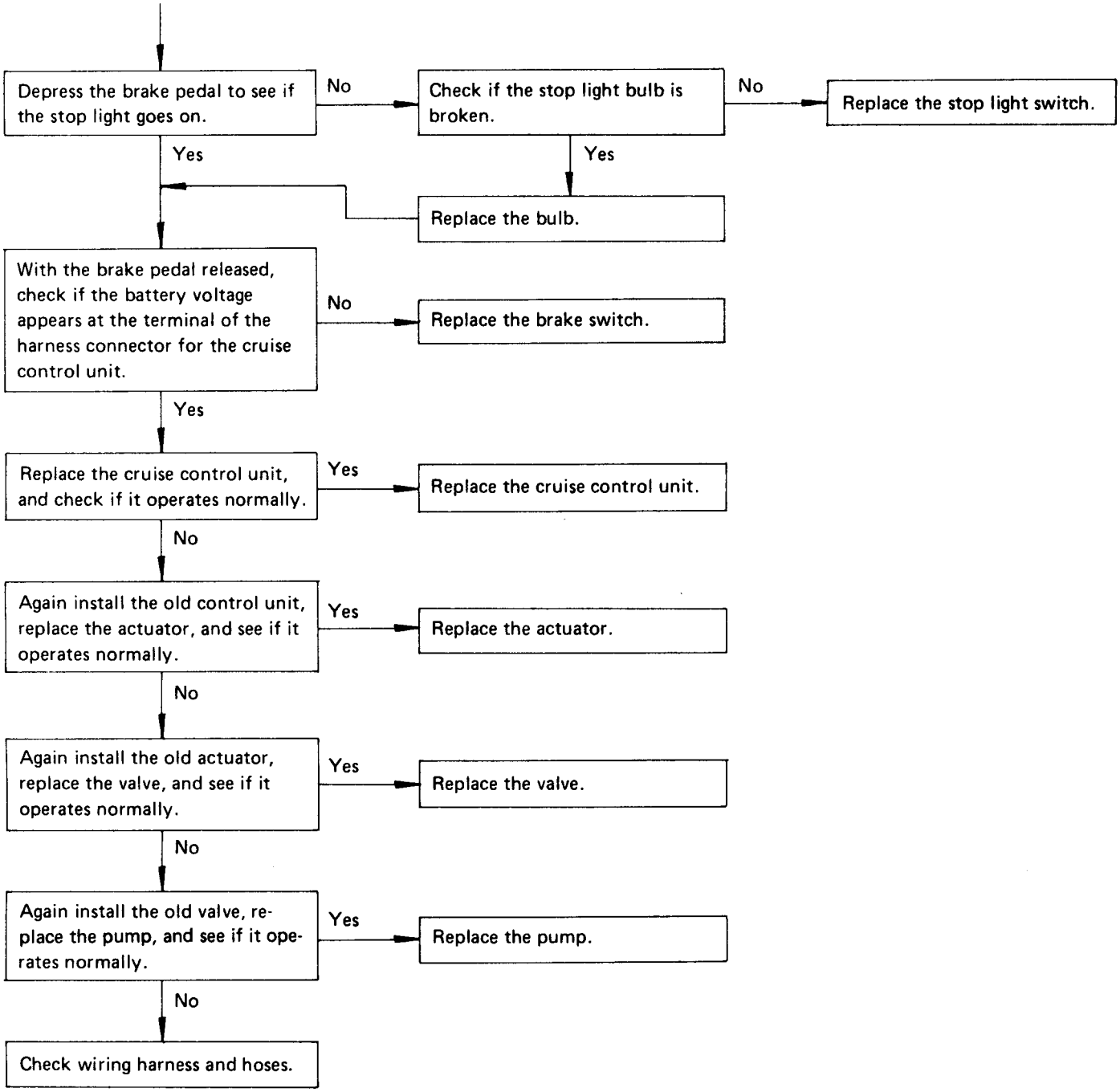
Depress the brake pedal to see if the stop light goes on.
No
Check if the stop light bulb is broken.
No
Replace the stop light switch.
Yes
Yes
Replace the bulb.
With the brake pedal released, check if the battery voltage appears at the terminal of the harness connector for the cruise control unit.
No
Replace the brake switch.
Yes
Replace the cruise control unit, and check if it operates normally.
Yes
Replace the cruise control unit.
No
Again install the old control unit, replace the actuator, and see if it operates normally.
Yes
Replace the actuator.
No
Again install the old actuator, replace the valve, and see if it operates normally.
Yes
Replace the valve.
No
Again install the old valve, replace the pump, and see if it operates normally.
Yes
Replace the pump.
No
Check wiring harness and hoses.

(2) Resume function or coasting function will not operate.

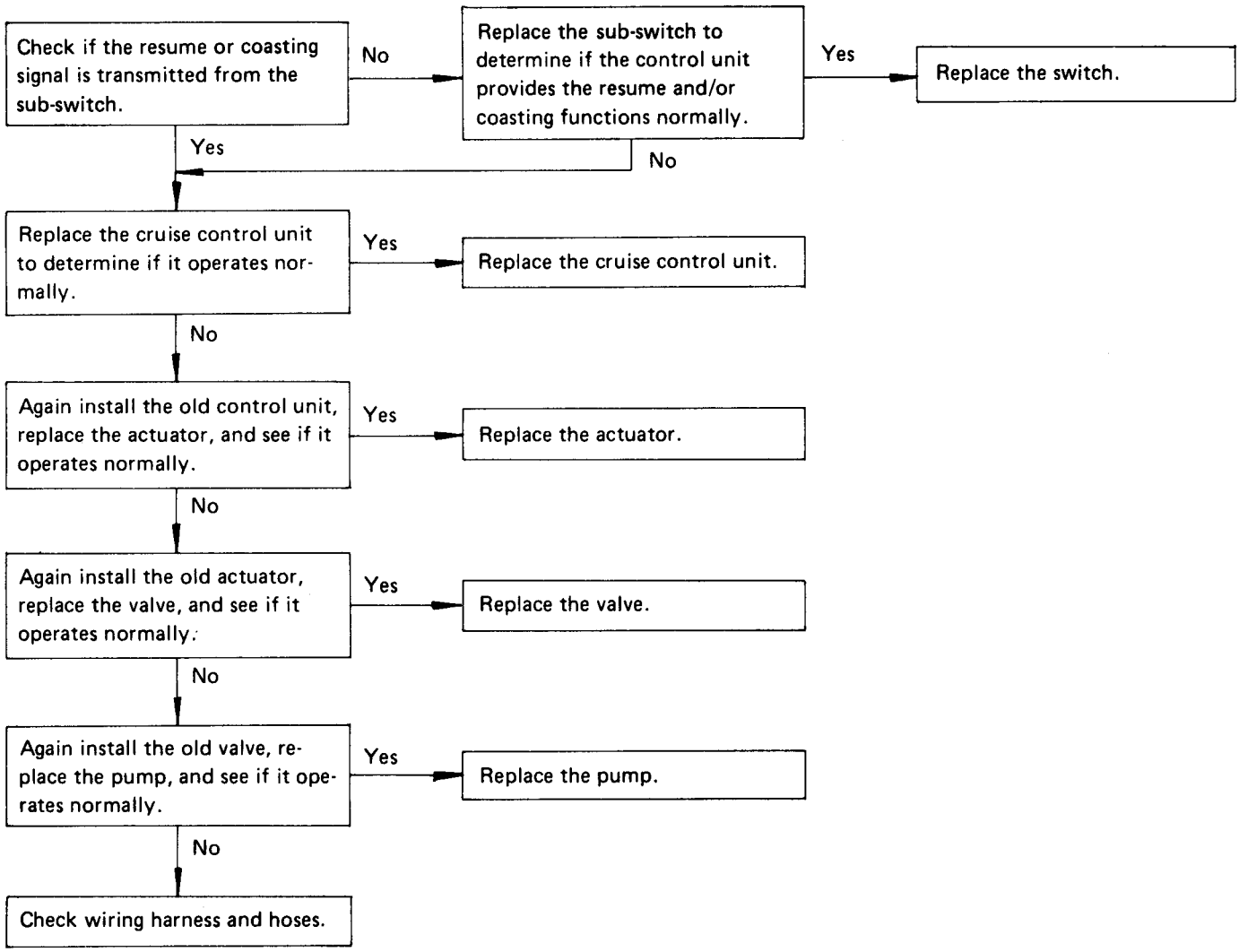

(3) Cancel function will not operate.

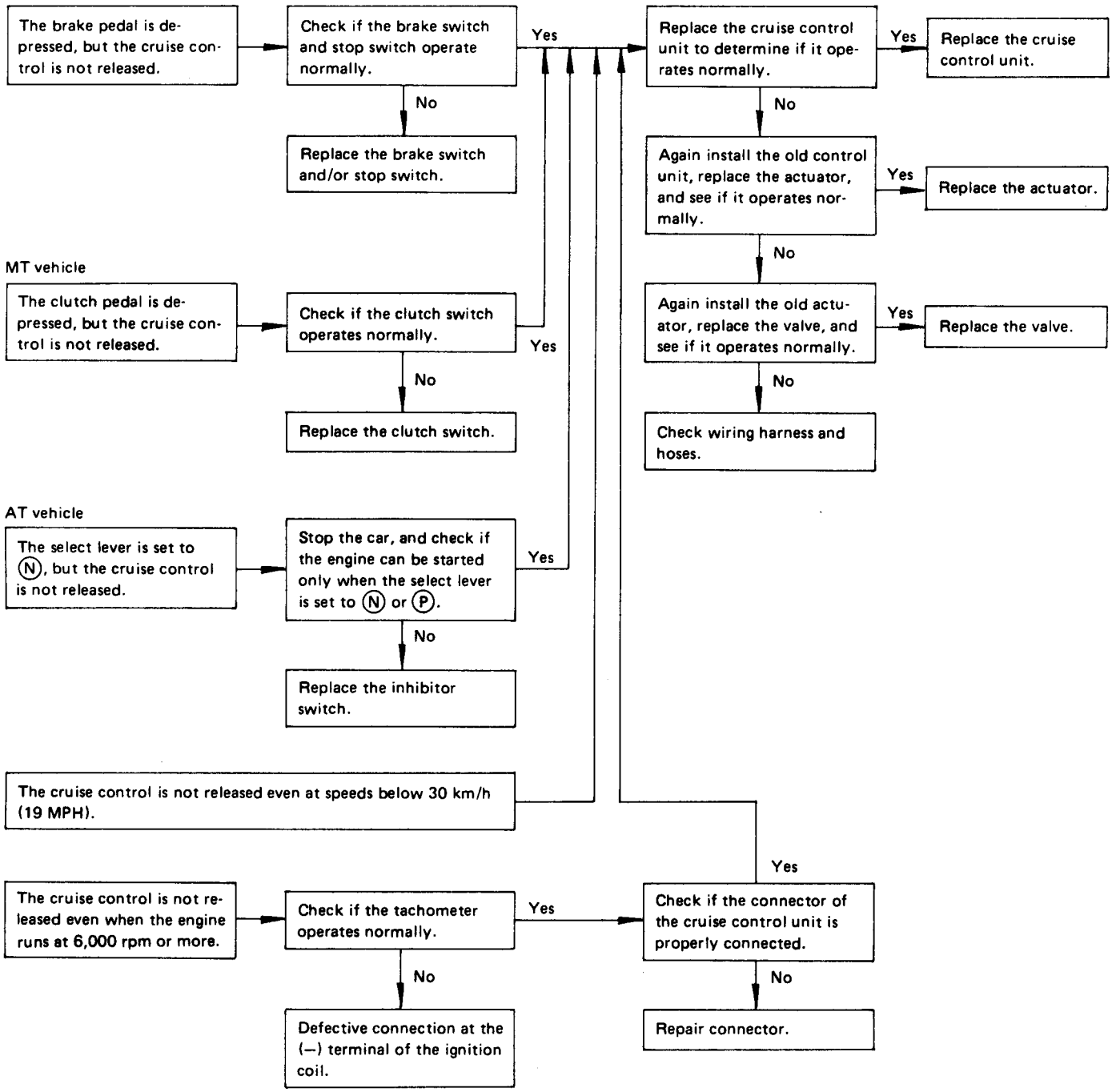

Mode Selector

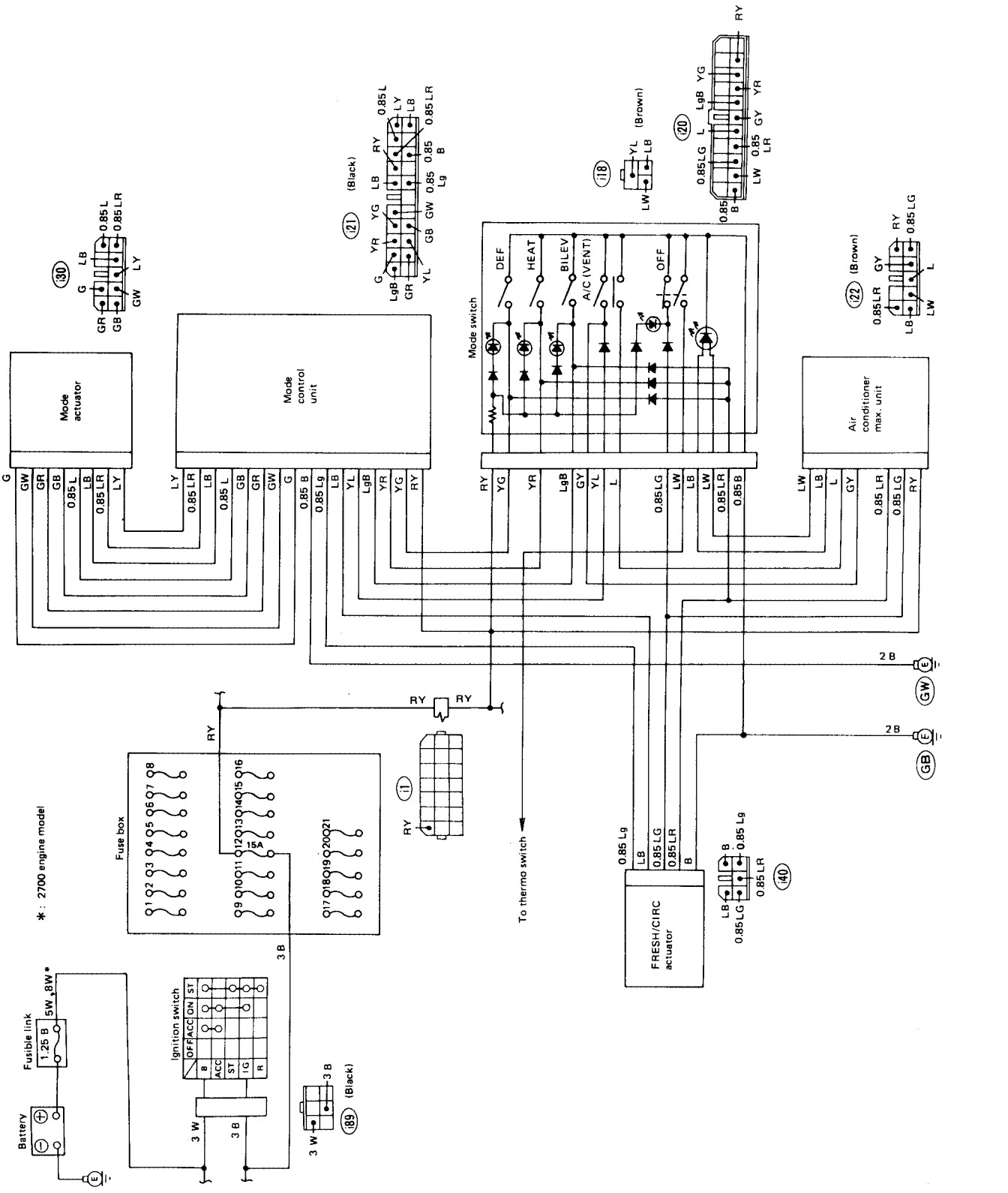

Fig. 65

L6-1753

Blower Motor

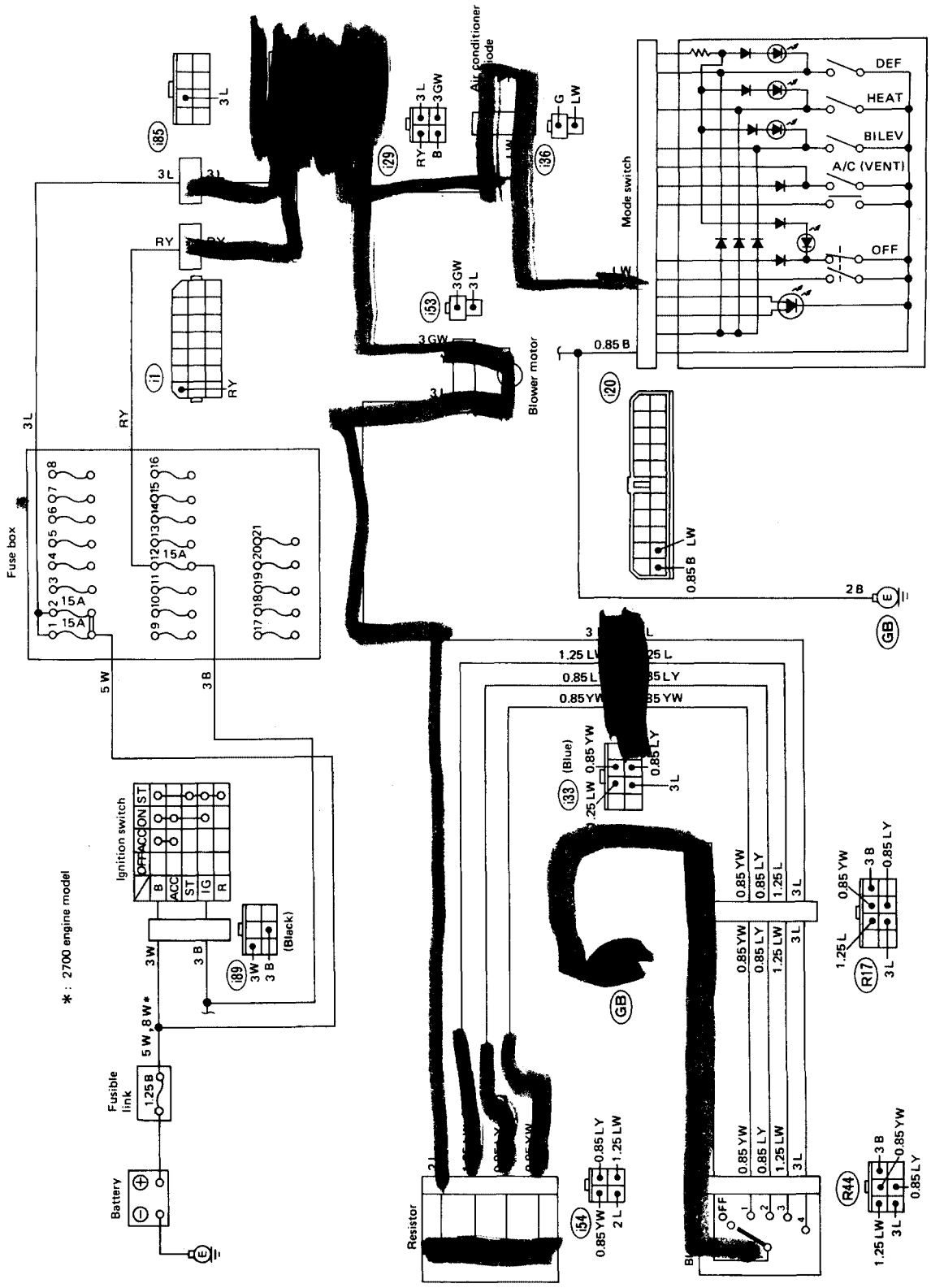

Fig. 66

L6-1755

Pneumatic Suspension System

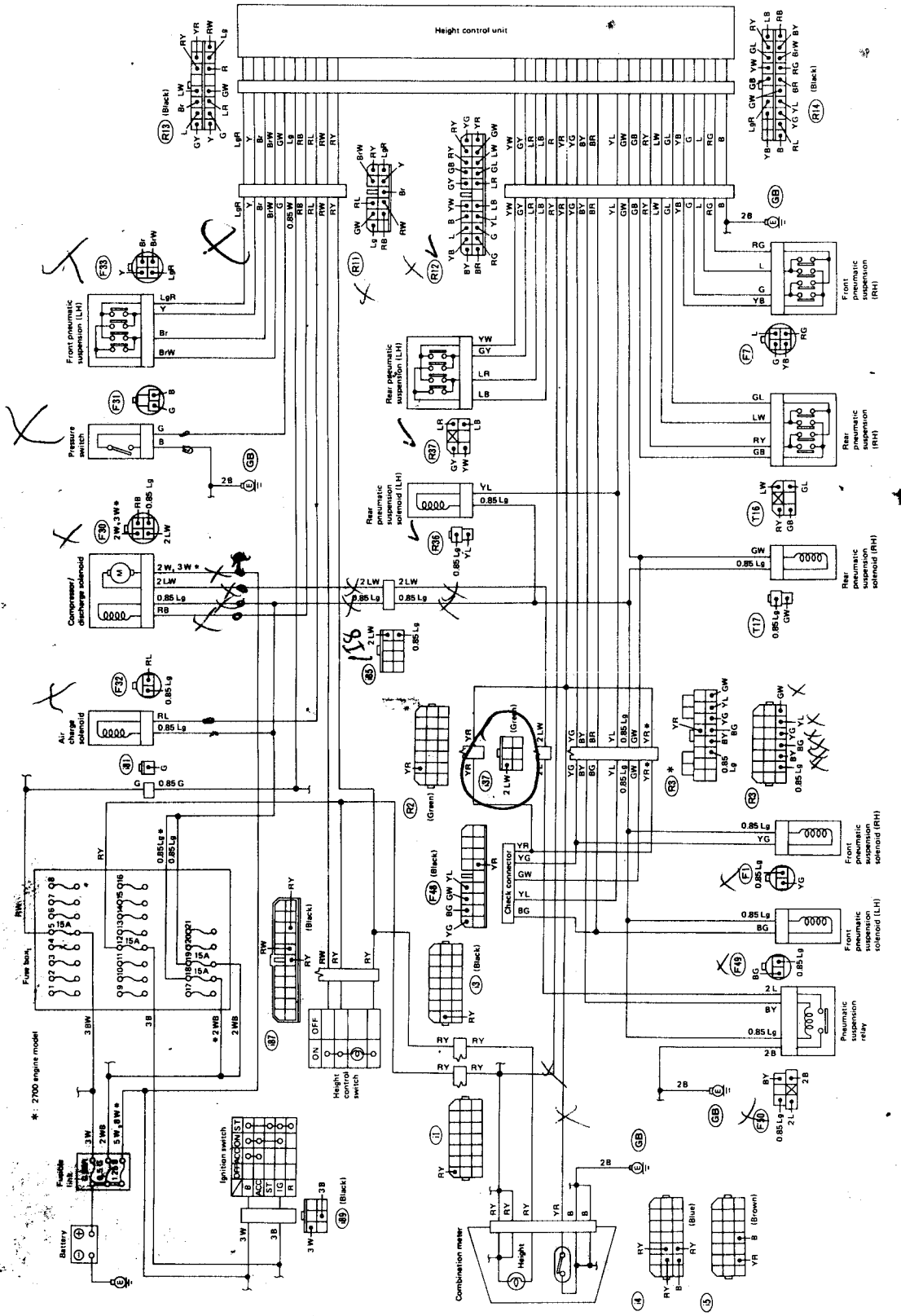

Fig. 67

L6-1756

OVERALL WIRING DIAGRAM

2700 engine model 142
1800 engine model 144

2700 engine model

COMPONENT	GRID LOCATION
A	
AIR CHARGE SOLENOID	B–2
AIR CONDITIONER CUT RELAY (AT)	B–2
AIR CONDITIONER MAX. UNIT	B–2
AIR CONDITIONER RELAY	B–2
AIR CONDITIONER SWITCH	B–2
AIR DISCHARGE SOLENOID	B–2
AIR FLOW METER	B–3
AM/FM RADIO	B–1
ASH TRAY ILLUMINATION LIGHT	A–3
AT CONTROL UNIT	B–3
AT CONTROL (TRANSMISSION)	B–3
AT SELECT LEVER ILLUMINATION LIGHT	A–3
AUTO ANTENNA	B–1
AUTO ANTENNA UNIT	B–1
AUTOMATIC SEAT BELT CONTROL UNIT	A–2
B	
BACK-UP LIGHT (LH)	A–3
BACK-UP LIGHT (RH)	A–3
BACK-UP LIGHT SWITCH (MT)	A–3
BATTERY	A–1
BEAM INDICATOR LIGHT	A–3
BEAM & PASSING LIGHT SWITCH	A–3
BLOWER MOTOR	B–2
BLOWER RELAY	B–2
BLOWER MOTOR SWITCH	B–2
BLOWER SWITCH ILLUMINATION LIGHT	A–3
BRAKE FLUID LEVEL SENSOR	A–1
BRAKE FLUID LEVEL WARNING LIGHT	A–1
BUZZER	A–4
BY-PASS AIR CONTROL	B–4
C	
CAR SPEED SENSOR	B–2
CAR SPEED SENSOR	A–4
CHARGE INDICATOR LIGHT	A–1
CHIME	A–2
CHIME SWITCH	A–2
CIGARETTE LIGHTER	A–4
CIRCUIT BRAKER	A–2
CLEARANCE LIGHT (LH)	A–3
CLEARANCE LIGHT (RH)	A–3
CLOCK	A–4
CLOCK ILLUMINATION LIGHT	A–3
CLUTCH SWITCH (MT)	B–1
COMPRESSOR	B–2
COMPRESSOR	B–3
COMPRESSOR RELAY	B–3
CRANK ANGLE SENSOR	A–1
CRUISE CONTROL UNIT	B–1
D	
DIFF. LOCK SOLENOID	A–2
DIFF. LOCK SWITCH ILLUMINATION LIGHT	A–3
DIFF. LOCK SWITCH	A–2
DIFF. LOCK PILOT LAMP	A–2
DIFF. UNLOCK SOLENOID	A–2
DISTRIBUTOR	A–1
DOOR LOCK PILOT LAMP	B–1
DOOR LOCK SWITCH	B–1
DOOR SWITCH (LH)	A–2
DOOR SWITCH (RH)	A–2
F	
FADE CONTROL	B–1
F/C ACTUATOR	B–2
FL SENSOR	B–2
55 mph SENSOR	A–4
FOG LAMP SWITCH ILLUMINATION LIGHT	A–3
FRONT DOOR ACTUATOR (RH)	B–1
FRONT DOOR MOTOR (LH)	A–2
FRONT DOOR MOTOR (RH)	A–3
FRONT DOOR SWITCH (LH)	A–2
FRONT DOOR SWITCH (RH)	A–2
FRONT DOOR WARNING LIGHT (LH)	A–2
FRONT DOOR WARNING LIGHT (RH)	A–2
FRONT FOG LAMP (LH)	A–3
FRONT FOG LAMP (RH)	A–3
FRONT FOG LAMP RELAY	A–3
FRONT FOG LAMP SWITCH	A–3
FRONT LIMIT SWITCH (LH)	A–2
FRONT LIMIT SWITCH (RH)	A–2
FRONT SIDE MARKER LIGHT (LH)	A–3
FRONT SIDE MARKER LIGHT (RH)	A–3
FRONT SPEAKER (LH)	B–1
FRONT SPEAKER (RH)	B–1
FRONT VALVE (LH)	B–2
FRONT VALVE (RH)	B–2
FR SENSOR	B–2
FUEL GAUGE	A–1
FUEL GAUGE UNIT	A–1
FUEL INJECTOR	B–3
FUEL PUMP	B–4
FUEL PUMP RELAY	B–4
FUSE ① (15A)	B–2
FUSE ② (15A)	B–2
FUSE ③ (15A)	A–1
FUSE ④ (15A)	A–3
FUSE ⑤ (15A)	A–4
FUSE ⑥ (15A)	A–3
FUSE ⑦ (15A)	A–3
FUSE ⑧ (15A)	A–3
FUSE ⑨ (15A)	A–1
FUSE ⑩ (15A)	A–4
FUSE ⑪ (15A)	A–1
FUSE ⑫ (15A)	A–1
FUSE ⑬ (15A)	B–4
FUSE ⑭ (15A)	A–4
FUSE ⑮ (15A)	B–4
FUSE ⑯ (20A)	A–4
FUSE ⑰ (20A)	B–1
FUSE ⑱ (15A)	B–1
FUSE ⑲ (15A)	B–2
FUSE ⑳ (15A)	B–2
FUSE ㉑ (20A)	B–2
FUSE (OP) (15A)	B–2
FUSE (OP) (15A)	A–3
FWD SWITCH	B–3
1-HOLD SWITCH	B–3
1-HOLD SWITCH ILLUMINATION LIGHT	A–3
G	
GLOVE BOX LIGHT	A–3
GLOVE BOX SWITCH	A–3
H	
HEADLIGHT (RH)	A–3
HEADLIGHT (LH)	A–3
HEADLIGHT WASHER SWITCH	A–2
HEADLIGHT WASHER MOTOR	A–2
HEADLIGHT WASHER UNIT	A–2
HEATER RELAY	B–4
HEIGHT CONTROL PILOT LAMP	B–2
HEIGHT CONTROL SWITCH	B–2
HIGH MOUNTED STOP LIGHT	A–1
HIGH/LOW PRESSURE SWITCH	B–2
HORN	A–4
HORN SWITCH	A–4
I	
IC ALTERNATOR	A–1
IGNITION COIL	A–1
IGNITION RELAY	B–4
IGNITION SWITCH	A–1
ILLUMINATION CONTROL	A–3
INHIBITOR SWITCH (AT)	A–1
INHIBITOR SWITCH	B–3
K	
KEY WARNING SWITCH	A–2
KNOCK SENSOR	A–1
L	
LAP BELT SWITCH (LH)	A–2
LICENSE LIGHT (LH)	A–3
LICENSE LIGHT (RH)	A–3
LIGHTING RELAY (LH)	A–3
LIGHTING RELAY (RH)	A–3
LIGHTING SWITCH	A–3
LOCK SWITCH	A–3
LOW FUEL WARNING LIGHT	A–1
M	
MAIN FAN MOTOR	B–2
MAIN FAN RELAY	B–2
MAIN SWITCH	B–1
METER ILLUMINATION LIGHT	A–3
MODE ACTUATOR	B–2
MODE CONTROL SWITCH	B–2
MODE CONTROL UNIT	B–2
MPFI CONTROL UNIT	A–1
MPFI CONTROL UNIT	B–3
MOTOR (LH)	A–2
MOTOR PUMP ASSY	B–4
MOTOR (RH)	A–2
N	
NEUTRAL SWITCH (MT)	B–4
NOISE CONDENSER	A–1
O	
O_2 SENSOR	B–4
OIL PRESSURE GAUGE	A–1
OIL PRESSURE UNIT	A–1
OUTSIDE TEMPERATURE SENSOR	B–4
P	
PARKING BRAKE WARNING LIGHT	A–1
PARKING BRAKE SWITCH	A–1
PARKING LIGHT SWITCH	A–3
PILOT LAMP (2)	B–3
PILOT LAMP (3)	B–3
PILOT LAMP (D)	B–3
PILOT LAMP (N)	B–3
PILOT LAMP (P)	B–3
PILOT LAMP (R)	B–3
PILOT LAMP (1-HOLD)	B–3
PILOT LAMP (CHECK ENGINE)	B–3
PILOT LAMP (POWER)	B–3
PILOT LAMP (FWD)	B–3
PILOT LAMP (STEERING)	B–4
PILOT LAMP (AT FLUID TEMPERATURE)	B–3
PNEUMATIC SUSPENSION CONTROL UNIT	B–2
POWER CONTROLLER	B–4
POWER WINDOW RELAY	A–2
POWER WINDOW UNIT	A–2
PULSE COIL	B–2
PURGE CONTROL SOLENOID	B–4
PRESSURE SWITCH	B–2
PRESSURE SWITCH	B–3
R	
RADIO ILLUMINATION LIGHT	A–3
REAR DEFOGGER	B–1
REAR DEFOGGER RELAY	B–1
REAR DEFOGGER PILOT LAMP	B–1
REAR DEFOGGER SWITCH	B–1
REAR LIMIT SWITCH (LH)	A–2
REAR LIMIT SWITCH (RH)	A–2
REAR SIDE MARKER LIGHT (LH)	A–3
REAR SIDE MARKER LIGHT (RH)	A–3
REAR SPEAKER (LH)	B–1
REAR SPEAKER (RH)	B–1
REAR SPEED SENSOR (4WD)	B–3
REAR VALVE (LH)	B–2
REAR VALVE (RH)	B–2
REED SWITCH	B–4
REMOTE CONTROLLED REAR VIEW MIRROR (LH)	A–4
REMOTE CONTROLLED REAR VIEW MIRROR (RH)	A–4
REMOTE CONTROLLED REAR VIEW MIRROR SWITCH	A–4
RESISTOR	B–2
RESISTOR	B–3
RL SENSOR	B–2
RETRACTABLE HEADLIGHT RELAY (LH)	A–3
RETRACTABLE HEADLIGHT RELAY (RH)	A–3
RETRACTOR INDICATOR LIGHT	A–3
RETRACTOR MOTOR (LH)	A–3
RETRACTOR MOTOR (RH)	A–3
RETRACTOR SWITCH	A–3
RETRACTOR TIMER	A–3
ROOM LIGHT	A–2
RR SENSOR	B–2
S	
SEAT BELT SWITCH	A–2
SEAT BELT TIMER	A–2
SEAT BELT WARNING LIGHT	A–2
SHOULDER BELT SWITCH (LH)	A–2
SHOULDER BELT SWITCH (RH)	A–2
SIGNAL CONTROLLER	B–4
SLIP AMPLIFIER	B–2
SPARK PLUG	A–1
SPEAKER RELAY (LH)	B–1
SPEAKER RELAY (RH)	B–1
SPEED SENSOR (FWD)	B–3
SPEED WARNING KEY SWITCH	A–4
SPOT LIGHT (LH)	A–2
SPOT LIGHT (RH)	A–2
SPOT LIGHT SWITCH (LH)	A–2
SPOT LIGHT SWITCH (RH)	A–2
STARTER MOTOR	A–1
STEREO ILLUMINATION LIGHT	A–3
STEERING SENSOR	B–4
STOP LIGHT (LH)	A–1
STOP LIGHT (RH)	A–1
STOP LIGHT SWITCH	A–1
STOP SWITCH	B–1
STOP LIGHT WARNING LIGHT	A–1
SUB-FAN MOTOR	B–2
SUB-FAN RELAY	B–2
SUB-SWITCH	A–2
SUB-SWITCH	B–1
T	
TACHOMETER	A–1
TAIL LIGHT (LH)	A–3
TAIL LIGHT (RH)	A–3
TAIL LIGHT RELAY	A–3
TEMPERATURE GAUGE	A–1
TEMPERATURE GAUGE UNIT	A–1
TEMPERATURE SENSOR	B–4
THERMOSTAT	B–2
THERMO SWITCH	B–2
THROTTLE SENSOR	B–3
TRIP COMPUTER	B–4
TRIP COMPUTER ILLUMINATION LIGHT	A–3
TRUNK ROOM LIGHT	A–4
TRUNK ROOM SWITCH	A–4
TURN SIGNAL & HAZARD SWITCH	A–4
TURN SIGNAL & HAZARD UNIT	A–4
TURN SIGNAL LIGHT (LH)	A–4
TURN SIGNAL LIGHT (RH)	A–4
TURN SIGNAL SWITCH	A–4
V	
VACUUM PUMP	B–1
VANITY MIRROR ILLUMINATION LIGHT	A–3
VOLTMETER	A–1
W	
WASHER MOTOR	A–4
WASHER SWITCH	A–4
WATER TEMPERATURE SENSOR	B–3
WIPER INTERMITTENT UNIT	A–4
WIPER SELECTOR SWITCH	A–4
WIPER SWITCH	A–4
WIPER MOTOR	A–4

2700 cc engine model

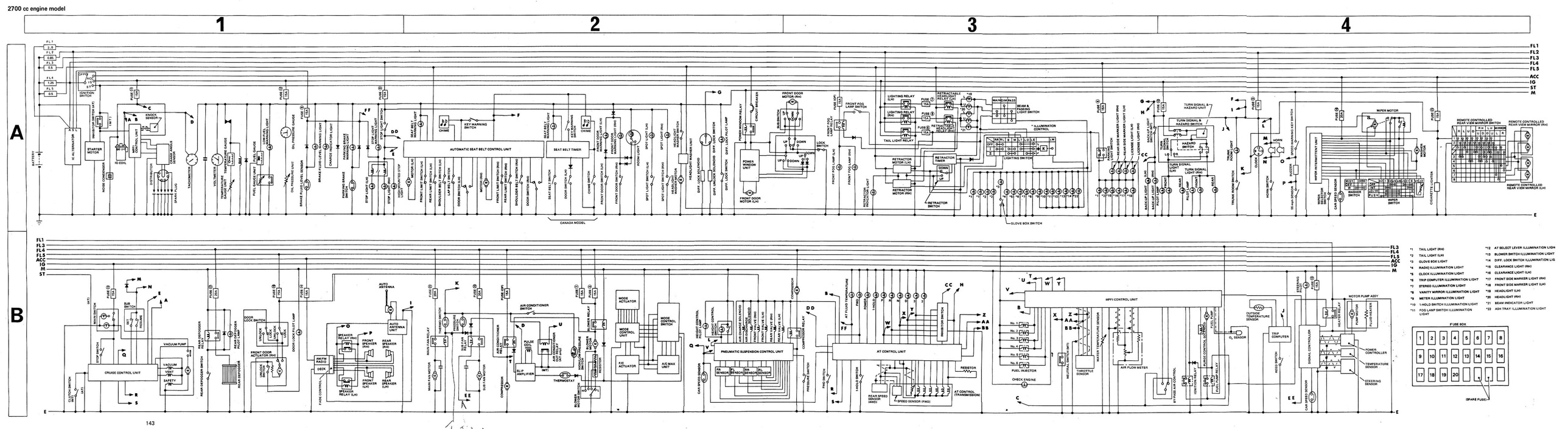

*1 TAIL LIGHT (RH)
*2 TAIL LIGHT (LH)
*3 GLOVE BOX LIGHT
*4 RADIO ILLUMINATION LIGHT
*5 CLOCK ILLUMINATION LIGHT
*6 TRIP COMPUTER ILLUMINATION LIGHT
*7 STEREO ILLUMINATION LIGHT
*8 VANITY MIRROR ILLUMINATION LIGHT
*9 METER ILLUMINATION LIGHT
*10 1-HOLD SWITCH ILLUMINATION LIGHT
*11 FOG LAMP SWITCH ILLUMINATION LIGHT
*12 AT SELECT LEVER ILLUMINATION LIGH
*13 BLOWER SWITCH ILLUMINATION LIGHT
*14 DIFF. LOCK SWITCH ILLUMINATION LIG
*15 CLEARANCE LIGHT (RH)
*16 CLEARANCE LIGHT (LH)
*17 FRONT SIDE MARKER LIGHT (RH)
*18 FRONT SIDE MARKER LIGHT (LH)
*19 HEADLIGHT (RH)
*20 HEADLIGHT (LH)
*21 BEAM INDICATOR LIGHT
*22 ASH TRAY ILLUMINATION LIGHT

1800 engine model

COMPONENT	GRID LOCATION
A	
AIR CHARGE SOLENOID	B–2
AIR CONDITIONER CUT RELAY (AT)	B–2
AIR CONDITIONER MAX. UNIT	B–2
AIR CONDITIONER RELAY	B–2
AIR CONDITIONER SWITCH	B–2
AIR DISCHARGE SOLENOID	B–2
AIR FLOW METER	B–3
AM/FM RADIO	B–1
ASH TRAY ILLUMINATION LIGHT	A–3
AT CONTROL UNIT	B–3
AT CONTROL (TRANSMISSION)	B–3
AT SELECT LEVER ILLUMINATION LIGHT	A–3
AUTO ANTENNA	B–1
AUTO ANTENNA UNIT	B–1
AUTOMATIC SEAT BELT CONTROL UNIT	A–2
AUXILIARY AIR VALVE	B–4
B	
BACK-UP LIGHT (LH)	A–3
BACK-UP LIGHT (RH)	A–3
BACK-UP LIGHT SWITCH	A–3
BATTERY	A–1
BEAM INDICATOR LIGHT	A–3
BEAM & PASSING LIGHT SWITCH	A–3
BLOWER MOTOR	B–2
BLOWER RELAY	B–2
BLOWER MOTOR SWITCH	B–2
BLOWER SWITCH ILLUMINATION LIGHT	A–3
BRAKE FLUID LEVEL SENSOR	A–1
BRAKE FLUID LEVEL WARNING LIGHT	A–1
C	
CAR SPEED SENSOR	B–2
CAR SPEED SENSOR	A–4
CHARGE INDICATOR LIGHT	A–1
CHIME	A–2
CHIME SWITCH	A–2
CIGARETTE LIGHTER	A–4
CIRCUIT BRAKER	A–2
CLEARANCE LIGHT (LH)	A–3
CLEARANCE LIGHT (RH)	A–3
CLOCK	A–4
CLOCK ILLUMINATION LIGHT	A–3
COMPRESSOR	B–2
COMPRESSOR	B–3
COMPRESSOR RELAY	B–3
CRANK ANGLE SENSOR	A–1
D	
DIFF. LOCK SOLENOID	A–2
DIFF. LOCK SWITCH ILLUMINATION LIGHT	A–3
DIFF. LOCK SWITCH	A–2
DIFF. LOCK PILOT LAMP	A–2
DIFF. UNLOCK SOLENOID	A–2
DISTRIBUTOR	A–1
DOOR LOCK PILOT LAMP	B–1
DOOR LOCK SWITCH	B–1
DOOR SWITCH (LH)	A–2
DOOR SWITCH (RH)	A–2
E	
ECONOMY PRESSURE SWITCH	B–2
F	
FADE CONTROL	B–1
F/C ACTUATOR	B–2
FICD SOLENOID	B–3
FL SENSOR	B–2
4WD PILOT LAMP	A–2
4WD SOLENOID	A–2
4WD SELECTOR SWITCH	A–2
4WD SWITCH	A–2
FRONT DOOR ACTUATOR (RH)	B–1
FRONT DOOR MOTOR (LH)	A–2
FRONT DOOR MOTOR (RH)	A–2
FRONT DOOR SPEAKER (LH)	B–1
FRONT DOOR SPEAKER (RH)	B–1
FRONT DOOR SWITCH (LH)	A–2
FRONT DOOR SWITCH (RH)	A–2
FRONT DOOR WARNING LIGHT (LH)	A–2
FRONT DOOR WARNING LIGHT (RH)	A–2
FRONT LIMIT SWITCH (LH)	A–2
FRONT LIMIT SWITCH (RH)	A–2
FRONT SIDE MARKER LIGHT (LH)	A–3
FRONT SIDE MARKER LIGHT (RH)	A–3
FRONT SPEAKER (LH)	B–1
FRONT SPEAKER (RH)	B–1
FRONT VALVE (LH)	B–2
FRONT VALVE (RH)	B–2
FR SENSOR	B–2
FUEL GAUGE	A–1
FUEL GAUGE UNIT	A–1
FUEL INJECTOR	B–3
FUEL PUMP	B–4
FUEL PUMP RELAY	B–4
FUSE ① (15A)	B–2
FUSE ② (15A)	B–2
FUSE ③ (15A)	A–1
FUSE ④ (15A)	A–3
FUSE ⑤ (15A)	A–4
FUSE ⑥ (15A)	A–3
FUSE ⑦ (15A)	A–3
FUSE ⑧ (15A)	A–3
FUSE ⑨ (15A)	A–1
FUSE ⑩ (15A)	A–3
FUSE ⑪ (15A)	A–1
FUSE ⑫ (15A)	A–1
FUSE ⑬ (15A)	B–1
FUSE ⑭ (15A)	A–4
FUSE ⑮ (15A)	B–2
FUSE ⑯ (20A)	A–4
FUSE ⑰ (20A)	B–1
FUSE ⑱ (15A)	B–1
FUSE ⑲ (15A)	B–2
FUSE (OP) (15A)	B–2
FWD SOLENOID	A–2
FWD SWITCH	A–2
1-HOLD SWITCH	B–2
1-HOLD SWITCH ILLUMINATION LIGHT	A–3
G	
GLOVE BOX LIGHT	A–3
GLOVE BOX SWITCH	A–3
H	
HEADLIGHT (RH)	A–3
HEADLIGHT (LH)	A–3
HEIGHT CONTROL PILOT LAMP	B–2
HEIGHT CONTROL SWITCH	B–2
HIGH MOUNTED STOP LIGHT	A–2
HIGH/LOW PRESSURE SWITCH	B–2
HORN	A–4
HORN SWITCH	A–4
I	
IC ALTERNATOR	A–1
IGNITION COIL	A–1
IGNITION RELAY	B–3
IGNITION SWITCH	A–1
ILLUMINATION CONTROL	A–3
INHIBITOR SWITCH (AT)	A–1
INHIBITOR SWITCH	B–3
K	
KEY WARNING SWITCH	A–2
L	
LAP BELT SWITCH (LH)	A–2
LICENSE LIGHT (LH)	A–3
LICENSE LIGHT (RH)	A–3
LIGHTING RELAY (LH)	A–3
LIGHTING RELAY (RH)	A–3
LIGHTING SWITCH	A–3
LOCK SWITCH	A–3
LOW FUEL WARNING LIGHT	A–1
M	
METER ILLUMINATION LIGHT	A–3
MODE ACTUATOR	B–2
MODE CONTROL SWITCH	B–2
MODE CONTROL UNIT	B–2
MPFI CONTROL UNIT	A–1
MPFI CONTROL UNIT	B–3
MOTOR (LH)	A–2
MOTOR (RH)	A–2
N	
NEUTRAL SWITCH (MT)	B–3
NOISE CONDENSER	A–1
O	
O_2 SENSOR	B–4
OIL PRESSURE GAUGE	A–1
OIL PRESSURE SWITCH	A–1
OIL PRESSURE UNIT	A–1
OIL PRESSURE INDICATOR LIGHT	A–1
P	
PARKING BRAKE WARNING LIGHT	A–1
PARKING BRAKE SWITCH	A–1
PARKING LIGHT SWITCH	A–3
PILOT LAMP (2)	B–3
PILOT LAMP (3)	B–3
PILOT LAMP (D)	B–3
PILOT LAMP (N)	B–3
PILOT LAMP (P)	B–3
PILOT LAMP (R)	B–3
PILOT LAMP (1-HOLD)	B–3
PILOT LAMP (CHECK ENGINE)	B–3
PILOT LAMP (POWER)	B–3
PILOT LAMP (FWD)	B–2
PILOT LAMP (AT FLUID TEMPERATURE)	B–2
PNEUMATIC SUSPENSION CONTROL UNIT	B–2
POWER WINDOW RELAY	A–2
POWER WINDOW UNIT	A–2
PULSE COIL	B–2
PURGE CONTROL SOLENOID	B–4
PRESSURE SWITCH	B–2
R	
RADIATOR FAN MOTOR	B–2
RADIATOR FAN RELAY	B–2
RADIO ILLUMINATION LIGHT	A–3
REAR DEFOGGER	B–1
REAR DEFOGGER RELAY	B–1
REAR DEFOGGER PILOT LAMP	B–1
REAR DEFOGGER SWITCH	B–1
REAR LIMIT SWITCH (LH)	A–2
REAR LIMIT SWITCH (RH)	A–2
REAR SIDE MARKER LIGHT (LH)	A–3
REAR SIDE MARKER LIGHT (RH)	A–3
REAR SPEAKER (LH)	B–1
REAR SPEAKER (RH)	B–1
REAR SPEED SENSOR (4WD)	B–3
REAR VALVE (LH)	B–2
REAR VALVE (RH)	B–2
REMOTE CONTROLLED REAR VIEW MIRROR (LH)	A–4
REMOTE CONTROLLED REAR VIEW MIRROR (RH)	A–4
REMOTE CONTROLLED REAR VIEW MIRROR SWITCH	A–4
RESISTOR	B–2
RESISTOR	B–3
RL SENSOR	B–2
RETRACTABLE HEADLIGHT RELAY (LH)	A–3
RETRACTABLE HEADLIGHT RELAY (RH)	A–3
RETRACTOR INDICATOR LIGHT	A–3
RETRACTOR MOTOR (LH)	A–3
RETRACTOR MOTOR (RH)	A–3
RETRACTOR SWITCH	A–3
RETRACTOR TIMER	A–3
ROOM LIGHT	A–2
RR SENSOR	B–2
S	
SEAT BELT SWITCH	A–2
SEAT BELT WARNING LIGHT	A–2
SHOULDER BELT SWITCH (LH)	A–2
SHOULDER BELT SWITCH (RH)	A–2
SLIP AMPLIFIER	B–2
SPARK PLUG	A–1
SPEED SENSOR (FWD)	B–3
SPOT LIGHT (LH)	A–2
SPOT LIGHT (RH)	A–2
SPOT LIGHT SWITCH (LH)	A–2
SPOT LIGHT SWITCH (RH)	A–2
STARTER MOTOR	A–1
STEREO ILLUMINATION LIGHT	A–3
STOP LIGHT (LH)	A–1
STOP LIGHT (RH)	A–1
STOP LIGHT SWITCH	A–1
STOP LIGHT WARNING LIGHT	A–1
SUB-SWITCH	A–2
T	
TACHOMETER	A–1
TAIL LIGHT (LH)	A–3
TAIL LIGHT (RH)	A–3
TAIL LIGHT RELAY	A–3
TEMPERATURE GAUGE	A–1
TEMPERATURE GAUGE UNIT	A–1
THERMOSTAT	B–2
THERMO SWITCH	B–2
THROTTLE SENSOR	B–3
TRUNK ROOM LIGHT	A–4
TRUNK ROOM SWITCH	A–4
TURN SIGNAL & HAZARD SWITCH	A–3
TURN SIGNAL & HAZARD UNIT	A–3
TURN SIGNAL LIGHT (LH)	A–3
TURN SIGNAL LIGHT (RH)	A–3
TURN SIGNAL SWITCH	A–3
V	
VANITY MIRROR ILLUMINATION LIGHT	A–3
VOLTMETER	A–1
W	
WASHER MOTOR	A–4
WASHER SWITCH	A–4
WATER TEMPERATURE SWITCH (AT)	B–2
WATER TEMPERATURE SENSOR	B–3
WIPER INTERMITTENT UNIT	A–4
WIPER SELECTOR SWITCH	A–4
WIPER SWITCH	A–4
WIPER MOTOR	A–4

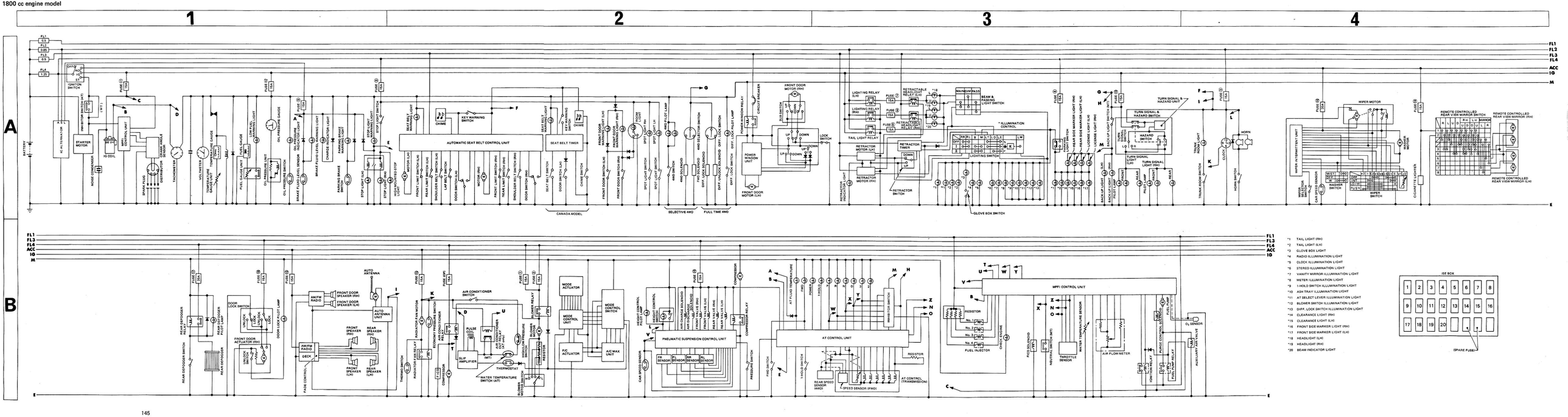

*1 TAIL LIGHT (RH)
*2 TAIL LIGHT (LH)
*3 GLOVE BOX LIGHT
*4 RADIO ILLUMINATION LIGHT
*5 CLOCK ILLUMINATION LIGHT
*6 STEREO ILLUMINATION LIGHT
*7 VANITY MIRROR ILLUMINATION LIGHT
*8 METER ILLUMINATION LIGHT
*9 1-HOLD SWITCH ILLUMINATION LIGHT
*10 ASH TRAY ILLUMINATION LIGHT
*11 AT SELECT LEVER ILLUMINATION LIGHT
*12 BLOWER SWITCH ILLUMINATION LIGHT
*13 DIFF. LOCK SWITCH ILLUMINATION LIGHT
*14 CLEARANCE LIGHT (RH)
*15 CLEARANCE LIGHT (LH)
*16 FRONT SIDE MARKER LIGHT (RH)
*17 FRONT SIDE MARKER LIGHT (LH)
*18 HEADLIGHT (LH)
*19 HEADLIGHT (RH)
*20 BEAM INDICATOR LIGHT

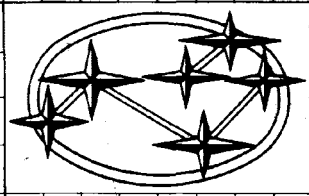

Publication No. G140BE ④
Issued: July 1987 A
Printed in Japan M-4.2