2014

Impreza WRX / STI



Owner's Manual

SUBARU

Confidence in Motion

Foreword

Congratulations on choosing a SUBARU vehicle. This Owner's Manual has all the information necessary to keep your SUBARU in excellent condition and to properly maintain the emission control system for minimizing emission pollutants. We urge you to read this manual carefully so that you may understand your vehicle and its operation. For information not found in this Owner's Manual, such as details concerning repairs or adjustments, please contact the SUBARU dealer from whom you purchased your SUBARU or the nearest SUBARU dealer.

The information, specifications and illustrations found in this manual are those in effect at the time of printing. FUJI HEAVY INDUSTRIES LTD. reserves the right to change specifications and designs at any time without prior notice and without incurring any obligation to make the same or similar changes on vehicles previously sold. This Owner's Manual applies to all models and covers all equipment, including factory installed options. Some explanations, therefore may be for equipment not installed in your vehicle.

Please leave this manual in the vehicle at the time of resale. The next owner will need the information found herein.

FUJI HEAVY INDUSTRIES LTD., TOKYO, JAPAN

SUBARU is a registered trademark of FUJI HEAVY INDUSTRIES LTD.

© Copyright 2013 FUJI HEAVY INDUSTRIES LTD.

This manual describes the following vehicle types.

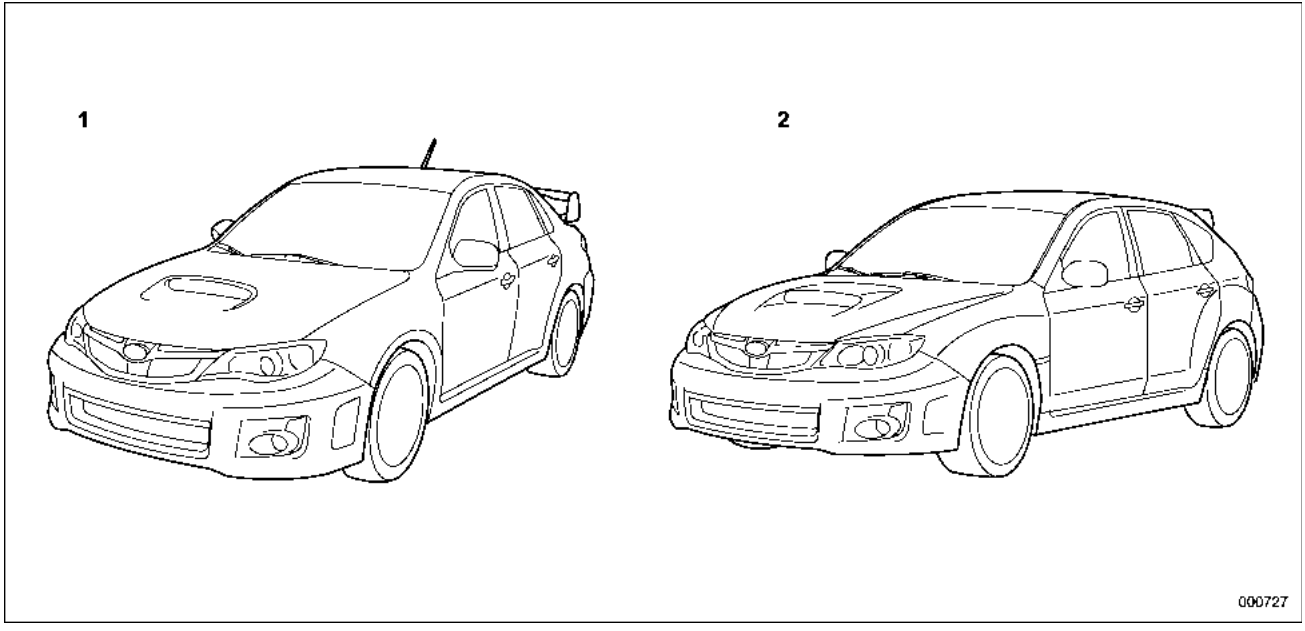

1) 4-door models
2) 5-door models

Warranties

■ Warranties for U.S.A.

All SUBARU vehicles distributed by Subaru of America, Inc. and sold at retail by an authorized SUBARU dealer in the United States come with the following warranties:

- SUBARU Limited Warranty
- Emission Control Systems Warranty
- Emissions Performance Warranty

All warranty information, including details of coverage and exclusions, is in the "Warranty and Maintenance Booklet". Please read these warranties carefully.

■ Warranties for Canada

All SUBARU vehicles distributed by Subaru Canada, Inc. and sold at retail by an authorized SUBARU dealer in Canada come with the following warranties:

- SUBARU Limited Warranty
- Anti-Corrosion Warranty
- Emission Control Warranty

All warranty information, including details of coverage and exclusions, is in the "Warranty and Service Booklet". Please read these warranties carefully.

■ Models with HID headlights

⚠ CAUTION

High Intensity Discharge (HID) headlights contain mercury. For that reason, it is necessary to remove HID headlights before vehicle disposal. Once removed, please reuse, recycle or dispose of the HID headlights as hazardous waste.

■ Models without HID headlights

NOTE

This vehicle does not contain mercury devices or parts.

How to use this Owner's Manual

■ Using your Owner's Manual

Before you operate your vehicle, carefully read this manual. To protect yourself and extend the service life of your vehicle, follow the instructions in this manual. Failure to observe these instructions may result in serious injury and damage to your vehicle.

This manual is composed of fourteen chapters. Each chapter begins with a brief table of contents, so you can usually tell at a glance if that chapter contains the information you want.

Chapter 1: Seat, seatbelt and SRS airbags

This chapter informs you how to use the seat and seatbelt and contains precautions for the SRS airbags.

Chapter 2: Keys and doors

This chapter informs you how to operate the keys, locks and windows.

Chapter 3: Instruments and controls

This chapter informs you about the operation of instrument panel indicators and how to use the instruments and other switches.

– CONTINUED –

Chapter 4: Climate control
This chapter informs you how to operate the climate control.

Chapter 5: Audio
This chapter informs you how to operate your audio system.

Chapter 6: Interior equipment
This chapter informs you how to operate interior equipment.

Chapter 7: Starting and operating
This chapter informs you how to start and operate your SUBARU.

Chapter 8: Driving tips
This chapter informs you how to drive your SUBARU in various conditions and explains some safety tips on driving.

Chapter 9: In case of emergency
This chapter informs you what to do if you have a problem while driving, such as a flat tire or engine overheating.

Chapter 10: Appearance care
This chapter informs you how to keep your SUBARU looking good.

Chapter 11: Maintenance and service
This chapter informs you when you need to take your SUBARU to the dealer for scheduled maintenance and informs you how to keep your SUBARU running properly.

Chapter 12: Specifications
This chapter informs you about dimensions and capacities of your SUBARU.

Chapter 13: Consumer information and Reporting safety defects
This chapter informs you about Uniform tire quality grading standards and Reporting safety defects.

Chapter 14: Index
This is an alphabetical listing of all that's in this manual. You can use it to quickly find something you want to read.

■ Safety warnings

You will find a number of WARNINGs, CAUTIONs and NOTEs in this manual.

These safety warnings alert you to potential hazards that could result in injury to you or others.

Please read these safety warnings as well as all other portions of this manual carefully in order to gain a better understanding of how to use your SUBARU vehicle safely.

⚠ WARNING

A WARNING indicates a situation in which serious injury or death could result if the warning is ignored.

⚠ CAUTION

A CAUTION indicates a situation in which injury or damage to your vehicle, or both, could result if the caution is ignored.

NOTE

A NOTE gives information or suggestions how to make better use of your vehicle.

■ Safety symbol

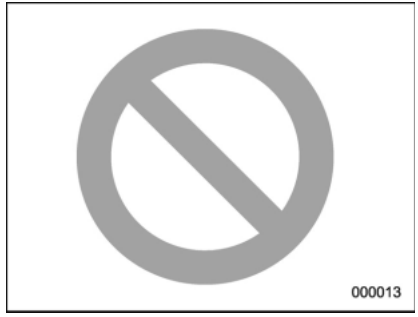

You will find a circle with a slash through it in this manual. This symbol means "Do not", "Do not do this", or "Do not let this happen", depending upon the context.

■ Abbreviation list

You may find several abbreviations in this manual. The meanings of the abbreviations are shown in the following list.

Abbreviation	Meaning
A/C	Air conditioner
A/ELR	Automatic/Emergency locking retractor
ABS	Anti-lock brake system
AKI	Anti knock index
ALR	Automatic locking retractor
AWD	All-wheel drive
DCCD	Driver's control center differential
DRL	Daytime running light
EBD	Electronic brake force distribution
ELR	Emergency locking retractor
FWD	Front-wheel drive
GAW	Gross axle weight
GAWR	Gross axle weight rating
GVW	Gross vehicle weight
GVWR	Gross vehicle weight rating
HID	High intensity discharge
INT	Intermittent
LATCH	Lower anchors and tethers for children
LED	Light emitting diode
LSD	Limited slip differential
MIL	Malfunction indicator light
MMT	Methylcyclopentadienyl manganese tricarbonyl
MT	Manual transmission
OBD	On-board diagnostics
RON	Research octane number
SI-DRIVE	SUBARU Intelligent Drive
SRS	Supplemental restraint system
TIN	Tire identification number
TPMS	Tire pressure monitoring system

Vehicle symbols

There are some of the symbols you may see on your vehicle.

For warning and indicator lights, refer to "Warning and indicator lights" ☞22.

Mark	Name
	WARNING
	CAUTION
	Power door lock
	Power door unlock
	Power window with automatic open and close function
	Passengers' windows lock and unlock
	Fuel
	Front fog lights

– CONTINUED –

Mark	Name
	Hazard warning flasher
	Engine hood
	Trunk lid (4-door)
	Seat heater
	Child restraint top tether anchorages
	Child restraint lower anchorages
	Horn
	Wiper intermittent
	Windshield washer
	Windshield wiper mist (for single wipe)
	Rear window wiper

Mark	Name
	Rear window washer
	Lights
	Tail lights, license plate light and instrument panel illumination
	Headlights
	Turn signal
	Illumination brightness
	Fan speed
	Instrument panel outlets
	Instrument panel outlets and foot outlets
	Foot outlets
	Windshield defroster and foot outlets

Mark	Name
	Windshield defroster
	Rear window defogger/Outside mirror defogger/Windshield wiper deicer
	Air recirculation
	Engine oil
	Washer
	Door lock (transmitter)
	Door unlock (transmitter)
	Trunk lid open (4-door) or rear gate unlock (5-door) (transmitter)

Safety precautions when driving

■ Seatbelt and SRS airbag

⚠ WARNING

- **All persons in the vehicle should fasten their seatbelts BEFORE the vehicle starts to move. Otherwise, the possibility of serious injury becomes greater in the event of a sudden stop or accident.**
- **To obtain maximum protection in the event of an accident, the driver and all passengers in the vehicle should always wear seatbelts when the vehicle is moving. The SRS (Supplemental Restraint System) airbag does not do away with the need to fasten seatbelts. In combination with the seatbelts, it offers the best combined protection in case of a serious accident.**

  Not wearing a seatbelt increases the chance of severe injury or death in a crash even when the vehicle has the SRS airbag.
- **The SRS airbags deploy with considerable speed and force. Occupants who are out of proper position when the SRS airbag deploys could suffer very serious injuries. Because the SRS airbag needs enough space for deployment, the driver should always sit upright and well back in the seat as far from the steering wheel as practical while still maintaining full vehicle control and the front passenger should move the seat as far back as possible and sit upright and well back in the seat.**

For instructions and precautions, carefully read the following sections.

- For the seatbelt system, refer to “Seatbelts” ☞1-11.
- For the SRS airbag system, refer to “*SRS airbag (Supplemental Restraint System airbag)” ☞1-34.

■ Child safety

⚠ WARNING

- **Never hold a child on your lap or in your arms while the vehicle is moving. The passenger cannot protect the child from injury in a collision, because the child will be caught between the passenger and objects inside the vehicle.**
- **While riding in the vehicle, infants and small children should always be placed in the REAR seat in an infant or child restraint system which is appropriate for the child’s age, height and weight. If a child is too big for a child restraint system, the child should sit in the REAR seat and be restrained using the seatbelts. According to accident statistics, children are safer when properly restrained in the rear seating positions than in the front seating positions. Never allow a child to stand up or kneel on the seat.**
- **Put children aged 12 and under in the REAR seat properly restrained at all times in a child restraint device or in a seatbelt.**

– CONTINUED –

The SRS airbag deploys with considerable speed and force and can injure or even kill children, especially if they are 12 years of age and under and are not restrained or improperly restrained. Because children are lighter and weaker than adults, their risk of being injured from deployment is greater.

- **NEVER INSTALL A REARWARD FACING CHILD SEAT IN THE FRONT SEAT. DOING SO RISKS SERIOUS INJURY OR DEATH TO THE CHILD BY PLACING THE CHILD'S HEAD TOO CLOSE TO THE SRS AIRBAG.**
- **Always turn the child safety locks to the "LOCK" position when children sit in the rear seat. Serious injury could result if a child accidentally opens the door and falls out. Refer to "Child safety locks" ☞2-20.**
- **Always lock the passenger's windows using the lock switch when children are riding in the vehicle. Failure to follow this procedure could result in injury to a child operating the power window. Refer to "Windows" ☞2-20.**

- **Never leave unattended children, adults or animals in the vehicle. They could accidentally injure themselves or others through inadvertent operation of the vehicle. Also, on hot or sunny days, temperature in a closed vehicle could quickly become high enough to cause severe or possibly fatal injuries to them.**
- **Help prevent children, adults or animals from locking themselves in the trunk. On hot or sunny days, the temperature in the trunk could quickly become high enough to cause death or serious heat-related injuries including brain damage to anyone locked inside, particularly for small children.**
- **When leaving the vehicle, either close all windows and lock all doors. Also make certain that the trunk is closed.**

For instructions and precautions, carefully read the following sections.

- For the seatbelt system, refer to "Seatbelts" ☞1-11.
- For the child restraint system, refer to "Child restraint systems" ☞1-21.
- For the SRS airbag system, refer to "*SRS airbag (Supplemental Restraint System airbag)" ☞1-34.

■ Engine exhaust gas (carbon monoxide)

⚠ WARNING

- **Never inhale engine exhaust gas. Engine exhaust gas contains carbon monoxide, a colorless and odorless gas which is dangerous, or even lethal, if inhaled.**
- **Always properly maintain the engine exhaust system to prevent engine exhaust gas from entering the vehicle.**
- **Never run the engine in a closed space, such as a garage, except for the brief time needed to drive the vehicle in or out of it.**
- **Avoid remaining in a parked vehicle for a lengthy time while the engine is running. If that is unavoidable, then use the ventilation fan to force fresh air into the vehicle.**
- **Always keep the front ventilator inlet grille free from snow, leaves or other obstructions to ensure**

that the ventilation system always works properly.

- **If at any time you suspect that exhaust fumes are entering the vehicle, have the problem checked and corrected as soon as possible. If you must drive under these conditions, drive only with all windows fully open.**
- **Keep the trunk lid or rear gate closed while driving to prevent exhaust gas from entering the vehicle.**

■ Drinking and driving

⚠ WARNING

Drinking and then driving is very dangerous. Alcohol in the bloodstream delays your reaction time and impairs your perception, judgment and attentiveness. If you drive after drinking – even if you drink just a little – it will increase the risk of being involved in a serious or fatal accident, injuring or killing yourself, your passengers and others. In addition, if you are injured in the accident, alcohol may increase the severity of that injury.

Please don't drink and drive.

Drunken driving is one of the most frequent causes of accidents. Since alcohol affects all people differently, you may have consumed too much alcohol to drive safely even if the level of alcohol in your blood is below the legal limit. The safest thing you can do is never drink and drive. However if you have no choice but to drive, stop drinking and sober up completely before getting behind the wheel.

■ Drugs and driving

⚠ WARNING

There are some drugs (over the counter and prescription) that can delay your reaction time and impair your perception, judgment and attentiveness. If you drive after taking them, it may increase your, your passengers' and other persons' risk of being involved in a serious or fatal accident.

If you are taking any drugs, check with your doctor or pharmacist or read the literature that accompanies the medication to determine if the drug you are taking can impair your driving ability. Do not drive after taking any medications that can make you drowsy or otherwise affect your ability to safely operate a motor vehicle. If you have a medical condition that requires you to take drugs, please consult with your doctor.

Never drive if you are under the influence of any illicit mind-altering drugs. For your own health and well-being, we urge you not to take illegal drugs in the first place and to seek treatment if you are addicted to those drugs.

– CONTINUED –

■ Driving when tired or sleepy

⚠ WARNING

When you are tired or sleepy, your reaction time will be delayed and your perception, judgment and attentiveness will be impaired. If you drive when tired or sleepy, your, your passengers' and other persons' chances of being involved in a serious accident may increase.

Please do not continue to drive but instead find a safe place to rest if you are tired or sleepy. On long trips, you should make periodic rest stops to refresh yourself before continuing on your journey. When possible, you should share the driving with others.

■ Modification of your vehicle

⚠ CAUTION

Your vehicle should not be modified other than with genuine SUBARU parts and accessories. Other types of modifications could affect its performance, safety or durability, and may even violate governmental regulations. In addition, damage or performance problems resulting from modification may not be covered under warranties.

■ Car phone/cell phone and driving

⚠ CAUTION

Do not use a car phone/cell phone while driving; it may distract your attention from driving and can lead to an accident. If you use a car phone/cell phone, pull off the road and park in a safe place before using your phone. In some States/ Provinces, only hands-free phones may legally be used while driving.

■ Driving vehicles equipped with navigation system

⚠ WARNING

Do not allow the monitor to distract your attention from driving. Also, do not operate the controls of the navigation system while driving. The loss of attention to driving could lead to an accident. If you wish to operate the controls of the navigation system, first take the vehicle off the road and stop it in a safe place.

■ Driving with pets

Unrestrained pets can interfere with your driving and distract your attention from driving. In a collision or sudden stop, unrestrained pets or cages can be thrown around inside the vehicle and hurt you or your passengers. Besides, the pets can be hurt under these situations. It is also for their own safety that pets should be properly restrained in your vehicle. Restrain a pet with a special traveling harness which can be secured to the rear seat with a seatbelt or use a pet carrier which can be secured to the rear seat by routing a seatbelt through the carrier's handle. Never restrain pets or pet carriers in the front passenger's seat. For further information, consult your veterinarian, local animal protection society or pet shop.

■ Tire pressures

Check and, if necessary, adjust the pressure of each tire (including the spare) at least once a month and before any long journey.

Check the tire pressure when the tires are cold. Use a pressure gauge to adjust the tire pressures to the values shown on the tire placard. For detailed information, refer to “Tires and wheels” ☞11-24.

⚠ WARNING

Driving at high speeds with excessively low tire pressures can cause the tires to deform severely and to rapidly become hot. A sharp increase in temperature could cause tread separation, and destruction of the tires. The resulting loss of vehicle control could lead to an accident.

General information

■ California proposition 65 warning

⚠ WARNING

Engine exhaust, some of its constituents, and certain vehicle components contain or emit chemicals known to the State of California to cause cancer and birth defects or other reproductive harm. In addition, certain fluids in vehicles and certain components of product wear contain or emit chemicals known to the State of California to cause cancer and birth defects or other reproductive harm.

■ California Perchlorate Advisory

Certain vehicle components such as airbag modules, seatbelt pretensioners and keyless entry transmitter batteries may contain perchlorate material. Special handling may apply for service or vehicle end of life disposal. See www.dtsc.ca.gov/hazardouswaste/perchlorate.

■ Noise from under the vehicle

NOTE

You may hear a noise from under the vehicle approximately 5 to 10 hours after the engine is turned off. However, this does not indicate a malfunction. This noise is caused by operation of the fuel evaporation leakage checking system and is normal. The noise will stop after approximately 15 minutes.

Table of contents

Seat, seatbelt and SRS airbags	*1*
Keys and doors	*2*
Instruments and controls	*3*
Climate control	*4*
Audio	*5*
Interior equipment	*6*
Starting and operating	*7*
Driving tips	*8*
In case of emergency	*9*
Appearance care	*10*
Maintenance and service	*11*
Specifications	*12*
Consumer information and Reporting safety defects	*13*
Index	*14*

Illustrated index

■ Exterior

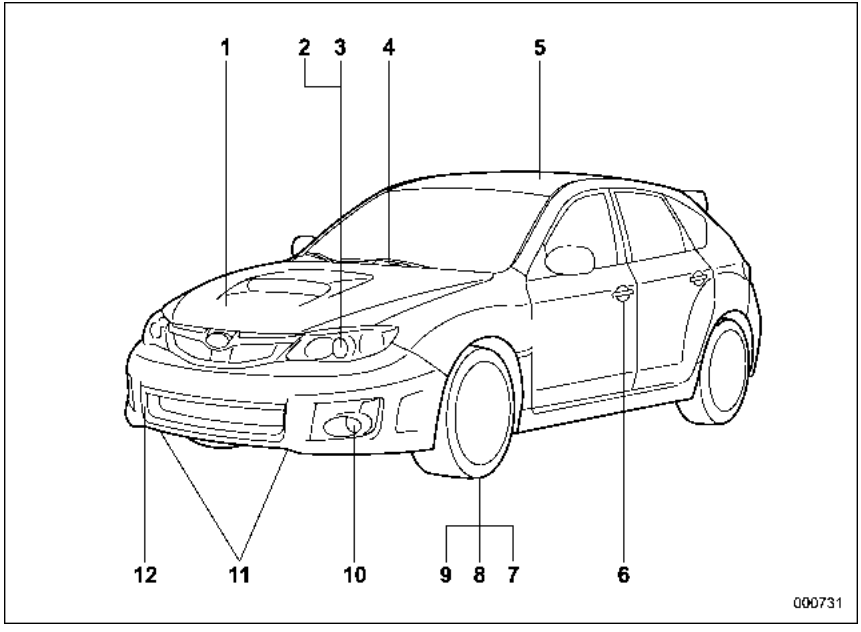

1) Engine hood (page 11-5)
2) Headlight switch (page 3-29)
3) Replacing bulbs (page 11-39)
4) Wiper switch (page 3-36)
5) Moonroof (page 2-27)
6) Door locks (page 2-4)
7) Tire pressure (page 11-26)
8) Flat tires (page 9-5)
9) Snow tires (page 8-8)
10) Front fog light switch (page 3-34)
11) Tie-down hooks (page 9-13)
12) Towing hook (page 9-13)

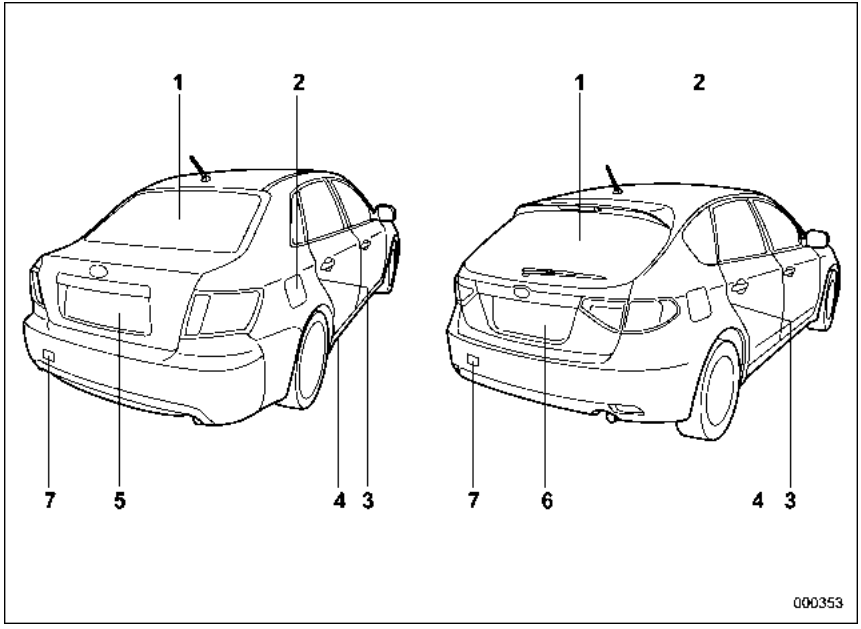

1) Rear window defogger (page 3-47)
2) Fuel filler lid and cap (page 7-4)
3) Child safety locks (page 2-20)
4) Tie-down hook (page 9-13)
5) Trunk lid (page 2-23)
6) Rear gate (page 2-26)
7) Towing hook (page 9-13)

– CONTINUED –

■ Interior

▼ Passenger compartment area

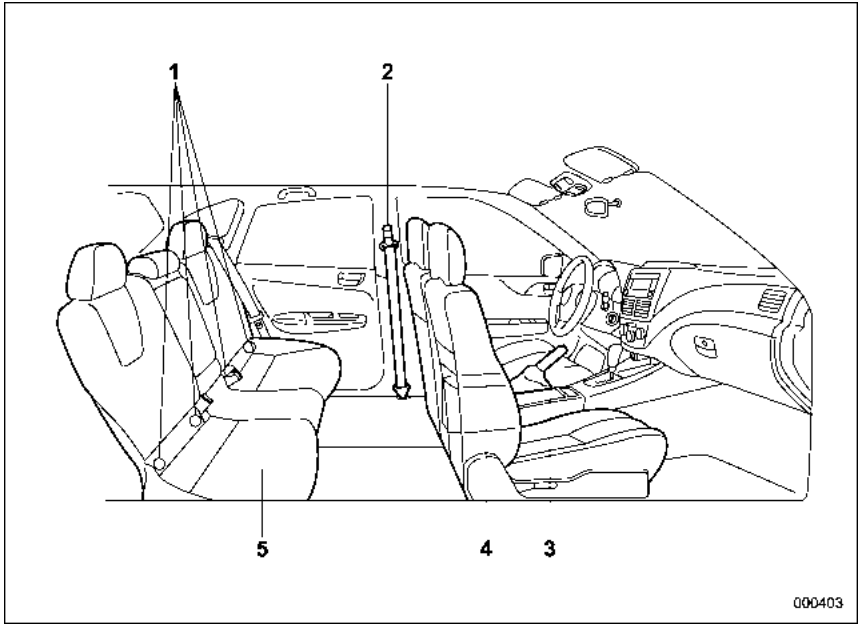

1) Lower anchorages for child restraint system (page 1-29)
2) Seatbelt (page 1-11)
3) Parking brake lever (page 7-33)
4) Front seat (page 1-2)
5) Rear seat (page 1-7)

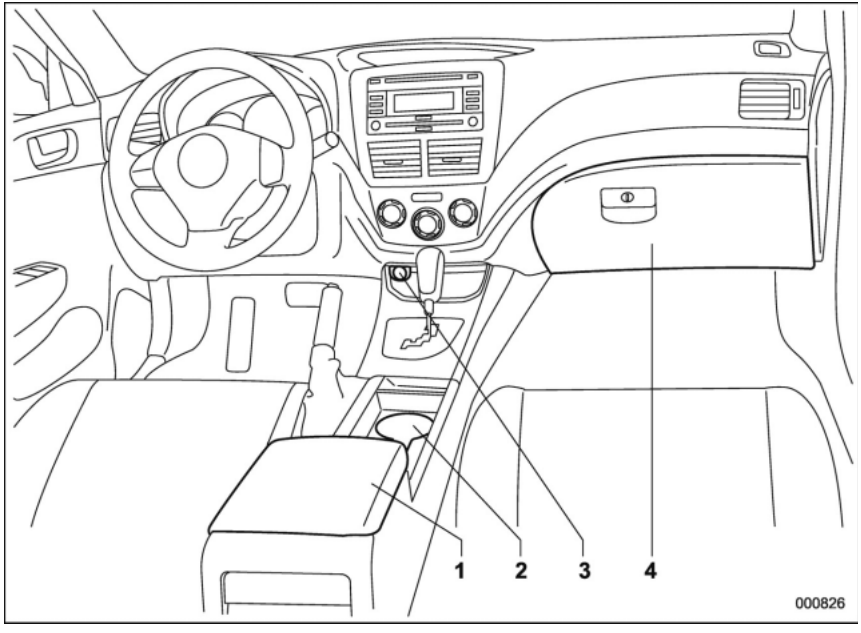

1) Center console (page 6-5)
2) Cup holder (page 6-5)
3) Front power supply socket (page 6-8)
4) Glove box (page 6-5)

– CONTINUED –

■ Instrument panel

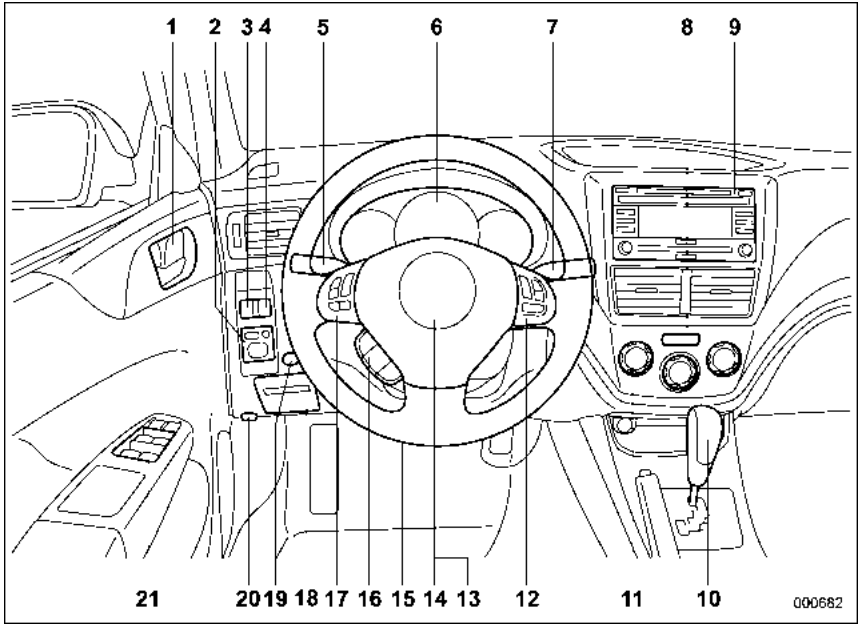

1) Door locks (page 2-4)
2) Outside mirror switch (page 3-45)
3) Illumination brightness control (page 3-31)
4) Headlight beam leveler (page 3-32)
5) Light control switch (page 3-29)
6) Combination meter (page 3-5)
7) Wiper control lever (page 3-34)
8) Hazard warning flasher switch (page 3-5)
9) Audio (page 5-1)
10) Shift lever (page 7-14/page 7-16)
11) Climate control (page 4-1)
12) Cruise control (page 7-37)
13) Horn (page 3-49)
14) SRS airbag (page 1-34)
15) Tilt/telescopic steering (page 3-48)
16) Hands-free switches (page 5-35)
17) Audio control buttons (page 5-31)
18) Fuse box (page 11-38)
19) Vehicle Dynamics Control OFF switch (page 7-31)/Vehicle Dynamics Control OFF switch (STI) (page 7-30)
20) Hood lock release knob (page 11-5)
21) Power windows (page 2-20)

■ Light control and wiper control levers/switches

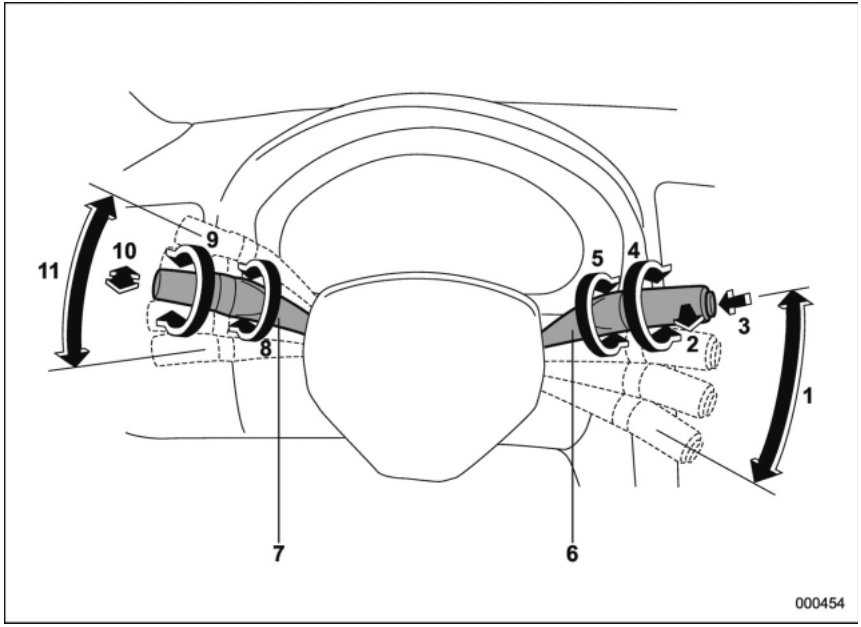

1) Windshield wiper (page 3-36)
2) Mist (page 3-36)
3) Windshield washer (page 3-37)
4) Rear window wiper and washer switch (page 3-37)
5) Wiper intermittent time control switch (page 3-36)
6) Wiper control lever (page 3-34)
7) Light control switch (page 3-29)
8) Fog light switch (page 3-34)
9) Headlight ON/OFF (page 3-29)
10) Headlight flasher High/Low beam change (page 3-30)
11) Turn signal (page 3-31)

– CONTINUED –

■ Combination meter

▼ U.S.-spec. models (STI)

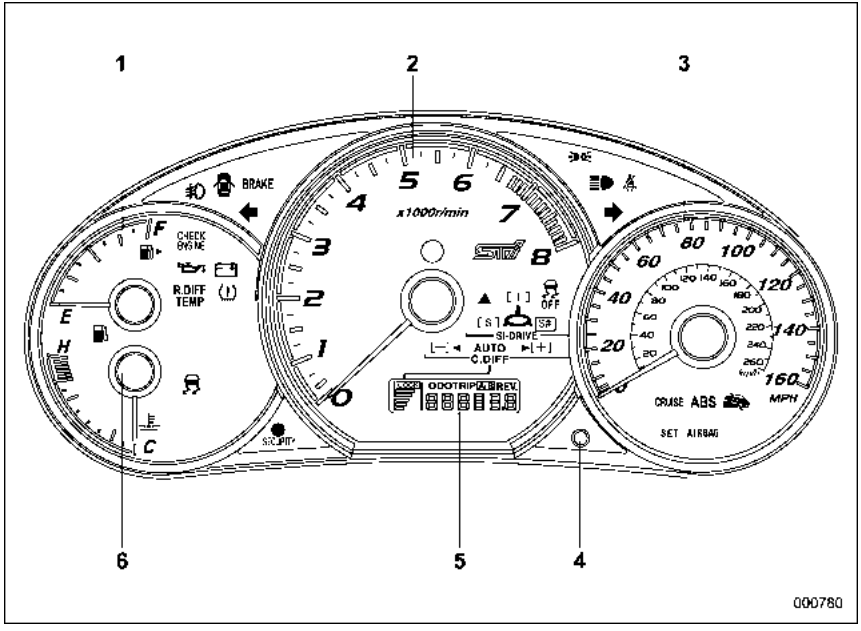

1) Fuel gauge (page 3-9)
2) Tachometer (page 3-9)
3) Speedometer (page 3-7)
4) Trip meter A/B selection and trip meter reset knob (page 3-7)
5) Odometer/Trip meter (page 3-7)
6) Temperature gauge (page 3-10)

▼ **U.S.-spec. models (except STI)**

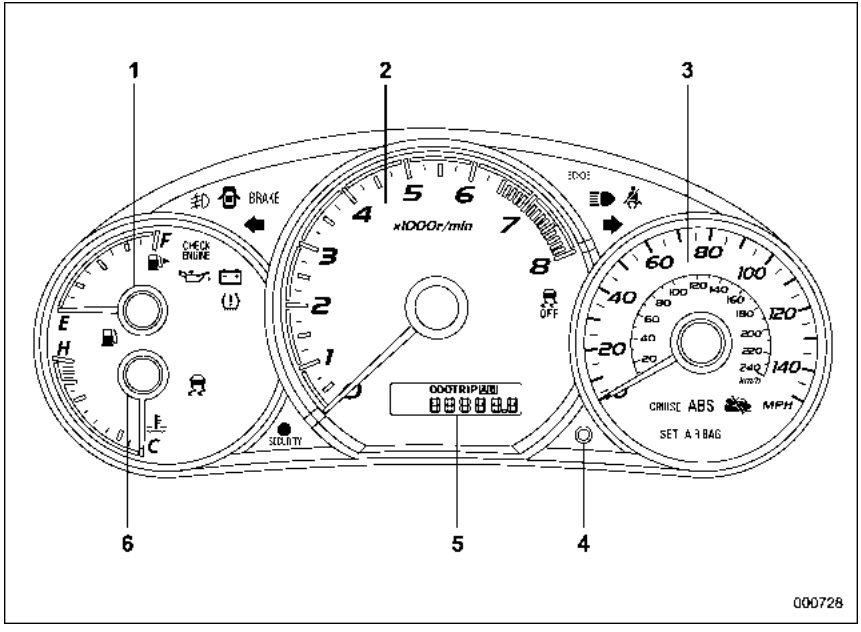

1) Fuel gauge (page 3-9)
2) Tachometer (page 3-9)
3) Speedometer (page 3-7)
4) Trip meter A/B selection and trip meter reset knob (page 3-7)
5) Odometer/Trip meter (page 3-7)
6) Temperature gauge (page 3-10)

– CONTINUED –

▼ **Except U.S.-spec. models (STI)**

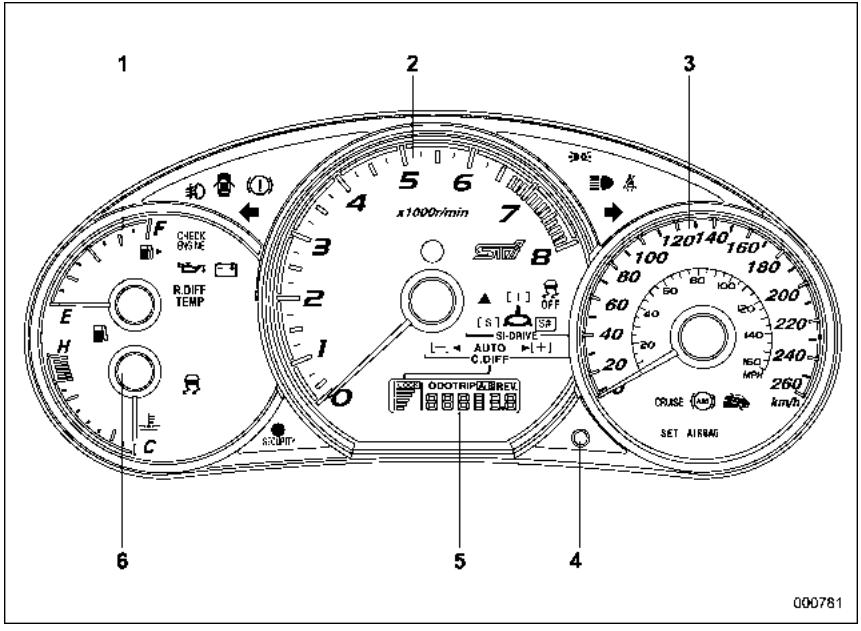

1) Fuel gauge (page 3-9)
2) Tachometer (page 3-9)
3) Speedometer (page 3-7)
4) Trip meter A/B selection and trip meter reset knob (page 3-7)
5) Odometer/Trip meter (page 3-7)
6) Temperature gauge (page 3-10)

▼ **Except U.S.-spec. models (except STI)**

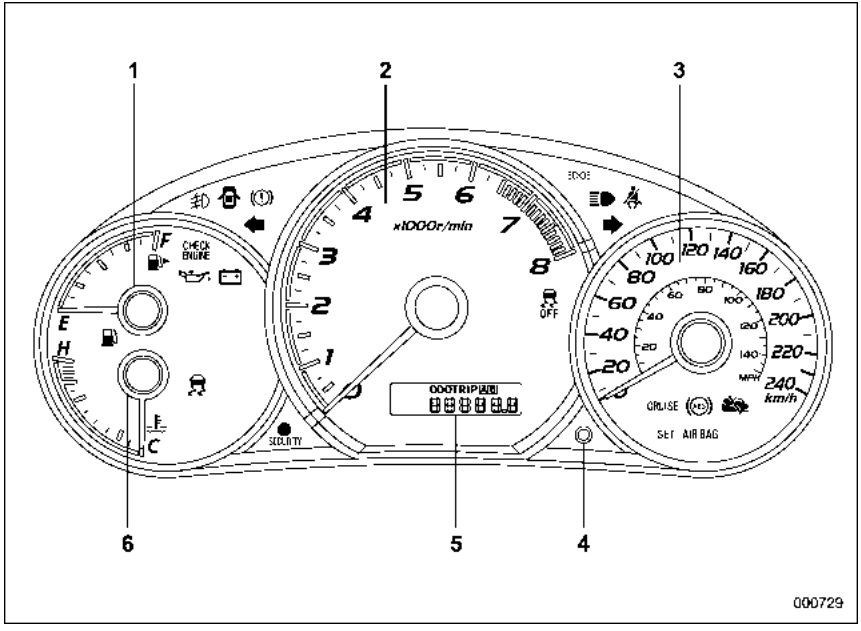

1) Fuel gauge (page 3-9)
2) Tachometer (page 3-9)
3) Speedometer (page 3-7)
4) Trip meter A/B selection and trip meter reset knob (page 3-7)
5) Odometer/Trip meter (page 3-7)
6) Temperature gauge (page 3-10)

– CONTINUED –

■ Warning and indicator lights

Mark	Name	Page
	Seatbelt warning light	3-13
	Front passenger's seatbelt warning light	3-13
AIR BAG	SRS airbag system warning light	3-14
ON /	Front passenger's frontal airbag ON indicator	3-14
OFF /	Front passenger's frontal airbag OFF indicator	3-14
CHECK ENGINE	CHECK ENGINE warning light/Malfunction indicator light	3-15
	Charge warning light	3-16
	Oil pressure warning light	3-16
R.DIFF TEMP	Rear differential oil temperature warning light (STI)	3-16
ABS / 	ABS warning light	3-18

Mark	Name	Page
BRAKE / 	Brake system warning light	3-19
	Door open warning light	3-20
	Hill start assist warning light/Hill start assist OFF indicator light (STI)	3-20
	Vehicle Dynamics Control warning light/ Vehicle Dynamics Control operation indicator light	3-20
	Vehicle Dynamics Control OFF indicator light/Traction Control OFF indicator light (STI)	3-21
	Turn signal indicator lights	3-24
	High beam indicator light	3-24
	Front fog light indicator light (if equipped)	3-24
	Security indicator light	3-23
	Headlight indicator light	3-24

Mark	Name	Page
CRUISE	Cruise control indicator light	3-24
SET	Cruise control set indicator light	3-24
	Low fuel warning light	3-20
	Low tire pressure warning light (U.S.-spec. models)	3-16
	Shift-up indicator light (STI)	3-23
AUTO	Driver's control center differential auto indicator light (STI)	3-24
AUTO▶[+]	Auto [+] mode indicator light (STI)	3-24
[–]◀AUTO	Auto [–] mode indicator light (STI)	3-25
	Driver's control center differential indicator and warning lights (STI)	3-25
	REV indicator light (STI)	3-25
[S]	Sport (S) mode indicator light (STI)	3-23

Mark	Name	Page
[I]	Intelligent (I) mode indicator light (STI)	3-23
S#	Sport Sharp (S#) mode indicator light (STI)	3-23

Function settings

A SUBARU dealer can change the settings of the functions shown in the following table to meet your personal requirements. Contact the nearest SUBARU dealer for details.

Item	Function	Possible settings	Default setting	Page
Alarm system	Alarm system	Operation/Non-operation	Operation	2-15
	Monitoring start delay time (after closure of doors)	0 second/30 seconds	30 seconds	2-16
	Impact sensor operation (only models with shock sensors (dealer option))	Operation/Non-operation	Non-operation	2-19
	Passive arming	Operation/Non-operation	Non-operation	2-18
	Dome light and map lights illumination (models with moonroof)	ON/OFF	OFF	2-15
	Dome light illumination (models without moonroof)			
Remote keyless entry system	Hazard warning flasher	Operation/Non-operation	Operation	2-7
	Audible signal	Operation/Non-operation	Operation	2-10
Key lock-in prevention	Key lock-in prevention	Operation/Non-operation	Operation	2-7
Remote engine start system (dealer option)	Horn chirp confirmation	ON/OFF	ON	7-12
Defogger and deicer system for models with the automatic climate control system	Rear window defogger, outside mirror defogger and windshield wiper deicer	Operation for 15 minutes/ Continuous operation	Operation for 15 minutes	3-47
Dome light	Operation of dome light/map light OFF delay timer	OFF/Short/Normal/Long	Long	6-2, 6-3
Map light for models with a moonroof				
Battery drainage prevention function	Battery drainage prevention function	Operation/Non-operation	Operation	2-5
Seatbelt warning	Sounds a chime while driving	Operation/Non-operation	Operation	3-13

Front seats 1-2
- Forward and backward adjustment 1-3
- Reclining the seatback 1-3
- Seat cushion height adjustment (driver's seat) 1-4
- Head restraint adjustment (if equipped) 1-4
- Active head restraint (if equipped) 1-5

Seat heater (if equipped) 1-6
- Type A seat heater 1-6
- Type B seat heater 1-6

Rear seats 1-7
- Armrest (if equipped) 1-8
- Head restraint adjustment 1-8
- Folding down the rear seatback 1-9

Seatbelts 1-11
- Seatbelt safety tips 1-11
- Emergency Locking Retractor (ELR) 1-12
- Automatic/Emergency Locking Retractor (A/ELR) 1-12
- Seatbelt warning light and chime 1-12
- Fastening the seatbelt 1-12
- Seatbelt maintenance 1-19

Front seatbelt pretensioners 1-19
- System monitors 1-20
- System servicing 1-20
- Precautions against vehicle modification 1-21

Child restraint systems 1-21
- Where to place a child restraint system 1-22
- Choosing a child restraint system 1-24
- Installing child restraint systems with A/ELR seatbelt 1-24
- Installing a booster seat 1-27
- Installation of child restraint systems by use of lower and tether anchorages (LATCH) 1-29
- Top tether anchorages 1-31

***SRS airbag (Supplemental Restraint System airbag)** 1-34
- General precautions regarding SRS airbag system 1-34
- Components 1-41
- SUBARU advanced frontal airbag system, SRS side airbag and SRS curtain airbag 1-43
- System operation 1-47
- SRS airbag system monitors 1-55
- SRS airbag system servicing 1-56
- Precautions against vehicle modification 1-57

Front seats

⚠ WARNING

- **Never adjust the seat while driving to avoid loss of vehicle control and personal injury.**
- **Before adjusting the seat, make sure the hands and feet of rear seat passengers and cargo are clear of the adjusting mechanism.**
- **After adjusting the seat, push it slightly to make sure it is securely locked. If the seat is not securely locked, it may move or the seatbelt may not operate properly.**
- **Do not put objects under the front seats. They may interfere with front seat locking and cause an accident.**
- **Seatbelts provide maximum restraint when the occupant sits well back and upright in the seat. To reduce the risk of sliding under the seatbelt in a collision, the front seatbacks should be always used in the upright position while the vehicle is running. If the front seatbacks are not used in the upright position in a collision, the risk of sliding under the lap belt and of the lap belt sliding up over the abdomen will increase, and both can result in serious internal injury or death.**
- **The SRS airbags deploy with considerable speed and force. Occupants who are out of proper position when the SRS airbag deploys could suffer very serious injuries. Because the SRS airbag needs enough space for deployment, the driver should always sit upright and well back in the seat as far from the steering wheel as practical while still maintaining full vehicle control and the front passenger should move the seat as far back as possible and sit upright and well back in the seat.**



⚠ WARNING

Put children aged 12 and under in the rear seat properly restrained at all times. The SRS airbag deploys with considerable speed and force and can injure or even kill children, especially if they are 12 years of age and under and are not restrained or improperly restrained. Because children are lighter and weaker than adults, their risk of being injured from deployment is greater. For that reason, we strongly recommend that ALL children (including those in child seats and those that have outgrown child restraint devices) sit in the REAR seat properly restrained at all times in a child

restraint device or in a seatbelt, whichever is appropriate for the child's age, height and weight. Secure ALL types of child restraint devices (including forward facing child seat) in the REAR seats at all times.

NEVER INSTALL A REARWARD FACING CHILD SEAT IN THE FRONT SEAT. DOING SO RISKS SERIOUS INJURY OR DEATH TO THE CHILD BY PLACING THE CHILD'S HEAD TOO CLOSE TO THE SRS AIRBAG.

According to accident statistics, children are safer when properly restrained in the rear seating positions than in the front seating positions. For instructions and precautions concerning child restraint systems, refer to "Child restraint systems" ☞1-21.

■ Forward and backward adjustment

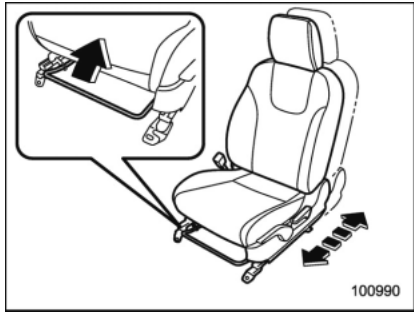

Pull the lever upward and slide the seat to the desired position. Then release the lever and try to move the seat back and forth to make sure that it is securely locked into place.

■ Reclining the seatback

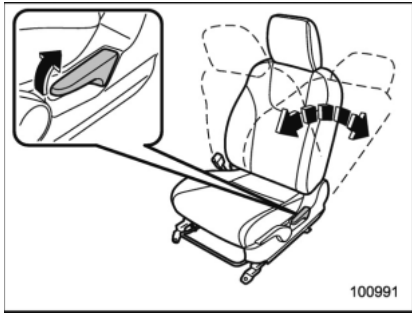

Pull the reclining lever up and adjust the seatback to the desired position. Then release the lever and make sure the seatback is securely locked into place.

The seatback placed in a reclined position can spring back upward with force when the lever is pulled. While operating the lever to return the seatback, hold the seatback lightly so that it may be raised back gradually.

– CONTINUED –

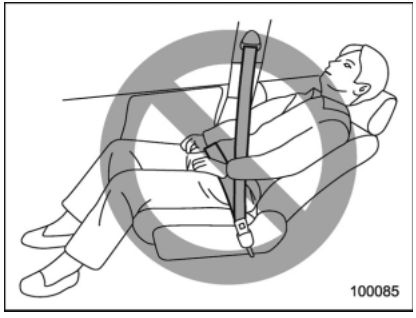

⚠ WARNING

To prevent the passenger from sliding under the seatbelt in the event of a collision, always put the seatback in the upright position while the vehicle is in motion. Also, do not place objects such as cushions between the passenger and the seatback. If you do so, the risk of sliding under the lap belt and of the lap belt sliding up over the abdomen will increase, and both can result in serious internal injury or death.

■ Seat cushion height adjustment (driver's seat)

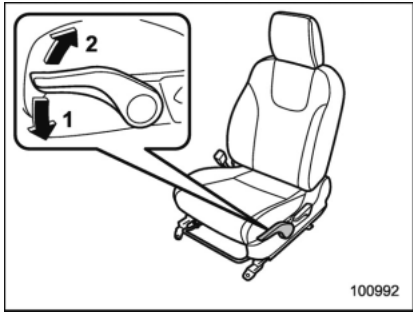

1) When the lever is pushed down, the seat is lowered.
2) When the lever is pulled up, the seat rises.

The height of the seat can be adjusted by moving the seat cushion adjustment lever up and down.

■ Head restraint adjustment (if equipped)

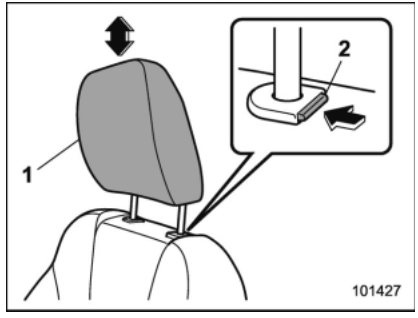

1) Head restraint
2) Release button

Both the driver's seat and the front passenger's seat are equipped with head restraints.

The head restraint should be adjusted so that the center of the head restraint is closest to the top of the occupant's ears.

To raise:

Pull the head restraint up.

To lower:

Push the head restraint down while pressing the release button on the top of the seatback.

To remove:

While pressing the release button, pull out the head restraint.

To install:

Install the head restraint into the holes that are located on the top of the seatback until the head restraint locks.

⚠ WARNING

- **Never drive the vehicle with the head restraints removed because they are designed to reduce the risk of serious neck injury in the event that the vehicle is struck from the rear. Therefore, when you remove the head restraints, you must reinstall all head restraints to protect vehicle occupants.**
- **All occupants, including the driver, should not operate a vehicle or sit in a vehicle's seat until the head restraints are placed in their proper positions in order to minimize the risk of neck injury in the event of a crash.**

■ Active head restraint (if equipped)

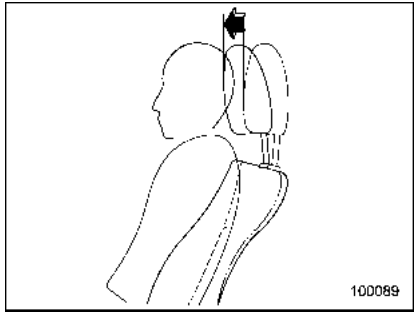

The front seats of your vehicle are equipped with active head restraints. They automatically tilt forward slightly in the event the vehicle is struck from the rear, decreasing the amount of rearward head movement and thus reducing the risk of whiplash. For maximum effectiveness, the head restraint should be adjusted so that the center of the head restraint is closest to the top of the occupant's ears.

⚠ CAUTION

- **Each active head restraint is effective only when its height is properly adjusted and driver/passenger sits in the correct position on the seat.**
- **If your vehicle is involved in a rear-end collision, have an authorized SUBARU dealer inspect the active head restraints.**
- **The active head restraints may not operate in the event the vehicle experiences only a slight impact in the rear.**
- **The active head restraints may be damaged if they are pushed hard from behind or subjected to shock. As a result, they may not function if the vehicle suffers a rear impact.**

Seat heater (if equipped)

The seat heater is equipped in the front seats.

The seat heater operates when the ignition switch is either in the “Acc” or “ON” position.

⚠ CAUTION

- **There is a possibility that people with delicate skin may suffer slight burns even at low temperatures if they use the seat heater for a long period of time. When using the heater, always be sure to warn the persons concerned.**
- **Do not put anything on the seat which insulates against heat, such as a blanket, cushion, or similar items. This may cause the seat heater to overheat.**

NOTE

Use of the seat heater for a long period of time while the engine is not running can cause battery discharge.

■ Type A seat heater

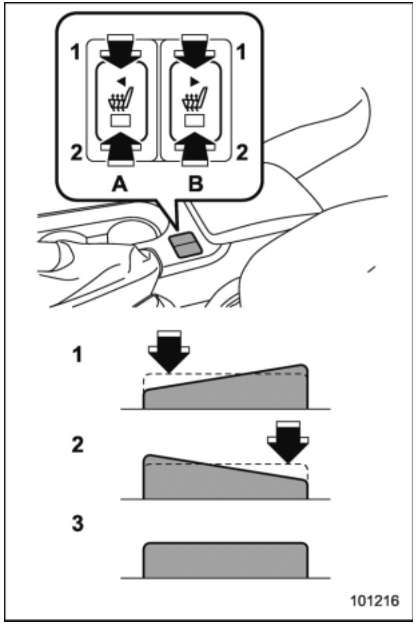

1) **HI** – Rapid heating
2) **LO** – Normal heating
3) **OFF** – Off
A) Left-hand side
B) Right-hand side

To turn on the seat heater, push the “LO” or “HI” position on the switch, as desired, depending on the temperature.
Selecting the “HI” position will cause the seat to heat up quicker.

To turn off the seat heater, lightly press the opposite side of the current position.

The indicator located on the switch illuminates when the seat heater is in operation. When the vehicle’s interior is warmed enough or before you leave the vehicle, be sure to turn the switch off.

■ Type B seat heater

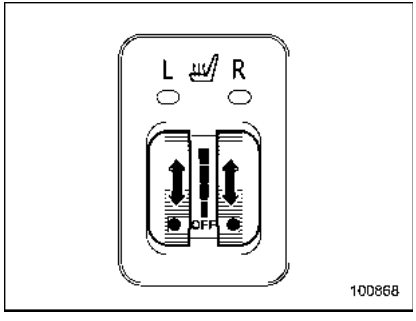

Each seat heater has four levels of adjustment. To use the heater in the right-hand seat, turn the “R” adjustment dial forward until the “●” mark reaches the

desired position. To activate the heater in the left-hand seat, turn the “L” adjustment dial forward until the “●” mark reaches the desired position. Each heater warms the seat most quickly with the “●” mark on the adjustment dial in the furthest-forward position. An indicator light next to the adjustment dial for each seat heater illuminates when that seat heater is activated.

When the vehicle’s interior is warmed enough or before you leave the vehicle, always turn the adjustment dial to the most rearward position so that the “●” mark reaches to the “OFF” position.

Rear seats



⚠ WARNING

Seatbelts provide maximum restraint when the occupant sits well back and upright in the seat. Do not put cushions or any other materials between occupants and seatbacks or seat cushions. If you do so, the risk of sliding under the lap belt and of the lap belt sliding up over the abdomen will increase, and both can result in serious internal injury or death.

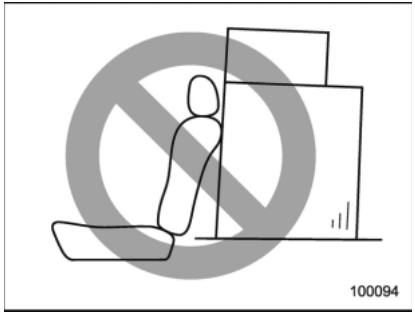

⚠ WARNING

Never stack luggage or other cargo higher than the top of the seatback because it could tumble forward and injure passengers in the event of a sudden stop or accident.

– CONTINUED –

■ Armrest (if equipped)

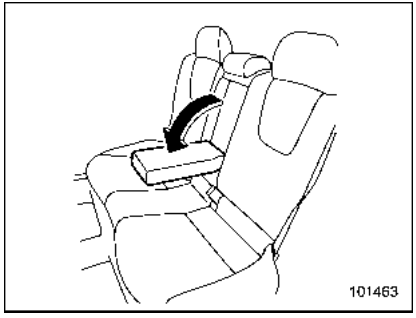

To lower the armrest, pull the top edge of the armrest down.

⚠ WARNING

To avoid serious injury, passengers must never be allowed to sit on the center armrest while the vehicle is in motion.

■ Head restraint adjustment

Both the rear window side seats and the rear center seat are equipped with head restraints.

⚠ WARNING

- **Never drive the vehicle with the head restraints removed because they are designed to reduce the risk of serious neck injury in the event that the vehicle is struck from the rear. Therefore, when you remove the head restraints, you must reinstall all head restraints to protect vehicle occupants.**
- **All occupants, including the driver, should not operate a vehicle or sit in a vehicle's seat until the head restraints are placed in their proper positions in order to minimize the risk of neck injury in the event of a crash.**

▼ Rear windows side seating position

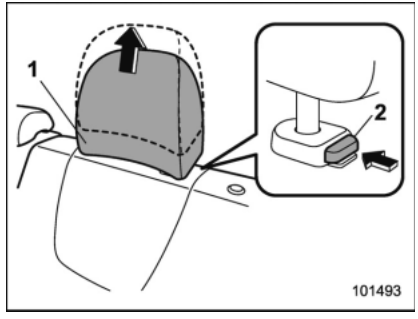

1) Head restraint
2) Release button

To remove:

While pressing the release button, pull out the head restraint.

To install:

Install the head restraint into the holes that are located on the top of the seatback until the head restraint locks.

▼ Rear center seating position

⚠ CAUTION

The head restraint is not intended to be used at the lowest position. Before sitting on the seat, raise the head restraint to the click position.

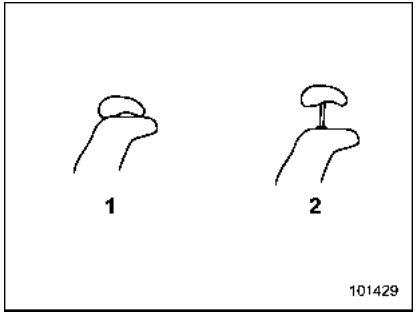

1) When not used (lowest position)
2) When used (click position)

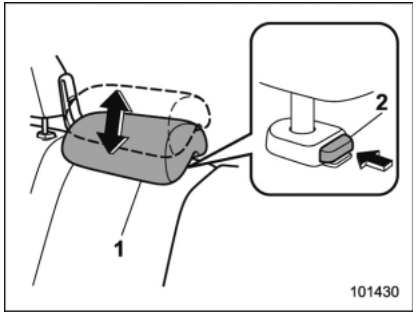

1) Head restraint
2) Release button

To raise:

Pull the head restraint up.

To lower:

Push the head restraint down while pressing the release button on the top of the seatback.

To remove:

While pressing the release button, pull out the head restraint.

To install:

Install the head restraint into the holes that are located on the top of the seatback until the head restraint locks.

When the rear-center seating position is occupied, raise the head restraint to an appropriate position depending on your sitting height. When the rear center seating position is not occupied, lower the head restraint to improve rearward visibility.

■ Folding down the rear seatback

⚠ WARNING

- **After returning the rear seatback to its original position, be certain to place all of the seatbelts and the tab attached to the seat cushion above the seat cushion. And make certain that the shoulder belts are fully visible.**
- **Never allow passengers to ride on the folded rear seatback or in the cargo area or trunk. Doing so may result in serious injury or death.**
- **Secure all objects and especially long items properly to prevent them from being thrown around inside the vehicle and causing serious injury during a sudden stop, a sudden steering maneuver or a rapid acceleration.**

▼ 4-door models

1. Lower the head restraints.

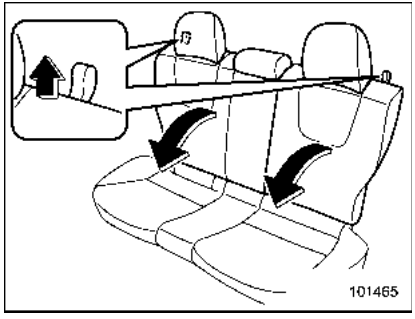

2. Unlock the seatback by pulling the

– CONTINUED –

release strap and then fold the seatback down.

To return the seatback to its original position, raise the seatback until it locks into place and make sure that it is securely locked.

You can keep the seatbacks locked when you leave your vehicle and valet key at a parking facility.

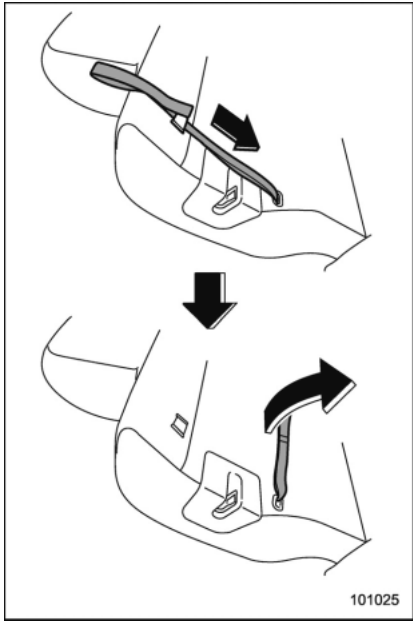

1. Pull the lock release strap behind the seatback out from its holder.
2. Raise the seatback until it locks into place with the lock release strap hanging in the trunk. Make sure that the seatback is securely locked.

In this case, perform the following steps to fold the seatback down again.

1. Open the trunk lid. Refer to “Trunk lid (4-door)” ☞2-23.
2. Access the lock release strap from the trunk, and fold the seatback forward while pulling the strap down.

▼ 5-door models

1. Lower the head restraints.

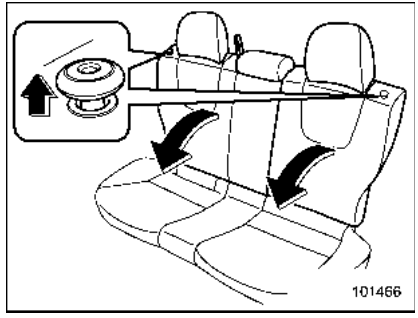

2. Unlock the seatback by pulling the release knob and then fold the seatback down.

To return the seatback to its original position, raise the seatback until it locks into place and make sure that it is securely locked.

Seatbelts

■ Seatbelt safety tips

⚠ WARNING

- **All persons in the vehicle should fasten their seatbelts BEFORE the vehicle starts to move. Otherwise, the possibility of serious injury becomes greater in the event of a sudden stop or accident.**
- **All belts should fit snugly in order to provide full restraint. Loose fitting belts are not as effective in preventing or reducing injury.**
- **Each seatbelt is designed to support only one person. Never use a single belt for two or more persons – even children. Otherwise, in an accident, serious injury or death could result.**
- **Replace all seatbelt assemblies including retractors and attaching hardware worn by occupants of a vehicle that has been in a serious accident. The entire assembly should be replaced even if damage is not obvious.**
- **Put children aged 12 and under in the rear seat properly restrained at all times. The SRS airbag deploys with considerable speed and force and can injure or even kill children, especially if they are 12 years of age and under and are not restrained or improperly restrained. Because children are lighter and weaker than adults, their risk of being injured from deployment is greater. For that reason, we strongly recommend that ALL children (including those in child seats and those that have outgrown child restraint devices) sit in the REAR seat properly restrained at all times in a child restraint device or in a seatbelt, whichever is appropriate for the child's height and weight.**

  Secure ALL types of child restraint devices (including forward facing child seats) in the REAR seats at all times.

  NEVER INSTALL A REARWARD FACING CHILD SEAT IN THE FRONT SEAT. DOING SO RISKS SERIOUS INJURY OR DEATH TO THE CHILD BY PLACING THE CHILD'S HEAD TOO CLOSE TO THE SRS AIRBAG.

According to accident statistics, children are safer when properly restrained in the rear seating positions than in the front seating positions. For instructions and precautions concerning the child restraint system, refer to "Child restraint systems" ☞1-21.

Your vehicle is equipped with a crash sensing and diagnostic module, which will record the use of the seatbelt by the front passenger when any of the SRS frontal, side and curtain airbags deploy.

▼ Infants or small children

Use a child restraint system that is suitable for your vehicle. Refer to "Child restraint systems" ☞1-21.

▼ Children

If a child is too big for a child restraint system, the child should sit in the rear seat and be restrained using the seatbelts. According to accident statistics, children are safer when properly restrained in the rear seating positions than in the front seating positions. Never allow a child to stand up or kneel on the seat.

If the shoulder portion of the belt crosses the face or neck, adjust the shoulder belt anchor height (window-side seating posi-

– CONTINUED –

tions only) and then if necessary move the child closer to the belt buckle to help provide a good shoulder belt fit. Care must be taken to securely place the lap belt as low as possible on the hips and not on the child's waist. If the shoulder portion of the belt cannot be properly positioned, a child restraint system should be used. Never place the shoulder belt under the child's arm or behind the child's back.

▼ **Expectant mothers**

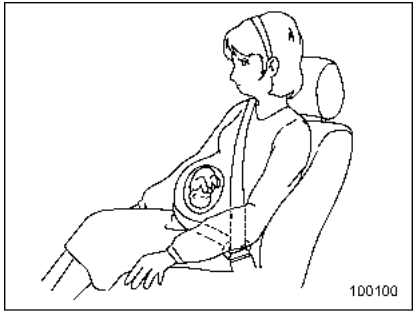

Expectant mothers also need to use the seatbelts. They should consult their doctor for specific recommendations. The lap belt should be worn securely and as low as possible over the hips, not over the waist.

■ Emergency Locking Retractor (ELR)

The driver's seatbelt has an Emergency Locking Retractor (ELR).

The emergency locking retractor allows normal body movement but the retractor locks automatically during a sudden stop, impact or if you pull the belt very quickly out of the retractor.

■ Automatic/Emergency Locking Retractor (A/ELR)

Each passenger's seatbelt has an Automatic/Emergency Locking Retractor (A/ELR). The Automatic/Emergency Locking Retractor normally functions as an Emergency Locking Retractor (ELR). The A/ELR has an additional locking mode "Automatic Locking Retractor (ALR) mode" intended to secure a child restraint system. When the seatbelt is once drawn out completely and is then retracted even slightly, the retractor locks the seatbelt in that position and the seatbelt cannot be extended. As the belt is rewinding, clicks will be heard which indicate the retractor functions as an ALR. When the seatbelt is retracted fully, the ALR mode is released.

When securing a child restraint system on the rear seats by the use of the seatbelt, the seatbelt must be changed over to the Automatic Locking Retractor (ALR) mode.

When the child restraint system is removed, make sure that the seatbelt retracts fully and the retractor returned to the Emergency Locking Retractor (ELR) mode.

For instructions on how to convert the retractor to the ALR mode and restore it to the ELR mode, refer to "Installing child restraint systems with A/ELR seatbelt" ☞1-24.

■ Seatbelt warning light and chime

Refer to "Seatbelt warning light and chime" ☞3-13.

■ Fastening the seatbelt

⚠ WARNING

- **Never use a belt that is twisted or reversed. In an accident, this can increase the risk or severity of injury.**
- **Keep the lap belt as low as possible on your hips. In a collision, this spreads the force of the lap belt over stronger hip bones instead of across the weaker abdomen.**

- **Seatbelts provide maximum restraint when the occupant sits well back and upright in the seat. To reduce the risk of sliding under the seatbelt in a collision, the front seatbacks should be always used in the upright position while the vehicle is running. If the front seatbacks are not used in the upright position in a collision, the risk of sliding under the lap belt and of the lap belt sliding up over the abdomen will increase, and both can result in serious internal injury or death.**
- **Do not put cushions or any other materials between occupants and seatbacks or seat cushions. If you do so, the risk of sliding under the lap belt and of the lap belt sliding up over the abdomen will increase, and both can result in serious internal injury or death.**

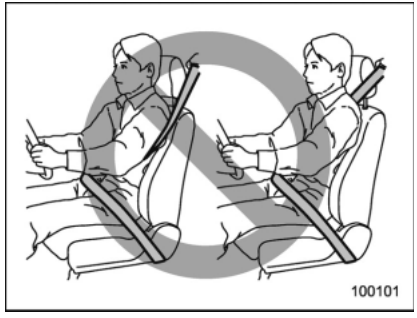

⚠ WARNING

Never place the shoulder belt under the arm or behind the back. If an accident occurs, this can increase the risk or severity of injury.

⚠ CAUTION

Metallic parts of the seatbelt can become very hot in a vehicle that has been closed up in sunny weather; they could burn an occupant. Do not touch such hot parts until they cool.

▼ Front seatbelts

1. Adjust the seat position according to the following procedure.

Driver's seat: Adjust the seatback to the upright position. Move the seat as far from the steering wheel as practical while still maintaining full vehicle control.

Front passenger's seat: Adjust the seatback to the upright position. Move the seat as far back as possible.

2. Sit well back in the seat.
3. Pick up the tongue plate and pull the belt out slowly. Do not let it get twisted. If the belt stops before reaching the buckle, return the belt slightly and pull it out more slowly. If the belt still cannot be unlocked, let the belt retract slightly after giving it a strong pull, then pull it out slowly again.

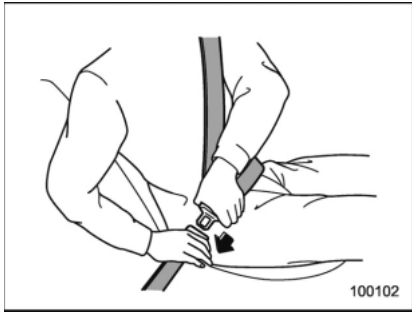

– CONTINUED –

4. Insert the tongue plate into the buckle until you hear a click.

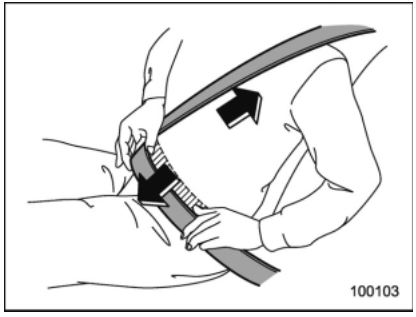

5. To make the lap part tight, pull up on the shoulder belt.
6. Place the lap belt as low as possible on your hips, not on your waist.

▽ Adjusting the front seat shoulder belt anchor height

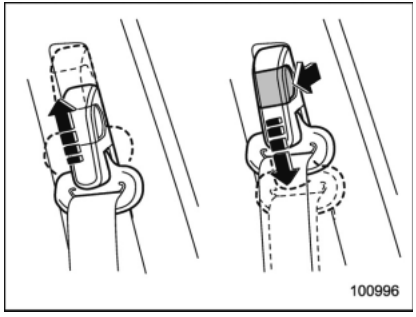

The shoulder belt anchor height should be adjusted to the position best suited for the driver/front passenger. Always adjust the anchor height so that the shoulder belt passes over the middle of the shoulder without touching the neck.

To raise:
Slide the anchor up.
To lower:
Pull the release knob and slide the anchor down.

Pull down on the anchor to make sure that it is locked in place.

⚠ WARNING

When wearing the seatbelts, make sure the shoulder portion of the webbing does not pass over your neck. If it does, adjust the seatbelt anchor to a lower position. Placing the shoulder belt over the neck may result in neck injury during sudden braking or in a collision.

▽ Unfastening the seatbelt

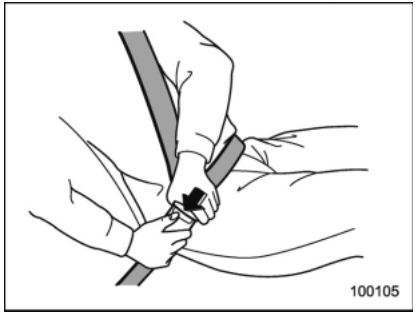

Push the button on the buckle.
Before closing the door, make sure that the belts are retracted properly to avoid catching the belt webbing in the door.

▼ Rear seatbelts (except rear center seatbelt on 5-door models)

1. Sit well back in the seat.
2. Pick up the tongue plate and pull the belt out slowly. Do not let it get twisted. If the belt stops before reaching the buckle, return the belt slightly and pull it out more slowly. If the belt still cannot be unlocked, let the belt retract slightly after giving a strong pull on it, then pull it out slowly again.

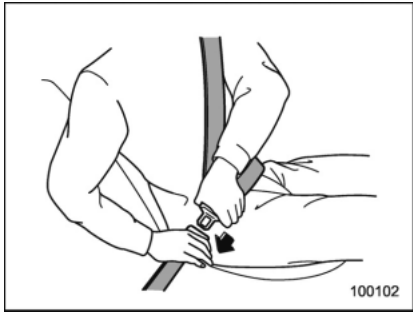

3. Insert the tongue plate into the buckle until you hear a click.

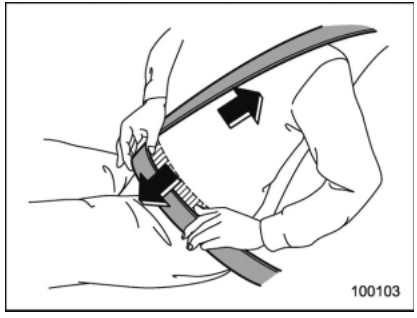

4. To make the lap part tight, pull up on the shoulder belt.
5. Place the lap belt as low as possible on your hips, not on your waist.

▽ Unfastening the seatbelt

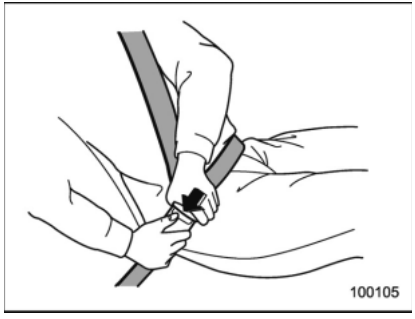

Push the button on the buckle.

Before closing the door, make sure that the belts are retracted properly to avoid catching the belt webbing in the door.

– CONTINUED –

▼ **Rear center seatbelt on 5-door models**

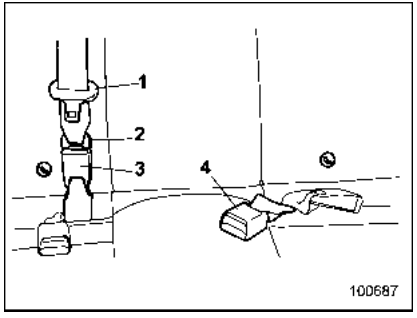

1) Center seatbelt tongue plate
2) Connector (tongue)
3) Connector (buckle)
4) Center seatbelt buckle

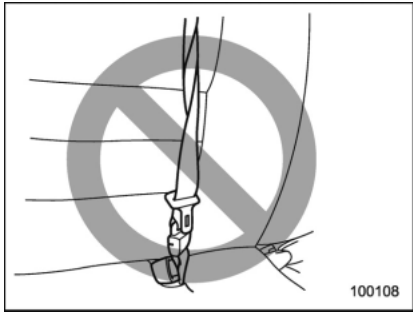

⚠ WARNING

Fastening the seatbelt with the webbing twisted can increase the risk or severity of injury in an accident. When fastening the belt after it is pulled out from the retractor, especially when inserting the connector's tongue plate into the mating buckle (on right-hand side), always check that the webbing is not twisted.

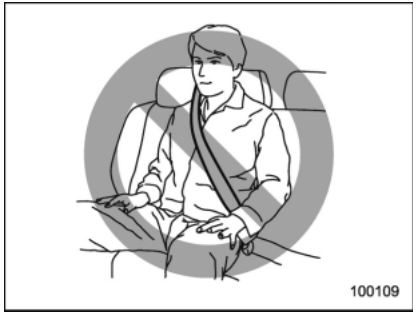

⚠ WARNING

Be sure to fasten both tongue plates to the respective buckles. If the seatbelt is used only as a shoulder belt (with the connector's tongue plate not fastened to the connector's buckle on the right-hand side), it cannot properly restrain the wearer in position in an accident, possibly resulting in serious injury or death.

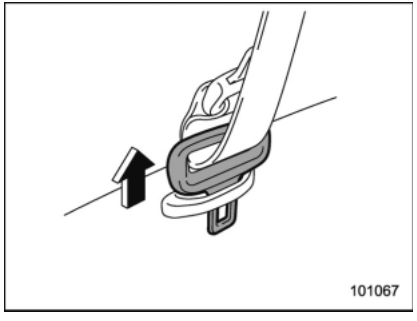

The rear center seatbelt is stowed in the seatbelt holder on the right side of the cargo area.

1. Remove the tongue plate from the belt holder and pull out the seatbelt slowly.

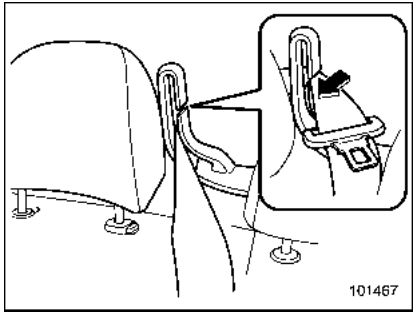

2. After drawing out the seatbelt, pass it through the belt guide as follows: First insert one edge of the belt into the open gap in the belt guide; then slide the rest of the belt in, so that the whole belt fits inside.

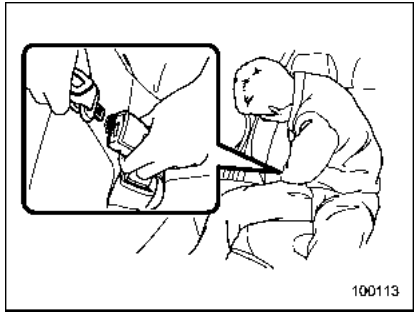

3. After confirming that the webbing is not twisted, insert the connector (tongue) attached at the webbing end into the buckle on the right-hand side until a click is heard.

If the belt stops before reaching the buckle, return the belt slightly and pull it out more slowly. If the belt still cannot be unlocked, let the belt retract slightly after giving it a strong pull, then pull it out slowly again.

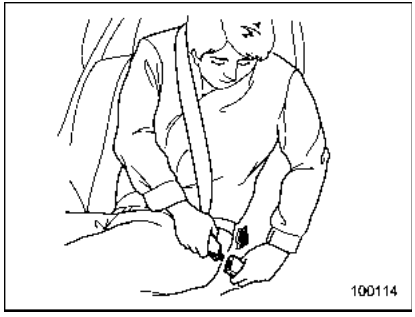

4. Insert the center seatbelt tongue plate into the center seatbelt buckle marked “CENTER” on the left-hand side until it clicks.

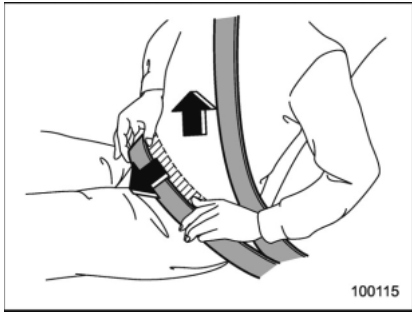

5. To make the lap part tight, pull up on the shoulder belt.

– CONTINUED –

6. Place the lap belt as low as possible on your hips, not on your waist.

▽ **Unfastening the seatbelt**

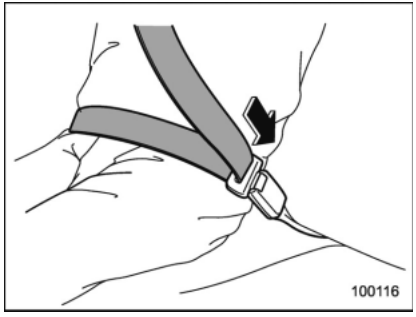

Push the release button of the center seatbelt buckle (on the left-hand side) to unfasten the seatbelt.

NOTE

When the seatback is folded down for greater cargo area, it is necessary to disconnect the connector.

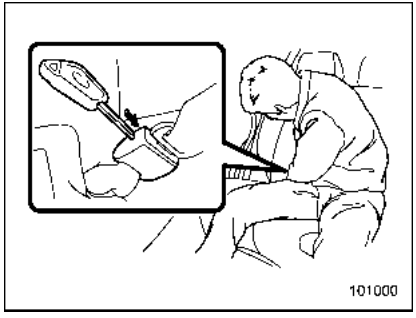

1. Insert a key or other hard pointed object into the slot in the connector (buckle) on the right-hand side and push it in, and the connector (tongue) plate will disconnect from the buckle.

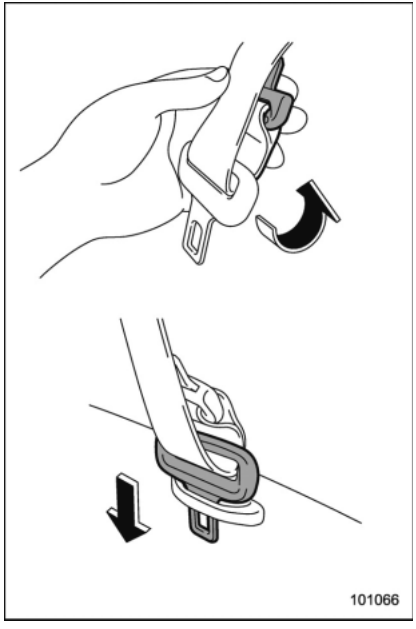

2. Allow the retractor to roll up the belt. You should hold the webbing end and guide it back into the retractor while it is rolling up. Insert the connector (tongue) into the belt holder.

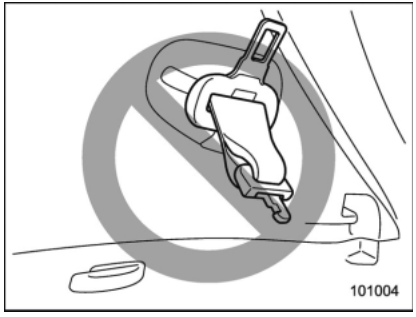

CAUTION

- **Do not allow the retractor to roll up the seatbelt too quickly. Otherwise, the metal tongue plates may hit against the trim, resulting in damaged trim.**
- **Have the seatbelt fully rolled up so that the tongue plates are neatly stored. A hanging tongue plate can swing and hit against the trim during driving, causing damage to the trim.**

■ Seatbelt maintenance

To clean the seatbelts, use a mild soap and lukewarm water. Never bleach or dye the belts because this could seriously affect their strength.

Inspect the seatbelts and attachments including the webbing and all hardware periodically for cracks, cuts, gashes, tears, damage, loose bolts or worn areas. Replace the seatbelts even if only minor damage is found.

CAUTION

- **Keep the belts free of polishes, oils, chemicals and particularly battery acid.**
- **Never attempt to make modifications or changes that will prevent the seatbelt from operating properly.**

Front seatbelt pretensioners

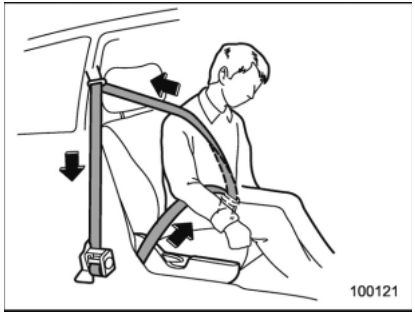

The driver's and front passenger's seatbelts have a seatbelt pretensioner. The seatbelt pretensioners are designed to be activated in the event of an accident involving a moderate to severe frontal collision.

The pretensioner sensor also serves as the frontal SRS airbag sensor. If the sensor detects a certain predetermined amount of force during a frontal collision, the front seatbelt is quickly drawn back in by the retractor to take up the slack so that the belt more effectively restrains the front seat occupant.

When a seatbelt pretensioner is activated, an operating noise will be heard and a

– CONTINUED –

small amount of smoke will be released. These occurrences are normal and not harmful. This smoke does not indicate a fire in the vehicle.

Once the seatbelt pretensioner has been activated, the seatbelt retractor remains locked. Consequently, the seatbelt can not be pulled out and retracted and therefore must be replaced.

NOTE

• Seatbelt pretensioners are not designed to activate in minor frontal impacts, in side or rear impacts or in roll-over accidents.
• The driver's seat and passenger's seat pretensioners and frontal SRS airbag operate simultaneously.
• Pretensioners are designed to function on a one-time-only basis. In the event that a pretensioner is activated, both the driver's and front passenger's seatbelt retractor assemblies must be replaced only by an authorized SUBARU dealer. When replacing seatbelt retractor assemblies, use only genuine SUBARU parts.
• If either front seatbelt does not retract or cannot be pulled out due to a malfunction or activation of the pretensioner, contact your SUBARU dealer as soon as possible.
• If the front seatbelt retractor assembly or surrounding area has been damaged, contact your SUBARU dealer as soon as possible.
• When you sell your vehicle, we urge you to explain to the buyer that it has seatbelt pretensioners by alerting the buyer to the contents of this section.

⚠ WARNING

- **To obtain maximum protection, the occupants should sit in an upright position with their seatbelts properly fastened. Refer to "Seatbelts" ☞1-11.**
- **Do not modify, remove or strike the front seatbelt retractor assemblies or surrounding area. This could result in accidental activation of the seatbelt pretensioners or could make the system inoperative, possibly resulting in serious injury. Seatbelt pretensioners have no user-serviceable parts. For required servicing of front seatbelt retractors equipped with seatbelt pretensioners, see your nearest SUBARU dealer.**
- **When discarding front seatbelt retractor assemblies or scrapping the entire vehicle due to collision damage or for other reasons, consult your SUBARU dealer.**

■ System monitors

A diagnostic system continually monitors the readiness of the seatbelt pretensioner while the vehicle is being driven. The seatbelt pretensioners share the control module with the SRS airbag system. Therefore, if any malfunction occurs in a seatbelt pretensioner, the SRS airbag system warning light will illuminate. For details, refer to "SRS airbag system monitors" ☞1-55.

■ System servicing

⚠ WARNING

- **When discarding a seatbelt retractor assembly or scrapping the entire vehicle damaged by a collision, consult your SUBARU dealer.**
- **Tampering with or disconnecting the system's wiring could result in accidental activation of the seatbelt pretensioner and/or SRS airbag or could make the**

system inoperative, which may result in serious injury. Do not use electrical test equipment on any circuit related to the seatbelt pretensioner and SRS airbag systems. For required servicing of the seatbelt pretensioner, consult your nearest SUBARU dealer.

⚠ CAUTION

The front sub sensors are located on both the right and left sides at the front of the vehicle, and the SRS airbag control module including the impact sensors is located under the center console. If you need service or repair in those areas or near the front seatbelt retractors, have the work performed by your authorized SUBARU dealer.

NOTE

If the front part of the vehicle is damaged in an accident to the extent that the seatbelt pretensioner does not operate, contact your SUBARU dealer as soon as possible.

■ Precautions against vehicle modification

Always consult your SUBARU dealer if you want to install any accessory parts to your vehicle.

⚠ CAUTION

Do not perform any of the following modifications. Such modifications can interfere with proper operation of the seatbelt pretensioners.

- **Attachment of any equipment (bush bar, winches, snow plow, skid plate, etc.) other than genuine SUBARU accessory parts to the front end.**
- **Modification of the suspension system or front end structure.**
- **Installation of a tire of different size and construction from the tires specified on the vehicle placard attached to the driver's door pillar or specified for individual vehicle models in this Owner's Manual.**

Child restraint systems

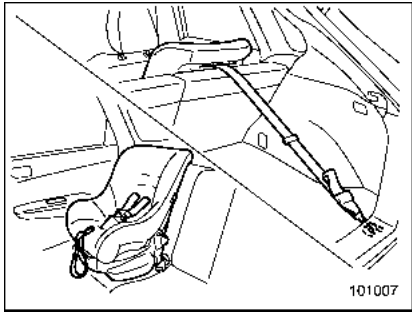

Infants and small children should always be placed in an infant or child restraint system in the rear seat while riding in the vehicle. You should use an infant or child restraint system that meets Federal Motor Vehicle Safety Standards or Canada Motor Vehicle Safety Standards, is compatible with your vehicle and is appropriate for the child's age and size. All child restraint systems are designed to be secured in vehicle seats by lap belts or the lap belt portion of a lap/shoulder belt (except those described in "Installation of child restraint systems by use of lower and tether anchorages (LATCH)" ☞1-29).

Children could be endangered in an accident if their child restraints are not

– CONTINUED –

properly secured in the vehicle. When installing the child restraint system, carefully follow the manufacturer's instructions.

According to accident statistics, children are safer when properly restrained in the rear seating positions than in the front seating positions.

All U.S. states and Canadian provinces require that infants and small children be restrained in an approved child restraint system at all times while the vehicle is moving.

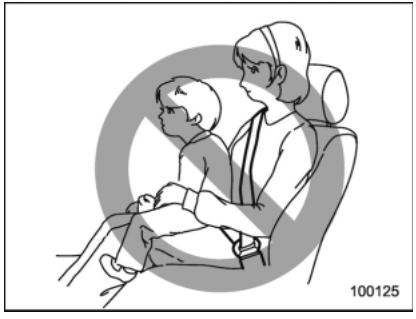

⚠ WARNING

Never let a passenger hold a child on his or her lap or in his or her arms while the vehicle is moving. The passenger cannot protect the child from injury in a collision, because the child will be caught between the passenger and objects inside the vehicle.

Additionally, holding a child in your lap or arms in the front seat exposes that child to another serious danger. Since the SRS airbag deploys with considerable speed and force, the child could be injured or even killed.

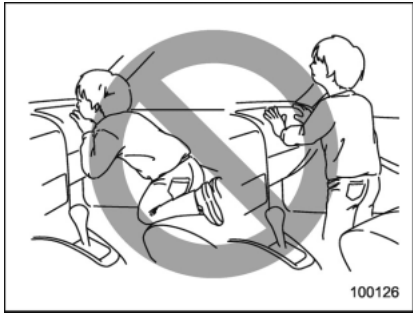

⚠ WARNING

Children should be properly restrained at all times. Never allow a child to stand up, or to kneel on any seat. Unrestrained children will be thrown forward during sudden stop or in an accident and can be injured seriously.

Additionally, children standing up or kneeling on or in front of the front seat are exposed another serious danger. Since the SRS airbag deploys with considerable speed and force, the child could be injured or even killed.

■ Where to place a child restraint system

The following are SUBARU's recommendations on where to place a child restraint system in your vehicle.

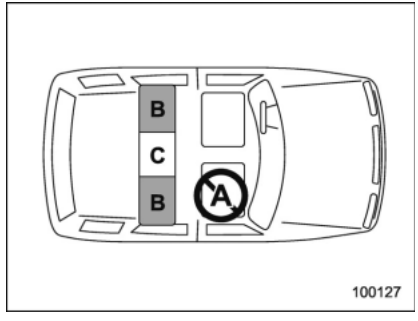

A: Front passenger's seat

You should not install a child restraint system (including a booster seat) due to the hazard to children posed by the passenger's airbag.

B: Rear seat, window-side seating positions

Recommended positions for all types of child restraint systems.

In these positions, Automatic/Emergency Locking Retractor (A/ELR) seatbelts and lower anchorages (bars) are provided for installing a child restraint system.

Some types of child restraints might not be able to be secured firmly due to projection of the seat cushion.

In this seating position, you should use only a child restraint system that has a bottom base that fits snugly against the contours of the seat cushion and can be securely retained using the seatbelt.

C: Rear seat, center seating position

Installing a child restraint system is not recommended, although the A/ELR seatbelt and an upper anchorage (tether anchorage) (except in Latin American models) are provided in this position.

Some types of child restraints might not be able to be secured firmly due to projection of the seat cushion.

In this seating position, you should use only a child restraint system that has a bottom base that fits snugly against the contours of the seat cushion and can be securely retained using the seatbelt.

If it is unavoidable to install a child restraint system in the rear seat's center seating position, lower the center head restraint to the lowest position and install the child restraint system by correctly passing the rear center seatbelt through the belt guide.

⚠ WARNING

Put children aged 12 and under in the rear seat properly restrained at all times. The SRS airbag deploys with considerable speed and force and can injure or even kill children, especially if they are 12 years of age and under and are not restrained or improperly restrained. Because children are lighter and weaker than adults, their risk of being injured from deployment is greater.

For that reason, be sure to secure ALL types of child restraint devices (including forward facing child seats) in the REAR seats at all times. You should choose a restraint device which is appropriate for the child's age, height and weight. According to accident statistics, children are safer when properly restrained in the rear seating positions than in the front seating positions.

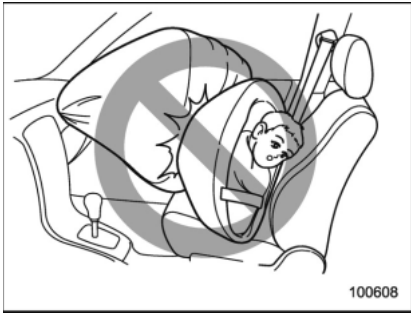

⚠ WARNING

SINCE YOUR VEHICLE IS EQUIPPED WITH A PASSENGER'S SRS AIRBAG, NEVER INSTALL A REARWARD FACING CHILD

– CONTINUED –

SAFETY SEAT IN THE FRONT PASSENGER'S SEAT. DOING SO RISKS SERIOUS INJURY OR DEATH TO THE CHILD BY PLACING THE CHILD'S HEAD TOO CLOSE TO THE SRS AIRBAG.

■ Choosing a child restraint system

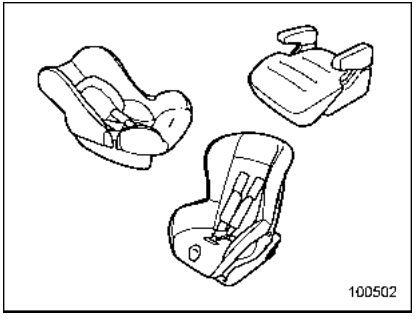

Choose a child restraint system that is appropriate for the child's age and size (weight and height) in order to provide the child with proper protection. The child restraint system should meet all applicable requirements of Federal Motor Vehicle Safety Standards for the United States or of Canada Motor Vehicle Safety Standards for Canada. It can be identified by looking for the label on the child restraint system or the manufacturer's statement of compliance in the document attached to the system.

Also it is important for you to make sure that the child restraint system is compatible with the vehicle in which it will be used.

■ Installing child restraint systems with A/ELR seatbelt

⚠ WARNING

- **Child restraint systems and seatbelts can become hot in a vehicle that has been closed up in sunny weather; they could burn a small child. Check the child restraint system before you place a child in it.**
- **Do not leave an unsecured child restraint system in your vehicle. Unsecured child restraint systems can be thrown around inside of the vehicle in a sudden stop, turn or accident; they can strike and injure vehicle occupants as well as result in serious injuries or death to the child.**

⚠ CAUTION

When you install a child restraint system, follow the manufacturer's instructions supplied with it. After installing the child restraint system, check to ensure that it is held securely in position. If it is not held tight and secure, the danger of your child suffering personal injury in the event of an accident may be increased.

▼ Installing a rearward facing child restraint

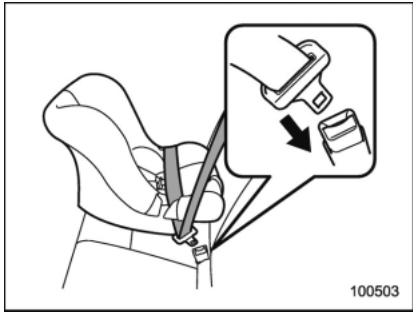

1. Place the child restraint system in the rear seating position.
2. Run the lap and shoulder belt through

or around the child restraint system following the instructions provided by its manufacturer.

3. Insert the tongue plate into the buckle until you hear a click.

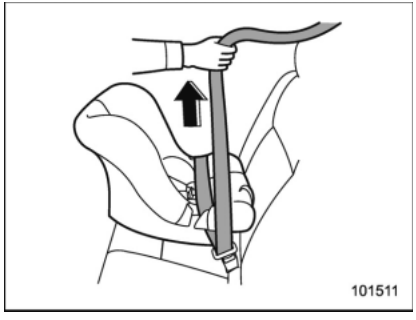

4. Take up the slack in the lap belt.

5. Pull out the seatbelt fully from the retractor to change the retractor over from the Emergency Locking Retractor (ELR) to the Automatic Locking Retractor (ALR) function. Then, allow the belt to rewind into the retractor. As the belt is rewinding, clicks will be heard which indicate the retractor functions as ALR.

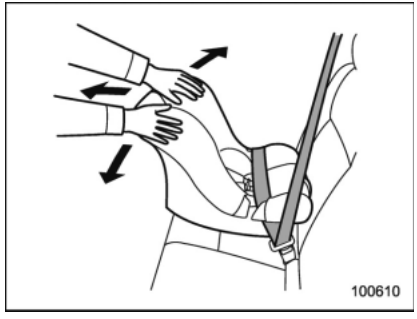

6. Push and pull the child restraint system forward and from side to side to check if it is firmly secured. Sometimes a child restraint can be more firmly secured by pushing it down into the seat cushion and then tightening the seatbelt.

7. Pull at the shoulder portion of the belt to confirm that it cannot be pulled out (ALR properly functioning).

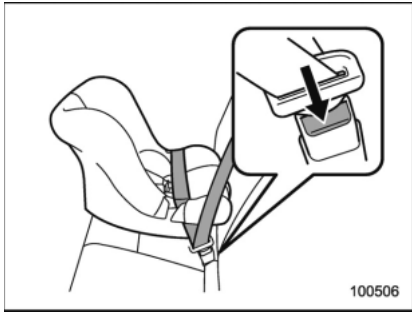

8. To remove the child restraint system, press the release button on the seatbelt buckle and allow the belt to retract completely. The belt will return to the ELR mode.

⚠ WARNING

NEVER INSTALL A REARWARD FACING CHILD SEAT IN THE FRONT PASSENGER'S SEAT. DOING SO RISKS SERIOUS INJURY OR DEATH TO THE CHILD BY PLACING THE CHILD'S HEAD TOO CLOSE TO THE SRS AIRBAG.

– CONTINUED –

NOTE

When the child restraint system is no longer in use, remove it and restore the ELR function of the retractor. That function is restored by allowing the seatbelt to retract fully.

▼ Installing forward facing child restraint

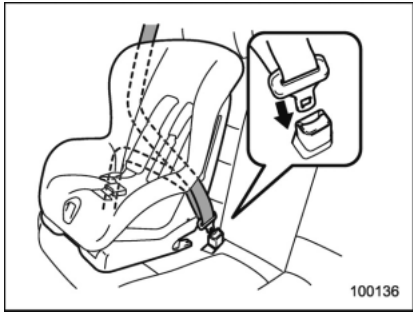

1. Place the child restraint system in the rear seating position.
2. Run the lap and shoulder belt through or around the child restraint system following the instructions provided by its manufacturer.
3. Insert the tongue plate into the buckle until you hear a click.

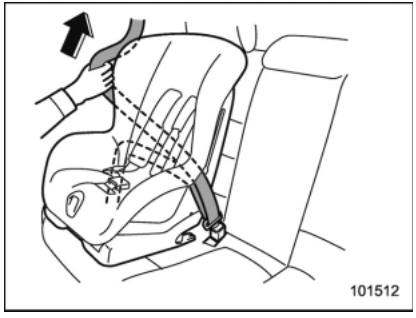

4. Take up the slack in the lap belt.
5. Pull out the seatbelt fully from the retractor to change the retractor over from the Emergency Locking Retractor (ELR) to the Automatic Locking Retractor (ALR) function. Then, allow the belt to rewind into the retractor. As the belt is rewinding, clicks will be heard which indicate the retractor functions as ALR.

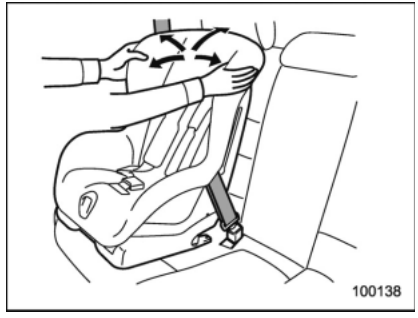

6. Before having a child sit in the child restraint system, try to move it back and forth and right and left to check if it is firmly secured. Sometimes a child restraint can be more firmly secured by pushing it down into the seat cushion and then tightening the seatbelt.
7. Pull at the shoulder portion of the belt to confirm that it cannot be pulled out (ALR properly functioning).

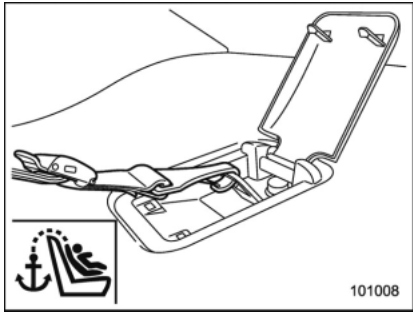

4-door models

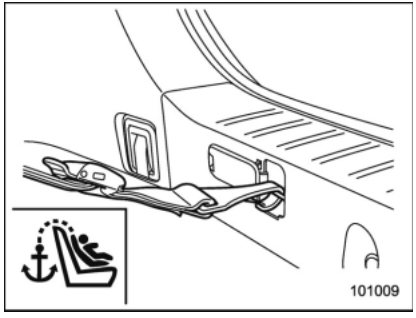

5-door models

8. If the child restraint system requires a top tether, latch the hook onto the top tether anchorage and tighten the top tether. For additional instructions, refer to "Top tether anchorages" ☞1-31.

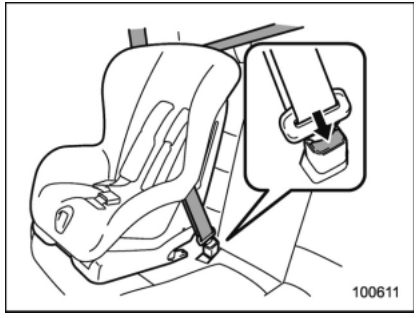

9. To remove the child restraint system, press the release button on the seatbelt buckle and allow the belt to retract completely. The belt will return to the ELR mode.

NOTE

When the child restraint system is no longer in use, remove it and restore the ELR function of the retractor. That function is restored by allowing the seatbelt to retract fully.

■ Installing a booster seat

⚠ WARNING

- **Child restraint systems and seatbelts can become hot in a vehicle that has been closed up in sunny weather; they could burn a small child. Check the child restraint system before you place a child in it.**
- **Do not leave an unsecured child restraint system in your vehicle. Unsecured child restraint systems can be thrown around inside of the vehicle in a sudden stop, turn or accident; they can strike and injure vehicle occupants as well as result in serious injuries or death to the child.**

⚠ CAUTION

When you install a child restraint system, follow the manufacturer's instructions supplied with it. After installing the child restraint system, check to ensure that it is held securely in position. If it is not held tight and secure, the danger of your child suffering personal injury in the event of an accident may be in-

– CONTINUED –

creased.

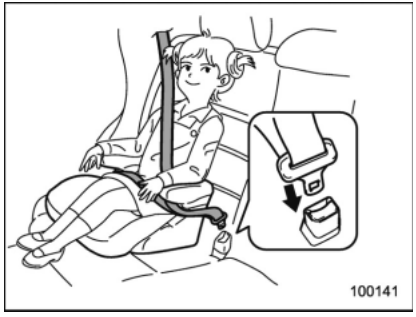

1. Place the booster seat in the rear seating position and sit the child on it. The child should sit well back on the booster seat.
2. Run the lap and shoulder belt through or around the booster seat and the child following the instructions provided by its manufacturer.
3. Insert the tongue plate into the buckle until you hear a click. Take care not to twist the seatbelt.

Make sure the shoulder belt is positioned across the center of child's shoulder and that the lap belt is positioned as low as possible on the child's hips.

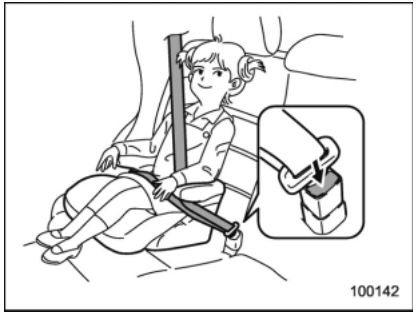

4. To remove the booster seat, press the release button on the seatbelt buckle and allow the belt to retract.

⚠ WARNING

- **Never use a belt that is twisted or reversed. In an accident, this can increase the risk or severity of injury to the child.**
- **Never place the shoulder belt under the child's arm or behind the child's back. If an accident occurs, this can increase the risk or severity of injury to the child.**
- **The seatbelt should fit snugly in order to provide full restraint. Loose fitting belts are not as effective in preventing or reducing injury.**
- **Place the lap belt as low as possible on the child's hips. A high-positioned lap belt will increase the risk of sliding under the lap belt and of the lap belt sliding up over the abdomen, and both can result in serious internal injury or death.**
- **Make sure the shoulder belt is positioned across the center of child's shoulder. Placing the shoulder belt over the neck may result in neck injury during sudden braking or in a collision.**

■ Installation of child restraint systems by use of lower and tether anchorages (LATCH)

⚠ WARNING

- **Child restraint systems and seatbelts can become hot in a vehicle that has been closed up in sunny weather; they could burn a small child. Check the child restraint system before you place a child in it.**
- **Do not leave an unsecured child restraint system in your vehicle. Unsecured child restraint systems can be thrown around inside of the vehicle in a sudden stop, turn or accident; they can strike and injure vehicle occupants as well as result in serious injuries or death to the child.**

⚠ CAUTION

When you install a child restraint system, follow the manufacturer's instructions supplied with it. After installing the child restraint system, check to ensure that it is held securely in position. If it is not held tight and secure, the danger of your child suffering personal injury in the event of an accident may be increased.

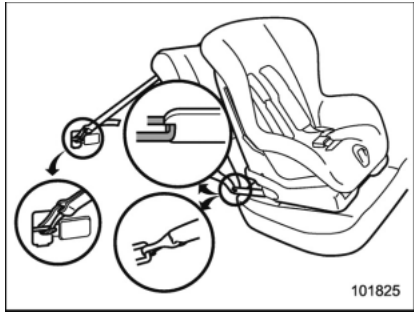

Some types of child restraint systems can be installed on the rear seat of your vehicle without use of the seatbelts. Such child restraint systems are secured to the designated anchorages provided on the vehicle body. The lower and tether anchorages are sometimes referred to as the LATCH system (**L**ower **A**nchors and **T**ethers for **CH**ildren).

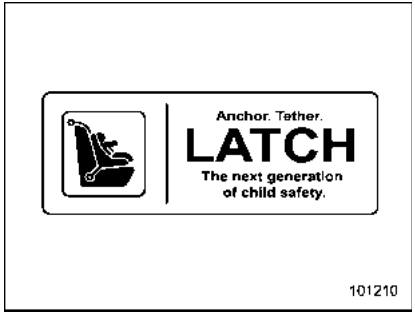

Your vehicle is equipped with four lower anchorages (bars) and two or three upper anchorages (tether anchorages) for accommodating such child restraint systems.

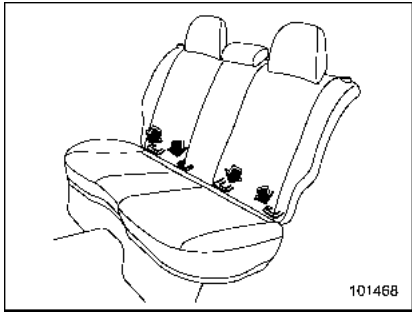

The lower anchorages (bars) are used for

– CONTINUED –

installing a child restraint system only on the rear seat window-side seating positions. For each window-side seating position, two lower anchorages are provided.

Each lower anchorage is located where the seat cushion meets the seatback.

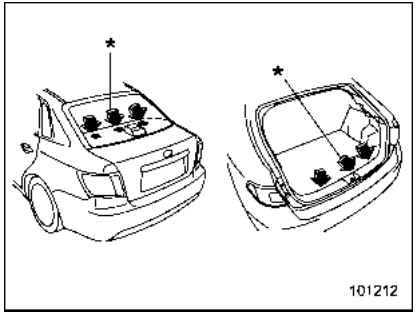

*: For the Latin American models, a tether anchorage is not provided in this center location.

The tether anchorages (upper anchorages) are provided at the locations shown in the above illustration.

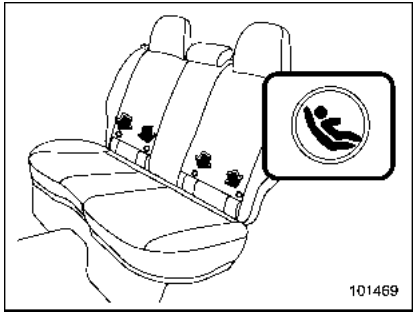

You will find marks "" at the bottom of the rear seat seatbacks. These marks indicate the positions of the lower anchorages (bars).

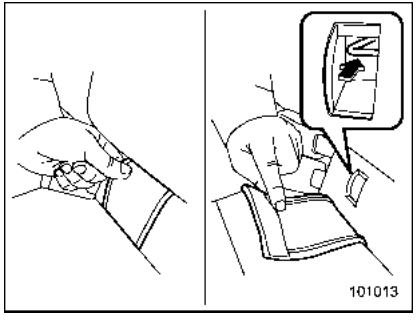

Each lower anchorage is located where the seat cushion meets the seatback.

1. Use the "" marks to locate the two lower anchorages (bars) for the position where you want to install the child restraint system.

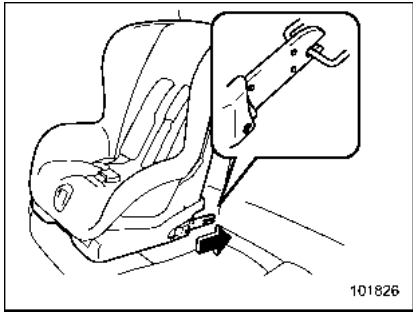

2. While following the instructions supplied by the child restraint system manufacturer, connect the lower hooks onto the lower anchorages located at "" marks on the bottom of the rear seatback. When the hooks are connected, make sure the adjacent seatbelts are not caught.

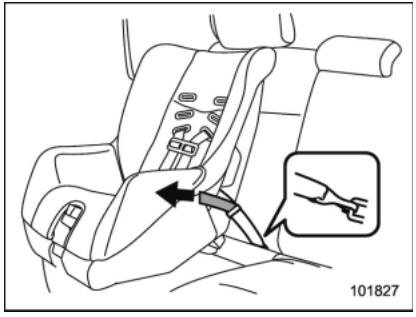

3. [If your child restraint system is of a flexible attachment type (which uses tether belts to connect the child restraint system properly to the lower anchorages)]
While pushing the child restraint into the seat cushion, pull both left and right lower tether belts up to secure the child restraint system firmly by taking up the slack in the belt.
4. Connect the top tether hook to the tether anchorage and firmly tighten the tether. For information on how to set the top tether, refer to “Top tether anchorages” ☞1-31.

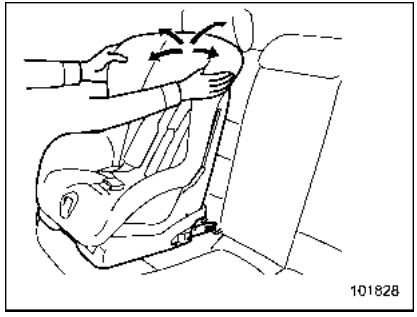

5. Before seating a child in the child restraint system, try to move it back and forth and right and left to verify that it is held securely in position.
6. To remove the child restraint system, follow the reverse procedures of installation.

If you have any question concerning this type of child restraint system, ask your SUBARU dealer.

■ Top tether anchorages

Your vehicle is equipped with two or three top tether anchorages so that a child restraint system having a top tether can be installed in the rear seat. When installing a child restraint system using top tether, proceed as follows, while observing the instructions by the child restraint system manufacturer.

Since a top tether can provide additional stability by offering another connection between a child restraint system and the vehicle, we recommend that you use a top tether whenever one is required or available.

– CONTINUED –

▼ Anchorage location

▽ 4-door models

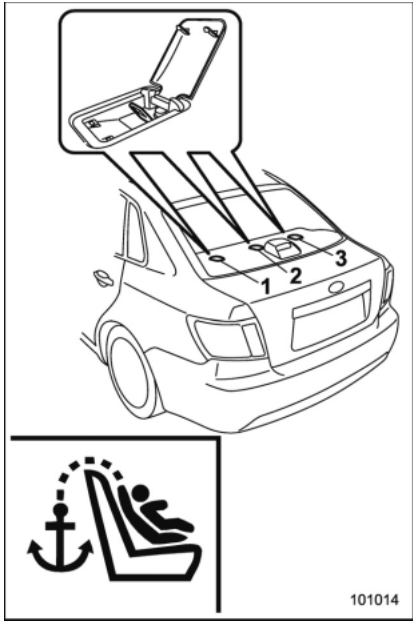

1) For left seat
2) For center seat (for the Latin American models, a tether anchorage is not provided in this center location.)
3) For right seat

Two or three upper anchorages are installed on the rear shelf behind the rear seat.

▽ 5-door models

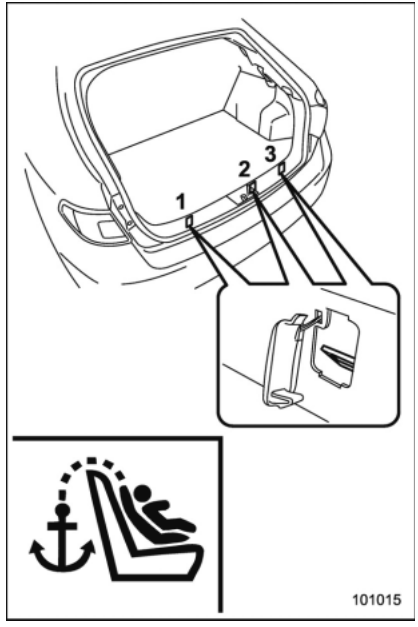

1) For left seat
2) For center seat (for the Latin American models, a tether anchorage is not provided in this center location.)
3) For right seat

There are two or three anchorages on the rear wall of the cargo area.

▼ **To hook the top tether**

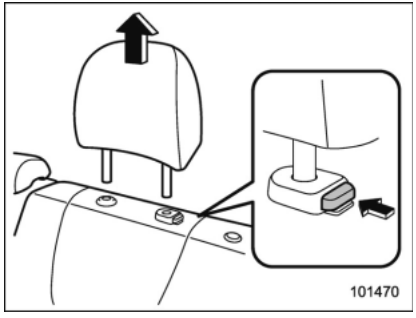

1. Remove the head restraint at the window-side seating position where the child restraint system has been installed with the lower anchorages or seatbelt; lift up the head restraint while pressing the release button. Store the head restraint in the trunk (4-door) or cargo area (5-door). Avoid placing the head restraint in the passenger compartment to prevent it from being thrown around in the passenger compartment in a sudden stop or a sharp turn.

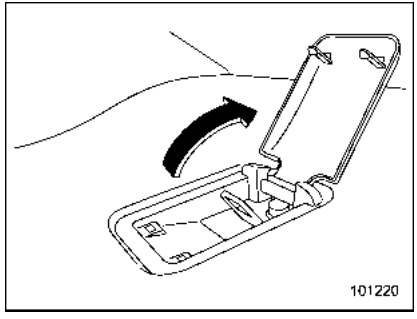

4-door models

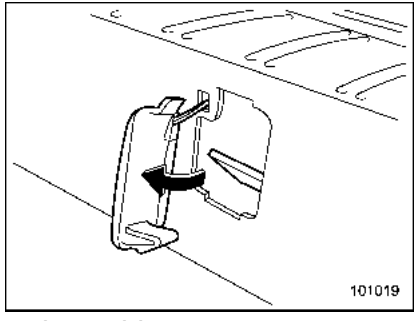

5-door models

2. Open or remove the cover for the appropriate upper anchorage.

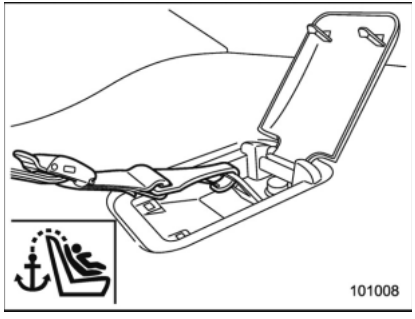

4-door models

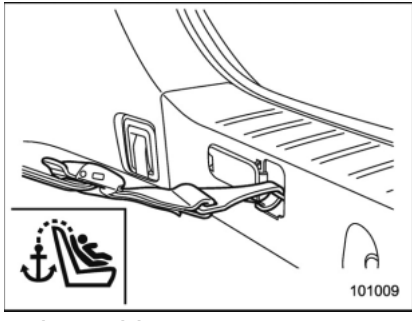

5-door models

3. Attach the child restraint top tether hook to the appropriate upper anchorage.
4. Tighten the top tether securely.

– CONTINUED –

Please contact your SUBARU dealer if you have any question regarding the installation of a child restraint system.

⚠ CAUTION

Always remove the head restraint when mounting a child restraint system with a top tether. Otherwise, the top tether cannot be fastened tightly.

*SRS airbag (Supplemental Restraint System airbag)

*SRS: This stands for supplemental restraint system. This name is used because the airbag system supplements the vehicle's seatbelts.

Your vehicle is equipped with a crash sensing and diagnostic module, which will record the use of the seatbelt by the front passenger when any of the SRS frontal, side and curtain airbags deploys.

Your vehicle is equipped with a supplemental restraint system in addition to a lap/shoulder belt at each front seating position and each rear window-side seating positions. The supplemental restraint system (SRS) consists of six airbags.

The configurations are as follows.

- Driver's and front passenger's **frontal** airbags
- Driver's and front passenger's **side** airbags
- **Curtain** airbags (for driver, front passenger, and window-side rear passengers)

These SRS airbags are designed only to be a supplement to the primary protection provided by the seatbelt.

The system also controls front seatbelt pretensioners. For operation instructions and precautions concerning the seatbelt pretensioner, refer to "Front seatbelt pretensioners" ☞1-19.

■ General precautions regarding SRS airbag system

⚠ WARNING

- **To obtain maximum protection in the event of an accident, the driver and all passengers in the vehicle should always wear seatbelts when the vehicle is moving. The SRS airbag is designed only to be a supplement to the primary protection provided by the seatbelt. It does not eliminate the need to fasten seatbelts. In combination with the seatbelts, it offers the best combined protection in case of a serious accident.**

  Not wearing a seatbelt increases the chance of severe injury or death in a crash even when the vehicle has the SRS airbag.

  For instructions and precautions concerning the seatbelt system, refer to "Seatbelts" ☞1-11.
- **The SRS side airbag and SRS**

curtain airbag are designed only to be a supplement to the primary protection provided by the seatbelt. They do not eliminate the need to fasten seatbelts. It is also important to wear your seatbelt to help avoid injuries that can result when an occupant is not seated in a proper upright position.

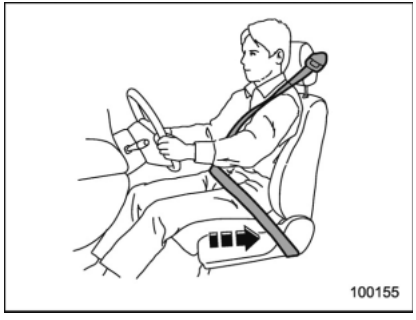

⚠ WARNING

The SRS airbags deploy with considerable speed and force. Occupants who are out of proper position when the SRS airbag deploys could suffer very serious injuries. Because the SRS airbag needs enough space for deployment, the driver should always sit upright and well back in the seat as far from the steering wheel as practical while still maintaining full vehicle control, and the front passenger should move the seat as far back as possible and sit upright and well back in the seat.



⚠ WARNING

- Do not sit or lean unnecessarily close to either front door. The SRS side airbag is stored in both front seat seatbacks next to the door, and it provides protection by deploying rapidly (faster than the blink of an eye) in the event of a side impact collision. However, the force of SRS side airbag deployment may cause injuries if your head or other parts of the body are too close to the SRS side airbag.
- Since your vehicle is equipped with SRS curtain airbags, do not sit or lean unnecessarily close to the front or rear door on either side. Also, do not put your head, arms and hands out of the window. The SRS curtain airbag on each side of the cabin is stored in the roof side (between the front pillar and a point over the rear seat), and it provides protection by deploying rapidly (faster than the blink of an eye) in the event of a side impact. However, the force of its deployment may cause injuries if your head is too close to it.
- Do not sit or lean unnecessarily close to the SRS airbag. Because the SRS airbag deploys with considerable speed (faster than the blink of an eye) and force to protect the occupant in high speed collisions, the force of an airbag can injure an occupant whose body is too close to the

– CONTINUED –

SRS airbag.

It is also important to wear your seatbelt to help avoid injuries that can result when the SRS airbag contacts an occupant not in proper position such as one thrown forward during pre-accident braking.

Even when properly positioned, there remains a possibility that an occupant may suffer minor injuries such as abrasions and bruises to the face or arms because of the SRS airbag deployment force.



⚠ WARNING

- Do not rest your arm on either front door or its internal trim. You could be injured in the event of SRS side airbag deployment.
- Do not place any objects over or near the SRS airbag cover or between you and the SRS airbag. If the SRS airbag deploys, those objects could interfere with its proper operation and could be propelled inside the vehicle and cause injury.

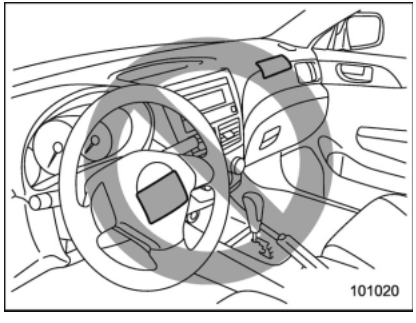

⚠ WARNING

Do not put any objects over the steering wheel pad and dashboard. If the SRS frontal airbag deploys, these objects could interfere with its proper operation and could be propelled inside the vehicle, causing injury.

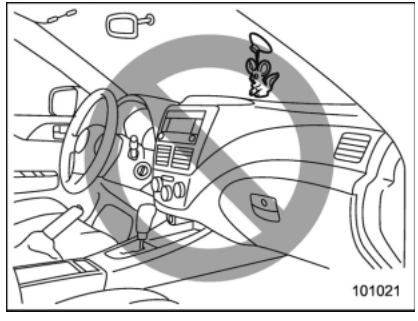

⚠ WARNING

Do not attach accessories to the windshield, or fit an extra-wide mirror over the rear view mirror. If the SRS airbag deploys, those objects could become projectiles that could seriously injure vehicle occupants.

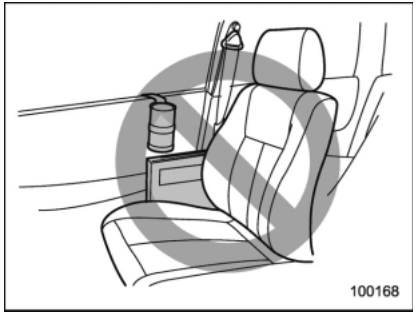

⚠ WARNING

- **Do not attach accessories to the door trim or near either SRS side airbags and do not place objects near the SRS side airbags. In the event of SRS side airbag deployment, they could be propelled dangerously toward the vehicle's occupants and cause injuries.**
- **Do not attach a hands-free microphone or any other accessory to a front pillar, a center pillar, a rear pillar, the windshield, a side window, an assist grip, or any other cabin surface that would be near a deploying SRS curtain airbag. A hands-free microphone or other accessory in such a location could be propelled through the cabin with great force by the curtain airbag, or it could prevent correct deployment of the curtain airbag. In either case, the result could be serious injuries.**
- **Never hang or place coat hangers or other hard or pointed objects near the side windows. If such items are present when the SRS curtain airbags deploy, they could be thrown through the passenger compartment and cause serious injuries. They could also prevent proper operation of the SRS curtain airbags.**

  Before hanging clothing on the coat hooks, make sure there are no sharp objects in the pockets. Hang clothing directly on the coat hooks without using hangers.

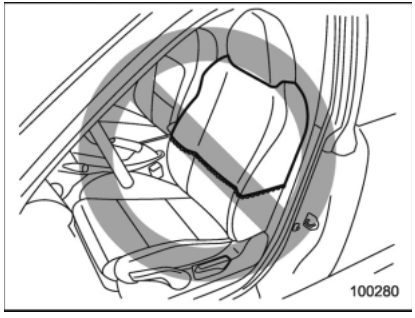

⚠ WARNING

Do not put any kind of cover or clothes or other objects over either front seatback and do not attach labels or stickers to the front seat surface on or near the SRS side airbag. They could prevent proper deployment of the SRS side airbag, reducing protection available to the front seat's occupant.

– CONTINUED –

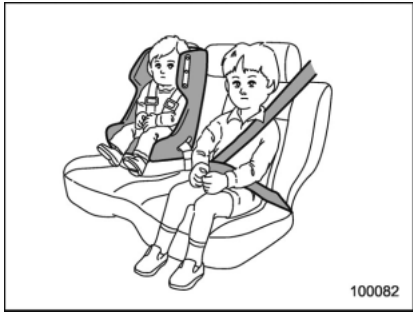

⚠ WARNING

Put children aged 12 and under in the rear seat properly restrained at all times. The SRS airbag deploys with considerable speed and force and can injure or even kill children, especially if they are 12 years of age and under and are not restrained or improperly restrained. Because children are lighter and weaker than adults, their risk of being injured from deployment is greater.

For that reason, we strongly recommend that ALL children (including those in child seats and those that have outgrown child restraint devices) sit in the REAR seat properly restrained at all times in a child restraint device or in a seatbelt, whichever is appropriate for the child's age, height and weight.

Secure ALL types of child restraint devices (including forward facing child seats) in the REAR seats at all times.

According to accident statistics, children are safer when properly restrained in the rear seating positions than in the front seating positions.

For instructions and precautions concerning the child restraint system, refer to "Child restraint systems" ☞1-21.

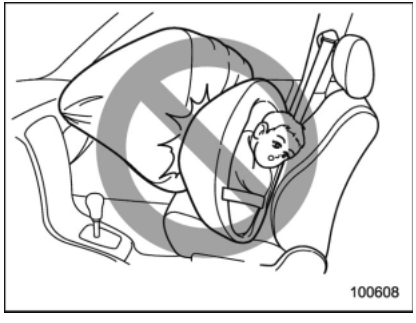

⚠ WARNING

NEVER INSTALL A REARWARD FACING CHILD SEAT IN THE FRONT SEAT. DOING SO RISKS SERIOUS INJURY OR DEATH TO THE CHILD BY PLACING THE CHILD'S HEAD TOO CLOSE TO THE SRS AIRBAG.

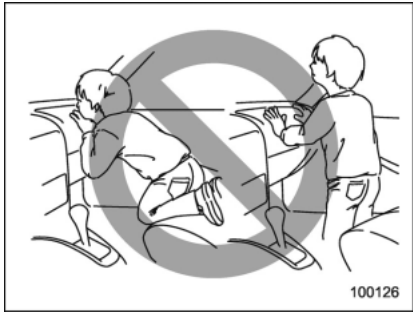

⚠ WARNING

Never allow a child to stand up or kneel on the front passenger's seat. The SRS airbag deploys with considerable force and can injure or even kill the child.

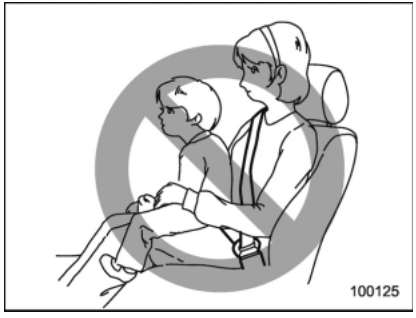

⚠ WARNING

Never hold a child on your lap or in your arms. The SRS airbag deploys with considerable force and can injure or even kill the child.

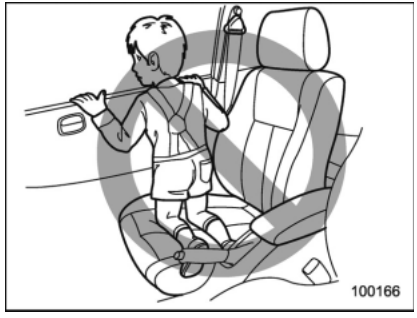

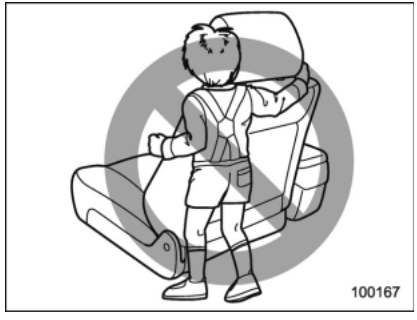

⚠ WARNING

- **Never allow a child to do the following.**
  - **– Kneel on any passenger's seat facing the side window**
  - **– Wrap his/her arms around the front seat seatback**
  - **– Put his/her head, arms or other parts of the body out of the window**

  In the event of an accident, the force of SRS side airbag and/or SRS curtain airbag deployment could injure the child seriously because his/her head, arms or other parts of the body are too close to the SRS side airbag and/or SRS curtain airbag.
- **Since your vehicle is also equipped with a front passenger's SRS frontal airbag, children aged 12 and under should be placed in the rear seat anyway and should be properly restrained at all times.**

– CONTINUED –

⚠ CAUTION

- **When the SRS airbag deploys, some smoke will be released. This smoke could cause breathing problems for people with a history of asthma or other breathing trouble. If you or your passengers have breathing problems after SRS airbag deploys, get fresh air promptly.**
- **A deploying SRS airbag releases hot gas. Occupants could get burned if they come into direct contact with the hot gas.**

NOTE

When you sell your vehicle, we urge you to explain to the buyer that it is equipped with SRS airbags by alerting the buyer to the applicable section in this Owner's Manual.

■ Components

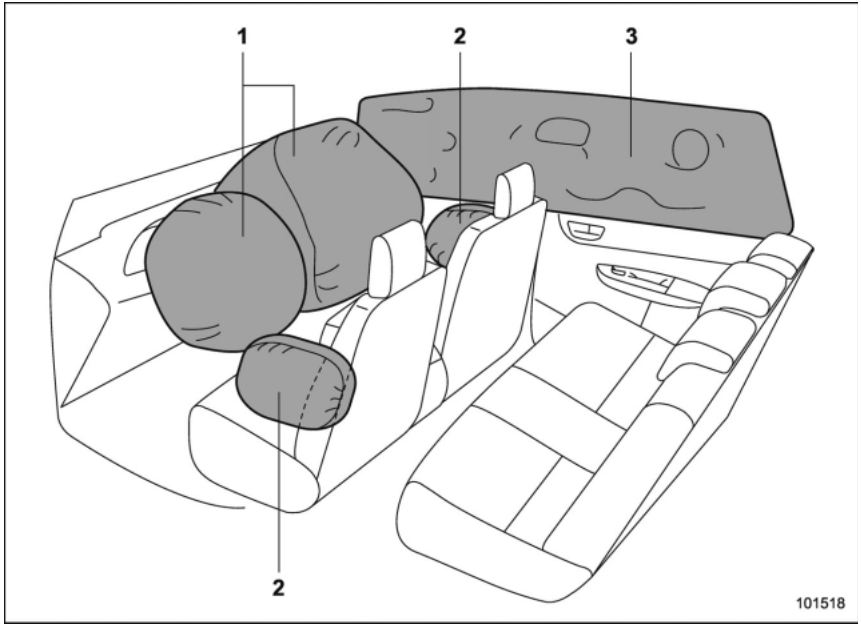

1) SRS frontal airbag
2) SRS side airbag
3) SRS curtain airbag

The SRS airbags are stowed in the following locations.

Driver's SRS frontal airbag: in the center portion of the steering wheel

Front passenger's SRS frontal airbag: near the top of the dashboard under an "SRS AIRBAG" mark

SRS side airbag: in the door side of each front seat seatback which bears an "SRS AIRBAG" label

SRS curtain airbag: in the roof side (between the front pillar and a point over the rear seat)
An "SRS AIRBAG" mark is located at the top of each center pillar.

– CONTINUED –

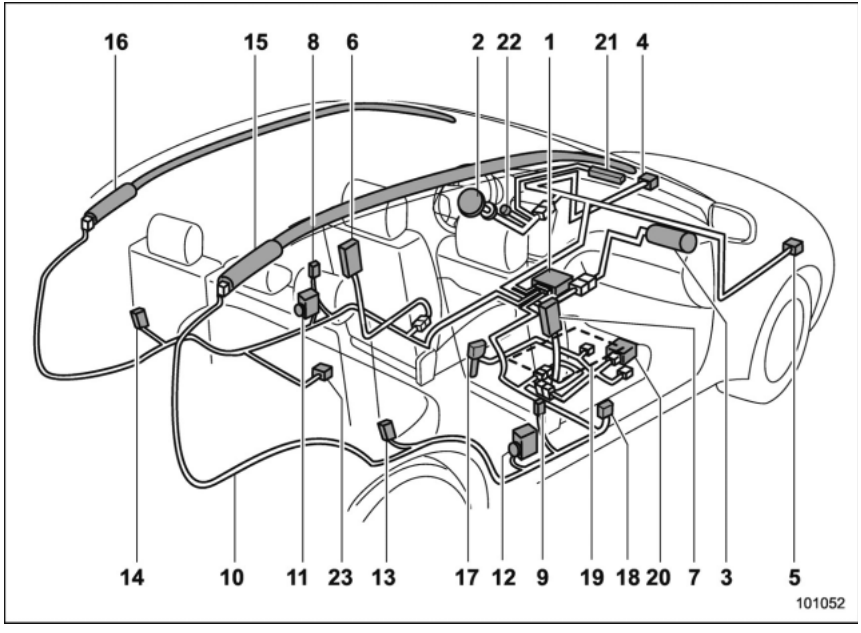

1) Airbag control module (including impact sensors)
2) Frontal airbag module (driver's side)
3) Frontal airbag module (front passenger's side)
4) Front sub sensor (left-hand side)
5) Front sub sensor (right-hand side)
6) Side airbag module (driver's side)
7) Side airbag module (front passenger's side)
8) Side airbag sensor (center pillar left-hand side)
9) Side airbag sensor (center pillar right-hand side)
10) Airbag wiring
11) Seatbelt pretensioner (driver's side)
12) Seatbelt pretensioner (front passenger's side)
13) Curtain airbag sensor (rear wheel house right-hand side)
14) Curtain airbag sensor (rear wheel house left-hand side)
15) Curtain airbag module (right side)
16) Curtain airbag module (left side)
17) Seatbelt buckle switch (front passenger's side)
18) Front passenger's seatbelt tension sensor
19) Front passenger's occupant detection system weight sensor
20) Front passenger's occupant detection control module
21) Front passenger's frontal airbag ON and OFF indicator
22) SRS airbag system warning light
23) Satellite safing sensor (under the rear center seat)

■ SUBARU advanced frontal airbag system, SRS side airbag and SRS curtain airbag

Your vehicle is equipped with a SUBARU advanced frontal airbag system that complies with the new advanced frontal airbag requirements in the amended Federal Motor Vehicle Safety Standard (FMVSS) No. 208.

The SUBARU advanced frontal airbag system automatically determines the deployment force of the driver's SRS frontal airbag at the time of deployment as well as whether or not to activate the front passenger's SRS frontal airbag and, if activated, the deployment force of the SRS frontal airbag at the time of deployment.

Your vehicle has warning labels on the driver's and front passenger's sun visors beginning with the phrase "EVEN WITH ADVANCED AIR BAGS" and a tag attached to the glove box lid beginning with the phrase "Even with Advanced Air Bags". Make sure that you carefully read the instructions on the warning labels and tag.

Always wear your seatbelt. The SUBARU advanced frontal airbag system is a supplemental restraint system and must be used in combination with a seatbelt. All occupants should wear a seatbelt or be seated in an appropriate child restraint system.

For the locations of the driver's SRS frontal airbag, front passenger's SRS frontal airbag, SRS side airbag and SRS curtain airbag, refer to "Components" ☞1-41.

In a moderate to severe frontal collision, the driver's and front passenger's SRS frontal airbags deploy and supplement the seatbelts by reducing the impact on the driver's and front passenger's head and chest.

In a moderate to severe side impact collision, the SRS side airbag on the impacted side of the vehicle deploys between the occupant and the door panel and supplements the seatbelt by reducing the impact on the occupant's chest and waist.

In a moderate to severe side impact collision, the SRS curtain airbag on the impacted side of the vehicle deploys between the occupant and the side window and supplements the seatbelt by reducing the impact on the occupant's head.

NOTE

The SRS side airbag, SRS curtain airbag and seatbelt pretensioner are not controlled by the SUBARU advanced frontal airbag system.

▼ Driver's SRS frontal airbag

The driver's SRS frontal airbag uses a dual stage inflator. The inflator operates in different ways depending on the severity of impact.

Have the system inspected by your SUBARU dealer immediately if the SRS airbag system warning light illuminates.

▼ Front passenger's SRS frontal airbag

The front passenger's SRS frontal airbag uses a dual stage inflator. The inflator operates in different ways depending on the severity of impact.

The total load on the seat is monitored by the occupant detection system's weight sensor located under the seat.

The system has another sensor that monitors the tension of the front passenger seatbelt. Using the total seat load and seatbelt tension data from the sensors, the occupant detection system determines whether the front passenger's SRS frontal airbag should or should not be inflated.

The occupant detection system may not inflate the front passenger's SRS frontal airbag even when the driver's SRS frontal airbag deploys. This is normal.

– CONTINUED –

⚠ CAUTION

Observe the following precautions. Failure to do so may prevent the SUBARU advanced frontal airbag system from functioning correctly or cause the system to fail.

- **Do not apply any strong impact to the front passenger's seat such as by kicking.**
- **Do not spill liquid on the front passenger's seat. If liquid is spilled, wipe it off immediately.**
- **Do not remove or disassemble the front passenger's seat.**
- **Do not install any accessory (such as an audio amplifier) other than a genuine SUBARU accessory under the front passenger's seat.**
- **Do not place anything (shoes, umbrella, etc.) under the front passenger's seat.**
- **The front passenger's seat must not be used with the head restraint removed.**
- **Do not leave any article including a child restraint system on the front passenger's seat or the seatbelt tongue and buckle engaged when you leave your vehicle.**
- **Do not place a magnet near the seatbelt buckle and the seatbelt retractor.**
- **Do not use front seats with their backward-forward position and seatback not being locked into place securely. If any of them are not locked securely, adjust them again. For adjusting procedure, refer to "Front seats" ☞1-2.**

If the seatbelt buckle switch and/or front passenger's occupant detection system have failed, the SRS airbag system warning light will illuminate. Have the system inspected by your SUBARU dealer immediately if the SRS airbag system warning light illuminates.

If your vehicle has sustained impact, this may affect the proper function of the SUBARU advanced frontal airbag system. Have your vehicle inspected at your SUBARU dealer.

▼ Passenger's frontal airbag ON and OFF indicators

Refer to "Front passenger's frontal airbag ON and OFF indicators" ☞3-14.

▼ Conditions in which front passenger's SRS frontal airbag is not activated

The front passenger's SRS frontal airbag will not be activated when any of the following conditions are met regarding the front passenger's seat:

- The seat is empty.
- The seat is equipped with a rearward facing child restraint system and an infant is restrained with it. (See WARNING that follows.)
- The seat is equipped with a forward facing child restraint system and a small child is restrained with it. (See WARNING that follows.)
- The seat is equipped with a booster seat and a small child is in the booster seat. (See WARNING that follows.)
- The seat is relieved of the occupant load for a time exceeding the predetermined monitoring time period.
- The seat is occupied by a child who has outgrown a child restraint system (See WARNING that follows.) or by a small adult.
- The front passenger's occupant detection system is malfunctioning.

⚠ WARNING

NEVER INSTALL A REARWARD FACING CHILD SEAT IN THE FRONT PASSENGER'S SEAT EVEN IF THE FRONT PASSENGER'S SRS FRONTAL AIRBAG IS DEACTIVATED. Be sure to install it in the REAR seat in a correct manner. Also, it is strongly recommended that any forward facing child seat or booster seat be installed in the REAR seat, and that even children who have outgrown a child restraint system be also seated in the REAR seat. This is because children sitting in the front passenger's seat may be killed or severely injured should the front passenger's SRS frontal airbag deploy. REAR seats are the safest place for children.

⚠ CAUTION

When the front passenger's seat is occupied by a child, observe the following precautions. Failure to do so may increase the load on the front passenger's seat, activating the front passenger's SRS frontal airbag even though that seat is occupied by a child.

- **Do not place any article on the seat other than the child occupant and a child restraint system.**
- **Do not place more than one child on the seat.**
- **Do not install any accessory such as a table or TV onto the seatback.**
- **Do not store a heavy load in the seatback pocket.**
- **Do not allow the rear seat occupant to place his/her hands or legs on the front passenger's seatback, or allow him/her to pull the seatback.**

▽ **If the front passenger's frontal airbag ON indicator illuminates and the OFF indicator turns off even when an infant or a small child is in a child restraint system (including booster seat)**

1. Turn the ignition switch to the "LOCK" position.
2. Remove the child restraint system from the seat.
3. By referring to the child restraint manufacturer's recommendations as well as the child restraint system installation procedures in "Child restraint systems" ☞1-21, correctly install the child restraint system.
4. Turn the ignition switch to the "ON" position and make sure that the front passenger's frontal airbag ON indicator turns off and the OFF indicator illuminates.

If still the ON indicator remains illuminated while the OFF indicator turns off, take the following actions.

- Ensure that no article is placed on the seat other than the child restraint system and the child occupant.
- Ensure that there is no article left in the seatback pocket.
- Ensure that the backward-forward position and seatback of front passenger's seat are locked into place securely by moving the seat back and forth.

If the ON indicator still remains illuminated while the OFF indicator turns off after taking relevant corrective actions described above, relocate the child restraint system to the rear seat and immediately contact your SUBARU dealer for an inspection.

NOTE

When a child who has outgrown a child restraint system or a small adult is seated in the front passenger's seat, the SUBARU advanced frontal airbag

– CONTINUED –

system may or may not activate the front passenger's SRS frontal airbag depending on the occupant's seating posture. If the front passenger's SRS frontal airbag is activated (the ON indicator remains illuminated while the OFF indicator turns off), take the following actions.

- **Ensure that no article is placed on the seat other than the occupant.**
- **Ensure that there is no article left in the seatback pocket.**

If the ON indicator still remains illuminated while the OFF indicator turns off despite the fact that the actions noted above have been taken, seat the child/small adult in the rear seat and immediately contact your SUBARU dealer for an inspection. Even if the system has passed the dealer inspection, it is recommended that on subsequent trips the child/small adult always take the rear seat.

Children who have outgrown a child restraint system should always wear the seatbelt irrespective of whether the airbag is deactivated or activated.

▼ Conditions in which front passenger's SRS frontal airbag is activated

The front passenger's SRS frontal airbag will be activated for deployment upon impact when any of the following conditions are met regarding the front passenger's seat.

- When the seat is occupied by an adult.
- When a heavy article is placed on the seat.

⚠ CAUTION

When the front passenger's seat is occupied by an adult, observe the following precautions. Failure to do so may lessen the load on the front passenger's seat, deactivating the front passenger's SRS frontal airbag despite the fact that the seat is occupied by an adult. This could result in personal injury.

- **Do not allow the rear seat occupant to lift the front passenger's seat cushion using his/her feet.**
- **Do not place any article under the front passenger's seat, or squeeze any article from behind and under the seat. This may lift the seat cushion.**
- **Do not squeeze any article between the front passenger's seat and side trim/pillar, door or center console box. This may lift the seat cushion.**

▽ If the passenger's frontal airbag OFF indicator illuminates and the ON indicator turns off even when the front passenger's seat is occupied by an adult

This can be caused by the adult incorrectly sitting in the front passenger's seat.

1. Turn the ignition switch to the "LOCK" position.
2. Ask the front passenger to set the seatback to the upright position, sit up straight in the center of the seat cushion, correctly fasten the seatbelt, position his/her legs out forward, and adjust the seat to the rearmost position.
3. Turn the ignition switch to the "ON" position.

If the OFF indicator remains illuminated while the ON indicator remains off, take the following actions.

1. Turn the ignition switch to the "LOCK" position.
2. Ensure that there are no articles, books, shoes, or other objects trapped under the seat, at the rear of the seat, or on the side of the seat.

3. Ensure that the backward-forward position and seatback of front passenger's seat are locked into place securely by moving the seat back and forth.
4. Turn the ignition switch to the "ON" position and wait 6 seconds to allow the system to complete self-checking. Following the system check, both indicators turn off for 2 seconds. Now, the ON indicator should illuminate while the OFF indicator remains off.

If the OFF indicator still remains illuminated while the ON indicator remains off, ask the occupant to move to the rear seat and immediately contact your SUBARU dealer for an inspection.

▼ **How to contact the vehicle manufacturer concerning modifications for persons with disabilities that may affect the advanced airbag system (U.S. only)**

Changing or moving any parts of the front seats, rear seat, seatbelts, front bumper, front side frame, radiator panel, instrument panel, combination meter, steering wheel, steering column, tire, suspension or floor panel can affect the operation of the SUBARU advanced airbag system. If you have any questions, you may contact the following SUBARU distributors.

<Continental U.S., Alaska and the District of Columbia>
Subaru of America, Inc.
Customer Dealer Services Department
P.O. Box 6000
Cherry Hill, NJ 08034-6000
1-800-SUBARU3 (1-800-782-2783)

<Hawaii>
Servco Subaru Inc., dba Subaru Hawaii
2850 Pukoloa Street, Suite 202, Honolulu, HI 96819
808-839-2273

<Guam>
Shen's Corporation dba Prestige Automobile
491, East Marine Drive, Route 1 Dededo, Guam
671-633-2698

<Puerto Rico>
Trebol Motors
P.O. Box 11204, San Juan, Puerto Rico 00910
787-793-2828

There are currently no SUBARU distributors in any other U.S. territories. If you are in such an area, please contact the SUBARU distributor or dealer from which you bought your vehicle.

■ System operation

⚠ CAUTION

Do not touch the SRS airbag system components with bare hands right after deployment. Doing so can cause burns because the components can be very hot as a result of deployment.

The SRS airbags can function only when the ignition switch is in the "ON" position.

When the SRS airbag(s) deploy(s), a sudden, fairly loud inflation noise will be heard and some smoke will be released. These occurrences are a normal result of the deployment. This smoke does not indicate a fire in the vehicle.

– CONTINUED –

▼ SRS frontal airbag operation

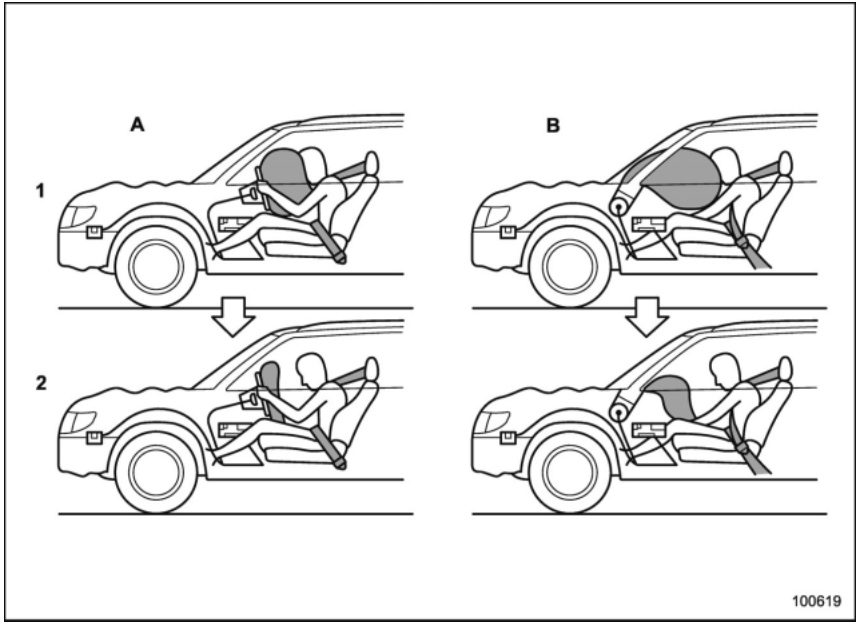

A) Driver's side
B) Passenger's side
1) SRS AIRBAGs deploy as soon as a collision occurs.
2) After deployment, SRS AIRBAGs start to deflate immediately so that the driver's vision is not obstructed.

The SUBARU advanced frontal airbag system is designed to determine the activation or deactivation condition of the front passenger's SRS frontal airbag depending on the total load on the front passenger's seat monitored by the front passenger's occupant detection system weight sensor. For this reason, only the driver's SRS frontal airbag may deploy in the event of a collision, but this does not mean failure of the system.

If the front sub sensors and the impact sensors in the airbag control module detect a predetermined amount of force during a frontal collision, the control module sends signals to the airbag module(s) (only driver's module or both driver's and front passenger's modules) instructing the module(s) to inflate the SRS frontal airbag(s). The driver's and front passenger's SRS frontal airbags use dual stage inflators.

The two inflators of each airbag are triggered either sequentially or simultaneously, depending on the severity of impact, in the case of the driver's SRS frontal airbag and depending on the severity of impact and the total load on the seat in the case of the front passenger's SRS frontal airbag.

After deployment, the SRS airbag immediately starts to deflate so that the driver's vision is not obstructed and the driver's ability to maintain control of the vehicle is not impaired. The time required from detecting impact to the deflation of the SRS airbag after deployment is shorter than the blink of an eye.

Both when only the driver's SRS frontal airbag deploys and the driver's and front passenger's SRS frontal airbags deploy, the driver's and front passenger's seatbelt pretensioners operate at the same time.

The driver's SRS frontal airbag and front passenger's SRS frontal airbag are designed to deploy in the event of an accident involving a moderate to severe frontal collision. They are not designed to deploy in most lesser frontal impacts because the necessary protection can be achieved by the seatbelt alone. Also, they are not designed to deploy in most side or rear impacts or in most roll-over accidents because deployment of only the driver's SRS frontal airbag or both driver's and front passenger's SRS frontal airbags would not help the occupant in those situations. The driver's and front passenger's SRS frontal airbags are designed to function on a one-time-only basis.

SRS airbag deployment depends on the level of force experienced in the passenger compartment during a collision. That level differs from one type of collision to another, and it may have no bearing on the visible damage done to the vehicle itself.

▽ Example of accident in which the driver's/driver's and front passenger's SRS frontal airbag(s) will most likely deploy

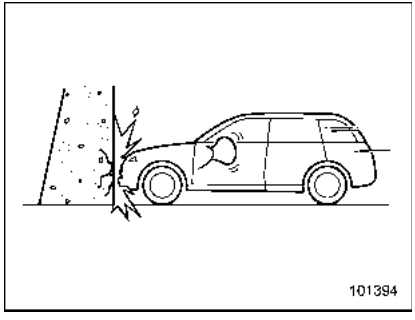

A head-on collision against a thick concrete wall at a vehicle speed of 12 to 19 mph (20 to 30 km/h) or higher activates only the driver's SRS frontal airbag or both driver's and front passenger's SRS frontal airbags. The airbag(s) will also be activated when the vehicle is exposed to a frontal impact similar in fashion and magnitude to the collision described above.

– CONTINUED –

▽ **Examples of the types of accidents in which it is possible that the driver's/driver's and front passenger's SRS frontal airbag(s) will deploy**

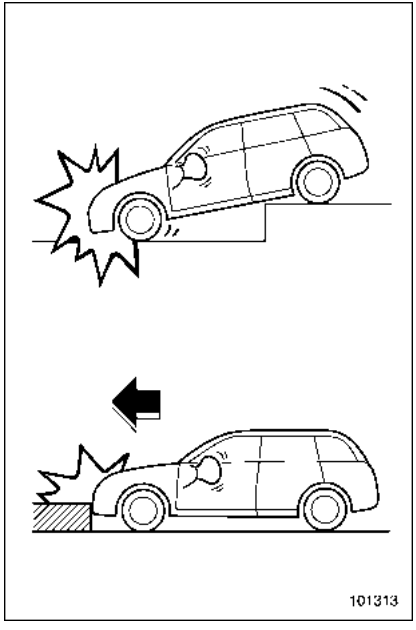

Only the driver's SRS frontal airbag or both driver's and front passenger's SRS frontal airbags may be activated when the vehicle sustains a hard impact in the undercarriage area from the road surface (such as when the vehicle plunges into a deep ditch, is severely impacted or knocked hard against an obstacle on the road such as a curb).

▽ **Examples of the types of accidents in which deployment of the driver's/driver's and front passenger's SRS frontal airbag(s) is unlikely to occur**

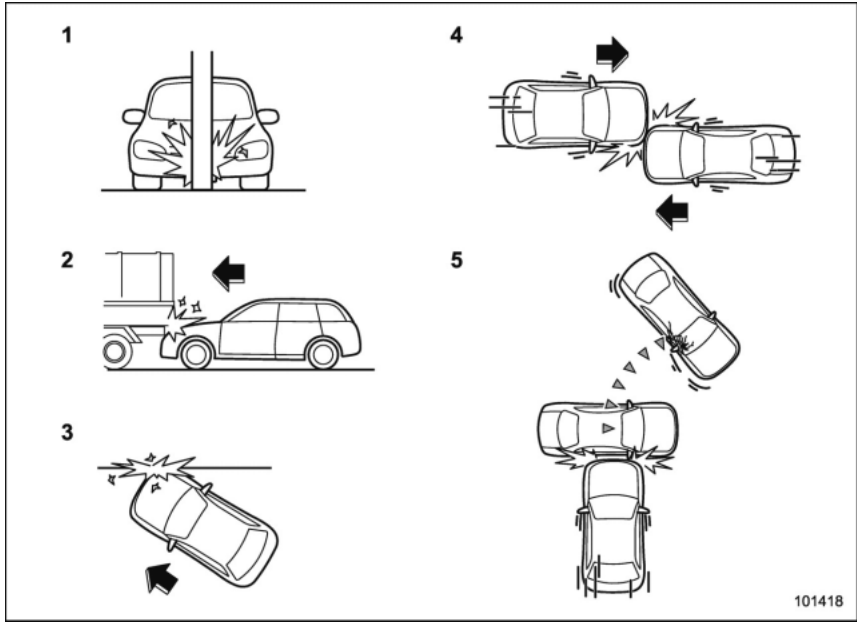

1) The vehicle strikes an object, such as a telephone pole or sign pole.
2) The vehicle slides under the load bed of a truck.
3) The vehicle sustains an oblique offset frontal impact.
4) The vehicle sustains an offset frontal collision.
5) The vehicle strikes an object that can move or deform, such as a parked vehicle.

There are many types of collisions which might not necessarily require deployment of driver's/driver's and front passenger's SRS frontal airbag(s). In the event of accidents like those illustrated, the driver's/driver's and front passenger's SRS frontal airbag(s) may not deploy depending on the level of accident forces involved.

– CONTINUED –

▽ **Examples of the types of accidents in which the driver's/driver's and front passenger's SRS frontal airbag(s) is/are not designed to deploy in most cases**

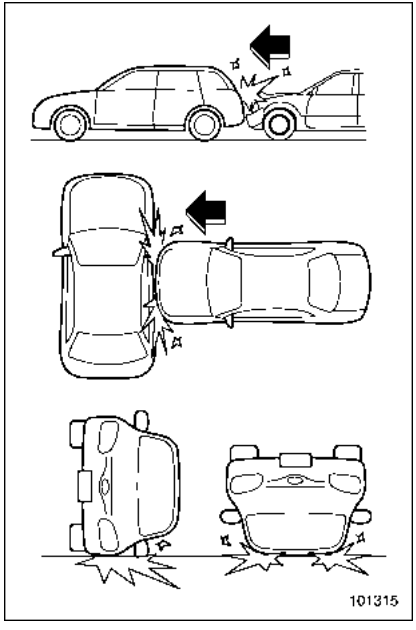

The driver's and front passenger's SRS frontal airbags are designed not to deploy in most cases if the vehicle is struck from the side or from behind, or if it rolls onto its side or roof, or if it is involved in a low-speed frontal collision.

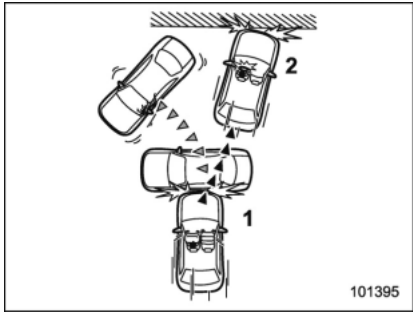

1) First impact
2) Second impact

In an accident where the vehicle is impacted more than once, the driver's and/or front passenger's SRS frontal airbag(s) will deploy only once on the first impact.

Example: In the case of a double collision, first with another vehicle, then against a concrete wall in immediate succession, once either or both of the driver's and front passenger's SRS frontal airbags is/are activated on the first impact, it/they will not be activated on the second impact.

▼ **SRS side airbag and SRS curtain airbag operation**



The driver's and front passenger's SRS side airbags and SRS curtain airbags deploy independently of each other since each has its own impact sensor. Therefore, they may not both deploy in the same accident. Also, the SRS side airbag and SRS curtain airbag deploys independently of the driver's and front passenger's SRS frontal airbags in the steering wheel and instrument panel.

An impact sensor which senses impact force is located in the following locations.

- In each of the left and right center pillars
- In each of the rear wheel houses

- Under the rear center seat

The airbag control module causes both the **SRS side airbag** and **SRS curtain airbag** on the impacted side to inflate if both of the following sensors together sense an impact force above a predetermined level in a side collision.

- One of the center pillar impact sensors
- Impact sensor that is located under the rear center seat

The airbag control module causes only the **SRS curtain airbag** on the impacted side to inflate if both of the following sensors together sense an impact force above a predetermined level in a side collision.

- One of the rear wheel house impact sensors
- Impact sensor that is located under the rear center seat

After the deployment, the SRS side airbag immediately starts to deflate. The time required from detection of an impact to deflation of an SRS side airbag after deployment is shorter than the blink of an eye.

The SRS curtain airbag remains inflated for a while following deployment then slowly deflates.

The SRS side airbag and SRS curtain airbag deploy even when no one occupies the seat on the side on which an impact is applied.

The SRS side airbag and SRS curtain airbag are designed to deploy in the event of an accident involving a moderate to severe side impact collision. They are not designed to deploy in most lesser side impacts. Also, they are not designed to deploy in most frontal or most rear impacts because SRS side airbag and SRS curtain airbag deployment would not help the occupant in those situations.

Each SRS side airbag and SRS curtain airbag are designed to function on a one-time-only basis.

SRS side airbag and SRS curtain airbag deployment depend on the level of force experienced in the passenger compartment during a side impact collision. That level differs from one type of collision to another, and it may have no bearing on the visible damage done to the vehicle itself.

▽ **Example of the type of accident in which the SRS side airbag and SRS curtain airbag will most likely deploy**

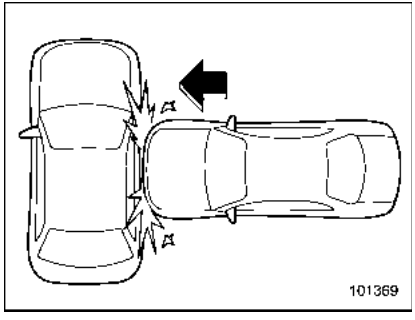

A severe side impact near the front seat activates the SRS side airbag and SRS curtain airbag.

– CONTINUED –

▽ **Examples of the types of accidents in which the SRS side airbag and SRS curtain airbag are unlikely to deploy**

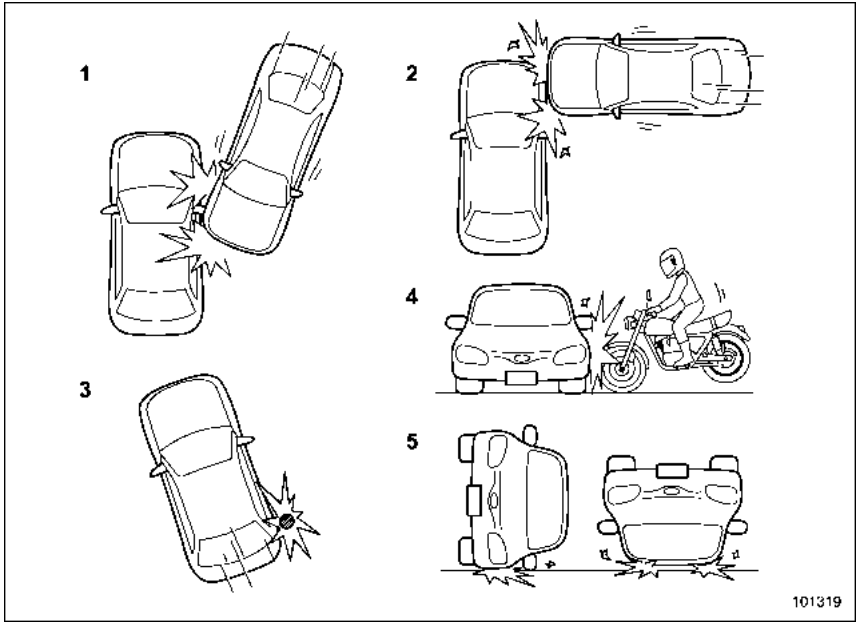

1) The vehicle is involved in an oblique side-on impact.
2) The vehicle is involved in a side-on impact in an area outside the vicinity of the passenger compartment.
3) The vehicle strikes a telephone pole or similar object.
4) The vehicle is involved in a side-on impact from a motorcycle.
5) The vehicle rolls onto its side or roof.

There are many types of collisions which might not necessarily require SRS side airbag and SRS curtain airbag deployment. In the event of accidents like those illustrated, the SRS side airbag and SRS curtain airbag may not deploy depending on the level of accident forces involved.

▽ **Examples of the types of accidents in which the SRS side airbag and SRS curtain airbag are not designed to deploy in most cases**

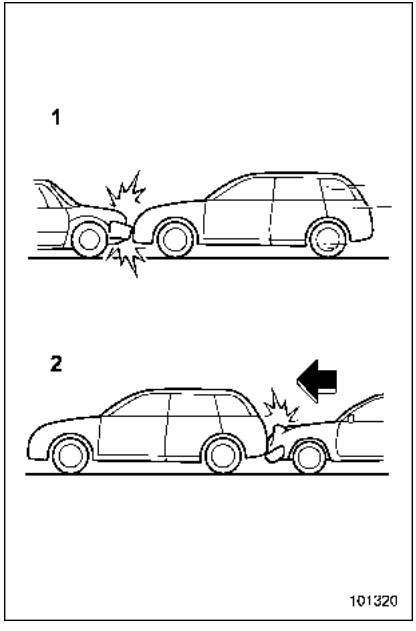

1) The vehicle is involved in frontal collision with another vehicle (moving or stationary).
2) The vehicle is struck from behind.

The SRS side airbag and SRS curtain airbag are not designed to deploy in most cases if the vehicle is involved in a frontal collision or is struck from behind. Examples of such accidents are illustrated.

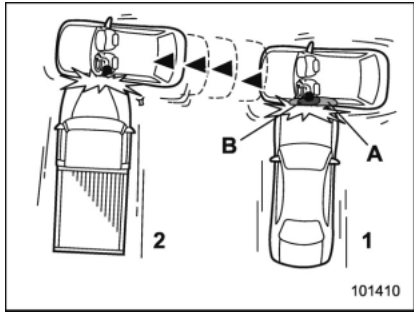

1) First impact
2) Second impact
A) SRS curtain airbag
B) SRS side airbag

In an accident where the vehicle is struck from the side more than once, the SRS side airbag and SRS curtain airbag deploy only once on the first impact.

Example: In the case of a double side impact collision, first with one vehicle and immediately followed by another from the same direction, once the SRS side airbag and SRS curtain airbag are activated on the first impact, they will not be activated on the second.

■ SRS airbag system monitors

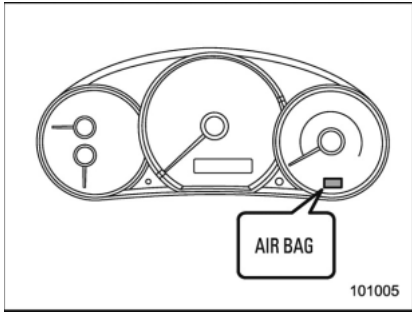

SRS airbag system warning light

A diagnostic system continually monitors the readiness of the SRS airbag system (including front seatbelt pretensioners) while the vehicle is being driven. The SRS airbag system warning light “AIRBAG” will show normal system operation by lighting for approximately 6 seconds when the ignition switch is turned to the “ON” position.

– CONTINUED –

The following components are monitored by the indicator:

- Front sub sensor
  - Right-hand side
  - Left-hand side
- Airbag control module (including impact sensors)
- Frontal airbag module
  - Driver's side
  - Front passenger's side
- Side airbag sensor
  - Center pillar right-hand side
  - Center pillar left-hand side
- Side airbag module
  - Driver's side
  - Front passenger's side
- Curtain airbag sensor
  - Rear wheel house right-hand side
  - Rear wheel house left-hand side
- Curtain airbag module
  - Right-hand side
  - Left-hand side
- Satellite safing sensor (under the rear center seat)
- Seatbelt pretensioner
  - Driver's side
  - Front passenger's side
- Seatbelt buckle switch (front passenger's side)
- Front passenger's seatbelt tension sensor
- Front passenger's occupant detection system weight sensor
- Front passenger's occupant detection control module
- Front passenger's frontal airbag ON and OFF indicator
- All related wiring

⚠ WARNING

If the warning light exhibits any of the following conditions, there may be a malfunction in the seatbelt pretensioners and/or SRS airbag system. Immediately take your vehicle to your nearest SUBARU dealer to have the system checked. Unless checked and properly repaired, the seatbelt pretensioners and/or SRS airbag will not operate properly in the event of a collision, which may increase the risk of injury.

- **Flashing or flickering of the warning light**
- **No illumination of the warning light when the ignition switch is first turned to the "ON" position**
- **Continuous illumination of the warning light**
- **Illumination of the warning light while driving**

■ SRS airbag system servicing

⚠ WARNING

- **When discarding an airbag module or scrapping the entire vehicle damaged by a collision, consult your SUBARU dealer.**
- **The SRS airbag has no user-serviceable parts. Do not use electrical test equipment on any circuit related to the SRS airbag system. For required servicing of the SRS airbag, consult your nearest SUBARU dealer. Tampering with or disconnecting the system's wiring could result in accidental inflation of the SRS airbag or could make the system inoperative, which may result in serious injury.**

⚠ CAUTION

If you need service or repair in areas indicated in the following list, have the work performed by an authorized SUBARU dealer. The SRS air-

bag control module, impact sensors and airbag modules are stored in these areas.

- Under the center console
- On both the right and left sides at the front of the vehicle
- Steering wheel and column and nearby areas
- Top of the dashboard on front passenger's side and nearby areas
- Each front seat and nearby area
- Inside each center pillar
- In each roof side (from the front pillar to a point over the rear seat)
- Between the rear seat cushion and rear wheel house on each side
- Under the rear center seat

In the event that the SRS airbag is deployed, replacement of the system should be performed only by an authorized SUBARU dealer. When the components of the SRS airbag system are replaced, use only genuine SUBARU parts.

NOTE

In the following cases, contact your SUBARU dealer as soon as possible.

- The front part of the vehicle was involved in an accident in which only the driver's SRS frontal airbag or both driver's and front passenger's SRS frontal airbags did not deploy.
- The pad of the steering wheel, the cover over the front passenger's SRS frontal airbag, or either roof side (from the front pillar to a point over the rear seat) is scratched, cracked, or otherwise damaged.
- Center pillar, rear wheel house or rear sub frame, or an area near these parts, was involved in an accident in which the SRS side airbag and SRS curtain airbag did not deploy.
- The fabric or leather of either front seatback is cut, frayed, or otherwise damaged.
- The rear part of the vehicle was involved in an accident in which no SRS airbag was deployed.

■ Precautions against vehicle modification

⚠ WARNING

To avoid accidental activation of the system or rendering the system inoperative, which may result in serious injury, no modifications should be made to any components or wiring of the SRS airbag system.

This includes following modifications.

- Installation of custom steering wheels
- Attachment of additional trim materials to the dashboard
- Installation of custom seats
- Replacement of seat fabric or leather
- Installation of additional fabric or leather on the front seat
- Attachment of a hands-free microphone or any other accessory to a front pillar, a center pillar, a rear pillar, the windshield, a side window, an assist grip, or any other cabin surface that would be near a deploying SRS curtain airbag.

– CONTINUED –

- **Installation of additional electrical/electronic equipment such as a mobile two-way radio on or near the SRS airbag system components and/or wiring is not advisable. This could interfere with proper operation of the SRS airbag system.**

⚠ CAUTION

Do not perform any of the following modifications. Such modifications can interfere with proper operation of the SRS airbag system.

- **Attachment of any equipment (bush bar, winches, snow plow, skid plate, etc.) other than genuine SUBARU accessory parts to the front end.**
- **Modification of the suspension system or front end structure.**
- **Installation of a tire of different size and construction from the tires specified on the vehicle placard attached to the driver's door pillar or specified for individual vehicle models in this Owner's Manual.**
- **Attachment of any equipment (side steps or side sill protectors, etc.) other than genuine SUBARU accessory parts to the side body.**

Always consult your SUBARU dealer if you want to install any accessory parts on your vehicle.

Keys 2-2
- Key number plate 2-2

Immobilizer 2-2
- Security ID plate 2-3
- Security indicator light 2-3
- Key replacement 2-3

Door locks 2-4
- Locking and unlocking from the outside 2-4
- Locking and unlocking from the inside 2-5
- Battery drainage prevention function 2-5

Power door locking switches 2-6
- Key lock-in prevention function 2-7

Remote keyless entry system 2-7
- Locking the doors 2-9
- Unlocking the doors 2-9
- Opening the trunk lid/unlocking rear gate 2-9
- Vehicle finder function 2-10
- Sounding a panic alarm 2-10
- Selecting audible signal operation 2-10
- Replacing the battery 2-11
- Replacing lost transmitters 2-11

Alarm system 2-15
- System operation 2-15
- Activating and deactivating the alarm system 2-15
- If you have accidentally triggered the alarm system 2-16
- Arming the system 2-16
- Disarming the system 2-17
- Valet mode 2-17
- Passive arming 2-18
- Tripped sensor identification 2-19
- Shock sensors (dealer option) 2-19

Child safety locks 2-20

Windows 2-20
- Power windows 2-20

Trunk lid (4-door) 2-23
- To open and close the trunk lid from outside 2-23
- To open the trunk lid from inside 2-23
- To lock and unlock the trunk lid release lever 2-24
- Internal trunk lid release handle 2-24

Rear gate (5-door) 2-26

Moonroof (if equipped) 2-27
- Moonroof switches 2-28
- Sun shade 2-29

Keys

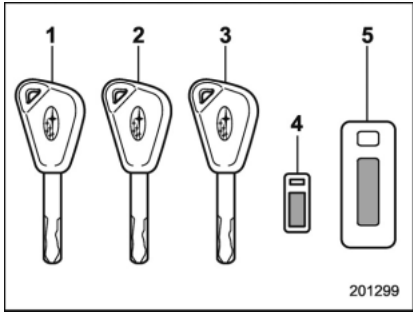

1) Master key (Black)
2) Submaster key (Black)
3) Valet key (Gray)
4) Key number plate
5) Security ID plate

Three types of keys are provided for your vehicle:

Master key, submaster key and valet key.

The master key and submaster key fit all locks on your vehicle.

- Ignition switch
- Driver's door
- Trunk lid release lever (4-door)
- Glove box

The valet key fits only the ignition switch and driver's door lock. You can keep the trunk and glove box locked when you leave your vehicle and valet key at a parking facility.

⚠ CAUTION

Do not attach a large key holder or key case to either key. If it bangs against your knees while you are driving, it could turn the ignition switch from the "ON" position to the "Acc" or "LOCK" position, thereby stopping the engine.

■ Key number plate

The key number is stamped on the key number plate attached to the key set. Write down the key number and keep it in another safe place, not in the vehicle. This number is needed to make a replacement key if you lose your key or lock it inside the vehicle. Refer to "Key replacement" ☞2-3.

Immobilizer

⚠ CAUTION

FCC WARNING

Changes or modifications not expressly approved by the party responsible for compliance could void the user's authority to operate the equipment.

The immobilizer system is designed to prevent an unauthorized person from starting the engine. Only keys registered with your vehicle's immobilizer system can be used to operate your vehicle. Even if an unregistered key fits into the ignition switch and can be turned to the "START" position, the engine will automatically stop after several seconds.

Each immobilizer key contains a transponder in which the key's ID code is stored. When a key is inserted into the ignition switch and turned to the "ON" position, the transponder transmits the key's ID code to the immobilizer system's receiver. If the transmitted ID code matches the ID code registered in the immobilizer system, the system allows the engine to be started. Since the ID code is transmitted and acted upon almost in-

stantly, the immobilizer system does not impede normal starting of the engine.

If the engine fails to start, pull out the key once before trying again. Refer to “Ignition switch” ☞3-3.

This device complies with Part 15 of the FCC Rules and RSS-Gen of IC Rules. Operation is subject to the following two conditions: (1) this device may not cause harmful interference, and (2) this device must accept any interference received, including interference that may cause undesired operation.

⚠ CAUTION

- **Do not place the key under direct sunlight or anywhere it may become hot.**
- **Do not get the key wet. If the key gets wet, wipe it dry with a cloth immediately.**
- **Do not modify or remove the immobilizer system. If modified or removed, the proper operation of the immobilizer system cannot be guaranteed.**

NOTE

- **To protect your vehicle from theft, please pay close attention to the following security precautions:**
  - **– Never leave your vehicle unattended with its keys inside.**
  - **– Before leaving your vehicle, close all windows and the moonroof, and lock the doors and rear gate.**
  - **– Do not leave spare keys or any record of your key number in the vehicle.**
- **The vehicle has a maintenance-free type immobilizer system.**

■ Security ID plate

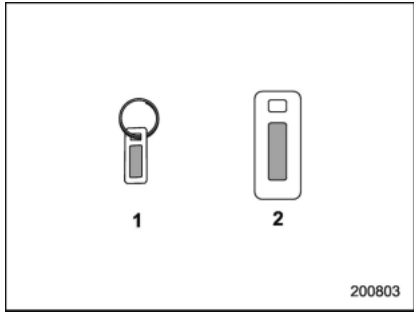

1) Key number plate
2) Security ID plate

The security ID is stamped on the security ID plate attached to the key set. Write down the security ID and keep it in another safe place, not in the vehicle. This number is needed to make a replacement key if you lose your key or lock it inside the vehicle.

This number is also needed for replacement or repair of the engine control unit, integrated unit, and combination meter.

■ Security indicator light



Refer to “Security indicator light” ☞3-23.

■ Key replacement

Your key number plate and security ID plate will be required if you ever need a replacement key made. Any new key must be registered for use with your vehicle’s immobilizer system before it can be used. Up to four keys can be registered for use with one vehicle.

For security, all the keys registered with your vehicle’s immobilizer system will have their ID codes erased and re-registered when a new key is made. Therefore, all of your vehicle’s keys must be presented when a new key is registered. Any key that is not re-registered when a new key is made cannot be used after the other keys are re-registered. For information on replacement keys and on

– CONTINUED –

the registration of keys with your immobilizer system, contact your SUBARU dealer.

NOTE

A vehicle that is equipped with the remote engine start system as a dealer option can register up to three keys for use with one vehicle.

Door locks

■ Locking and unlocking from the outside

NOTE

If you unlock the driver's door with a key and open the door while the alarm system is armed, the alarm system is triggered and the vehicle's horn sounds. In this case, perform any of the following operations:

- **Press any button on the remote transmitter.**
- **Insert the key into the ignition switch and turn the ignition switch to the "ON" position.**

For details about the alarm system, refer to "Alarm system" ☞2-15.

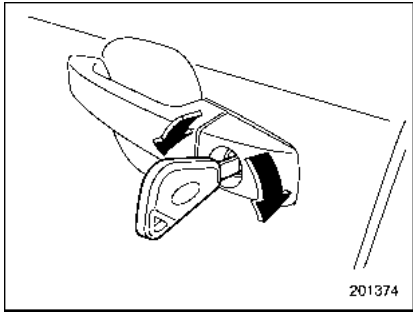

To lock the driver's door from the outside with the key, turn the key toward the rear. To unlock the door, turn the key toward the front. Pull the outside door handle to open an unlocked door.

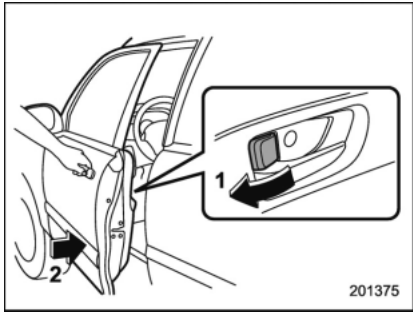

1) Rotate the lock lever rearward.
2) Close the door.

To lock the door from the outside without the key, rotate the lock lever rearward and then close the door.

To lock the door from the outside using the power door locking switch, push the front side of the switch (“LOCK” side) and then close the door. For details, refer to “Power door locking switches” ☞2-6. In this case, all closed doors and the rear gate (for 5-door) are locked at the same time.

Always make sure that all doors and the rear gate (for 5-door) are locked before leaving your vehicle.

NOTE

Make sure that you do not leave the key inside the vehicle when locking the doors from the outside without the key.

■ Locking and unlocking from the inside

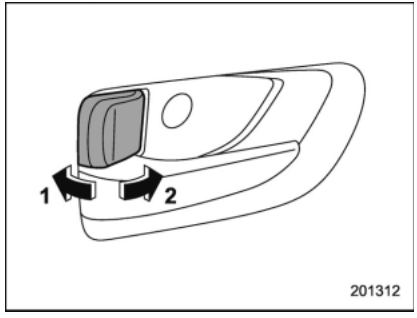

1) Lock
2) Unlock

To lock the door from the inside, rotate the lock lever rearward. To unlock the door from the inside, rotate the lock lever forward.

The red mark on the lock lever appears when the door is unlocked.

Pull the inside door handle to open an unlocked door.

Always make sure that all doors and the rear gate (for 5-door) are closed before starting to drive.

⚠ WARNING

Keep all doors locked when you drive, especially when small children are in your vehicle.

Along with the proper use of seatbelts and child restraints, locking the doors reduces the chance of being thrown out of the vehicle in an accident.

It also helps prevent passengers from falling out if a door is accidentally opened, and intruders from unexpectedly opening doors and entering your vehicle.

■ Battery drainage prevention function

If a door or the rear gate (5-door) is not completely closed, the interior lights will remain illuminated as a result. However, several lights are automatically turned off by the battery drainage prevention function to prevent the battery from discharging. The following interior lights are affected by this function.

– CONTINUED –

Item	Switch position	Automatically turning off
Map lights*1	OFF*1	Approximately 30 seconds later
Dome light	DOOR	Approximately 20 minutes later
Ignition switch light	—	Approximately 20 minutes later
Cargo area light	DOOR	None*2

*1: The battery drainage prevention function affects only the map lights on models with the moonroof, and only when the map light switches are in the OFF position. The map lights on models without the moonroof do not turn off automatically, so push the light switches manually to turn them off.

*2: The cargo area light is not affected by the battery drainage prevention function, so the light does not turn off automatically. To turn off the light, it is necessary that the rear gate (5-door) is completely closed.

The operational/non-operational setting of this function can be changed by a SUBARU dealer. Contact your SUBARU dealer to change the setting.

NOTE

• The factory setting (default setting) for this function is set as "operational".

• When leaving the vehicle, please make sure that all doors and the rear gate (5-door) are completely closed.

• The battery drainage prevention function does not operate while the key is in the ignition switch.

Power door locking switches

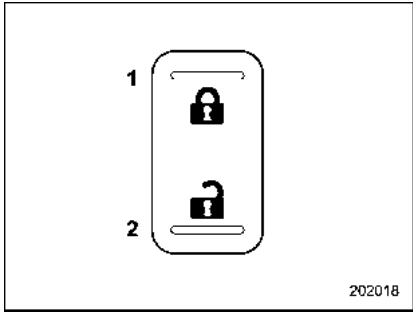

1) Lock
2) Unlock

All doors and the rear gate (for 5-door) can be locked and unlocked by the power door locking switches located at the driver's side and the front passenger's side doors.

To lock the doors, push the front side of the switch.

To unlock the doors, push the rear side of the switch.

When you close the doors after you set the door locks, the doors remain locked.

NOTE

Make sure that you do not leave the key inside the vehicle before locking the doors from the outside using the power door locking switches.

■ Key lock-in prevention function

This function prevents the doors from being locked with the key still in the ignition switch.

▼ Behavior with key lock-in prevention function operational

With the driver's door open, the doors are automatically kept unlocked even if the front side of the power door locking switch is pressed.

▼ Behavior with key lock-in prevention function non-operational

- If the lock lever is turned to the rear ("LOCK") position with the driver's door open and the driver's door is then closed with the lock lever in that position, the driver's door is locked.
- If the spare key is used to lock the driver's door from the outside of the vehicle, the door is locked.

This function's operational/non-operational setting can be changed by a SUBARU dealer. Contact a SUBARU dealer for details.

NOTE

- **The factory setting (default setting) for this function is set as "operational".**
- **When leaving the vehicle, make sure you are holding the key before locking the doors.**

Remote keyless entry system

⚠ CAUTION

- **Do not expose the remote transmitter to severe shocks, such as those experienced as a result of dropping or throwing.**
- **Do not take the remote transmitter apart except when replacing the battery.**
- **Do not get the remote transmitter wet. If it gets wet, wipe it dry with a cloth immediately.**
- **When you carry the remote transmitter on an airplane, do not press the button of the remote transmitter while in the airplane. When any button of the remote transmitter is pressed, radio waves are sent and may affect the operation of the airplane. When you carry the remote transmitter in a bag on an airplane, take measures to prevent the buttons of the remote transmitter from being pressed.**
- **FCC WARNING**

  Changes or modifications not expressly approved by the party

– CONTINUED –

responsible for compliance could void the user's authority to operate the equipment.

This device complies with Part 15 of the FCC Rules and RSS-Gen of IC Rules. Operation is subject to the following two conditions: (1) this device may not cause harmful interference, and (2) this device must accept any interference received, including interference that may cause undesired operation.

Two transmitters are provided for your vehicle.

The remote keyless entry system has the following functions.

- Locking and unlocking the doors (and rear gate on the 5-door) without a key
- Unlocking the rear gate on the 5-door without a key
- Opening the trunk lid on the 4-door without a key
- Sounding a panic alarm
- Arming and disarming the alarm system. For detailed information, refer to "Alarm system" ☞2-15.

The operable distance of the remote keyless entry system is approximately 30 feet (10 meters). However, this distance will vary depending on environmental conditions. The system's operable distance will be shorter in areas near a facility or electronic equipment emitting strong radio waves such as a power plant, broadcast station, TV tower, or remote controller of home electronic appliances.

The remote keyless entry system does not operate when the key is inserted in the ignition switch.

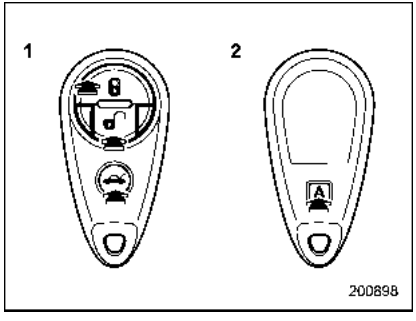

: Trunk lid/rear gate unlock button
: Unlock/disarm button
: Lock/arm button
A: Panic button

1) Front
2) Back

NOTE

The turn signal lights will flash once/twice under the following conditions.

- **When locking the doors**
- **When unlocking the doors**
- **When opening the trunk lid (4-door models)**
- **When unlocking the rear gate (5-door models)**

Operation of the turn signal light in the above cases can be set to "On" or "Off" by a SUBARU dealer. Consult your SUBARU dealer for details.

■ Locking the doors

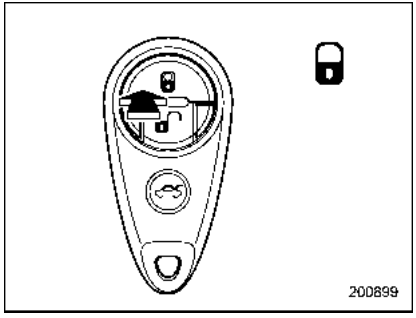

Press the "🔒" button to lock all doors and rear gate (5-door). An electronic chirp will sound once and the turn signal lights will flash once.

If any of the doors (or the rear gate/trunk lid) is not fully closed, an electronic chirp will sound five times and the turn signal lights will flash five times to alert you that the doors (or the rear gate/trunk lid) are not properly closed. When you close the door, it will automatically lock and then an electronic chirp will sound once and the turn signal lights will flash once.

■ Unlocking the doors

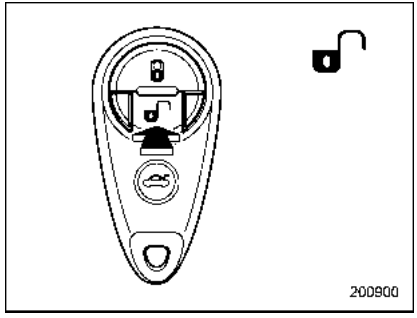

Press the "🔓" button to unlock the driver's door. An electronic chirp will sound twice and the turn signal lights will flash twice. To unlock all doors and the rear gate (5-door), briefly press the "🔓" button a second time within 5 seconds.

NOTE

If the interval between the first and second presses of the "🔓" button (for unlocking of all of the doors and the rear gate) is extremely short, the system may not respond.

■ Opening the trunk lid/unlocking rear gate

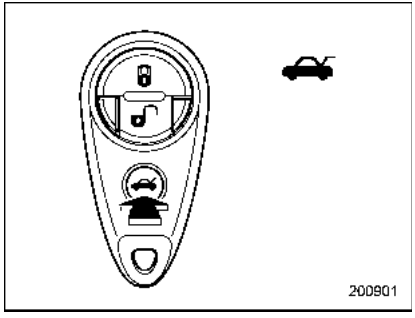

▼ 4-door models

The trunk lid opens when the "🚗" button is pressed continuously for at least 2 seconds. An electronic chirp will sound twice and the turn signal lights will flash twice.

▼ 5-door models

Pressing the "🚗" button unlocks the rear gate.

An electronic chirp will sound twice and the turn signal lights will flash twice.

– CONTINUED –

■ Vehicle finder function

Use this function to find your vehicle parked among many vehicles in a large parking lot. Provided you are within 30 feet (10 meters) of the vehicle, pressing the "🔒" button three times in a 5-second period will cause your vehicle's horn to sound once and its turn signal lights to flash three times.

NOTE

If the interval between presses is too short when you press the "🔒" button three times, the system may not respond to the signals from the remote transmitter.

■ Sounding a panic alarm

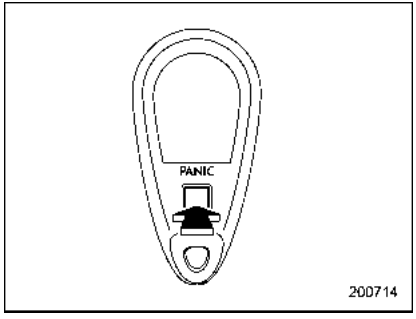

A "PANIC" button is located on the back of the transmitter.

To activate the alarm, press the "PANIC" button once.

The horn will sound and the turn signal lights will flash.

To deactivate the panic alarm, press any button on the remote transmitter. Unless a button on the remote transmitter is pressed, the alarm will be deactivated after approximately 30 seconds.

■ Selecting audible signal operation

Using an electronic chirp, the system will give you an audible signal when the doors lock and unlock. If desired, you may turn the audible signal off.

Do the following to deactivate the audible signal. You can also use the same steps to restore the function.

1. Sit in the driver's seat and shut all doors and the rear gate.
2. Hold down the REAR (UNLOCK) side of the power door locking switch.
3. While holding down the REAR (UNLOCK) side of the power door locking switch, pull the key out and re-insert it into the ignition switch at least 6 times within 10 seconds after Step 2.
4. Open and close the driver's door once within 10 seconds after Step 3.
5. The turn signal lights flash 3 times to indicate completion of the setting.

You may have the above procedure performed by your SUBARU dealer.

■ Replacing the battery

⚠ CAUTION

- **Do not let dust, oil or water get on or in the transmitter when replacing the battery.**
- **Be careful not to damage the printed circuit board in the transmitter when replacing the battery.**
- **Be careful not to allow children to touch the battery and any removed parts; children could swallow them.**
- **There is a danger of explosion if an incorrect replacement battery is used. Replace only with the same or equivalent type of battery.**
- **Batteries should not be exposed to excessive heat such as sunshine, fire or the like.**

When the transmitter battery begins to get weak, transmitter range will begin to decrease. Replace the battery as soon as possible.

To replace the battery:

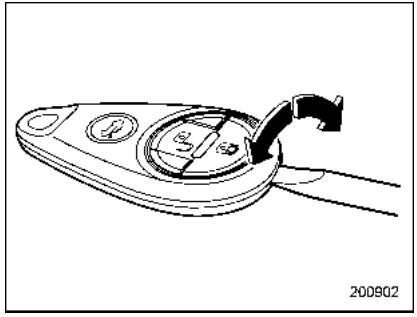

1. Open the transmitter case using a flat-head screwdriver.

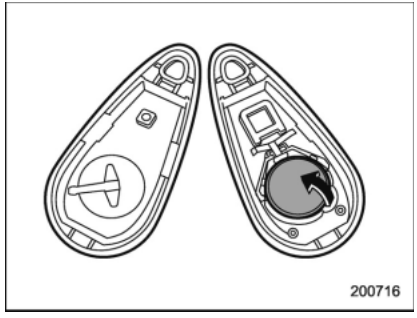

2. Remove the old battery from the holder.

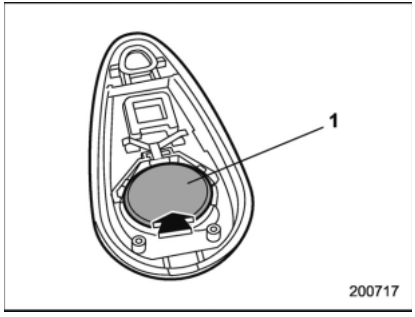

1) Negative (−) side facing up

3. Replace with a new battery (type **CR2025** or equivalent) making sure to install the new battery with the negative (−) side facing up.
4. Refit the removed half of the transmitter case.

After the battery is replaced, the transmitter must be synchronized with the remote keyless entry system's control unit. Press either the "🔒" or "🔓" button six times to synchronize the unit.

■ Replacing lost transmitters

If you lose a transmitter or want to purchase additional transmitters (up to four can be programmed), you should reprogram all of your transmitters for secur-

– CONTINUED –

ity reasons. It is recommended that you have your dealer program all of your transmitters into your system.

▼ Programming the transmitters

The remote keyless entry system is equipped with a special code learning feature that allows you to program new transmitter codes into the system or to delete old ones. The system can learn up to four unique transmitter codes. The four transmitter codes may be the same or different.

Programming transmitter codes into system:



Bag containing transmitter

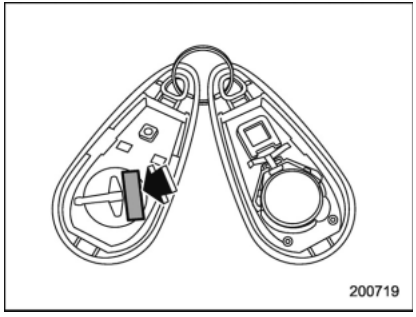

Transmitter circuit board

To register a new transmitter with the remote keyless entry system, it is necessary to program the transmitter's code (identification number) into the system. A label showing the code is affixed to the bag containing the transmitter, and another is affixed to the circuit board inside the transmitter. If there is no bag, open the transmitter case and make a note of the eight-digit number. Program the number into the system in accordance with the following procedure:

1. Firmly close the doors and the rear gate, or trunk lid.
2. Open the driver's door, sit in the driver's seat, and close the door.
3. Perform the following steps within 45 seconds.

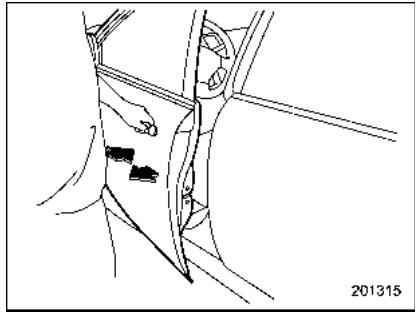

(1) Open and close the driver's door once.

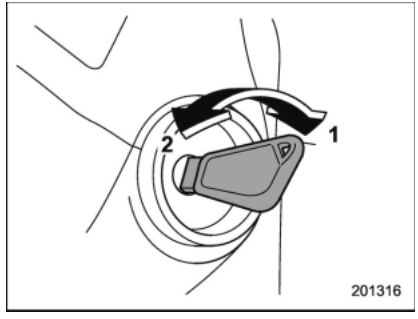

1) ON
2) LOCK

(2) Insert the key into the ignition switch, then turn it from the "LOCK"

position to the “ON” position 10 times within 15 seconds.

NOTE

• When you complete step (2), an electronic tone will sound once.
• If you do not perform steps (1) and (2) within 45 seconds, an error will occur. Neither an electronic tone nor the buzzer will sound, and the interior lamp will not flash. In this event, perform the whole procedure again beginning with part 1.

4. Open and close the door once within 15 seconds.

NOTE

• When part 4 of the procedure is completed, an electronic tone will sound for 30 seconds.
• If you do not perform the operations in part 4 within 15 seconds, an error will occur and the electronic tone will not sound. In this event, perform the registration steps again beginning with part 3 of the procedure.

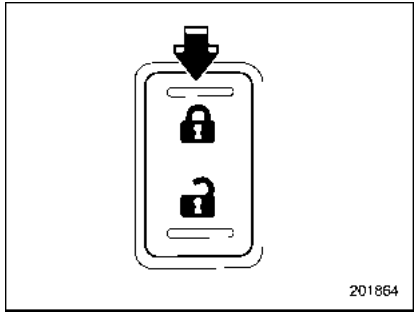

5. Before the electronic tone stops sounding, push the lock side of the power door lock switch the same number of times as the leftmost digit of the transmitter code. For example, push the lock switch eight times if the leftmost digit of the code is 8.

NOTE

• The electronic tone will stop sounding when you start entering the number.
• If you do not start entering the number using the lock switch before the electronic tone stops sounding, an error will occur. In this event, perform the registration steps again beginning with part 3 of the procedure.
• If the interval between one push of the switch and the next exceeds 5 seconds, an error will occur. In this event, perform the procedure again beginning with part 4. If an error occurs six times, perform the procedure again starting with part 3.

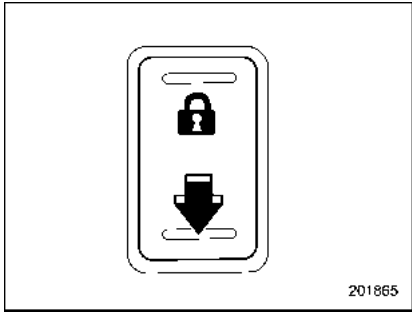

6. When you have finished entering the number, push the unlock side of the lock switch within 5 seconds.

NOTE

• An electronic tone will sound.
• If you push the unlock side of the lock switch when more than 5 seconds have passed, an error will occur. In this event, perform the procedure again beginning with part 4. If an error occurs six times, perform the procedure again starting with part 3.

– CONTINUED –

7. Perform parts 5 and 6 of the procedure for each of the remaining digits of the transmitter code beginning with the second digit (counting from the left) and finishing with the eighth digit.

NOTE

• When you finish entering the eighth digit, an electronic tone will sound for 30 seconds.
• If the interval between one push of the switch and the next exceeds 5 seconds, an error will occur. In this event, perform the procedure again beginning with part 4. If an error occurs six times, perform the procedure again starting with part 3.

8. Before the electronic tone stops sounding, use the power door lock switch to reenter the transmitter code beginning with the leftmost digit.

NOTE

If you do not start entering the number using the lock switch before the electronic tone stops sounding, an error will occur. In this event, perform the procedure again beginning with part 3.

9. When you have finished entering the code a second time, an electronic tone will sound for 1 second and automatic door locking and unlocking operation will take place once to indicate completion of registration, provided the code entered the second time is identical to that entered the first time.

NOTE

If the code entered the second time is not identical to the code entered the first time, an error will occur. In this event, perform the procedure again beginning with part 5. If an error occurs five times, perform the procedure again starting with part 3.

10. If you wish to program another transmitter code into the system (up to four transmitter codes can be programmed into the system), perform the procedure beginning with part 4. When you have finished programming all of the necessary transmitter codes into the system, remove the key from the ignition switch.
11. Test every registered transmitter to confirm correct operation.

▼ Deleting old transmitter codes

The control unit of the remote keyless entry system has four memory locations to store transmitter codes, giving it the ability to operate with up to four transmitters. When you lose a transmitter, the lost transmitter's code remains in the memory. For security reasons, lost transmitter codes should be deleted from the memory.

To delete old transmitter codes, program four transmitter codes into the system. If you have only one current transmitter, program it four times. If you have two current transmitters, program each one twice. If you have three current transmitters, program two of them once and the third one twice. This process will leave only current transmitter codes in the system's memory.

NOTE

Make sure no one else is operating their keyless entry system within range of your vehicle when programming transmitters. If someone else were to operate their remote transmitter while you are programming your transmitters, it is possible that their transmitter code will be programmed into your system, allowing them unauthorized access to your vehicle.

Alarm system

The alarm system helps to protect your vehicle and valuables from theft. The horn sounds and the turn signal lights flash if someone attempts to break into your vehicle.

The system can be armed and disarmed with the remote transmitter.

The system does not operate when the key is inserted into the ignition switch.

Your vehicle's alarm system has been set for activation at the time of shipment from the factory. You can set the system for deactivation yourself or have it done by your SUBARU dealer.

■ System operation

The alarm system will sound the following alarms when triggered.

- The vehicle's horn will sound for 30 seconds.
- The turn signal lights will flash for 30 seconds.

If any of the doors or the rear gate/trunk lid remains open after the 30-second period, the horn will continue to sound for a maximum of 3 minutes. If the door or the rear gate/trunk lid is closed while the horn is sounding, the horn will stop sounding with a delay of up to 30 seconds.

The alarm is triggered by:

- Opening any of the doors, the rear gate or trunk lid
- Physical impact to the vehicle, such as forced entry (only models with shock sensors (dealer option))

NOTE

The alarm system can be set to trigger the illumination of the following interior lights.

- **Dome light (illuminates only when the dome light switch is in the "DOOR" position)**
- **Map lights (models with moonroof)**

The notifications regarding the dome light and the map lights are deactivated as the factory setting. A SUBARU dealer can activate the system. Contact your SUBARU dealer for details.

■ Activating and deactivating the alarm system

To change the setting of your vehicle's alarm system for activation or deactivation, do the following.

1. Disarm the alarm system. Refer to "Disarming the system" ☞2-17.
2. Sit in the driver's seat and shut all doors (and the rear gate if your vehicle is a 5-door).
3. Turn the ignition switch to the "ON" position.
4. Hold down the REAR (UNLOCK) side of the driver's power door locking switch, open the driver's door within the following 1 second, and wait 10 seconds without releasing the switch. The setting will then be changed as follows.

If the system was previously activated:

The odometer/trip meter screen displays "AL oF" and the horn sounds twice, indicating that the system is now deactivated.

If the system was previously deactivated:

The odometer/trip meter screen displays "AL on" and the horn sounds once, indicating that the system is now activated.

NOTE

You may have the above setting change done by your SUBARU dealer.

– CONTINUED –

■ If you have accidentally triggered the alarm system

▼ To stop the alarm

Do any of the following operations:

- Press any button on the remote transmitter.
- Turn the ignition switch to the “ON” position.

NOTE

Only registered keys will stop the alarm. If the immobilizer transponder is not registered, the alarm will not stop.

■ Arming the system

▼ To arm the system using remote transmitter

1. Close all windows.
2. Remove the key from the ignition switch.
3. Open the doors and get out of the vehicle.
4. Make sure that the engine hood (and the trunk lid on the 4-door) are locked.
5. Close all doors (and the rear gate on the 5-door).

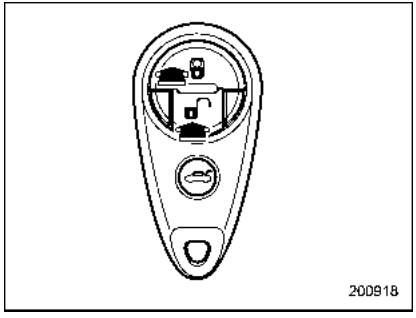

: Press to Arm the system.
: Press to Disarm the system.

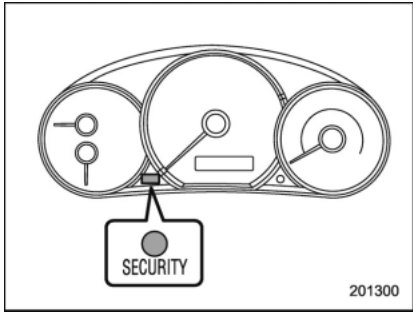

6. Briefly press the “” button (for less than 2 seconds). All doors (and the rear gate on the 5-door) will lock, an electronic chirp will sound once, the turn signal lights will flash once, and the security indicator light will start flashing rapidly. After rapid flashing for 30 seconds (standby time), the indicator lights will then flash slowly (twice approximately every 2 seconds), indicating that the system has been armed for surveillance.

If any of the doors, (rear gate or trunk lid) is not fully closed, an electronic chirp sounds five times, the turn signal lights flash five times to alert you that the doors (or the rear gate) are not properly closed. When you close the door, the system will automatically arm and doors will automatically lock.

▼ To arm the system using power door locking switches

1. Close all windows.
2. Remove the key from the ignition switch.
3. Open the doors and get out of the vehicle.
4. Make sure that the engine hood is locked.
5. Close the doors (and the rear gate on the 5-door) but leave only the driver’s door or the front passenger’s door open.

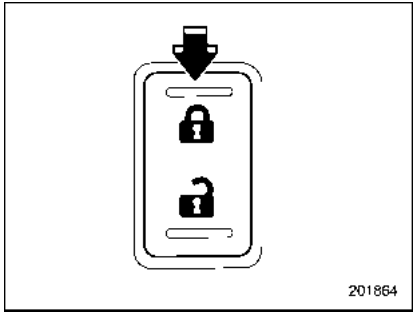

6. Push the front side (“LOCK” side) of the power door locking switch to set the door locks.

7. Close the door. An electronic chirp will sound once, the turn signal lights will flash once and the security indicator light will start flashing rapidly. After rapid flashing for 30 seconds (standby time), the indicator lights will then flash slowly (twice approximately every 2 seconds), indicating that the system has been armed for surveillance.

NOTE

• The system can be armed even if the engine hood and/or the windows are opened. Always make sure that they are fully closed before arming the system.

• The 30-second standby time can be eliminated if you prefer. Have it performed by your SUBARU dealer.

• If your vehicle is a 4-door and you unlock the trunk using the remote transmitter’s “” button with the alarm system armed, the system will be temporarily placed in a standby state. The system will go back to the surveillance state upon locking the trunk.

• The system is in the standby mode for a 30-second period after locking the doors with the remote transmitter. The security indicator light will flash at short intervals during this period.

• If any of the following actions are done during the standby period, the system will not switch to the surveillance state.

– Doors are unlocked using the remote transmitter.

– Any door (including the rear gate of a 5-door or the trunk of a 4-door) is opened.

– Ignition switch is turned to the “ON” position.

■ Disarming the system

Briefly press the “” button (for less than 2 seconds) on the remote transmitter. The driver’s door will unlock, an electronic chirp will sound twice, the turn signal lights will flash twice. The flashing of the security indicator light will then change slowly (once approximately every 3 seconds from twice approximately every 2 seconds), indicating that the alarm system has been disarmed.

NOTE

After disarming the alarm system, briefly press the “” button a second time within 5 seconds to unlock all other doors and the rear gate (5-door).

▼ Emergency disarming

If you cannot disarm the system using the transmitter (i.e. the transmitter is lost, broken or the transmitter battery is too weak), you can disarm the system without using the transmitter as follows.

• Turn the ignition switch from the “LOCK” to the “ON” position with a registered key.

■ Valet mode

When you choose the valet mode, the alarm system does not operate. In valet mode, the remote transmitter is used only for locking and unlocking the doors and rear gate (5-door) and panic activation.

To enter the valet mode, change the setting of your vehicle’s alarm system for

– CONTINUED –

deactivation mode. Refer to “Activating and deactivating the alarm system” ☞2-15. The security indicator light will continue to flash once every 3 seconds indicating that the system is in the valet mode.

To exit valet mode, change the setting of your vehicle’s alarm system for activation mode. Refer to “Activating and deactivating the alarm system” ☞2-15.

■ Passive arming

When passive arming mode has been programmed by the dealer, arming of the system is automatically accomplished without using the remote transmitter. Note that in this mode, DOORS MUST BE MANUALLY LOCKED.

▼ To enter the passive mode

If you wish to program the passive arming mode, have it done by your SUBARU dealer.

▼ Arming the system

⚠ CAUTION

In passive mode, the system will automatically activate the alarm but WILL NOT automatically lock the doors. In order to lock the doors you must either lock them as indicated in step 4 below or with the key once they have been closed. Failure to lock the doors manually will result in a higher security risk.

1. Turn the ignition switch to the “ON” position.

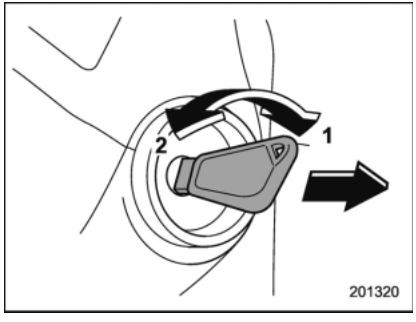

1) ON
2) LOCK

2. Turn the ignition switch from “ON” to “LOCK” position and remove the key from the ignition switch.
3. Open the doors and get out of the vehicle.

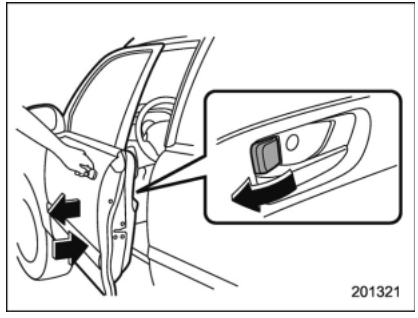

4. Before closing the doors, lock all doors with the inside door lock levers.
5. Close the doors. The system will automatically arm after 1 minute.

In the passive mode, the system can also be armed with the remote transmitter or with the power door locking switches. If the remote transmitter or power door locking switch is used to lock the vehicle, arming will take place immediately regardless of whether or not the passive mode has been selected.

▼ **Disarming the system**

To disarm the system, briefly press the "🔓" button on the transmitter.

■ Tripped sensor identification

The security indicator light flashes when the alarm system has been triggered. Also, the number of flashes indicates the location of unauthorized intrusion or the severity of impact on the vehicle.

When the ignition switch is turned to the "ON" position, the indicator light will light for 1 second and then flash as follows.

- When a door or rear gate (5-door) was opened: 5 times
- When a door or the trunk (4-door) was opened: 4 times
- When the ignition switch was turned to the "ON" position: 3 times
- When a strong impact or multiple impacts were sensed: twice (only models with shock sensors (dealer option))
- When a light impact was sensed: once (only models with shock sensors (dealer option))

NOTE

Any of the above indicator light flashings will recur each time the ignition switch is turned to the "ON" position. Rearming the alarm system cancels the flashing.

■ Shock sensors (dealer option)

The shock sensors trigger the alarm system when they sense impacts applied to the vehicle and when any of their electric wires are cut. The alarm system causes the horn to sound and the turn signal lights to flash for a short time when the sensed impact is weak, but it warns of a strong impact or multiple impacts by sounding the horn and flashing the turn signal lights, both lasting approximately 30 seconds.

If you desire, your SUBARU dealer can connect them and set them for activation or deactivation.

NOTE

- **The shock sensors are not always able to sense impacts caused by breaking in, and cannot sense an impact that does not cause vibration (such as breaking the glass using a rescue hammer).**
- **The shock sensors may sense vibration as indicated in the following examples and trigger the alarm system. Select the settings of the alarm system and shock sensors appropriately depending on where you usually park your vehicle.**

Examples:

  - **Vibration from a construction site**
  - **Vibration in a multistory car park**
  - **Vibration from trains**

- **You can have the sensitivity of the shock sensors adjusted to your preference by your SUBARU dealer.**

Child safety locks

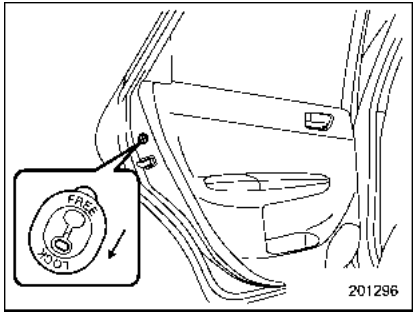

Each rear door has a child safety lock that prevents the door from being opened even if the inside door handle is pulled.

When the child safety lock lever is in the lock position, the door cannot be opened from inside regardless of the position of the inner door handle lock lever. The door can only be opened from the outside.

⚠ WARNING

Always turn the child safety locks to the "LOCK" position when children sit in the rear seat. Serious injury could result if a child accidentally opens the door and falls out.

Windows

■ Power windows

⚠ WARNING

To avoid serious personal injury caused by entrapment, always obey the following instructions without exception.

- **When operating the power windows, be extremely careful to prevent anyone's fingers, arms, neck, head or other objects from being caught in the window.**
- **Always lock the passengers' windows using the lock switch when children are riding in the vehicle.**
- **Before leaving the vehicle, always remove the key from the ignition switch for safety and never allow an unattended child to remain in the vehicle. Failure to follow this procedure could result in injury to a child operating the power window.**

The power windows operate only when the ignition switch is in the "ON" position.

▼ Driver's side switches

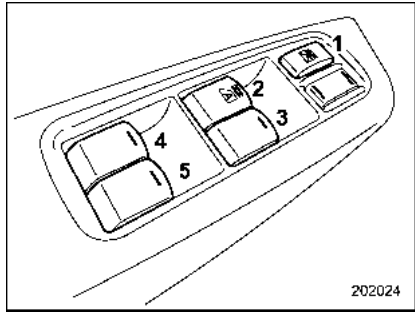

1) Lock switch
2) For driver's window (with one-touch auto up and down feature)
3) For front passenger's window
4) For rear left window
5) For rear right window

All door windows can be controlled by the power window switch cluster at the driver side door.

▽ **Operating the driver's window**

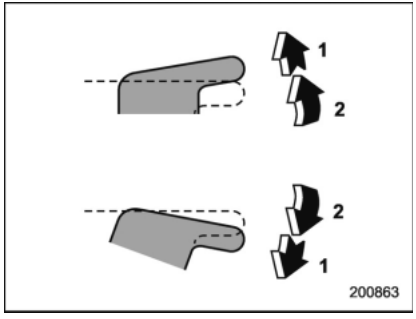

1) Automatically open/close
2) Open/close

To open:

Push the switch down lightly and hold it. The window will open as long as the switch is held.

This switch also has a one-touch auto down feature that allows the window to be opened fully without holding the switch.

Push the switch down until it clicks and release it, and the window will fully open. To stop the window halfway, pull the switch up lightly.

To close:

Pull the switch up lightly and hold it. The window will close as long as the switch is held.

This switch also has a one-touch auto up feature that allows the window to be closed fully without holding the switch.

Pull the switch up until it clicks and release it, and the window will fully close. To stop the window halfway, push the switch down lightly.

NOTE

If the vehicle's battery is disconnected due to situations such as battery or fuse replacement, the one-touch auto up/down function is deactivated. Initialize the power window to reactivate the one-touch auto up/down function. Refer to "Initialization of power window" ☞2-23.

▽ **Anti-entrapment function**

⚠ CAUTION

- **Never attempt to test this function using fingers, hands or other parts of your body.**
- **The anti-entrapment function may not operate properly if some object gets trapped just before the window fully closes.**

NOTE

- **If a window detects an impact similar to that caused by trapping an object (for example, when the vehicle encounters a deep pothole), the anti-entrapment function may operate.**
- **The window cannot be operated for a few seconds after the anti-entrapment function operates.**
- **If the vehicle's battery is disconnected due to situations such as battery or fuse replacement, the anti-entrapment function is deactivated. Initialize the power window to reactivate the anti-entrapment function. Refer to "Initialization of power window" ☞2-23.**

While closing the driver's window automatically, if the window senses a substantial enough object trapped between the window and the window frame, it automatically moves down slightly and stops.

– CONTINUED –

▽ **Operating the passengers' windows**

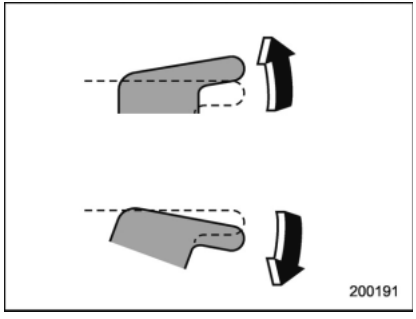

To open:
Push the appropriate switch down and hold it until the window reaches the desired position.

To close:
Pull the switch up and hold it until the window reaches the desired position.

▽ **Locking the passengers' windows**

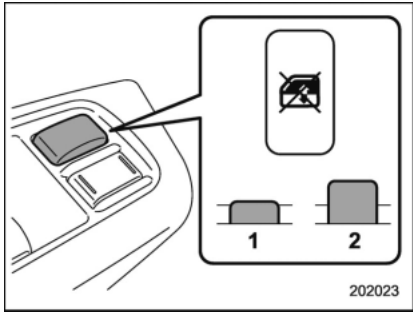

1) Lock
2) Unlock

Push the lock switch. When the lock switch is in the "LOCK" position, the passengers' windows cannot be opened or closed.

Push the switch again to cancel the passengers' window locking.

▼ **Passengers' side switches**

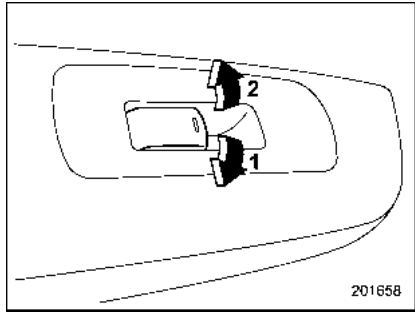

1) Open
2) Close

To open:
Push the switch down and hold it until the window reaches the desired position.

To close:
Pull the switch up and hold it until the window reaches the desired position.

When the lock switch on the power window switch cluster, located on the driver's side door, is in the "LOCK" position, the passengers' windows cannot be operated with the passengers' switches.

▼ **Initialization of power window**

If the vehicle's battery is disconnected due to situations such as battery or fuse replacement, the following functions are deactivated.

- One-touch auto up/down function
- Anti-entrapment function

Initialize the power window using the following procedure to reactivate these functions.

1. Close the driver's door.
2. Turn the ignition switch to the "ON" position.
3. Open the driver's side window halfway by pushing down the power window switch.
4. Pull up the power window switch and close the window completely. Continue pulling up the switch for approximately 1 second after the window is closed completely.

Trunk lid (4-door)

⚠ WARNING

- **To prevent dangerous exhaust gas from entering the vehicle, always keep the trunk lid closed while driving.**
- **Help prevent children, adults or animals from locking themselves in the trunk. On hot or sunny days, the temperature in the trunk could quickly become high enough to cause death or serious heat-related injuries including brain damage to anyone locked inside, particularly for small children.**
- **When leaving the vehicle, either close all windows and lock all doors. Also make certain that the trunk is closed.**

■ To open and close the trunk lid from outside

The trunk lid can be opened using the remote keyless entry system. Refer to "Remote keyless entry system" ☞2-7.

To close the trunk lid, lightly press the trunk lid down until the latch engages.

NOTE

Do not leave your valuables in the trunk when you leave your vehicle.

■ To open the trunk lid from inside

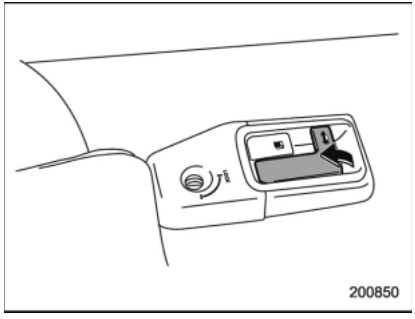

Pull the trunk lid release lever upward.

– CONTINUED –

■ To lock and unlock the trunk lid release lever

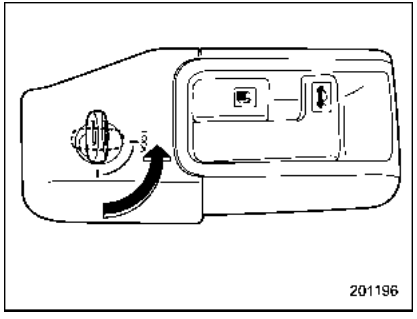

When you entrust your vehicle key to another person, you can lock the trunk lid release lever to prevent luggage in the trunk from being stolen. To lock the trunk lid release lever, insert the master key or submaster key into the key cylinder at the rear of the release lever and turn it counterclockwise. Then, entrust the person with the valet key only. To unlock the trunk lid release lever, turn the key clockwise.

■ Internal trunk lid release handle

The internal trunk lid release handle is a device designed to open the trunk lid from inside the trunk. In the event children or adults become locked inside the trunk, the handle allows them to open the lid. The handle is located on the inside of the trunk lid.

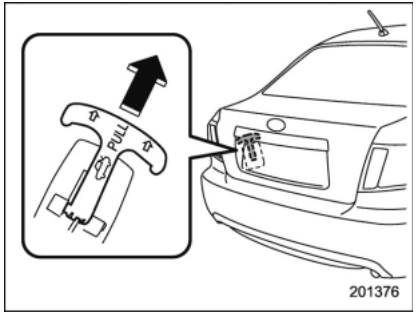

To open the trunk lid from inside the trunk, pull the yellow handle upward as indicated by the arrow on the handle.

This operation unlocks the trunk lid. Then, push up the lid.

The handle is made of material that remains luminescent for approximately an hour in the dark trunk space after it is exposed to ambient light even for a short time.

⚠ WARNING

Never allow any child to get in the trunk and play with the release handle. If the driver starts the vehicle without knowing that a child is inside the trunk and the child opens the lid using the release handle, the child could fall out and be killed or seriously injured.

⚠ CAUTION

- **Do not close the lid while gripping the release handle. The handle may be damaged.**
- **Do not use the handle as a hook to fasten straps or ropes to secure your cargo in the trunk. Such use may result in damage of the handle.**
- **Load the trunk so that cargo can not strike the release handle. If the cargo hits the handle while the vehicle is being driven, the handle may be pulled up and the trunk lid may open. That may cause cargo to fall out of the trunk, which could create a traffic safety hazard.**

▼ **Inspection**

Perform the following steps at least twice a year to check the release handle for correct operation.

1. Open the trunk lid.

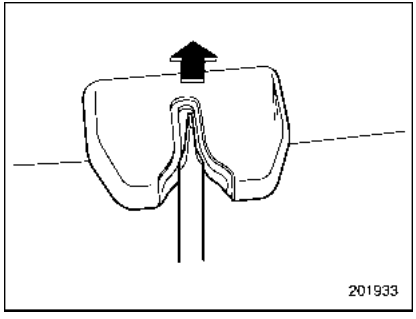

2. Use a flat-head screwdriver with a thin blade. Slide the screwdriver blade from the slit aperture of the lock assembly to the end until you hear a click.

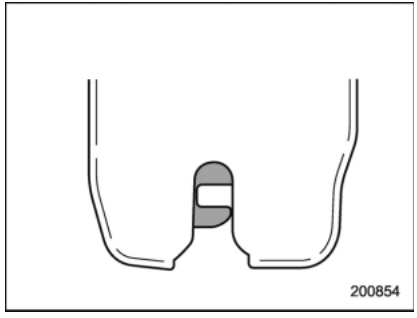

This places the latch in the locked position.

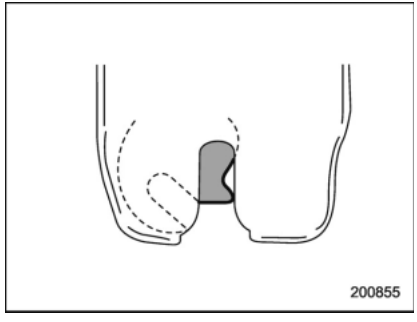

3. Move the release handle, from outside the vehicle, in the direction of the arrow to check if the latch is released.

If the latch is not released, contact your SUBARU dealer.

In that case, use the key to release the latch, then close the trunk lid.

Also, if the movement of the release handle feels restricted or not entirely smooth during operation, or the handle and/or handle base is cracked, contact your SUBARU dealer.

Rear gate (5-door)

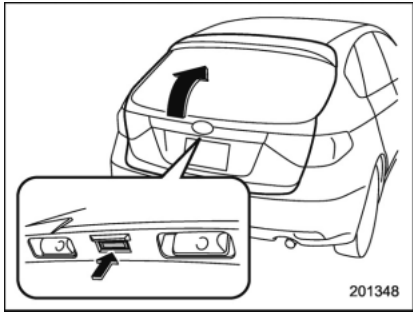

The rear gate can be locked and unlocked using any of the following systems.

- Power door locking switch: Refer to “Power door locking switches” ☞2-6.
- Remote keyless entry system: Refer to “Remote keyless entry system” ☞2-7.

To open:
First unlock the rear gate lock then push the rear gate opener button.

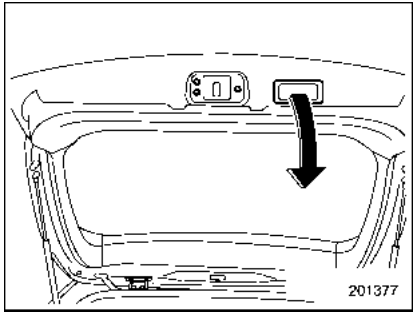

To close:
Lower the rear gate slowly and push down firmly until the latch engages.
The rear gate can be lowered easily if you pull it down holding the recessed grip.

⚠ WARNING

- **To prevent dangerous exhaust gas from entering the vehicle, always keep the rear gate closed while driving.**
- **Do not attempt to shut the rear gate while holding the recessed grip. Also avoid closing the rear gate by pulling on the recessed grip from inside the cargo space. There is a danger of your hand being caught and injured.**

⚠ CAUTION

- **Do not jam a plastic bag in or place cellophane tape on the rear gate stays or scratch the stays while loading or unloading cargo. That could cause leakage of gas from the stays, which may result in their inability to hold the rear gate open.**
- **Be careful not to hit your head or face on the rear gate when opening or closing the rear gate and when loading or unloading cargo.**

NOTE

If the rear gate cannot be unlocked due to a discharged vehicle battery, a malfunction in the door locking/unlocking system or other causes, you can unlock it by manually operating the rear gate lock release lever. For the procedure, refer to "Rear gate – if the rear gate cannot be unlocked" ☞9-16.

Moonroof (if equipped)

⚠ WARNING

Never let anyone's hands, arms, head or any objects protrude from the moonroof. A person could be seriously injured if any of the following conditions occur.

- **The vehicle stops suddenly.**
- **The vehicle turns sharply.**
- **The vehicle is involved in an accident.**
- **Body parts protruding from the vehicle are struck by outside objects.**

To avoid serious personal injury caused by accidental or improper operation, the driver is responsible for obeying the following instructions without exception.

- **Before closing the moonroof, make sure that no one's hands, arms, head or other objects will be accidentally caught in the moonroof.**
- **Before leaving the vehicle, always remove the key from the ignition switch for safety and never allow an unattended child to remain in the vehicle. Failure to follow this procedure could result in injury to a child operating the moonroof.**
- **Never try to check the anti-entrapment function by deliberately placing part of your body in the moonroof.**

⚠ CAUTION

- **Do not sit on the edge of the open moonroof.**
- **Do not operate the moonroof if falling snow or extremely cold conditions have caused it to freeze shut.**
- **The anti-entrapment function does not operate when the moonroof is being tilted down. Be sure to confirm that it is safe to do so before tilting the moonroof down.**

The moonroof has both tilting and sliding functions.

The moonroof operates only when the ignition switch is in the "ON" position.

– CONTINUED –

■ Moonroof switches

▼ Tilting moonroof

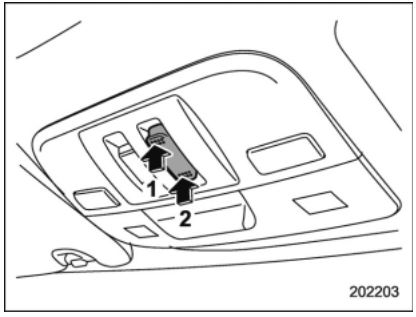

1) Raise
2) Lower

The tilting function will only operate when the moonroof is fully closed.

Push the rear side of the “UP/DOWN” switch to raise the moonroof.
Push the front side of the “UP/DOWN” switch to lower the moonroof.

Release the switch after the moonroof has been raised or has been lowered completely. Pushing the switch continuously may cause damage to the moonroof.

NOTE

One-touch operation does not take place when the moonroof is lowered. Push the switch continuously to raise and lower the moonroof.

▼ Sliding moonroof

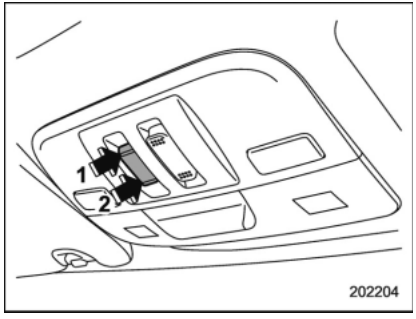

1) Open
2) Close

Push the “OPEN/CLOSE” switch rearward to open the moonroof. The sun shade will also be opened together with the moonroof.
Push the “OPEN/CLOSE” switch forward to close the moonroof.
To stop the moonroof at a selected midway position while opening or closing it, momentarily push the switch to the “OPEN” side or “CLOSE” side.

After washing the vehicle or after it rains, wipe away water on the roof prior to opening the moonroof to prevent drops of water from falling into the passenger compartment.

▼ Anti-entrapment function

When the moonroof senses a substantial enough object trapped between its glass and the vehicle’s roof during closure, it automatically moves back to the fully open position and stops there. The anti-entrapment function may also be activated by a strong shock on the moonroof even when there is nothing trapped.

⚠ CAUTION

Never attempt to test this function using fingers, hands or other parts of your body.

NOTE

For the sake of safety, it is recommended that you avoid driving with the moonroof fully opened.

■ Sun shade

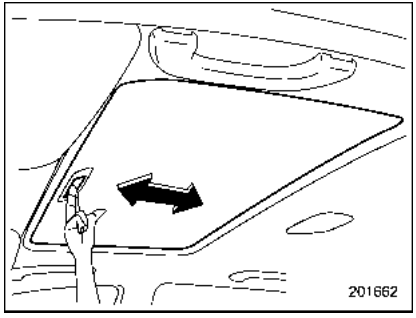

The sun shade can be slid forward or backward by hand while the moonroof is closed.

If the moonroof is opened, the sun shade also moves back.

Ignition switch 3-3
- LOCK 3-3
- Acc 3-4
- ON 3-4
- START 3-4
- Key reminder chime 3-4
- Ignition switch light 3-4

Hazard warning flasher 3-5

Meters and gauges 3-5
- Combination meter illumination 3-5
- Canceling the function for meter/gauge needle movement upon turning on the ignition switch 3-6
- Meter/Gauge needle illumination setting (except STI) 3-6
- Speedometer 3-7
- Odometer/Trip meter 3-7
- Tachometer 3-9
- Fuel gauge 3-9
- Temperature gauge 3-10

REV indicator light and buzzer (STI) 3-10
- Setting the alarm-level engine speed 3-11
- Deactivating the REV alarm system 3-12

Warning and indicator lights 3-12
- Seatbelt warning light and chime 3-13
- SRS airbag system warning light 3-14
- Front passenger's frontal airbag ON and OFF indicators 3-14
- CHECK ENGINE warning light/Malfunction indicator light 3-15
- Charge warning light 3-16
- Oil pressure warning light 3-16
- Rear differential oil temperature warning light (STI) 3-16
- Low tire pressure warning light (U.S.-spec. models) 3-16
- ABS warning light 3-18
- Brake system warning light 3-19
- Low fuel warning light 3-20
- Hill start assist warning light/Hill start assist OFF indicator light (STI) 3-20
- Door open warning light 3-20
- Vehicle Dynamics Control warning light/Vehicle Dynamics Control operation indicator light 3-20
- Vehicle Dynamics Control OFF indicator light/ Traction Control OFF indicator light (STI) 3-21
- Security indicator light 3-23
- SI-DRIVE indicator light (STI) 3-23
- Shift-up indicator light (STI) 3-23
- Turn signal indicator lights 3-24
- High beam indicator light 3-24
- Cruise control indicator light 3-24
- Cruise control set indicator light 3-24
- Front fog light indicator light (if equipped) 3-24
- Headlight indicator light 3-24
- Driver's control center differential auto indicator light (STI) 3-24
- Driver's control center differential indicator and warning lights (STI) 3-25
- REV indicator light (STI) 3-25

Clock 3-26

Information display 3-26
- Outside temperature indicator 3-27

Current fuel consumption (if equipped) 3-28
Average fuel consumption 3-28
Turn off display of fuel consumption indicator 3-28
Light control switch 3-29
Headlights 3-29
High/low beam change (dimmer) 3-30
Headlight flasher 3-30
Daytime running light system 3-30
Turn signal lever 3-31
Illumination brightness control 3-31
Headlight beam leveler (if equipped) 3-32
Front fog light switch (if equipped) 3-34
Wiper and washer 3-34
Windshield wiper and washer switches 3-36
Rear window wiper and washer switch – 5-door 3-37
Mirrors 3-38
Inside mirror 3-38
Auto-dimming mirror/compass (if equipped) 3-38
Auto-dimming mirror/compass with HomeLink® (if equipped) 3-39
Outside mirrors 3-45
Defogger and deicer 3-47
Tilt/telescopic steering wheel 3-48
Horn 3-49

Ignition switch

⚠ WARNING

- **Never turn the ignition switch to "LOCK" while the vehicle is being driven or towed because that will lock the steering wheel, preventing steering control. And when the engine is turned off, it takes a much greater effort than usual to steer.**
- **Before leaving the vehicle, always remove the key from the ignition switch for safety and never allow an unattended child to remain in the vehicle. Failure to follow this procedure could result in injury to a child or others. Children could operate the power windows, the moonroof or other controls or even make the vehicle move.**

⚠ CAUTION

Do not attach a large key holder or key case to either key. If it banged against your knees or hands while you are driving, it could turn the ignition switch from the "ON" position to the "Acc" or "LOCK" position, thereby stopping the engine. Also, if the key is attached to a keyholder or to a large bunch of other keys, centrifugal force may act on it as the vehicle moves, resulting in unwanted turning of the ignition switch.

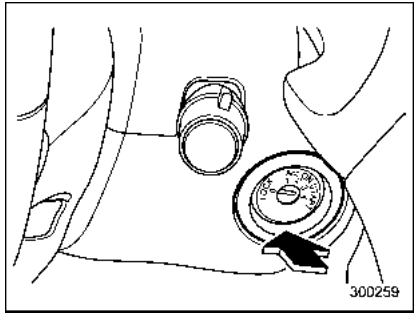

The ignition switch has four positions: LOCK, Acc, ON and START.

NOTE

- **Keep the ignition switch in the "LOCK" position when the engine is not running.**
- **Using electrical accessories for a long time with the ignition switch in the "ON" or "Acc" position can cause the battery to go dead.**
- **If the ignition switch will not move from the "LOCK" position to the "Acc" position, turn the steering wheel slightly to the left and right as you turn the ignition switch.**

■ LOCK

The key can only be inserted or removed in this position. The ignition switch will lock the steering wheel when you remove the key.

If turning the key is difficult, turn the steering wheel slightly to the right and left as you turn the key.

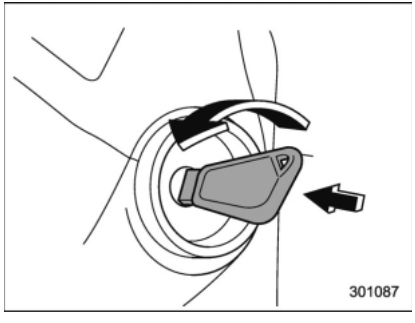

The key can be turned from "Acc" to "LOCK" only when the key is pushed in while turning it.

– CONTINUED –

■ Acc

In this position the electrical accessories (audio, accessory power outlet, etc.) can be used.

■ ON

This is the normal operating position after the engine is started.

■ START

The engine is started in this position. The starter cranks the engine to start it. When the key is released (after the engine has started), the key automatically returns to the “ON” position.

⚠ CAUTION

Do not turn the ignition switch to the “START” position while the engine is running.

If your registered key fails to start the engine, pull out the key once (the security indicator light will blink), and then insert the key in the ignition switch and turn it to the “START” position and again try to start the engine.

NOTE

The engine may not start in the following cases:

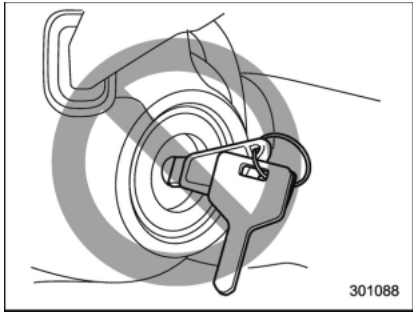

- **The key grip is touching another key or a metallic key holder.**

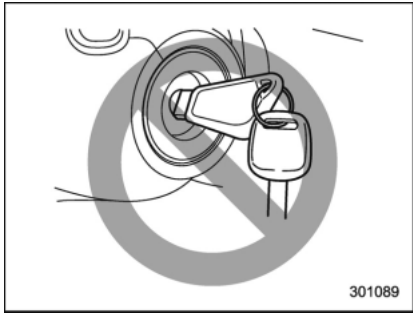

- **The key is near another key that contains an immobilizer transponder.**
- **The key is near or touching another transmitter.**

■ Key reminder chime

The reminder chime sounds when the driver’s door is opened and the ignition switch is in the “LOCK” or “Acc” position.

The chime stops under the following conditions.

- when the ignition switch is turned to the “ON” position
- when the key is removed from the ignition switch
- when the driver’s door is closed

■ Ignition switch light

For easy access to the ignition switch in the dark, the ignition switch light illuminates when the driver’s door is opened or when the driver’s door is unlocked using the remote keyless entry transmitter.

The light remains illuminated for several tens of seconds and then gradually turns off under the following conditions.

- when the driver’s door is closed
- when the doors are unlocked using the remote keyless entry transmitter

The light turns off immediately under the

following conditions.

- when the ignition switch is turned to the “ON” position
- when all doors and the rear gate (5-door) are locked using the remote keyless entry transmitter

Hazard warning flasher

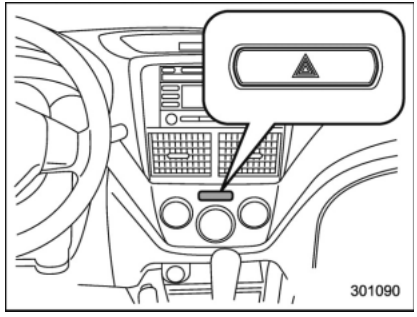

The hazard warning flasher is used to warn other drivers when you have to park your vehicle under emergency conditions. The hazard warning flasher works regardless of the position of the ignition switch.

To turn on the hazard warning flasher, push the hazard warning button on the instrument panel. To turn off the flasher, push the button again.

NOTE

When the hazard warning flasher is on, the turn signals do not work.

Meters and gauges

NOTE

Liquid-crystal displays are used in some of the meters and gauges on the combination meter. You will find their indications hard to see if you wear polarized glasses.

■ Combination meter illumination

When the ignition switch is turned to the “ON” position, the various parts of the combination meter are illuminated in the following sequence:

1. Warning lights, indicator lights, meter needles and gauge needles illuminate.
2. Meter needles and gauge needles each show MAX position.
3. Meter needles and gauge needles each show MIN position.
4. Meter and gauge dials, odometer and trip meter back light illuminate.
5. Regular illumination (for driving) begins.

– CONTINUED –

■ Canceling the function for meter/gauge needle movement upon turning on the ignition switch

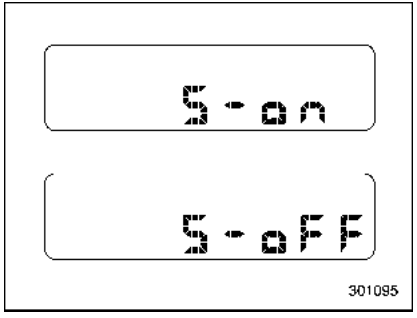

It is possible to activate or deactivate the movement of the meter needles and gauge needles that takes place when the ignition switch is turned to the “ON” position.

Turn the ignition switch to the “LOCK” or “Acc” position.

Press the trip knob to show “S-on” or “S-oFF” on the odometer and trip meter display.

The display can be switched as shown in the following illustration by pressing the trip knob.

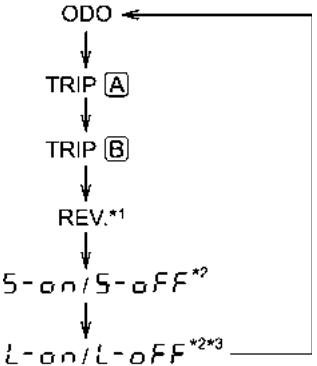

*1: STI only

*2: “S-on” or “S-oFF”, and “L-on” or “L oFF” cannot be displayed when the ignition switch is in the “ON” position.

*3: Except STI

To change the current setting, press the trip knob for at least 2 seconds.

S-on : Activated

S-oFF : Deactivated

NOTE

• Your vehicle’s initial movement setting of the meter/gauge needles has been set for activation “S-on” at the time of shipment from the factory.

• It is not possible to cancel the initial movement setting of the meter/gauge needles when the ignition switch is in the “ON” position. Cancel the setting when the ignition switch is in the “LOCK” or “Acc” position.

■ Meter/Gauge needle illumination setting (except STI)

When the setting is activated or deactivated, the meter needles and gauge needles illuminate and turn off as follows.

Activated:

When the driver’s door is opened while the ignition switch is in the “LOCK” position, the needles illuminate and turn off after approximately 20 seconds. The illumination of the needles gradually turns off after the ignition switch is turned from the “ON” position to the “LOCK” position.

Deactivated:

The needles do not illuminate when the driver’s door is opened while the ignition switch is in the “LOCK” position. The illumination of the needles turns off immediately after the ignition switch is turned from the “ON” position to the “LOCK” position.

NOTE

• Even during the illumination after the driver's door is opened, if the ignition switch is turned to the "ON" position, the combination meter will illuminate as usual.
• If the doors are locked by the remote keyless entry system during the illumination after the driver's door is opened, the illumination will be turned off.
• Even while the illumination gradually turns off after the ignition switch is turned to the "LOCK" position, if the ignition switch is turned to the "ON" position, the combination meter illuminate as usual.

To change the setting:

1. Turn the ignition switch to the "LOCK" or "Acc" position.

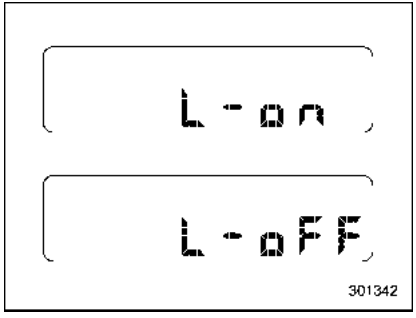

2. Press the trip knob to show "L-on" or "L oFF" on the odometer and trip meter display. The display can be switched as shown in the following illustration by pressing the trip knob.

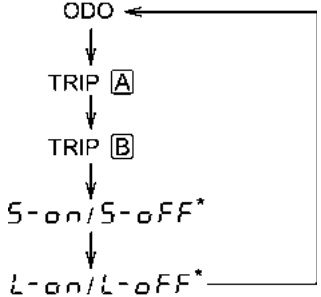

*: "S-on" or "S-oFF", and "L-on" or "L oFF" cannot be displayed when the ignition switch is in the "ON" position.

3. To change the current setting, press the trip knob for at least 2 seconds.

L-on : Activated
L oFF : Deactivated

NOTE

The initial illumination setting of the meter/gauge needles of your vehicle has been set for activation "L-on" at the time of shipment from the factory.

■ Speedometer

The speedometer shows the vehicle speed.

■ Odometer/Trip meter

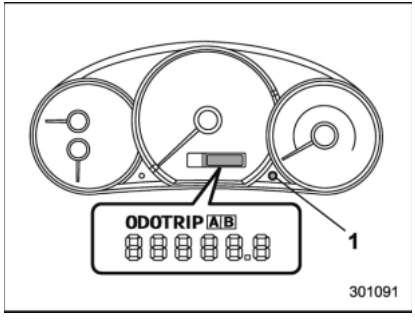

1) Trip knob

This meter displays the odometer and two trip meters when the ignition switch is in the "LOCK", "Acc" or "ON" position.

If you press the trip knob when the ignition switch is in the "LOCK" position, the odometer/trip meter will light up. It is possible to switch the indications while the odometer/trip meter is lit up. If you do not press the trip knob within 10 seconds of illumination of the odometer/trip meter, the odometer/trip meter will turn off.

– CONTINUED –

The display can be switched as shown in the following illustration by pressing the trip knob.

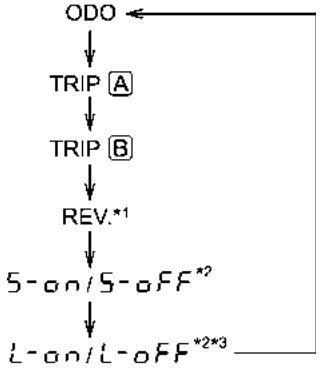

*1: STI only

*2: "S-on" or "S-oFF", and "L-on" or "L oFF" cannot be displayed when the ignition switch is in the "ON" position.

*3: Except STI

▼ **Odometer**

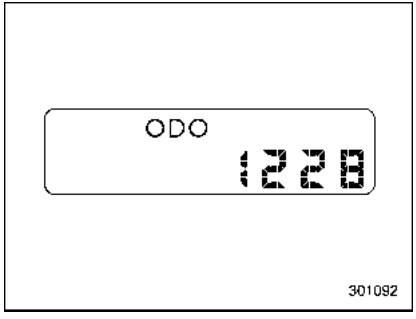

The odometer shows the total distance that the vehicle has been driven.

▼ **Double trip meter**

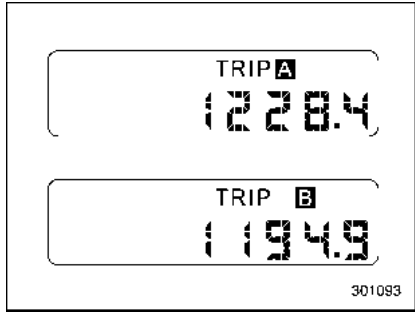

The trip meter shows the distance that the vehicle has been driven since you last set it to zero.

To set the trip meter to zero, select the A trip or B trip meter by pushing the knob and keep the knob pushed for more than 2 seconds.

⚠ CAUTION

To ensure safety, do not attempt to change the function of the indicator during driving, as an accident could result.

NOTE

If the connection between the combination meter and battery is broken for any reason such as vehicle maintenance or fuse replacement, the data recorded on the trip meter will be lost.

■ Tachometer

The tachometer shows the engine speed in thousands of revolutions per minute.

⚠ CAUTION

Do not operate the engine with the pointer of the tachometer in the red zone. This may cause severe damage to the engine.

■ Fuel gauge

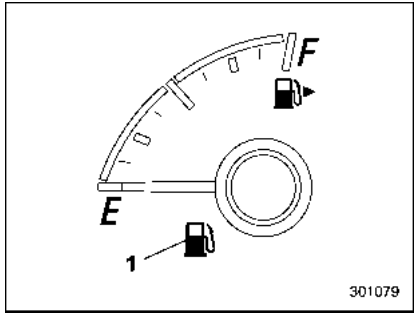

1) Low fuel warning light (Refer to "Low fuel warning light" ☞3-20.)

The fuel gauge shows the approximate amount of fuel remaining in the tank.

When the ignition switch is in the "LOCK" or "Acc" position, the fuel gauge shows "E" even if the fuel tank contains fuel.

The gauge may move slightly during braking, turning or acceleration due to fuel level movement in the tank.

If you press the trip knob while the ignition switch is in the "LOCK" or "Acc" position, the fuel gauge will light up and indicate the amount of fuel remaining in the tank.

If, while the fuel gauge is indicating the amount of fuel remaining in the tank, you (a) do not press the trip knob for 10 seconds or (b) open and close the driver's door, the fuel gauge indication will turn off.

NOTE

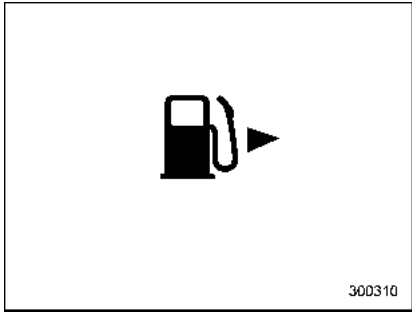

You will see the "⛽▶" sign in the fuel gauge meter.
This indicates that the fuel filler door (lid) is located on the right side of the vehicle.

– CONTINUED –

■ Temperature gauge

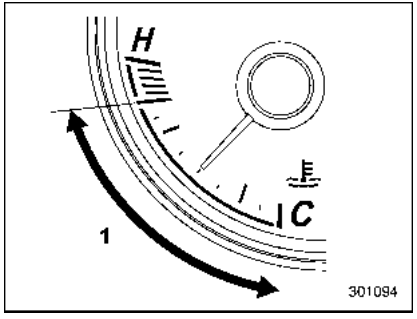

1) Normal operating range

The temperature gauge shows engine coolant temperature when the ignition switch is in the “ON” position.

The coolant temperature will vary in accordance with the outside temperature and driving conditions.

We recommend that you drive moderately until the pointer of the temperature gauge reaches near the middle of the range. Engine operation is optimum with the engine coolant at this temperature range and high revving operation when the engine is not warmed up enough should be avoided.

⚠ CAUTION

If the pointer exceeds the normal operating range, safely stop the vehicle as soon as possible.

Refer to “Engine overheating” ☞9-12.

REV indicator light and buzzer (STI)

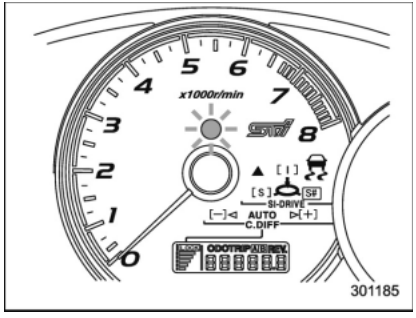

The REV alarm system has the following functions.

- When the engine speed reaches the level that was previously set, the REV indicator light illuminates to inform you. At this time, a buzzer also sounds if the buzzer setting is activated.
- Whenever the engine speed enters the red zone of the tachometer, the REV indicator light flashes.

If you press the trip knob, the odometer/trip meter will show the engine speed that has already been set.

NOTE

Even if the REV alarm system is not set, the REV indicator light will flash whenever the engine speed enters the red zone of the tachometer.

■ Setting the alarm-level engine speed

The alarm-level engine speed can be set (in 100 rpm steps) within the range from 2,000 rpm to 7,000 rpm as follows.

1. Push the trip knob to select “REV” on the combination meter.

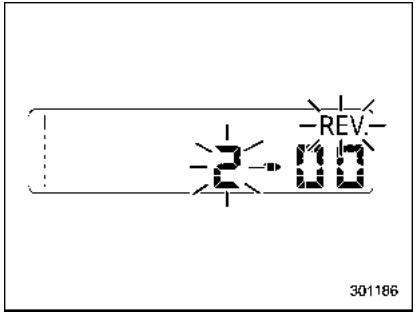

2. When the trip knob is pushed for more than 2 seconds, the thousands place flashes.

3. Release your finger from the trip knob once, then push and hold the trip knob again. The number will change sequentially from 2 to 7. Release your finger at the desired alarm-level engine speed.

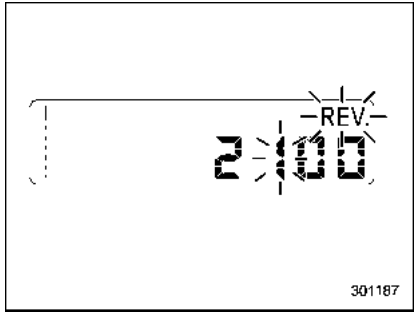

4. When the trip knob is pushed, the hundreds place flashes.

5. Release your finger from trip knob once, then push and hold the trip knob again. The number will change sequentially from 0 to 9. Release your finger at the desired alarm-level engine speed.

6. When the trip knob is pushed, the buzzer sounds and the REV alarm system will automatically enter its new setting mode (step 7 below), in which you can activate or deactivate the buzzer.

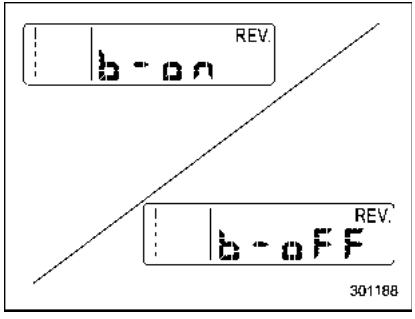

7. Every time that the trip knob is pushed and held, the buzzer changes to activate or deactivate.
b – on: Activated
b – off: Deactivated
When the mode is changed to “activate”, the buzzer sounds.

8. Push the trip knob to complete the setting procedure.

NOTE

- **The REV alarm system does not operate while settings are being entered.**
- **The speed-setting mode terminates if “--00” rpm is selected.**
- **The speed-setting mode is canceled if the ignition switch is turned from ON**

– CONTINUED –

to OFF, OFF to ON, or the vehicle starts moving before the setting procedure is finished.
• Setting the speed is impossible when the vehicle is moving.
• The set engine speed may differ from the engine speed shown by the tachometer. Use the engine speed shown by the tachometer as a rough guide.
• If the setting operation is performed with the engine switch turned off, the REV indicator light turns off and the setting operation is aborted when you have stopped the setting operation for approximately 10 seconds.
• If the setting operation is performed with the engine switch turned off, the REV indicator light turns off and the setting operation is aborted when you open and close the driver's door.

■ Deactivating the REV alarm system

To deactivate the REV indicator light and buzzer functions of the REV alarm system, set the thousands place of the alarm-level engine speed to "–".

Warning and indicator lights

Several of the warning and indicator lights illuminate momentarily and then turn off when the ignition switch is initially turned to the "ON" position. This permits checking the operation of the bulbs.
Apply the parking brake and turn the ignition switch to the "ON" position. For the system check, the following lights illuminate and turn off after several seconds or after the engine has started:

: Seatbelt warning light
(The seatbelt warning light turns off only when the driver fastens the seatbelt.)

: Front passenger's seatbelt warning light
(The seatbelt warning light turns off only when the front seat passenger fastens the seatbelt.)

AIR BAG: SRS airbag system warning light

ON / : Front passenger's frontal airbag ON indicator light

OFF / : Front passenger's frontal airbag OFF indicator light

CHECK ENGINE: CHECK ENGINE warning light/Malfunction indicator light

: Charge warning light

: Oil pressure warning light

R.DIFF TEMP: Rear differential oil temperature warning light (STI)

: Low tire pressure warning light (U.S.- spec. models)

ABS / : ABS warning light

BRAKE / : Brake system warning light

: Low fuel warning light

: Hill start assist warning light/Hill start assist OFF indicator light (STI)

: Door open warning light

: Vehicle Dynamics Control warning light/Vehicle Dynamics Control operation indicator light

: Vehicle Dynamics Control OFF indicator light/Traction Control OFF indicator light (STI)

CRUISE: Cruise control indicator light

SET: Cruise control set indicator light

: Shift-up indicator light (STI)

: REV indicator light (STI)

: Driver's control center differential indicator and warning lights (STI)

If any lights fail to illuminate, it indicates a burned-out bulb or a malfunction of the corresponding system.

Consult your authorized SUBARU dealer for repair.

■ Seatbelt warning light and chime

Your vehicle is equipped with a seatbelt warning device at the driver's and front passenger's seat, as required by current safety standards.

With the ignition switch turned to the "ON" position, this device reminds the driver and front passenger to fasten their seatbelts by illuminating the warning lights in the locations indicated in the following illustration and sounding a chime.

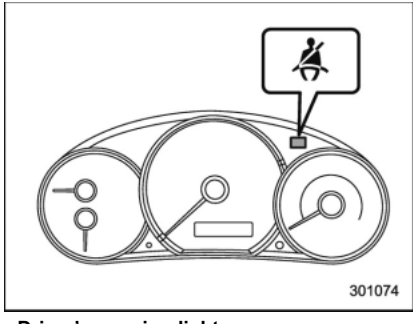

Driver's warning light

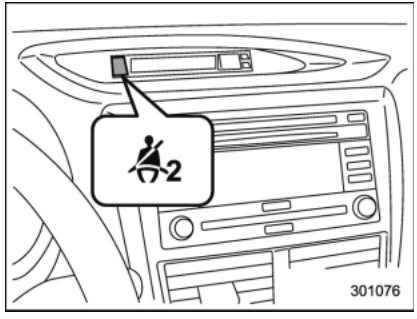

Front passenger's warning light

▼ Operation

If the driver and/or front passenger have/has not yet fastened the seatbelt(s) when the ignition switch is turned to the "ON" position, the seatbelt warning light(s) will flash for 6 seconds, to warn that the seatbelt(s) is/are unfastened. If the driver's seatbelt is not fastened, a chime will also sound simultaneously.

NOTE

• If the driver's and/or front passenger's seatbelt(s) are/is still not fastened 6 seconds later, the seatbelt warning device operates as follows according to the vehicle speed.

– At speeds lower than approximately 9 mph (15 km/h)

The warning light(s) for unfastened seatbelt(s) will alternate between steady illumination and flashing at 15-second intervals. The chime will not sound.

– At speeds higher than approximately 9 mph (15 km/h)

The warning light(s) for unfastened seatbelt(s) will alternate between flashing and steady illumination at 15-second intervals and the chime will sound while the warning light(s) is/are flashing.

• It is possible to cancel the warning operation that follows the 6-second warning after turning ON the ignition switch. When the ignition switch is turned ON next time, however, the complete sequence of the warning operation resumes. For further details about canceling the warning operation, please contact your SUBARU dealer.

If there is no passenger on the front passenger's seat, the seatbelt warning device for the front passenger's seat will be deactivated. The front passenger's occupant detection system monitors whether or not there is a passenger on the front passenger's seat.

Observe the following precautions. Failure to do so may prevent the device from functioning correctly or cause the device

– CONTINUED –

to fail.

- Do not install any accessory such as a table or TV onto the seatback.
- Do not store a heavy load in the seatback pocket.
- Do not allow the rear seat occupant to place his/her hands or legs on the front passenger's seatback, or allow him/her to pull the seatback.
- Do not use front seats with their backward-forward position and seatback not being locked into place securely. If any of them are not locked securely, adjust them again. For adjusting procedure, refer to "Front seats" ☞1-2.

If the seatbelt warning device for the front passenger's seat does not function correctly (e.g., it is activated even when the front passenger's seat is empty or it is deactivated even when the front passenger has not fastened his/her seatbelt), take the following actions.

- Ensure that no article is placed on the seat other than a child restraint system and its child occupant, although we strongly recommend that all children sit in the rear seat properly restrained.
- Ensure that there is no article left in the seatback pocket.
- Ensure that the backward-forward position and seatback of front passenger's seat are locked into place securely by moving the seat back and forth.

If still the seatbelt warning device for front passenger's seat does not function correctly after taking relevant corrective actions described above, immediately contact your SUBARU dealer for an inspection.

■ SRS airbag system warning light AIR BAG

⚠ WARNING

If the warning light exhibits any of the following conditions, there may be a malfunction in the seatbelt pretensioners and/or SRS airbag system. Immediately take your vehicle to your nearest SUBARU dealer to have the system checked. Unless checked and properly repaired, the seatbelt pretensioners and/or SRS airbag will not operate properly in the event of a collision, which may increase the risk of injury.

- **Flashing or flickering of the warning light**
- **No illumination of the warning light when the ignition switch is first turned to the "ON" position**
- **Continuous illumination of the warning light**
- **Illumination of the warning light while driving**

■ Front passenger's frontal airbag ON and OFF indicators

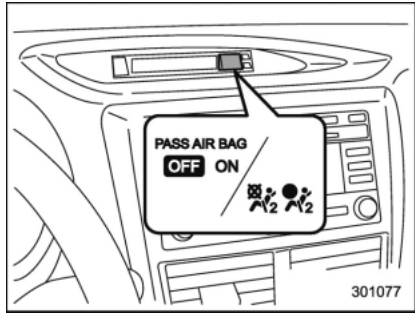

ON / : Front passenger's frontal airbag ON indicator

OFF / : Front passenger's frontal airbag OFF indicator

The front passenger's frontal airbag ON and OFF indicators show you the status of the front passenger's SRS frontal airbag.

The indicators are located next to the clock in the center portion of the dash-

board.

When the ignition switch is turned to the "ON" position, both the ON and OFF indicators illuminate for 6 seconds during which time the system is checked. Following the system check, both indicators turn off for 2 seconds. After that, one of the indicators illuminates depending on the status of the front passenger's SRS frontal airbag determined by the SUBARU advanced frontal airbag system monitoring.

If the front passenger's SRS frontal airbag is activated, the passenger's frontal airbag ON indicator will illuminate while the OFF indicator will remain off.

If the front passenger's SRS frontal airbag is deactivated, the passenger's frontal airbag ON indicator will remain off while the OFF indicator will illuminate.

With the ignition switch turned to the "ON" position, if both the ON and OFF indicators remain illuminated or off simultaneously even after the system check period, the system is malfunctioning. Contact your SUBARU dealer immediately for an inspection.

■ CHECK ENGINE warning light/Malfunction indicator light

CHECK ENGINE

⚠ CAUTION

If the CHECK ENGINE light illuminates while you are driving, have your vehicle checked/repaired by your SUBARU dealer as soon as possible. Continued vehicle operation without having the emission control system checked and repaired as necessary could cause serious damage, which may not be covered by your vehicle's warranty.

If this light illuminates steadily or blinks while the engine is running, it may indicate that there is a problem or potential problem somewhere in the emission control system.

▼ If the light illuminates steadily

If the light illuminates steadily while driving or does not turn off after the engine starts, an emission control system malfunction has been detected.

You should have your vehicle checked by an authorized SUBARU dealer immediately.

NOTE

This light also illuminates when the fuel filler cap is not tightened until it clicks.

If you have recently refueled your vehicle, the cause of the CHECK ENGINE warning light/malfunction indicator light illuminating could be a loose or missing fuel filler cap. Remove the cap and retighten it until it clicks. Make sure nothing is interfering with the sealing of the cap. Tightening the cap will not make the CHECK ENGINE warning light turn off immediately. It may take several driving trips. If the light does not turn off, take your vehicle to your authorized SUBARU dealer immediately.

▼ If the light is blinking

If the light is blinking while driving, an engine misfire condition has been detected which may damage the emission control system.

To prevent serious damage to the emission control system, you should do the following.

- Reduce vehicle speed.
- Avoid hard acceleration.
- Avoid steep uphill grades.
- Reduce the amount of cargo, if possible.

– CONTINUED –

The CHECK ENGINE warning light may stop blinking and illuminate steadily after several driving trips. You should have your vehicle checked by an authorized SUBARU dealer immediately.

■ Charge warning light



If this light illuminates when the engine is running, it may indicate that the charging system is not working properly.

If the light illuminates while driving or does not turn off after the engine starts, stop the engine at the first safe opportunity and check the alternator belt. If the belt is loose, broken or if the belt is in good condition but the light remains illuminated, contact your nearest SUBARU dealer immediately.

■ Oil pressure warning light



If this light illuminates when the engine is running, it may indicate that the engine oil pressure is low and the lubricating system is not working properly.

If the light illuminates while driving or does not turn off after the engine starts, stop the engine at the first safe opportunity and check the engine oil level. If the oil level is low, add oil immediately. If the engine oil is at the proper level but the light remains illuminated, contact your nearest SUBARU dealer immediately.

For details about checking the engine oil level or adding the engine oil, refer to “Engine oil” ☞11-8.

⚠ CAUTION

Do not operate the engine with the oil pressure warning light illuminated. This may cause serious engine damage.

■ Rear differential oil temperature warning light (STI)

R.DIFF TEMP

⚠ CAUTION

If the R.DIFF TEMP warning light illuminates, reduce vehicle speed and stop the vehicle in a safe location as soon as possible. Continuing to drive with this light illuminated may damage the rear differential and other parts of the powertrain.

If this light illuminates when the engine is running, it may indicate that the rear differential oil temperature is too hot.

At this time, the driver’s control center differential will automatically cancel the current torque-distribution ratio setting and adopt its minimum ratio.

If the light illuminates while driving, reduce vehicle speed and stop the vehicle in the nearest safe location. Park the vehicle for several minutes. After the light turns off, you can start driving.

If the light does not turn off, contact the nearest SUBARU dealer for service.

NOTE

- **If the tire pressures are not correct and/or the tires are not all the same size and brand, the rear differential will be heavily loaded when the vehicle is driven, resulting in an abnormally high oil temperature.**
- **The rear differential oil will deteriorate if its temperature increases enough for the rear differential oil temperature warning light to illuminate. It is advisable to have the rear differential oil replaced as soon as possible.**

■ Low tire pressure warning light (U.S.-spec. models)



When the ignition switch is turned to the “ON” position, the low tire pressure warning light will illuminate for approximately 2

seconds to check that the tire pressure monitoring system (TPMS) is functioning properly. If there is no problem and all tires are properly inflated, the light will turn off.

Each tire, including the spare (if provided), should be checked monthly when cold and inflated to the inflation pressure recommended by the vehicle manufacturer on the vehicle placard or tire inflation pressure label. (If your vehicle has tires of a different size than the size indicated on the vehicle placard or tire inflation pressure label, you should determine the proper tire inflation pressure for those tires.)

As an added safety feature, your vehicle has been equipped with a tire pressure monitoring system (TPMS) that illuminates a low tire pressure telltale when one or more of your tires is significantly underinflated. Accordingly, when the low tire pressure telltale illuminates, you should stop and check your tires as soon as possible, and inflate them to the proper pressure. Driving on a significantly underinflated tire causes the tire to overheat and can lead to tire failure. Under-inflation also reduces fuel efficiency and tire tread life, and may affect the vehicle's handling and stopping ability.

Please note that the TPMS is not a substitute for proper tire maintenance, and it is the driver's responsibility to maintain correct tire pressure, even if under-inflation has not reached the level to trigger illumination of the TPMS low tire pressure telltale.

Your vehicle has also been equipped with a TPMS malfunction indicator to indicate when the system is not operating properly. The TPMS malfunction indicator is combined with the low tire pressure telltale. When the system detects a malfunction, the telltale will flash for approximately one minute and then remain continuously illuminated. This sequence will continue upon subsequent vehicle start-ups as long as the malfunction exists. When the malfunction indicator is illuminated, the system may not be able to detect or signal low tire pressure as intended. TPMS malfunctions may occur for a variety of reasons, including the installation of replacement or alternate tires or wheels on the vehicle that prevent the TPMS from functioning properly. Always check the TPMS malfunction telltale after replacing one or more tires or wheels on your vehicle to ensure that the replacement or alternate tires and wheels allow the TPMS to continue to function properly.

Should the warning light illuminate steadily after blinking for approximately one minute, have the system inspected by your nearest SUBARU dealer as soon as possible.

⚠ WARNING

If this light does not illuminate briefly after the ignition switch is turned ON or the light illuminates steadily after blinking for approximately one minute, you should have your Tire Pressure Monitoring System checked at a SUBARU dealer as soon as possible.

If this light illuminates while driving, never brake suddenly and keep driving straight ahead while gradually reducing speed. Then slowly pull off the road to a safe place. Otherwise an accident involving serious vehicle damage and serious personal injury could occur.

If this light still illuminates while driving after adjusting the tire pressure, a tire may have significant damage and a fast leak that causes the tire to lose air rapidly. If you have a flat tire, replace it with a spare tire as soon as possible.

When a spare tire is mounted or a wheel rim is replaced without the original pressure sensor/transmitter being transferred, the Low tire pres-

– CONTINUED –

sure warning light will illuminate steadily after blinking for approximately one minute. This indicates the TPMS is unable to monitor all four road wheels. Contact your SUBARU dealer as soon as possible for tire and sensor replacement and/or system resetting.

If the light illuminates steadily after blinking for approximately one minute, promptly contact a SUBARU dealer to have the system inspected.

⚠ CAUTION

The tire pressure monitoring system is NOT a substitute for manually checking tire pressure. The tire pressure should be checked periodically (at least monthly) using a tire gauge. After any change to tire pressure(s), the tire pressure monitoring system will not re-check tire inflation pressures until the vehicle is first driven more than 20 mph (32 km/h). After adjusting the tire pressures, increase the vehicle speed to at least 20 mph (32 km/h) to start the TPMS re-checking of the tire inflation pressures. If the tire pressures are now above the severe low pressure threshold, the low tire pressure warning light should turn off a few minutes later. Therefore, be sure to install the specified size for the front and rear tires.

■ ABS warning light ABS / (ABS)

⚠ CAUTION

- **If any of the following conditions occur, we recommend that you have the ABS system repaired at the first available opportunity by your SUBARU dealer.**
  - **The warning light does not illuminate when the ignition switch is turned to the "ON" position.**
  - **The warning light illuminates when the ignition switch is turned to the "ON" position, but it does not turn off even when the vehicle speed exceeds approximately 8 mph (12 km/h).**
  - **The warning light illuminates during driving.**
- **When the warning light is on (and the brake system warning light is off), the ABS function shuts down. However, the conventional brake system continues to operate normally.**

With a vehicle equipped with an EBD system, the ABS warning light illuminates together with the brake system warning light if the EBD system malfunctions. For further details of the EBD system malfunction warning, refer to "Electronic Brake Force Distribution (EBD) system warning" ☞3-19.

NOTE

If the warning light behavior is as described in the following conditions, the ABS system may be considered normal.

- **The warning light illuminates right after the engine is started but turns off immediately, remaining off.**
- **The warning light remains illuminated after the engine has been started, but it turns off when the vehicle speed reaches approximately 8 mph (12 km/h).**
- **The warning light illuminates during driving, but it turns off immediately and remains off.**

When driving with an insufficient battery voltage such as when the engine is jump started, the ABS warning light may illuminate. This is due to the low battery voltage

and does not indicate a malfunction. When the battery becomes fully charged, the light will turn off.

■ Brake system warning light

BRAKE / (!)

⚠ WARNING

- **Driving with the brake system warning light on is dangerous. This indicates your brake system may not be working properly. If the light remains illuminated, have the brakes inspected by a SUBARU dealer immediately.**
- **If at all in doubt about whether the brakes are operating properly, do not drive the vehicle. Have your vehicle towed to the nearest SUBARU dealer for repair.**

This light has the following functions.

▼ Parking brake warning

The light illuminates with the parking brake applied while the ignition switch is in the “ON” position. It turns off when the parking brake is fully released.

▼ Brake fluid level warning

This light illuminates when the brake fluid level has dropped to near the “MIN” level of the brake fluid reservoir with the ignition switch in the “ON” position and with the parking brake fully released.

If the brake system warning light should illuminate while driving (with the parking brake fully released and with the ignition switch positioned in “ON”), it could be an indication of leaking of brake fluid or worn brake pads. If this occurs, immediately stop the vehicle at the nearest safe place and check the brake fluid level. If the fluid level is below the “MIN” mark in the reservoir, do not drive the vehicle. Have the vehicle towed to the nearest SUBARU dealer for repair.

▼ Electronic Brake Force Distribution (EBD) system warning

The brake system warning light also illuminates if a malfunction occurs in the EBD system. In that event, it illuminates together with the ABS warning light.

The EBD system may be malfunctioning if the brake system warning light and ABS warning light illuminate simultaneously during driving.

Even if the EBD system fails, the conventional braking system will still function. However, the rear wheels will be more prone to locking when the brakes are applied harder than usual and the vehicle’s motion may therefore become somewhat harder to control.

If the brake system warning light and ABS warning light illuminate simultaneously, take the following steps.

1. Stop the vehicle in the nearest safe, flat place.
2. Shut down the engine, apply the parking brake and then restart it.
3. Release the parking brake. If both warning lights turn off, the EBD system may be malfunctioning. Drive carefully to the nearest SUBARU dealer and have the system inspected.
4. If both warning lights illuminate again and remain illuminated after the engine has been restarted, shut down the engine again, apply the parking brake, and check the brake fluid level.
5. If the brake fluid level is not below the “MIN” mark, the EBD system may be malfunctioning. Drive carefully to the nearest SUBARU dealer and have the system inspected.
6. If the brake fluid level is below the “MIN” mark, DO NOT drive the vehicle. Instead, have the vehicle towed to the nearest SUBARU dealer for repair.

– CONTINUED –

■ Low fuel warning light



The low fuel warning light illuminates when the tank is nearly empty (approximately 2.6 US gal [10.0 liters, 2.2 Imp gal]). It only operates when the ignition switch is in the "ON" position. When this light illuminates, fill the fuel tank immediately.

⚠ CAUTION

Promptly put fuel in the tank whenever the low fuel warning light illuminates. Engine misfires as a result of an empty tank could cause damage to the engine.

NOTE

This light does not turn off unless the tank is replenished up to an internal fuel quantity of approximately 3.7 US gal (14 liters, 3.1 Imp gal).

■ Hill start assist warning light/Hill start assist OFF indicator light (STI)



▼ Hill start assist warning light

While the engine is running, if there are any malfunctions in the Hill start assist system, the light will illuminate.

⚠ WARNING

When the Hill start assist warning light illuminates, have the vehicle inspected at an authorized SUBARU dealer.

▼ Hill start assist OFF indicator light (STI)

While the Hill start assist system is deactivated, the Hill start assist OFF indicator light illuminates continuously to inform the driver that the Hill start assist system is not operational.

■ Door open warning light



The door open warning light illuminates if any door or the rear gate is not fully closed.

Always make sure this light is not illuminated before you start to drive.

■ Vehicle Dynamics Control warning light/ Vehicle Dynamics Control operation indicator light



▼ Vehicle Dynamics Control warning light

⚠ CAUTION

The Vehicle Dynamics Control system provides its ABS control through the electrical circuit of the ABS system. Accordingly, if the ABS is inoperative, the Vehicle Dynamics Control system becomes unable to provide ABS control. As a result, the Vehicle Dynamics Control system becomes inoperative, causing the warning light to illuminate. Although both the Vehicle Dynamics Control and ABS systems are inoperative in this case, the ordinary functions of the brake system are still available. You will be safe while driving in this condition, but drive carefully and have your vehicle checked at a SUBARU dealer as soon as possible.

NOTE

• If the electrical circuit of the Vehicle Dynamics Control system itself malfunctions, only this particular warning light illuminates. Under these circumstances, the ABS (Anti-lock Brake System) remains fully operational.

• The warning light illuminates when the electronic control system of the ABS/Vehicle Dynamics Control system malfunctions.

The Vehicle Dynamics Control system is probably inoperative under any of the following conditions. Have your vehicle checked at a SUBARU dealer immediately.

• The warning light does not illuminate when the ignition switch is turned to the "ON" position.

• The warning light illuminates while the vehicle is running.

NOTE

If the warning light behavior is as described in the following examples, the Vehicle Dynamics Control system may be considered to be operating normally.

• The warning light illuminates right after the engine is started but turns off immediately and remains off.

• The warning light illuminates after the engine has started and turns off while the vehicle is subsequently being driven.

• The warning light illuminates during driving, but turns off immediately and remains off.

▼ Vehicle Dynamics Control operation indicator light

The indicator light flashes during activation of the skid suppression function and during activation of the traction control function.

NOTE

• The light may remain illuminated for a short period of time after the engine has been started, especially in cold weather. This does not indicate the existence of a problem. The light should turn off as soon as the engine has warmed up.

• The indicator light illuminates when the engine has developed a problem and the CHECK ENGINE warning light/malfunction indicator light is on.

The Vehicle Dynamics Control system is probably malfunctioning under the following condition. Have your vehicle checked at a SUBARU dealer as soon as possible.

• The light does not turn off even after the engine has warmed up for several minutes after it was started.

■ Vehicle Dynamics Control OFF indicator light/Traction Control OFF indicator light (STI)

This light has the function of indicating the following conditions.

• The Vehicle Dynamics Control system has been deactivated (all models).

• Only the Traction control system has been deactivated (STI).

The light illuminates under the following conditions.

• The Vehicle Dynamics Control system is not operating (all models).

• Only the Traction Control system is not operating (STI).

STI:

This light illuminates in yellow for approximately 1 second when the ignition switch is turned to the "ON" position. After that, the light changes to green and remains illuminated in green for 1 second, and then turns off. It indicates that the Vehicle Dynamics Control system is operating normally.

– CONTINUED –

The indicator light shows the activated/deactivated conditions as follows.

		Activated/deactivated status for each function		
		Traction Control	Vehicle Dynamics Control system	ABS
Indicator light	Turn off	Activated	Activated	Activated
	OFF (Illuminates in green)*	Deactivated	Activated	Activated
	OFF (Illuminates in yellow)	Deactivated	Deactivated	Activated

*: STI only

For details about the Traction Control and Vehicle Dynamics Control system, refer to “Vehicle Dynamics Control system” ☞7-28.

▼ Vehicle Dynamics Control OFF indicator light (yellow)

- This light illuminates when the Vehicle Dynamics Control OFF switch is pressed (except STI).
- This light illuminates when the Vehicle Dynamics Control OFF switch is pressed for more than 2 seconds (STI).
- The light illuminates when the Vehicle Dynamics Control system is deactivated.

NOTE

- **The light may remain illuminated for a while after the engine has been started, especially in cold weather. This does not indicate the existence of a problem. The light should turn off as soon as the engine has warmed up.**
- **The indicator light illuminates when the engine has developed a problem and the CHECK ENGINE warning light/ malfunction indicator light is on.**

The Vehicle Dynamics Control system is probably malfunctioning under the following conditions. Have your vehicle checked at a SUBARU dealer as soon as possible.

- The light does not illuminate when the ignition switch is turned to the “ON” position.
- The light does not turn off even after the lapse of several minutes (the engine

has warmed up) after the engine has started.

▼ **Traction Control OFF indicator light (green – STI)**

The light illuminates when the Vehicle Dynamics Control OFF switch is pressed briefly to select the traction mode. For details, refer to “Traction mode” ☞7-30.

■ Security indicator light SECURITY

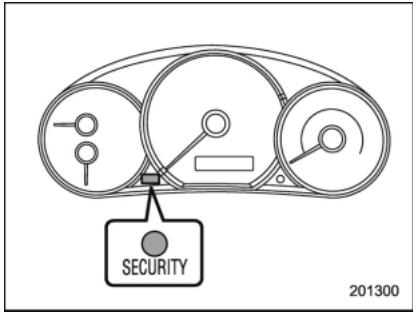

The security indicator light deters potential thieves by indicating that the vehicle is equipped with an immobilizer system. It begins flashing (approximately once every 3 seconds) approximately 60 seconds after the ignition switch is turned from the “ON” position to the “Acc” or “LOCK” position or immediately after the key is pulled out.

If the security indicator light does not flash, the immobilizer system may not be functioning properly. If this occurs, contact your SUBARU dealer as soon as possible.

In case an unauthorized key is used (e.g., an imitation key), the security indicator light illuminates.

NOTE

• For the flashing pattern when arming the alarm system, refer to “Arming the system” ☞2-16.

• Even if the security indicator light flashes irregularly or its fuse blows (the light does not flash if its fuse is blown), the immobilizer system will function normally.

■ SI-DRIVE indicator light (STI)

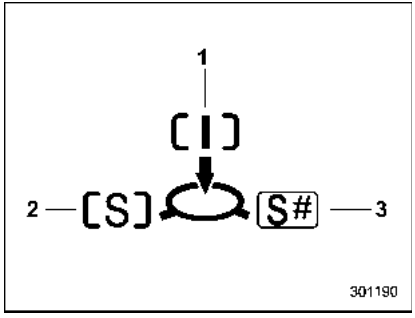

1) Intelligent (I) mode
2) Sport (S) mode
3) Sport Sharp (S#) mode

This light indicates the current SI-DRIVE mode.

For details of SI-DRIVE mode, refer to “SI-DRIVE (STI)” ☞7-22.

■ Shift-up indicator light (STI)

While selecting the Intelligent (I) mode of SI-DRIVE, this indicator light illuminates and informs the driver about the upshift timing for fuel-efficient driving.

– CONTINUED –

■ Turn signal indicator lights

These lights show the operation of the turn signal or lane change signal.

If the indicator lights do not blink or blink rapidly, the turn signal bulb may be burned out. Replace the bulb as soon as possible. Refer to “Replacing bulbs” ☞11-39.

■ High beam indicator light

This light shows that the headlights are in the high beam mode.

This indicator light also illuminates when the headlight flasher is operated.

■ Cruise control indicator light

This light illuminates when the “CRUISE” main switch is pressed to activate the cruise control function.

⚠ CAUTION

If the CHECK ENGINE warning light/ malfunction indicator light illuminates, the cruise control indicator light flashes at the same time. At this time, avoid driving at high speed and have your vehicle inspected at a SUBARU dealer as soon as possible.

NOTE

If you press the “CRUISE” main switch button while turning the ignition switch “ON”, the cruise control function is deactivated and the cruise control indicator light flashes. To reactivate the cruise control function, turn the ignition switch back to the “Acc” or “LOCK” position, and then turn it again to the “ON” position.

■ Cruise control set indicator light

This light illuminates when vehicle speed has been set to use the cruise control function.

■ Front fog light indicator light (if equipped)

This indicator light illuminates while the front fog lights are illuminated.

■ Headlight indicator light

This indicator light illuminates when the headlight switch is placed in the “” or “” position.

■ Driver’s control center differential auto indicator light (STI)

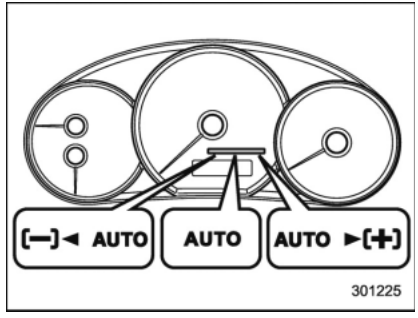

This light functions while the ignition switch is “ON”. When illuminated, it indicates that the driver’s control center differential is set to the auto mode. It turns off when the driver’s control center differential is set to the manual mode. For details, refer to “Driver’s Control Center Differential (DCCD) (STI)” ☞7-18.

▼ Driver’s control center differential auto [+] indicator light

When the AUTO [+] mode is set, the AUTO [+] indicator light illuminates.

For details, refer to “Driver’s Control Center Differential (DCCD) (STI)” ☞7-18.

▼ **Driver’s control center differential auto [–] indicator light** [–]◄AUTO

When the AUTO [–] mode is set, the AUTO [–] indicator light illuminates.
For details, refer to “Driver’s Control Center Differential (DCCD) (STI)” ☞7-18.

■ Driver’s control center differential indicator and warning lights (STI)

▼ **Indicator lights**

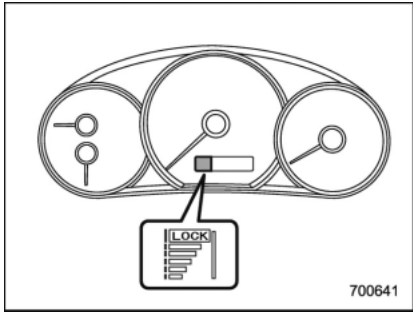

When you select the manual mode of the driver’s control center differential, the initial limited slip differential (LSD) torque that is currently selected for the center differential is indicated by the illumination of these indicator lights.

▼ **Warning light**

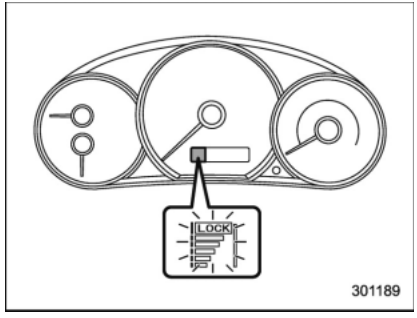

All the indicator lights will flash in the event that the driver’s control center differential has a malfunction. Have the vehicle inspected by your SUBARU dealer. For details, refer to “Driver’s Control Center Differential (DCCD) (STI)” ☞7-18.

■ REV indicator light (STI)

This indicator light illuminates when the engine speed reaches the level that was previously set. This indicator light also flashes when the tachometer needle enters the red zone. For details, refer to “REV indicator light and buzzer (STI)” ☞3-10.

Clock

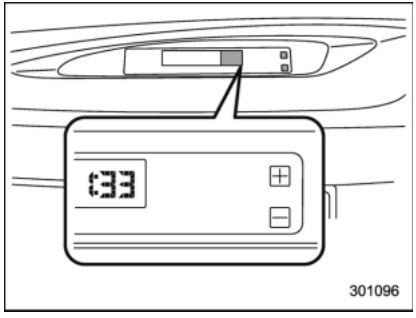

The time changes by 1 minute each time the “+” button or “–” button is pressed. Pressing the “+” button moves the displayed time forward, while pressing the “–” button moves the displayed time back. Pressing and holding either button changes the displayed time continuously.

⚠ CAUTION

To ensure safety, do not attempt to set the time while driving, as an accident from inadequate attention to the road could result.

NOTE

If the battery is disconnected, the time will be erased. After reconnecting the battery, set the correct time.

Information display

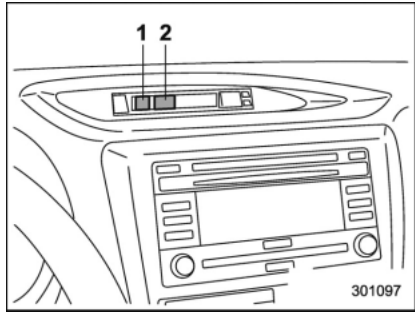

1) Outside temperature indicator
2) Fuel consumption indicator

With the ignition switch in the “ON” position, the outside temperature indicator and fuel consumption indicator appear on the display.

The fuel consumption indicator is linked with the odometer/trip meter display on the combination meter, according to the following chart.

Odometer/Trip meter	Fuel consumption indicator
A trip meter	Average fuel consumption corresponding to the A trip meter
B trip meter	Average fuel consumption corresponding to the B trip meter
Odometer	U.S-spec. models: Not indicated
	Other models: Current fuel consumption

■ Outside temperature indicator

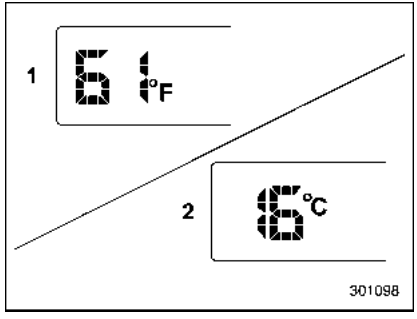

1) U.S.-spec. models
2) Except U.S.-spec. models

The outside temperature indicator shows the outside temperature in a range from −22 to 122°F (−30 to 50°C).

The indicator can give a false reading under any of the following conditions:

- When there is too much sun.
- During idling; while running at low speeds in a traffic jam; when the engine is restarted immediately following a shutdown.
- When the actual outside temperature falls outside the specified indicator range.

▼ Road surface freeze warning indication

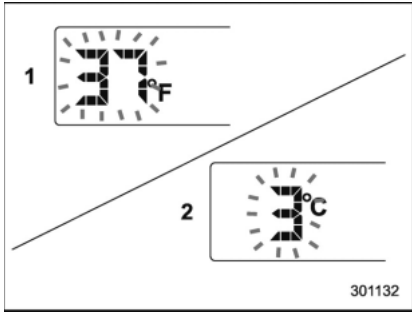

1) U.S.-spec. models
2) Except U.S.-spec. models

When the outside temperature drops to 37°F (3°C) or lower, the temperature indication flashes to show that the road surface may be frozen.

If the outside temperature drops to 37°F (3°C) or lower while the display is giving an indication other than the outside temperature, the display switches to the outside temperature indication and flashes for 5 seconds before returning to its original indication.

If the display is already indicating an outside temperature of 37°F (3°C) or lower when the ignition switch is turned to the

– CONTINUED –

"ON" position, the indication does not flash.

NOTE

The outside temperature indication may differ from the actual outside temperature. The road surface freeze warning indication should be treated only as a guide. Be sure to check the condition of the road surface before driving.

■ Current fuel consumption (if equipped)

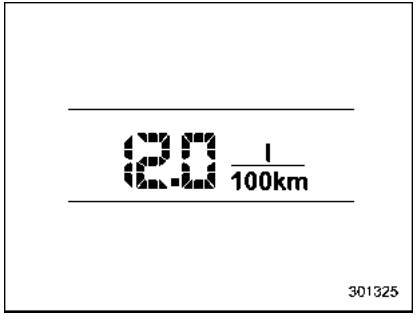

This display shows the rate of fuel consumption at the present moment.

■ Average fuel consumption

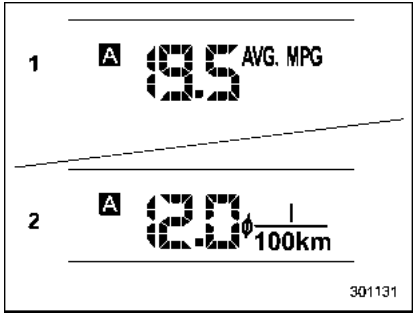

1) U.S.-spec. models
2) Except U.S.-spec. models

This display shows the average rate of fuel consumption since the trip meter was last reset.

When either of the trip meter displays is reset, the corresponding average fuel consumption value is also reset.

NOTE

• The indicated values vary in accordance with changes in the vehicle's running conditions. Also, the indicated values may differ slightly from the actual values and should thus be treated only as a guide.

• After either trip meter display is reset, the average fuel consumption corresponding to that trip meter display is not shown until the vehicle has subsequently covered a distance of 1 mile (or 1 km).

■ Turn off display of fuel consumption indicator

The display of the fuel consumption indicator can be turned off.

To turn off the display of the indicator, turn the ignition switch to the "LOCK" position and press the "+" button adjacent to the information display for approximately 5 seconds. Then, the information display and the clock display will blink for 3 seconds to notify that the display of the fuel consumption has been turned off.

To restore the indicator, once again press the "+" button for approximately 5 seconds.

NOTE

• The initial display setting of the fuel consumption indicator of your vehicle has been set to operational at the time of shipment from the factory.

• The average fuel consumption is calculated even while the indicator is not displayed.

• Even if you turn off the fuel consumption indicator, the fuel consumption indicator will automatically turn on

when the battery voltage is disconnected and then reconnected for battery replacement or fuse replacement.

Light control switch

The light control switch operates when the key is inserted into the ignition switch.

Regardless of the position of the light control switch, the illuminated lights are turned off when the key is removed from the ignition switch.

NOTE

Even if the key is removed from the ignition switch, the lights can be illuminated by operating the light control switch from "OFF" to the "≡D◇E" or "≡D" position. In this case, if the driver's door is opened, a chirp sound will inform the driver that the lights are illuminated.

⚠ CAUTION

- **Use of any lights for a long period of time while the engine is not running can cause the battery to discharge.**
- **Before leaving the vehicle, make sure that the light control switch is turned to the "OFF" position. If the vehicle is left unattended for a long time with the light control switch set to a position other than "OFF", the battery may be discharged.**

■ Headlights

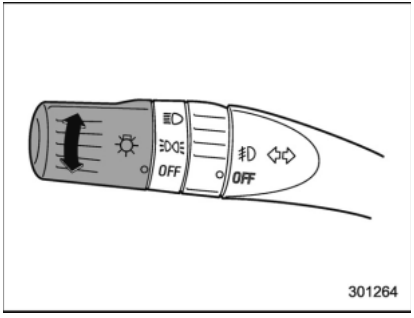

To turn on the headlights, turn the knob on the end of the turn signal lever.

"≡D" position

Instrument panel illumination, headlights, front side marker lights, rear side marker lights, tail lights and license plate lights are on.

"≡D◇E" position

Instrument panel illumination, front side marker lights, rear side marker lights, tail lights and license plate lights are on.

– CONTINUED –

■ High/low beam change (dimmer)

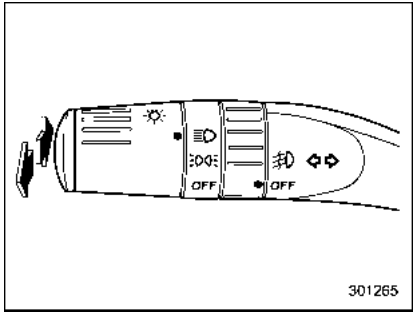

To change from low beam to high beam, push the turn signal lever forward. When the headlights are on high beam, the high beam indicator light "≡D" on the combination meter also illuminates.

To switch back to low beam, pull the lever back to the center position.

■ Headlight flasher

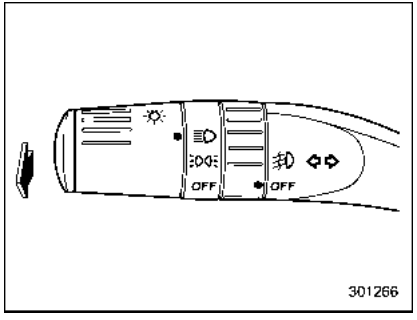

To flash the headlights, pull the lever toward you and then release it. The high beam will remain on for as long as you hold the lever. The headlight flasher works even though the light switch is in the "OFF" position.

When the headlights are on high beam, the high beam indicator light "≡D" on the combination meter also illuminates.

⚠ CAUTION

Do not hold the lever in the flashing position for more than just a few seconds.

■ Daytime running light system

⚠ WARNING

The brightness of the illumination of the high beam headlights is reduced by the daytime running light system. The light switch must always be turned to the "≡D" position when it is dark outside.

The high beam headlights will automatically illuminate at reduced brightness when the engine has started, under the following conditions:

- The parking brake is fully released.
- The light switch is in the "OFF" or "≡D" position.

NOTE

When the light switch is in the "≡D" position, the front side marker lights, tail lights and license plate lights are illuminated.

Turn signal lever

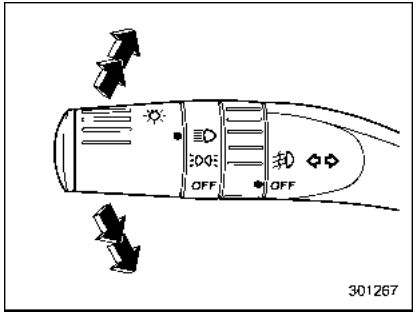

To activate the right turn signal, push the turn signal lever up. To activate the left turn signal, push the turn signal lever down. When the turn is finished, the lever will return automatically. If the lever does not return after cornering, return the lever to the neutral position by hand.

To signal a lane change, push the turn signal lever up or down slightly and hold it during the lane change. The turn signal indicator lights will flash in the direction of the turn or lane change. The lever will return automatically to the neutral position when you release it.

Illumination brightness control

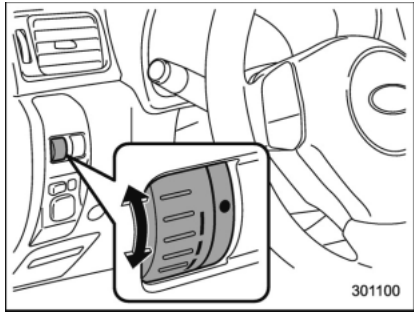

The brightness of clock display, audio, air conditioner, information display and instrument panel illumination dims when the light switch is in the "≡D◁≡" or "≡D" positions. You can adjust brightness of the instrument panel illumination for better visibility.

You can also adjust the brightness of the instrument panel illumination when the lighting switch is in the "OFF" position.

To brighten, turn the control dial upward.

To darken, turn the control dial downward.

NOTE

When the control dial is turned fully upward, the illumination brightness becomes the maximum and the automatic dimming function does not work at all.

Headlight beam leveler (if equipped)

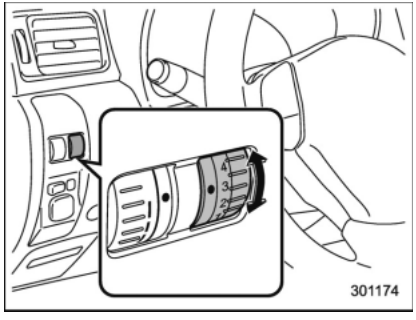

The vehicle has High-Intensity Discharge (HID) headlights on the low beam setting. The HID headlights generate more light than conventional halogen headlights. Therefore a driver of an oncoming vehicle may experience too much glare when your headlight beam height adjustment is high due to the vehicle carrying a heavy load.

The headlight beam leveler can be used to adjust beam height to avoid such a condition.

Adjust the headlight beam level with the following dial positions according to the number of passengers and load condition.

Dial position	Number of front seat occupants	Number of rear seat occupants	Load in the luggage compartment area
0	1 or 2	0	No load
1	2	3	No load
2	2	3	Full load*
	1	0	Full load*
3	Not applicable	Not applicable	Not applicable
4	Not applicable	Not applicable	Not applicable
5	Not applicable	Not applicable	Not applicable

*: Up to maximum permissible weight

Front fog light switch (if equipped)

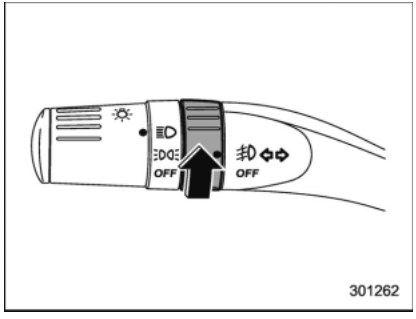

The front fog lights operate only when the light switch is in the "≡D" position.

However, the front fog lights turn off when the headlights are switched to high beam.

To turn on the front fog lights, turn the front fog light switch on the turn signal lever upward to the "≢D" position. To turn off the front fog lights, turn the switch back down to the "OFF" position.

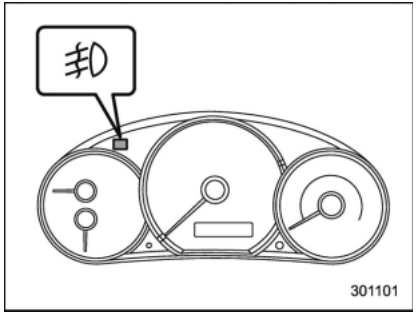

The indicator light on the combination meter will illuminate when the front fog lights are illuminated.

Wiper and washer

⚠ WARNING

In freezing weather, do not use the windshield washer until the windshield is sufficiently warmed by the defroster.

Otherwise the washer fluid can freeze on the windshield, blocking your view.

⚠ CAUTION

- **Do not operate the washer continuously for more than 10 seconds, or when the washer fluid tank is empty. This may cause overheating of the washer motor. Check the washer fluid level frequently, such as at fuel stops.**
- **Do not operate the wipers when the windshield or rear window is dry. This may scratch the glass, damage the wiper blades and cause the wiper motor to burn out. Before operating the wiper on a dry windshield or rear window, always use the windshield washer.**

- In freezing weather, be sure that the wiper blades are not frozen to the windshield or rear window before switching on the wipers. Attempting to operate the wiper with the blades frozen to the window glass could cause not only the wiper blades to be damaged but also the wiper motor to burn out. If the wiper blades are frozen to the window glass, be sure to operate the defroster, windshield wiper deicer (if equipped) or rear window defogger before turning on the wiper.
- If the wipers stop during operation because of ice or some other obstruction on the window, the wiper motor could burn out even if the wiper switch is turned off. If this occurs, promptly stop the vehicle in a safe place, turn the ignition switch to the "LOCK" position and clean the window glass to allow proper wiper operation.
- Use clean water if windshield washer fluid is unavailable. In areas where water freezes in winter, use SUBARU Windshield Washer Fluid or the equivalent. Refer to "Windshield washer fluid" ☞11-31.

  Also, when driving the vehicle when there are freezing temperatures, use non-freezing type wiper blades.
- Do not clean the wiper blades with gasoline or a solvent, such as paint thinner or benzine. This will cause deterioration of the wiper blades.

NOTE

- The wiper operates only when the ignition switch is in the "ON" or "Acc" position.
- The front wiper motor is protected against overloads by a circuit breaker. If the motor operates continuously under an unusually heavy load, the circuit breaker may trip to stop the motor temporarily. If this happens, park your vehicle in a safe place, turn off the wiper switch, and wait for approximately 10 minutes. The circuit breaker will reset itself, and the wipers will again operate normally.
- Clean your wiper blades and window glass periodically with a washer solution to prevent streaking, and to remove accumulations of road salt or road film. Operate the windshield washer for at least 1 second so that washer solution will be sprinkled all over the windshield or rear window.
- Grease, wax, insects or other material on the windshield or the wiper blade results in jerky wiper operation and streaking on the glass. If you cannot remove those streaks after operating the washer or if the wiper operation is jerky, clean the outer surface of the windshield or rear window and the wiper blades using a sponge or soft cloth with a neutral detergent or mild-abrasive cleaner. After cleaning, rinse the window glass and wiper blades with clean water. The glass is clean if no beads form on the glass when you rinse with water.
- If you cannot eliminate the streaking even after following this procedure, replace the wiper blades with new ones. For replacement instructions, refer to "Replacement of wiper blades" ☞11-32.

– CONTINUED –

■ Windshield wiper and washer switches

The wiper operates only when the ignition switch is in the “ON” or “Acc” position.

▼ Windshield wipers

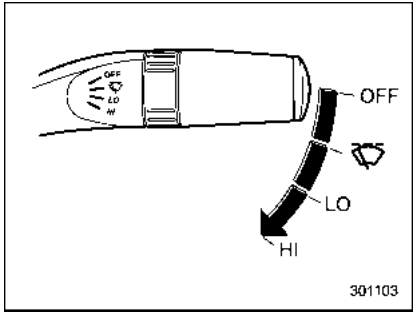

OFF: Off
: Intermittent
LO: Low speed
HI: High speed

To turn the wipers on, push the wiper control lever down.

To turn the wipers off, return the lever to the “OFF” position.

▼ Wiper intermittent time control

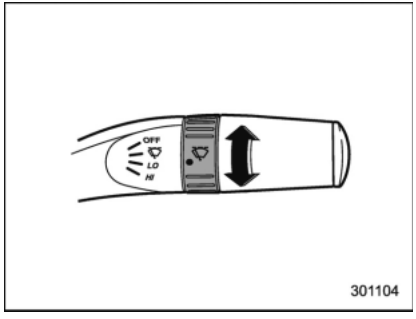

When the wiper switch is in the “” position, turn the dial to adjust the operating interval of the wiper.

The operating interval can be adjusted in nine steps.

▼ Mist (for a single wipe)

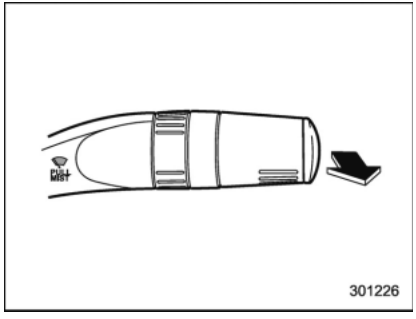

For a single wipe of the wipers, pull the lever toward you. The wipers operate until you release the lever.

▼ **Washer**

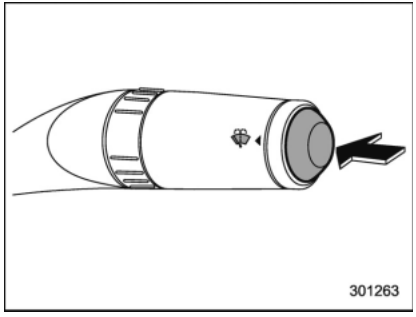

To wash the windshield, push the washer button at the end of the wiper control lever. The washer fluid sprays until you release the washer button. The wipers operate while you push the button.

■ Rear window wiper and washer switch – 5-door

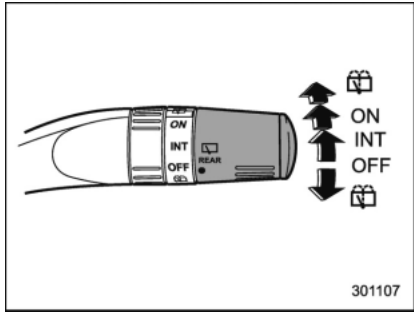

: Washer (accompanied by wiper operation)
ON: Continuous
INT: Intermittent
OFF: Off
: Washer

▼ **Rear wiper**

To turn the rear wiper on, turn the knob on the end of the wiper control lever upward to the “INT” or “ON” position.

To turn the wiper off, return the knob on the end of the lever to the “OFF” position.

With the switch turned to the “INT” position, the rear wiper will operate intermittently at intervals corresponding to the vehicle speed (longer when the vehicle speed is low, shorter when the vehicle speed is high).

When you subsequently move the shift lever to the reverse position, the rear wiper will switch to continuous operation. When you move the shift lever from the reverse position to some other position, the rear wiper will return to intermittent operation.

▼ **Washer**

To wash the rear window while the rear wiper is operating, turn the knob clockwise to the “” position. The washer fluid sprays until you release the knob.

To wash the rear window when the rear wiper is not in use, turn the knob counterclockwise to the “” position. The washer fluid sprays, and 2 seconds later the rear wiper operates. Releasing the knob stops the washer fluid spray, and 3 seconds later the rear wiper stops.

Mirrors

Always check that the inside and outside mirrors are properly adjusted before you start driving.

■ Inside mirror

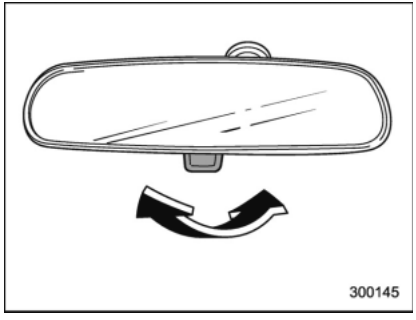

The inside mirror has a day and night position. Pull the tab at the bottom of the mirror toward you for the night position. Push it away for the day position. The night position reduces glare from headlights.

■ Auto-dimming mirror/compass (if equipped)

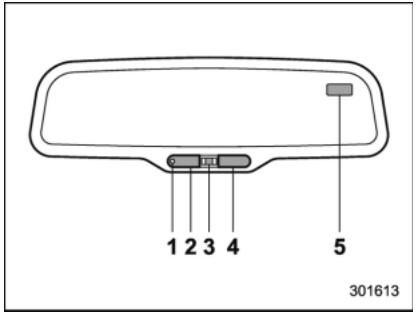

1) Auto dimming indicator
2) Left (mirror) button
3) Photosensor
4) Right (compass) button
5) Compass display

The auto-dimming mirror has an anti-glare feature which automatically reduces glare coming from headlights of vehicles behind you. It also contains a built-in compass.

- By pressing and releasing the left button, the automatic dimming function is toggled on or off. When the automatic dimming function is on, the auto dimming indicator light (green) located on the left button will illuminate.
- By pressing and releasing the right button, the compass display is toggled on or off. When the compass is on, an illuminated compass reading will appear in the upper right corner of the mirror.

Even with the mirror in anti-glare mode, the mirror surface turns bright if the transmission is shifted into reverse. This is to ensure good rearward visibility during reversing.

▼ Photosensors

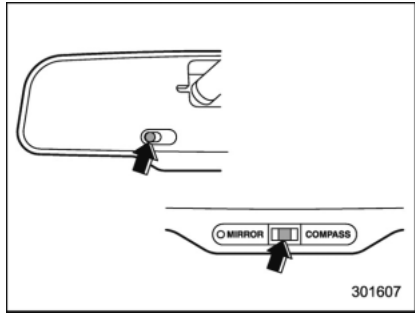

The mirror has a photosensor attached on both the front and back sides. If the glare from the headlights of vehicles behind you strikes the mirror, these sensors detect it and make the reflection surface of the mirror dimmer to help prevent you from being blinded. For this reason, use care not to cover the sensors with stickers, or

other similar items. Periodically wipe the sensors clean using a piece of dry soft cotton cloth or an applicator.

▼ **Compass zone adjustment**

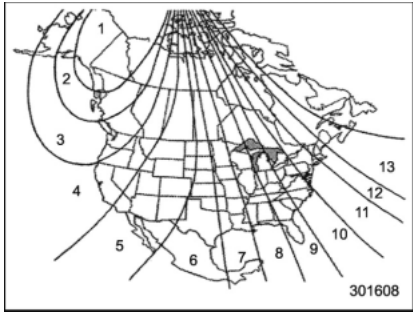

Compass calibration zones

1. The zone setting is factory preset to Zone 8. Refer to the “Compass calibration zones” map shown above to verify that the compass zone setting is correct for your geographical location.
2. Press and hold the right button for 3 seconds then release, and the word “ZONE” will briefly appear and then the zone number will be displayed.
3. Press the right-hand button repeatedly to cycle the display through all possible zone settings. Stop cycling when the correct zone setting for your location is displayed.
4. Releasing the button for 3 seconds will exit the zone setting mode.

▼ **Compass calibration**

1. For optimum calibration, switch off all nonessential electrical accessories (rear window defogger, heater/air conditioning system, spotlight, etc.) and ensure all doors are shut.
2. Drive to an open, level area away from large metallic objects or structures and make certain the ignition switch is in the “ON” position.
3. Press and hold the right button for 6 - 7 seconds then release, and the compass will enter the calibration mode. “CAL” and direction will be displayed.
4. Drive slowly in a circle until “CAL” disappears from the display (approximately two to three circles). The compass is now calibrated.
5. Further calibration may be necessary should outside influences cause the mirror to read inaccurately. You will know that this has occurred if your compass begins to read in only limited directions. Should you encounter this situation, return to step one of the above procedure and recalibrate the mirror.

■ Auto-dimming mirror/compass with HomeLink® (if equipped)

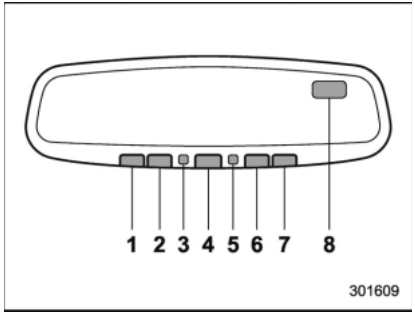

1) HomeLink® button 1
2) HomeLink® button 2
3) LED
4) HomeLink® button 3
5) Sensor
6) Automatic dimming on/off button
7) Compass display button
8) Compass display

The auto-dimming mirror has an anti-glare feature which automatically reduces glare coming from headlights of vehicles behind you. It also contains a built-in compass and HomeLink® wireless control system.

- By pressing the automatic dimming on/off button, the automatic dimming function is toggled on or off. When the automatic

– CONTINUED –

dimming function is on, the LED indicator will illuminate.

Even with the mirror in the automatic dimming mode, the mirror surface turns bright if the transmission is shifted into reverse. This is to ensure good rearward visibility during reversing.

- By pressing the compass display button, the compass display is toggled on or off. When the compass is on, an illuminated compass reading will appear in the upper right corner of the mirror.

When cleaning the mirror, use a paper towel or similar material dampened with glass cleaner. Do not spray glass cleaner directly on the mirror as that may cause the liquid cleaner to enter the mirror housing and damage the mirror.

▼ Photosensors

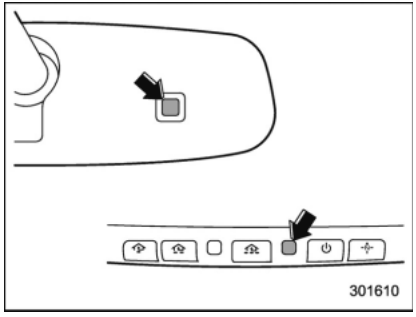

The mirror has a photosensor attached on both the front and back sides. During nighttime driving, these sensors detect distracting glare from vehicle headlights behind you and automatically dim the mirror to eliminate glare and preserve your vision. For this reason, use care not to cover the sensors with stickers, or other similar items. Periodically wipe the sensors clean using a piece of dry soft cotton cloth or an applicator.

▼ Compass zone adjustment

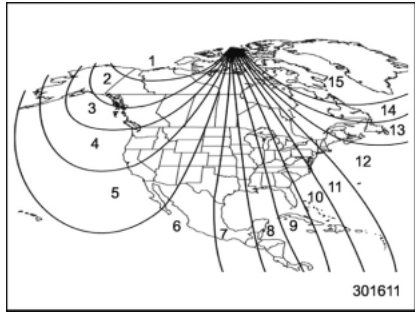

Compass calibration zones

1. Refer to the “Compass calibration zones” map shown above to verify that the compass zone setting is correct for your geographical location.
2. Press and hold the compass display button for 3 seconds until the zone selection comes up (a number will be displayed in the mirror compass window).
3. Press the compass display button repeatedly until the correct zone setting for your location is displayed.
4. Releasing the button for 5 seconds will exit the zone setting mode.

▼ Compass calibration

1. If a “C” is displayed in the compass window, the compass needs to be calibrated.
2. Drive the vehicle in a circle at 5 mph (8 km/h) or less until the display reads a direction.
3. You can also calibrate the compass by driving your vehicle on your everyday routine. The compass will be calibrated once it has tracked a complete circle.
4. To recalibrate your compass, push and hold the compass display button for 9 seconds until a “C” appears in the compass window.
5. Calibrate the compass according to step 2 or step 3.

▼ HomeLink® Wireless Control System

The HomeLink® Wireless Control System can be used to activate remote control devices such as gate operators, garage door openers, door locks, home lighting and security systems.

There are three HomeLink® buttons on the mirror, each of which can be programmed for operation of one desired device. For details on the device types which can be operated by this system, consult the HomeLink® website at: www.homelink.com or call 1-800-355-3515.

Note the following information about this system.

If your vehicle is equipped with the HomeLink® Wireless Control System, it complies with Part 15 of the Federal Communications Commission Rules in the U.S. and the RSS-210 of Industry Canada in Canada. Its operation is subject to the following two conditions:

(1) this device may not cause harmful interference, and (2) this device must accept any interference received, including interference that may cause undesired operation.

Changes and modifications to this system by anyone other than an authorized service facility could void authorization to use this equipment.

HomeLink® and the HomeLink® house are registered trademarks of Johnson Controls, Inc.

⚠ WARNING

- **When programming the HomeLink® Wireless Control System, you may be operating a garage door opener or other device. Make sure that people and objects are out of the way of the garage door or other device to prevent potential harm or damage.**
- **Do not use the HomeLink® Wireless Control System with a garage door opener that lacks the safety stop and reverse feature as required by applicable safety standards. A garage door opener which cannot detect an object, signaling the door to stop and reverse, does not meet these safety standards. Using a garage door opener without these features increases risk of serious injury or death. For more information, consult the HomeLink® website at www.homelink.com or call 1-800-355-3515.**

⚠ CAUTION

When programming the HomeLink® Wireless Control System to operate a garage door opener or an entrance gate, unplug the device’s motor from the outlet during programming to prevent motor burnout.

– CONTINUED –

NOTE

• After programming your HomeLink® Wireless Control System for the desired devices, retain the hand-held transmitters for further programming or device testing in the event of a problem.
• It is recommended that you insert a new battery in the hand-held transmitter of a device to ensure correct programming.

▽ Garage door opener programming in the U.S.A.

NOTE

When programming the HomeLink® Wireless Control System for a garage door opener, it is suggested that you park the vehicle outside the garage.

1. Unplug the motor of the garage door opener from the outlet.

NOTE

If any of the HomeLink® buttons are already programmed for other devices, skip step 2 because it clears the memory of all three buttons.

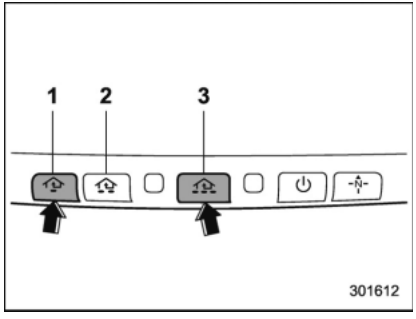

1) HomeLink® button 1
2) HomeLink® button 2
3) HomeLink® button 3

2. Press and hold the two outer HomeLink® buttons (button 1 and button 3) until the indicator light begins to flash (after approximately 20 seconds). Then release both buttons.
3. Hold the end of the garage door opener's hand-held transmitter between 1 and 3 inches (25 and 76 mm) away from the HomeLink® button you wish to program.
4. Simultaneously press and hold both the hand-held transmitter button and the desired HomeLink® button. DO NOT release the buttons until step 5 has been completed.

NOTE

Some gate operators and garage door openers may require you to replace this programming step 4 with procedures in "Programming for entrance gates and garage door openers in Canada" ☞3-43.

5. Hold down both buttons until the HomeLink® indicator light flashes, first slowly then rapidly. When the indicator light flashes rapidly, both buttons may be released. (The rapidly flashing light indicates successful programming of the new frequency signal.)
6. Press and hold the programmed button and check the HomeLink® indicator light. If the indicator light stays on continuously, your garage door should activate and the programming is completed.

If the indicator light flashes rapidly for 2 seconds and then stays on continuously, your garage door opener may be protected by a rolling code feature. In this case you need to perform the additional steps that are described in "Programming rolling-code-protected garage door openers in the U.S.A." ☞3-43.

▽ **Programming rolling-code-protected garage door openers in the U.S.A.**

If your garage door opener has a rolling code feature, program the HomeLink® Wireless Control System for it by following steps 1 through 5 in “Garage door opener programming in the U.S.A.” ☞3-42. Then continue with the following steps.

NOTE

The assistance of a second person may make the programming quicker and easier.

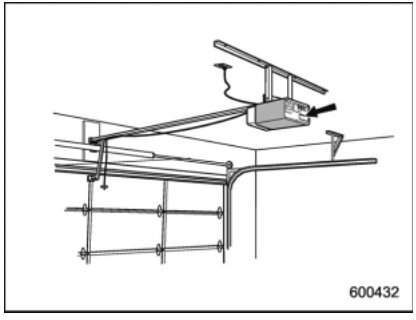

1. Locate the training button on the garage door opener motor head unit. The exact location and color of the button may vary by brand of garage door opener. If it is difficult to locate the training button, refer to your garage door opener’s instruction manual.

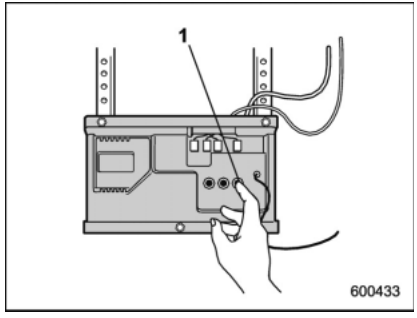

1) Training button

2. Press the training button on the garage door opener motor head unit (which activates the “training light” on the unit). Proceed to step 3 within 30 seconds.

3. Inside the vehicle, firmly press, hold for 2 seconds and release the HomeLink® button that was programmed in the previous section. Press and release the button a second time to complete the programming procedure.

NOTE

Some garage door openers may require you to do the above press-hold-release sequence a third time to complete the programming.

4. The garage door opener should now recognize the HomeLink® Wireless Control System and your garage door opener should activate when the HomeLink® button is pressed.

▽ **Programming for entrance gates and garage door openers in Canada**

1. Unplug the motor of the entrance gate or garage door opener from the outlet.

NOTE

If any of the HomeLink® buttons are already programmed for other devices, skip step 2 because it clears the memory of all three buttons.

– CONTINUED –

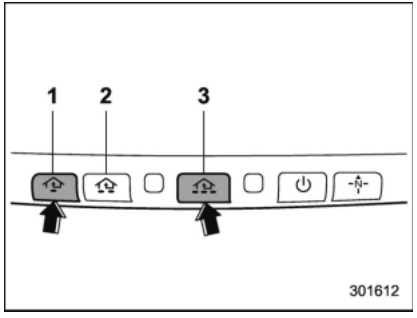

1) HomeLink® button 1
2) HomeLink® button 2
3) HomeLink® button 3

2. Press and hold the two outer HomeLink® buttons (button 1 and button 3) until the HomeLink® indicator light begins to flash (after approximately 20 seconds). Then release both buttons.

3. Hold the end of the entrance gate's/garage door opener's hand-held transmitter between 1 and 3 inches (25 and 76 mm) away from the HomeLink® button you wish to program.

4. Press and hold the desired HomeLink® button.

5. Press and release ("cycle") the hand-held transmitter button every 2 seconds until step 6 is complete.

6. When the indicator light flashes slowly and then rapidly after several seconds, release both buttons.

7. Plug the motor of the entrance gate/garage door opener to the outlet.

8. Test your entrance gate/garage door opener by pressing the programmed HomeLink® button.

▽ Operating the HomeLink® Wireless Control System

Once programmed, the HomeLink® Wireless Control System can be used to remote-control the devices to which its buttons are programmed. To activate a device, simply press the appropriate button. The indicator light illuminates, indicating that the signal is being transmitted.

▽ Programming other devices

To program other devices such as door locks, home lighting and security systems, contact HomeLink® at www.homelink.com or call 1-800-355-3515.

▽ Reprogramming a single HomeLink® button

1. Press and hold the HomeLink® button you wish to reprogram. DO NOT release the button until step 4 has been completed.

2. When the HomeLink® indicator light begins to flash slowly (after approximately 20 seconds), position the hand-held transmitter of the device between 1 to 3 inches (25 to 76 mm) away from the HomeLink® button you wish to program.

3. Press and hold the hand-held transmitter button. The HomeLink® indicator light will flash, first slowly and then rapidly.

4. When the indicator light begins to flash rapidly, release both buttons.

The programming for the previous device is now erased and the new device can be operated by pressing the HomeLink® button.

▽ Erasing HomeLink® button memory

NOTE

• Performing this procedure erases the memory of all the preprogrammed buttons simultaneously. The memory of individual buttons cannot be erased.
• It is recommended that upon the sale of the vehicle, the memory of all programmed HomeLink® buttons be erased for security purposes.

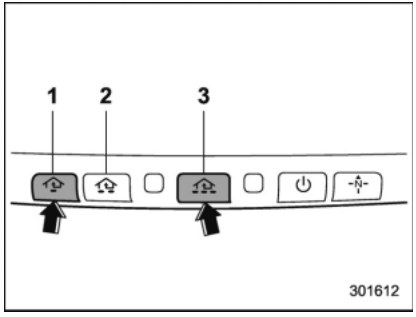

1) HomeLink® button 1
2) HomeLink® button 2
3) HomeLink® button 3

1. Press and hold the two outer buttons (button 1 and button 3) until the indicator light begins to flash (after approximately 20 seconds).
2. Release both buttons.

▽ **In case a problem occurs**

If you cannot activate a device using the corresponding HomeLink® button after programming, contact HomeLink® at www.homelink.com or call 1-800-355-3515 for assistance.

■ Outside mirrors

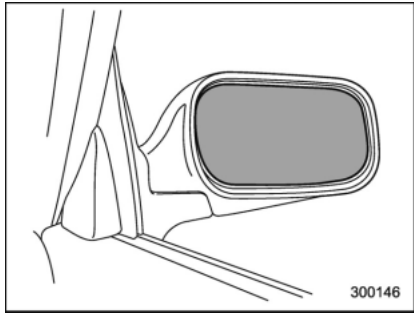

▼ **Convex mirror (passenger side)**

⚠ WARNING

Objects look smaller in a convex mirror and farther away than when viewed in a flat mirror. Do not use the convex mirror to judge the distance of vehicles behind you when changing lanes. Use the inside mirror (or glance backwards) to determine the actual size and distance of objects that you view in convex mirror.

▼ **Remote control mirror switch**

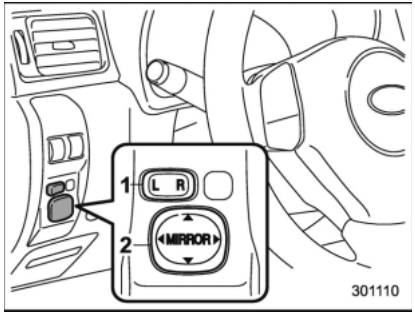

1) Selection switch
2) Direction control switch

The remote control mirrors operate only when the ignition switch is in the “ON” or “Acc” position.

1. Press either end of the selection switch, “L” for the left, “R” for the right.
2. Move the direction control switch in the direction you want to move the mirror.
3. Return the selection switch to the neutral position to prevent unintentional operation.

The mirrors can also be adjusted manually.

– CONTINUED –

▼ **Power folding mirror switch (if equipped)**

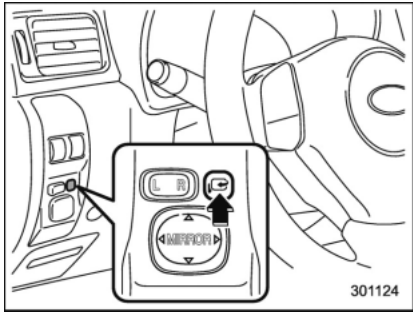

The power folding mirror switch operates only when the ignition switch is in the “ON” or “Acc” position.

To fold the outside mirrors, push the power folding mirror switch. To unfold the mirrors, push the switch again.

NOTE

• If the outside mirrors have been operated (folded or unfolded) manually, when you turn the ignition switch from the “LOCK/OFF” position to the “Acc” or “ON” position, the outside mirrors may be adjusted automatically depending on the status of the power folding mirror switch.

• If the outside mirrors have been manually folded slightly forward of the regularly unfolded position, when you turn the ignition switch from the “LOCK/OFF” position to the “Acc” or “ON” position, the outside mirrors may automatically fold further forward depending on the status of the power folding mirror switch. When this happens, press the power folding mirror switch. By doing so, the outside mirrors which have been folded to the furthest forward position will extend to the regularly unfolded position and then fold rearward in the usual way. In order to unfold the outside mirrors, press the switch again.

• When you unfold the outside mirrors manually, the mirrors may become wobbly. Be sure to unfold the mirrors by switch operation. If the outside mirrors are still wobbly, fold the mirrors again and then unfold them by switch operation.

• When the temperature is low, the outside mirrors may stop during switch operation. If that occurs, push the switch again. When the outside mirrors do not work by switch operation, move them several times manually. This makes it possible to operate them by switch operation.

• When you operate the power folding mirror switch continuously, it may not work. This is not a malfunction. Operate the switch again after waiting for a short period of time.

Defogger and deicer

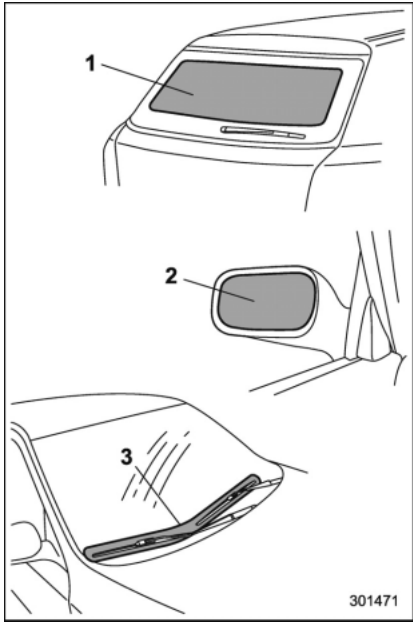

1) Rear window defogger
2) Outside mirror defogger (if equipped)
3) Windshield wiper deicer (if equipped)

The vehicle is equipped with a rear window defogger. Some models are also equipped with an outside mirror defogger and/or windshield wiper deicer. The defogger and deicer system is activated only when the ignition switch is in the “ON” position.

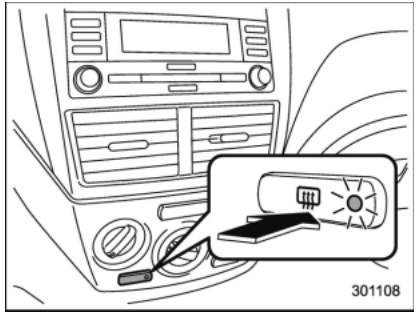

Manual climate control system

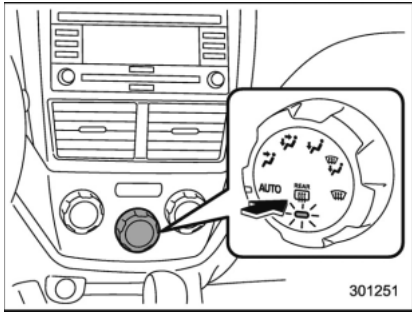

Automatic climate control system

To activate the defogger and deicer system, push the control switch that is located on the climate control panel. The rear window defogger, outside mirror defogger and windshield wiper deicer are activated simultaneously. The indicator light on the control switch illuminates while the defogger and deicer system is activated.

To turn them off, push the control switch again. They also turn off when the ignition switch is turned to the “Acc” or “LOCK” position.

The defogger and deicer system will automatically shut off after approximately 15 minutes. If the rear window and the outside mirrors have been cleared and the

– CONTINUED –

windshield wiper blades have been deiced completely before that time, push the control switch to turn them off. If defrosting, defogging or deicing is not complete, you have to push the control switch to turn them on again.

For models with the automatic climate control system, it is possible to have the defogger and deicer system for the continuous operation mode set by a SUBARU dealer. Consult your SUBARU dealer for details.

If the battery voltage drops below the permissible level, continuous operation of the defogger and deicer system is canceled and the system stops operating.

⚠ CAUTION

- **To prevent the battery from being discharged, do not operate the defogger and deicer system continuously for any longer than necessary.**
- **Do not use sharp instruments or window cleaner containing abrasives to clean the inner surface of the rear window. They may damage the conductors printed on the window.**

NOTE

- **Turn on the defogger and deicer system if the wipers are frozen to the windshield.**
- **If the windshield is covered with snow, remove the snow so that the windshield wiper deicer works effectively.**
- **While the defogger and deicer system is in the continuous operation mode, if the vehicle speed remains at 9 mph (15 km/h) or less for 15 minutes, the windshield wiper deicer automatically stops operating, though the rear window defogger and outside mirror defogger maintain continuous operation in this condition.**

Tilt/telescopic steering wheel

⚠ WARNING

- **Do not adjust the steering wheel tilt/telescopic position while driving. This may cause loss of vehicle control and result in personal injury.**
- **If the lever cannot be raised to the fixed position, adjust the steering wheel again. It is dangerous to drive without locking the steering wheel. This may cause loss of vehicle control and result in personal injury.**

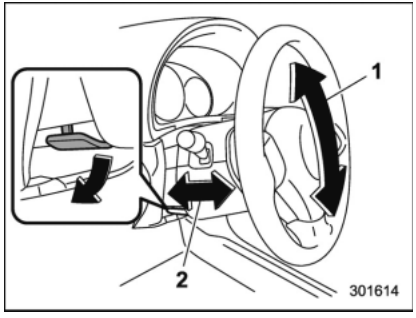

1) Tilt adjustment
2) Telescopic adjustment

1. Adjust the seat position. Refer to “Front seats” ☞1-2.
2. Pull the tilt/telescopic lock lever down.
3. Move the steering wheel to the desired level.
4. Pull the lever up to lock the steering wheel in place.
5. Make sure that the steering wheel is securely locked by moving it up and down, and forward and backward.

Horn

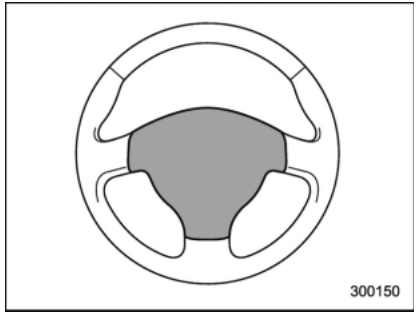

To sound the horn, push the horn pad.

Ventilator 4-2
- Airflow selection 4-2
- Center and side ventilators 4-3

Manual climate control system (if equipped) 4-3
- Control panel 4-3
- Heater operation 4-5
- Air conditioner operation 4-7

Automatic climate control system (if equipped) 4-8
- Control panel 4-8
- To use as full-automatic climate control system 4-8
- To use as semi-automatic climate control system 4-8
- Fan speed control dial 4-9
- Temperature control dial 4-9
- Airflow control dial 4-9
- Air inlet selection button 4-10
- Air conditioner button 4-11
- Temperature sensors 4-11

Operating tips for heater and air conditioner 4-12
- Cleaning ventilation grille 4-12
- Efficient cooling after parking in direct sunlight 4-12
- Lubrication oil circulation in the refrigerant circuit 4-12
- Checking air conditioning system before summer season 4-12
- Cooling and dehumidifying in high humidity and low temperature weather conditions 4-12
- Air conditioner compressor shut-off when engine is heavily loaded 4-13
- Refrigerant for your climate control system 4-13

Air filtration system 4-13
- Replacing an air filter 4-13

Ventilator

■ Airflow selection

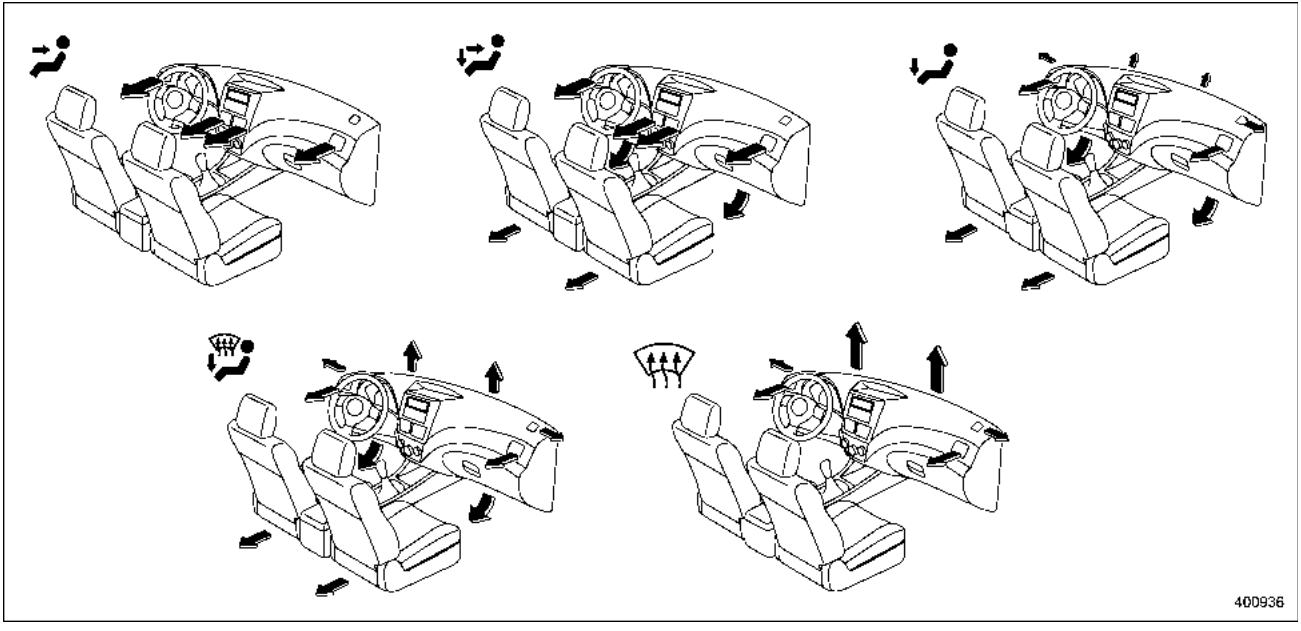

■ Center and side ventilators

▼ Center ventilators

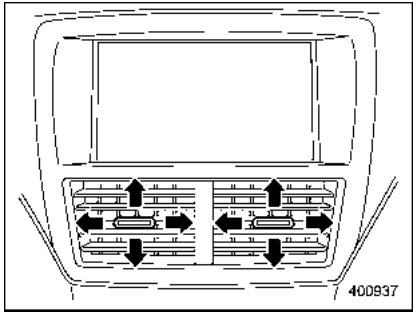

Move the tab to adjust the flow direction.

▼ Side ventilators

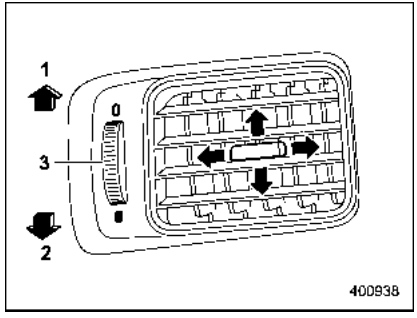

1) Open
2) Close
3) Thumb-wheel

Move the tab to adjust the flow direction. To open or close the ventilator, turn the thumb-wheel up or down.

Manual climate control system (if equipped)

■ Control panel

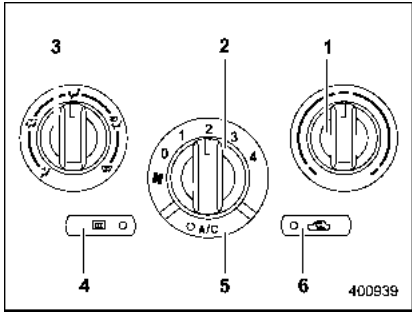

1) Temperature control dial
2) Fan speed control dial
3) Airflow control dial
4) Control switch of the defogger and deicer system (Refer to “Defogger and deicer” ☞3-47.)
5) Air conditioner button
6) Air inlet selection button

▼ Temperature control dial

This dial regulates the temperature of airflow from the air outlets over a range from the blue side (cool) to red side (warm).

– CONTINUED –

▼ **Fan speed control dial**

The fan operates only when the ignition switch is turned to the "ON" position. The fan speed control dial is used to select four fan speeds.

▼ **Airflow control dial**

Each dial position activates the following air outlets.

(Ventilation): Instrument panel outlets

(Bi-level): Instrument panel outlets and foot outlets

(Heat): Foot outlets, both side outlets of the instrument panel and some through windshield defroster outlets (A small amount of air flows to the windshield and both side windows to prevent fogging.)

(Heat-def): Windshield defroster outlets, foot outlets and both side outlets of the instrument panel

: Windshield defroster outlets and both side outlets of the instrument panel

For details, refer to "Airflow selection" ☞4-2.

NOTE

When the dial is placed in the "" or "" position, the air conditioner compressor operates automatically regardless of the position of the air conditioner button to defog the windshield more quickly. However the indicator on the air conditioner button will not illuminate. At the same time, the air inlet selection is automatically set to "outside air" mode.

In this state, you cannot select "recirculation" mode by manually pressing the air inlet selection button.

Also, you cannot stop the air conditioner compressor by pressing the air conditioner button.

▼ **Air conditioner button**

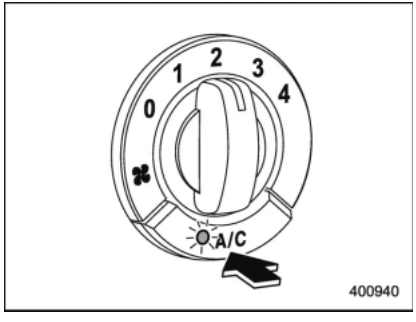

The air conditioner operates only when the engine is running.

Press the air conditioner button while the fan is in operation to turn on the air conditioner. The indicator light will illuminate.

Press it again to turn off the air conditioner.

▼ **Air inlet selection button**

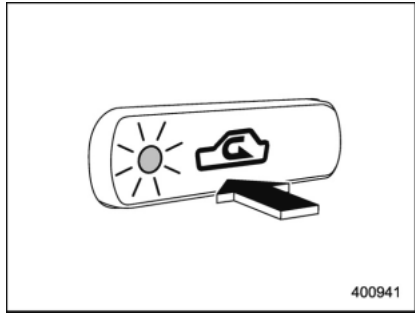

ON position (recirculation): Interior air is recirculated inside the vehicle. Press the air inlet selection button to the ON position. The indicator light will illuminate.

Place the air inlet selection button to the ON position for fast cooling with the air conditioner or when driving on a dusty road.

OFF position (outside air): Outside air is drawn into the passenger compartment. Press the air inlet selection button again to the OFF position. The indicator light will turn off.

Place the air inlet selection button to the OFF position when the interior has cooled to a comfortable temperature and the road is no longer dusty.

⚠ WARNING

Continued operation with the air inlet selection button in the ON position may fog up the windows. Switch to the OFF position as soon as the outside dusty condition clears.

■ Heater operation

NOTE

• When the "" or "" position is selected, the air conditioner compressor automatically operates regardless of the position of the air conditioner button to defog the windshield more quickly. At the same time, the air inlet selection is automatically switched to the OFF position (outside air). However, the air conditioner indicator light does not illuminate at this time.

• When defrosting, defogging or heating, warm air is also emitted from the right and left air outlets. To stop warm airflow from these outlets, turn the corresponding thumb wheel down.

▼ Defrosting or defogging the windshield

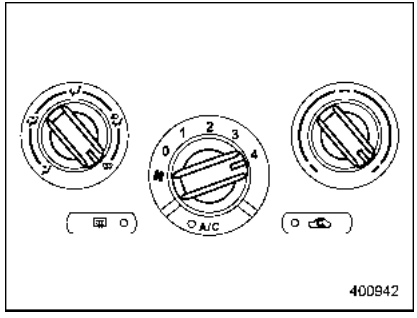

To direct warm air to the windshield and front door windows:

1. Set the airflow control dial to the "" position.
2. Turn the temperature control dial all the way to the right.
3. Set the fan speed control dial to the highest speed.

▼ Heating and defrosting

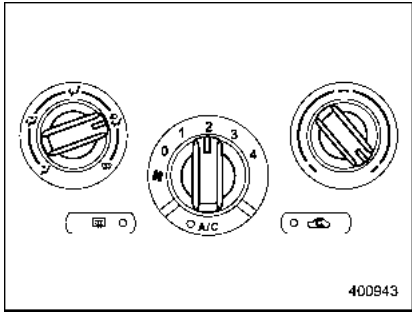

To direct warm air toward the floor and the windshield:

1. Set the airflow control dial to the "" position.
2. Set the temperature control dial to the most comfortable level.
3. Set the fan speed control dial to the desired speed.

– CONTINUED –

▼ **Heating**

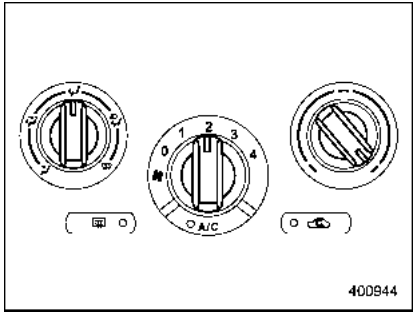

To direct warm air toward the floor:

1. Set the air inlet selection button to the OFF position.
2. Set the airflow control dial to the "" position.
3. Set the temperature control dial to the most comfortable level.
4. Set the fan speed control dial to the desired speed.

▼ **Bi-level heating**

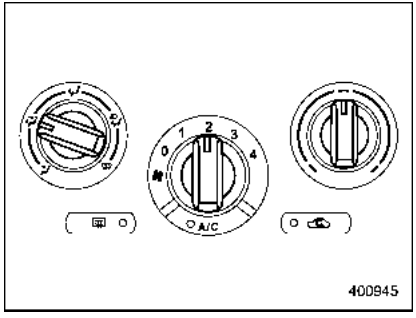

This setting allows you to direct air of different temperatures from the instrument panel and foot outlets. The air from the foot outlets is slightly warmer than from the instrument panel outlets.

1. Set the air inlet selection button to the OFF position.
2. Set the airflow control dial to the "" position.
3. Set the temperature control dial to the desired temperature level.
4. Set the fan speed control dial to the desired speed.

Setting the temperature control dial fully turned to the red area or blue area decreases the temperature difference between the air from the instrument panel outlets and the air from the foot outlets.

▼ **Ventilation**

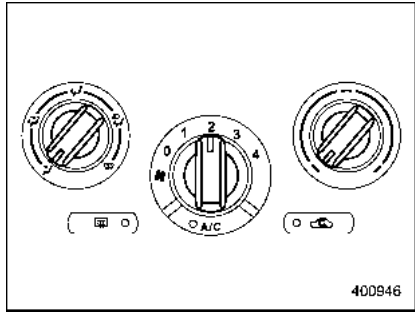

To force outside air through the instrument panel outlets:

1. Set the air inlet selection button to the OFF position.
2. Set the airflow control dial to the "" position.
3. Set the temperature control dial all the way left.
4. Set the fan speed control dial to the desired speed.

When driving on a dusty road, set the air inlet selection button to the "ON" position.

⚠ WARNING

Continued operation with the air

inlet selection button in the ON position may fog up the windows. Switch to the OFF position as soon as the outside dusty condition clears.

■ Air conditioner operation

▼ Cooling or dehumidifying

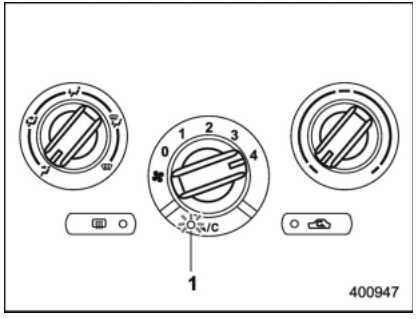

1) ON position

For cooling and dehumidification of the passenger compartment, performing the following steps will allow air to flow through the instrument panel outlets:

1. Set the air inlet selection button to the OFF position.
2. Set the airflow control dial to the "" position.
3. Set the air conditioner button to the "ON" position.
4. Set the temperature control dial to the blue side.
5. Set the fan speed control dial at the highest speed.

▼ Defrosting or defogging

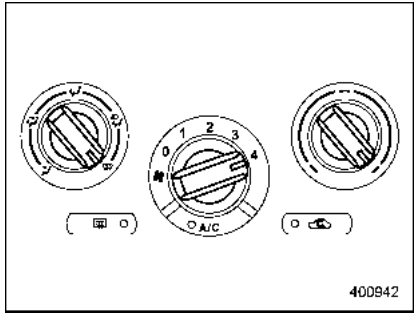

To direct warm air to the windshield and front door windows:

1. Set the airflow control dial to the "" position.
2. Set the temperature control dial to the red side.
3. Set the fan speed control dial at the highest speed.

The air conditioner compressor automatically operates when the airflow control dial set in the "" or "" position to provide better defogging performance.

Automatic climate control system (if equipped)

Although this climate control system can be used as a full-automatic climate control system, it can also, if desired, be used as a semi-automatic climate control system.

When it is used as a full-automatic climate control system, the outlet air temperature, fan speed, airflow distribution, air inlet control, and air conditioner compressor operation are all automatically controlled to maintain a constant, comfortable temperature inside the vehicle.

NOTE

• Operate the automatic climate control system when the engine is running.
• When the engine coolant is cold, the blower does not run.
• In the "AUTO" mode, when the air temperature in the passenger compartment is sufficiently cool, the air conditioner compressor does not operate. For efficient defogging or dehumidifying in cold weather, press the "A/C" button to operate the air conditioner compressor.

■ Control panel

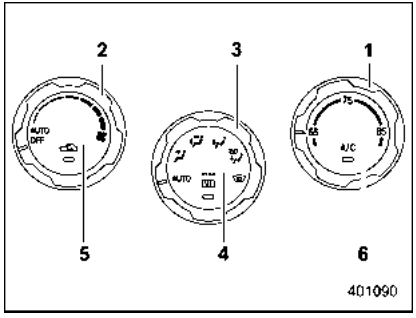

1) Temperature control dial
2) Fan speed control dial
3) Airflow control dial
4) Control switch of the defogger and deicer system (Refer to "Defogger and deicer" ☞3-47.)
5) Air inlet selection button
6) Air conditioner button

■ To use as full-automatic climate control system

Place the temperature control dial in the position for your desired temperature, then set the other dials and buttons as described in the following. The system's functions will then switch to AUTO mode and be controlled automatically.

- Airflow control dial: AUTO position
- Fan speed control dial: AUTO position

■ To use as semi-automatic climate control system

Each function can be individually set to AUTO mode independently of the others. Any function set to AUTO mode is controlled automatically. Any function not set to AUTO mode can be manually adjusted as desired.

The temperature can be set within a range of 65 to 85°F (20 to 30°C).

■ Fan speed control dial

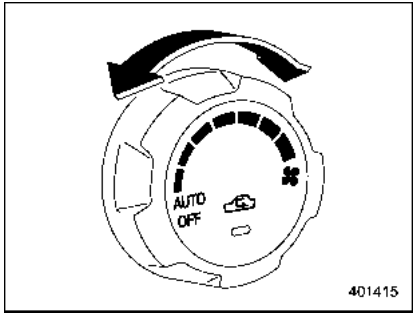

The fan operates only with the ignition switch in the ON position. The fan speed control dial is used to select the AUTO (automatic control) mode or to select the desired fan speed. The dial's positions and their functions are as follows.

OFF: The fan does not operate. When the AUTO mode is operating, the setting of air inlet is fixed in the "OFF" position (outside air). When the AUTO mode is not operating, the setting will remain in the condition set just before the air conditioner turned off.

AUTO: The fan speed is adjusted automatically in accordance with the air temperature inside and outside the passenger compartment, the intensity of sunlight, and other factors. SUBARU recommends using the AUTO position.

Other positions: The fan speed can be adjusted in 7 steps.

NOTE

With the fan speed control dial in the AUTO position and the airflow control dial in the "", "", or "" position, the fan does not operate during engine warm-up until the engine coolant temperature exceeds approximately 122°F (50°C).

■ Temperature control dial

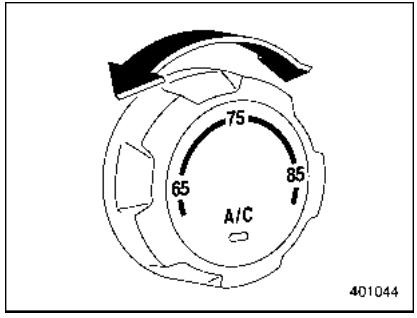

This dial is used to set the desired interior temperature. With the dial set to your desired temperature, the system automatically adjusts the temperature of air supplied from the outlets such that the desired temperature is achieved and maintained.

If the dial is turned fully counterclockwise, the system gives maximum cooling performance. If the dial is turned fully clockwise, the system gives maximum heating performance.

■ Airflow control dial

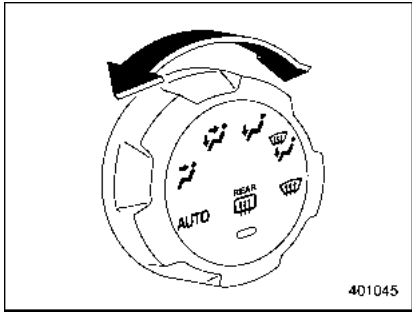

Each dial position activates the following air outlets.

AUTO: The airflow control is adjusted automatically in accordance with the air temperature inside and outside the passenger compartment, the intensity of sunlight, and other factors. SUBARU recommends using the AUTO position.

(Ventilation): Instrument panel outlets

– CONTINUED –

(Bi-level): Instrument panel outlets and foot outlets

(Heat): Foot outlets, both side outlets of the instrument panel and some through windshield defroster outlets (A small amount of air flows to the windshield and both side windows to prevent fogging.)

(Heat-def): Windshield defroster outlets, foot outlets and both side outlets of the instrument panel

: Windshield defroster outlets and both side outlets of the instrument panel

For details, refer to “Airflow selection” ☞4-2.

NOTE

When the dial is placed in the “” or “” position, the air inlet selection is automatically set to “outside air” mode.

■ Air inlet selection button

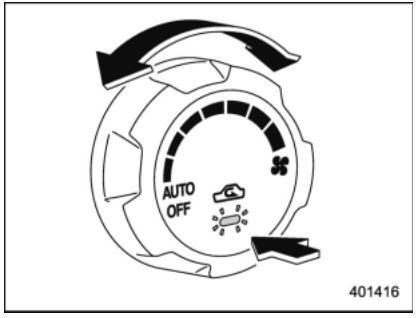

ON position (recirculation): Interior air is recirculated inside the vehicle. Press the air inlet selection button to the ON position for fast cooling with the air conditioner or when driving on a dusty road. The indicator light will illuminate.

OFF position (outside air): Outside air is drawn into the passenger compartment. Press the air inlet selection button to the OFF position when the interior has cooled to a comfortable temperature and the road is no longer dusty. The indicator light will turn off.

AUTO: Turn the fan speed control dial and airflow control dial to the AUTO position. The air inlet control is then adjusted automatically in accordance with the air temperature inside and outside the passenger compartment, the intensity of sunlight, and other factors. Pressing the air inlet selection button cancels the “AUTO” mode. To return to “AUTO” mode, turn the fan speed control dial or airflow control dial to a position other than the AUTO position. Then turn to “AUTO” mode. SUBARU recommends using the AUTO position.

⚠ WARNING

Continued operation in the ON position may fog up the windows. Switch to the OFF position as soon as the outside dusty condition clears.

NOTE

When the battery is disconnected or when the battery voltage is low, the indicator light will blink but this is not a malfunction. However, an electrical system malfunction may occur if the indicator light is blinking when the engine is started. Have your vehicle inspected by a SUBARU dealer.

■ Air conditioner button

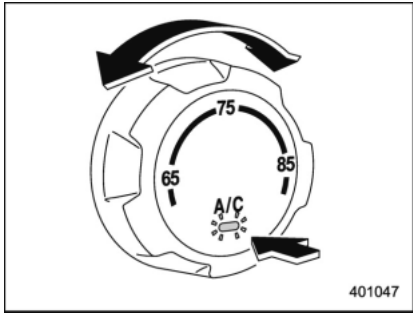

The button positions and their functions are as follows.

ON: The air conditioner operates while the fan is running.

Press the button to select this position. The indicator light will illuminate.

OFF: The air conditioner does not operate.

Press the button again to select this position. The indicator light will turn off.

AUTO: Turn the fan speed control dial and airflow control dial to the AUTO position. The air conditioner compressor operation is then adjusted automatically in accordance with the air temperature inside and outside the passenger compartment, the intensity of sunlight, and other factors. Pressing the button cancels the "AUTO" mode. To return to "AUTO" mode, turn the fan speed control dial or airflow control dial to a position other than the AUTO position. Then turn to "AUTO" mode. SUBARU recommends using the AUTO position.

NOTE

For efficient defogging or dehumidifying in cold weather, turn on the air conditioner. However, if the ambient temperature decreases to approximately 32°F (0°C), the air conditioner and dehumidification system may not work properly.

■ Temperature sensors

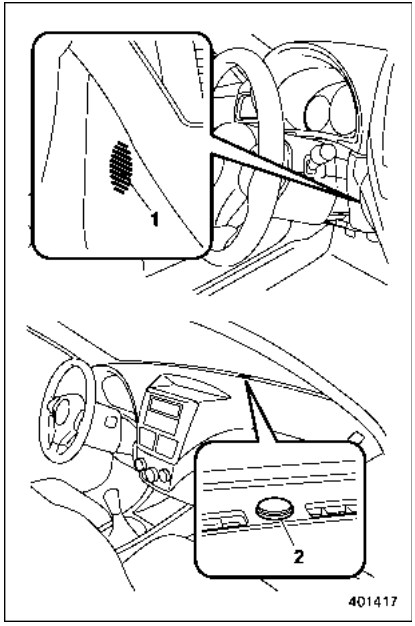

1) Interior air temperature sensor
2) Solar sensor

The automatic climate control system employs several sensors. These sensors are delicate. If they are not treated

– CONTINUED –

properly and become damaged, the system may not be able to control the interior temperature correctly. To avoid damaging the sensors, observe the following precautions.

– Do not subject the sensors to impact.
– Keep water away from the sensors.
– Do not cover the sensors.

The sensors are located as follows.

– Solar sensor: beside the windshield defroster grille.
– Interior air temperature sensor: near the ignition switch.
– Outside temperature sensor: behind the front grille.

Operating tips for heater and air conditioner

■ Cleaning ventilation grille

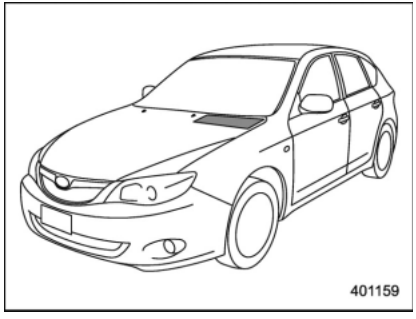

Always keep the front ventilation inlet grille free of snow, leaves, or other obstructions to ensure efficient heating and defrosting. Since the condenser is located in front of the radiator, this area should be kept clean because cooling performance is impaired by any accumulation of insects and leaves on the condenser.

■ Efficient cooling after parking in direct sunlight

After parking in direct sunlight, drive with the windows open for a few minutes to allow outside air to circulate into the heated interior. This results in quicker cooling by the air conditioner. Keep the windows closed during the operation of the air conditioner for maximum cooling efficiency.

■ Lubrication oil circulation in the refrigerant circuit

Operate the air conditioner compressor at a low engine speed (at idle or low driving speeds) a few minutes each month during the off-season to circulate its oil.

■ Checking air conditioning system before summer season

Check the air conditioner unit for refrigerant leaks, hose conditions, and proper operation each spring. Have the air conditioning system checked by your SUBARU dealer.

■ Cooling and dehumidifying in high humidity and low temperature weather conditions

Under certain weather conditions (high relative humidity, low temperatures, etc.) a small amount of water vapor emission from the air outlets may be noticed. This condition is normal and does not indicate any problem with the air conditioning

system.

■ Air conditioner compressor shut-off when engine is heavily loaded

To improve acceleration and gas mileage, the air conditioner compressor is designed to temporarily shut off during air conditioner operation whenever the accelerator is fully depressed such as during rapid acceleration or when driving on a steep upgrade.

■ Refrigerant for your climate control system

Your air conditioner uses ozone friendly refrigerant HFC134a. Therefore, the method of adding, changing or checking the refrigerant is different from the method for CFC12 (freon). Consult your SUBARU dealer for service. Repairs needed as a result of using the wrong refrigerant are not covered under warranty.

Air filtration system

Replace the filter element according to the replacement schedule as follows. This schedule should be followed to maintain the filter's dust collection ability. Under extremely dusty conditions, the filter should be replaced more frequently. It is recommended that you have your filter checked or replaced by your SUBARU dealer. For replacement, use only a genuine SUBARU air filter kit.

Replacement schedule:

Every 12 months or 7,500 miles (12,000 km) whichever comes first

⚠ CAUTION

Contact your SUBARU dealer if the following occurs, even if it is not yet time to change the filter:

- **Reduction of the airflow through the vents.**
- **Windshield gets easily fogged or misted.**

NOTE

The filter can influence the air conditioning, heating and defroster performance if not properly maintained.

■ Replacing an air filter

1. Remove the glove box.
   (1) Open the glove box.

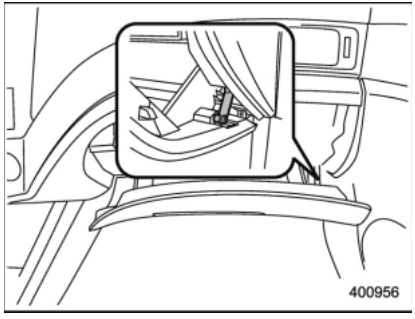

   (2) Remove the damper shaft from the glove box.

– CONTINUED –

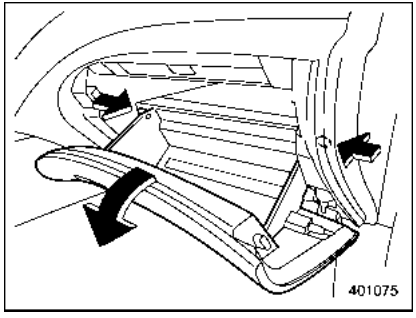

(3) Pull out the glove box.

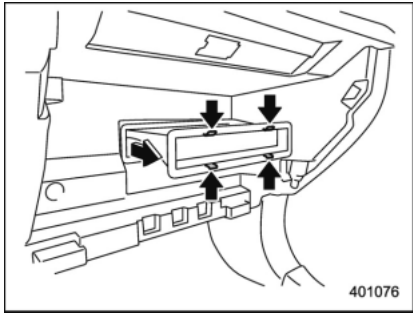

2. Remove the air filter.

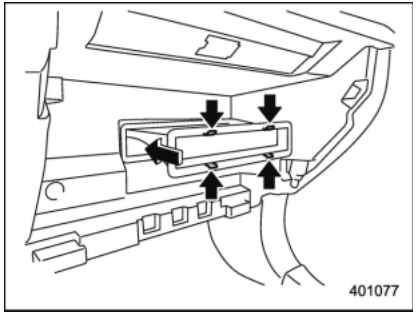

3. Replace the air filter element with a new one.

⚠ CAUTION

The arrow mark on the filter must point UP.

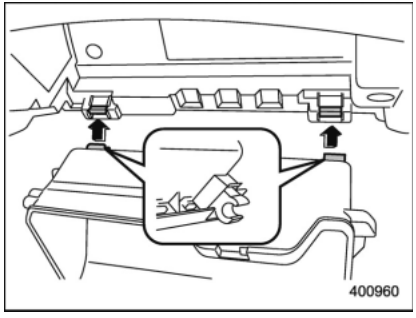

4. Reinstall the glove box, and connect the damper shaft.
5. Close the glove box.

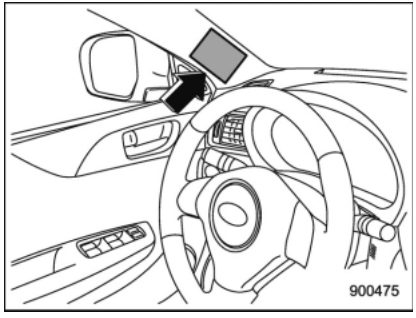

6. Attach the service label to the driver's side door pillar.

Antenna system 5-3
- Roof antenna 5-3
- FM reception 5-3

Installation of accessories 5-4

Audio set 5-4
- Type A audio set (if equipped) 5-5
- Type B audio set (if equipped) 5-6

Power and sound controls 5-7
- Power switch and volume control 5-7
- Sound control 5-7
- Adjustable level of each mode 5-9

FM/AM radio operation 5-10
- FM/AM selection 5-10
- Tuning 5-10
- Displaying radio PS (Program Service Name) and RT (Radio Text) 5-12
- Station preset 5-12

Satellite radio operation (if equipped) 5-13
- Sirius XM™ Satellite Radio Activation (for U.S.A. only) 5-13
- Sirius satellite radio (for Canada only) 5-13
- Satellite radio reception 5-13
- Displaying satellite radio ID of tuner 5-14
- Band selection 5-15
- Channel and category selection 5-15
- Channel preset 5-16
- Display selection 5-16

CD player operation 5-16
- Play file 5-17
- How to insert a CD(s) (type A) 5-17
- How to insert a CD (type B) 5-18
- How to play back a CD 5-18
- To select a track from the beginning 5-18
- Fast-forwarding and rewinding 5-19
- Repeating 5-19
- Random playback 5-20
- Scan 5-20
- Display selection 5-21
- Folder selection 5-21
- How to eject CDs from the player (type A) 5-22
- How to eject a CD from the player (type B) 5-22
- When the following messages are displayed 5-22

Auxiliary input jack (if equipped) 5-23

Precautions to observe when handling a compact disc 5-24

USB storage device / iPod® operations (type B audio) 5-26
- Play file 5-26
- Connectable USB storage device 5-26
- Connectable iPod® models 5-27
- Connecting USB storage device / iPod® 5-27
- How to play back 5-28
- To select a track from the beginning 5-29
- To select a chapter from the beginning when connecting iPod® 5-29
- Fast-forwarding and rewinding 5-29
- Repeating 5-29
- Random playback 5-29
- SCAN (only when connecting USB storage device) 5-30
- Selecting category (only when connecting iPod®) 5-30

Display selection 5-30
Folder selection (only when connecting USB storage device) 5-30
When "CHECK DEVICE" is displayed 5-30
Audio control buttons 5-31
MODE button 5-31
"∧" and "∨" buttons 5-31
Volume control buttons 5-32
MUTE button (models without Hands-free system) 5-33
Bluetooth® audio (type B audio) 5-33
Media format 5-33
Setting Bluetooth® audio 5-33
Bluetooth® audio operation 5-34
Hands-free system (if equipped) 5-35
Tips for the Hands-free system 5-35
Certification for the Hands-free system 5-36
Safety precautions 5-37
Using the Hands-free system 5-38
Bluetooth® setting 5-46

Antenna system

■ Roof antenna

⚠ CAUTION

- **Be sure to lower the antenna rod before entering garages, parking towers and other locations with low ceilings.**
- **Remove the antenna rod before washing your car at a car wash. If the antenna rod is left attached, it may scratch the roof.**
- **When reinstalling the removed antenna rod, be sure to fully tighten it.**

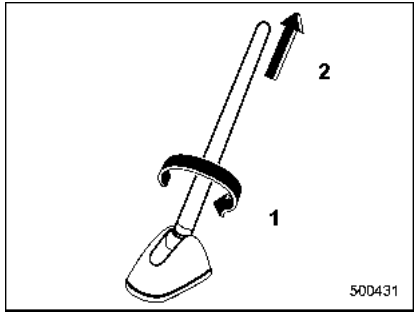

1) Unscrew
2) Remove

The roof antenna is installed in the center at the rear part of the roof.

It is possible to remove the antenna rod by unscrewing it from its base.

■ FM reception

Although FM is normally static free, reception can be affected by the surrounding area, atmospheric conditions, station strength and transmitter distance. Buildings or other obstructions may cause momentary static, flutter or station interference. If reception continues to be unsatisfactory, switch to a stronger station.

Installation of accessories

Always consult your SUBARU dealer before installing a citizen band radio or other transmitting device in your vehicle. Such devices may cause the electronic control system to malfunction if they are incorrectly installed or if they are not suited for the vehicle.

Audio set

Your SUBARU may be equipped with one of the following audio sets. Refer to the pages indicated in this section for operating details.

NOTE

If a cell phone is placed near the audio set, it may cause the audio set to emit noise when the phone receives calls. This noise does not indicate an audio set malfunction. Note that a cell phone should be placed as far as possible from the audio set.

■ Type A audio set (if equipped)

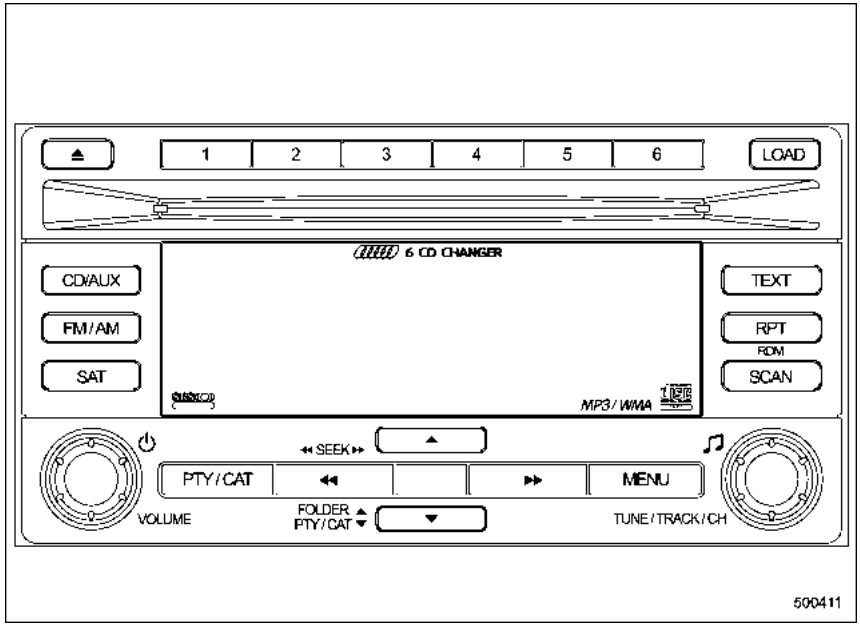

The audio set will operate only when the ignition switch is in the “Acc” or “ON” position.

- Power and sound controls: refer to page 5-7
- Radio operation: refer to page 5-10
- Satellite radio operation (if equipped): refer to page 5-13
- CD (compact disc) player operation: refer to page 5-16
- Auxiliary input jack: refer to page 5-23

– CONTINUED –

■ Type B audio set (if equipped)

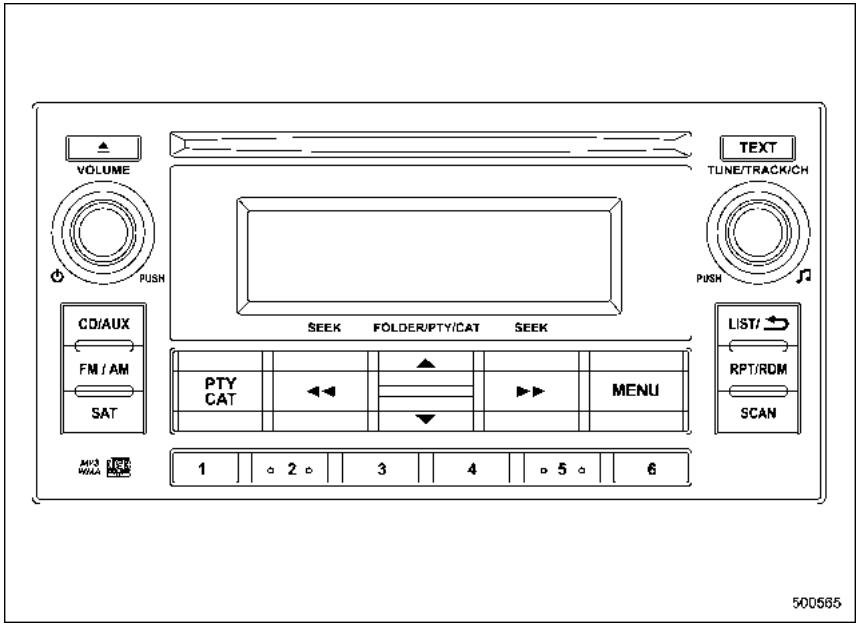

The audio set will operate only when the ignition switch is in the “Acc” or “ON” position.

- Power and sound controls: refer to page 5-7
- Radio operation: refer to page 5-10
- Satellite radio operation (if equipped): refer to page 5-13
- CD (compact disc) player operation: refer to page 5-16
- Auxiliary input jack: refer to page 5-23
- USB storage device/iPod® operation: refer to page 5-26
- Hands-free system: refer to page 5-35

Power and sound controls

■ Power switch and volume control

Type A audio	
Type B audio	

The dial is used for both power (ON/OFF) and volume control. The radio is turned ON and OFF by pushing the dial, and the volume is controlled by turning the dial.

■ Sound control

▼ Tone and balance control

Type A audio	
Type B audio	

Each brief press of the “TUNE/TRACK/CH” dial changes the control modes in the following sequence.

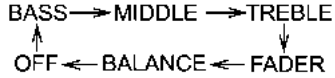

Choose the desired level for each mode by turning the “TUNE/TRACK/CH” dial.

The control function returns to the tune/track/channel control mode after approximately 5 seconds.

▼ Other sound setting controls

Type A audio	MENU
Type B audio	MENU

Each brief press of the “MENU” button changes the control modes in the following sequence.

Type A audio:

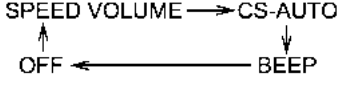

Type B audio:

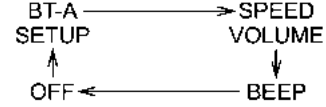

Choose the desired settings for each mode by turning the “TUNE/TRACK/CH” dial.

The control function returns to the tune/track/channel control mode after approximately 5 seconds.

▽ SPEED VOLUME setting

SPEED VOLUME CONTROL is a function that automatically adjusts the volume according to the vehicle speed. As the vehicle speed increases, the audio volume automatically increases to match the vehicle speed, in order to create a pleasant listening environment even as the driving noise increases. The amount of this automatic volume change can be set in the range from OFF to 2. The initial setting is OFF.

▽ BEEP setting

A beep sound (operation sound) that occurs when the audio system is operated can be set ON/OFF. The initial setting is ON.

– CONTINUED –

▽ **SRS CS Auto setting (type A audio)**

SRS CS Auto can be set ON/OFF. When this setting is ON, "(●)" is displayed on the screen.

NOTE

SRS CS Auto creates a 5.1ch equivalent surround field using 10 speakers that are installed in the vehicle.

SRS CS Auto features:

1) Sound originating from door mount speakers can be heard at ear level (built in SRS FOCUS effect).
2) Ultra rich bass sound can be obtained from standard door mount speakers (built in SRS TruBass effect).
3) Surround sound can be obtained from 2-channel stereo sources such as CD, MP3 and FM (built in SRS Circle Surround II effect).
4) SRS CS Auto can position the center channel image in the center of the vehicle's windshield. This eliminates the need for a center speaker (built in SRS Circle Surround II phantom center and SRS FOCUS effects).

CS Auto, TruBass, FOCUS, Circle Surround-II, SRS and "(●)" symbol are trademarks of SRS Labs, Inc.

CS Auto technology is incorporated under license from SRS Labs, inc.

■ Adjustable level of each mode

Mode		Range of levels (displayed)	Initial setting	Turn counterclockwise	Turn clockwise
Volume	Volume control	0 to 40	15	For less volume	For more volume
	AUX volume control*	0 to 40	15	For less volume	For more volume
Tone and balance	Bass control	−8 to +8	0	For less bass sound	For more bass sound
	Midrange control	−8 to +8	0	For less midrange sound	For more midrange sound
	Treble control	−8 to +8	0	For less treble sound	For more treble sound
	Balance	L9 to R9	0	Right channel attenuated	Left channel attenuated
	Fader	R9 to F9	0	Front attenuated	Rear attenuated
Other settings	SPEED VOLUME	OFF to 2	OFF	For less auto volume change	For more auto volume change
	BEEP	OFF to ON	ON	OFF	ON
	CS Auto (Type A audio)	OFF to ON	OFF	OFF	ON

*: For type A audio, AUX volume can be adjusted only when an AUX audio product is connected.

FM/AM radio operation

■ FM/AM selection

Type A audio	FM/AM
Type B audio	FM / AM

Press the “FM/AM” button when the radio is off to turn on the radio.

Press the “FM/AM” button when the radio is on to select the preferred reception mode.

Each brief press of the “FM/AM” button changes the radio in the following sequence starting from the last radio band with you selected.

FM1 → FM2 → FM3 → AM

■ Tuning

▼ Manual tuning

Type A audio	
Type B audio	

Turn the “TUNE/TRACK/CH” dial clockwise to increase the tuning frequency and turn the “TUNE/TRACK/CH” dial counterclockwise to decrease it.

Each time the dial is turned, the frequency interval can be changed between 10 kHz in the AM mode and 0.2 MHz in the FM mode.

▼ Stereo indicator

The stereo indicator “ST” will illuminate when an FM stereo broadcast is received.

▼ Seek tuning (SEEK)

Type A audio:

Seek up	▶▶
Seek down	◀◀

Type B audio:

Seek up	▶▶
Seek down	◀◀

If you press the “◀◀” or “▶▶” side of the “SEEK” button briefly, the radio will automatically search for a receivable station and stop at the first one it finds.

This function may not be available when radio signals are weak. When this happens, perform manual tuning to select the desired station.

▼ Scan tuning (SCAN)

Type A audio	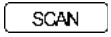
Type B audio	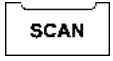

If you press the “SCAN” button briefly, the radio will switch to the scan mode. In this mode, the radio scans through the radio band until a station is found. The radio will stop at the station for 5 seconds while displaying the frequency, after which scanning will continue until the entire band has been scanned.

Press the “SCAN” button again to cancel the SCAN mode and to stop at any displayed channel.

Automatic tuning may not function properly if the station reception is weakened by distance from the station or proximity to tall buildings and hills.

▼ PTY (Program type) group tuning (only FM reception)

Type A audio	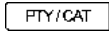
Type B audio	

Press the “PTY/CAT” button to change to the PTY selection mode. At this time, the PTY group that you are currently listening to will be displayed for 10 seconds. In the PTY selection mode, “PTY” is displayed on the screen.

▽ PTY (Program type) group selection

Type A audio:

PTY group up by one step	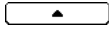
PTY group down by one step	

Type B audio:

PTY group up by one step	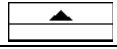
PTY group down by one step	

In the PTY selection mode, press the “FOLDER/PTY/CAT” button “▲” or “▼” to change the PTY group by one step at a time.

This operation only changes the display. It does not change the station that is currently being received.

▽ Seek in PTY (Program type) group

Type A audio:

Seek up	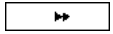
Seek down	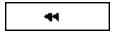

– CONTINUED –

Type B audio:

Seek up	
Seek down	

In the PTY selection mode, when the desired PTY group has been selected, pressing the "SEEK" button "▶▶" or "◀◀" seeks within that PTY group.
The control function returns to the normal mode after approximately 10 seconds.

■ Displaying radio PS (Program Service Name) and RT (Radio Text)

Type A audio	
Type B audio	

If the PS (Program Service Name) and/or RT (Radio Text) are available, pressing the "TEXT" button changes the display among PS, RT and frequency. The initial setting is "PS".

NOTE

• The maximum number of characters that can be displayed for PS is 8.
• The maximum number of characters that can be displayed for RT is 64.
• If RT is 13 characters or longer, press and hold the "TEXT" button in order to change the page.

■ Station preset

▼ How to preset stations

1. Select the preferred reception mode.
2. Select the preferred station.
3. Press and hold one of the preset buttons (from "1" to "6") to store the frequency. If the button is pressed briefly, the preceding selection will remain in the memory.

NOTE

• Up to six stations for each reception mode may be preset.
• If the connection between the radio and battery is broken for any reason such as vehicle maintenance or radio removal, all stations stored in the preset buttons are cleared. If this occurs, it is necessary to reset the preset buttons.
• If a cell phone is placed near the radio, it may cause the radio to emit noise when a phone call is received. This noise does not indicate a radio malfunction.

▼ Selecting preset stations

1. Select the preferred reception mode.
2. Press the preferred preset button (from "1" to "6") briefly.

Satellite radio operation (if equipped)

To receive satellite radio, it is necessary to install the SUBARU genuine satellite receiver (optional equipment) and to enter into a contract. For details, please contact your SUBARU dealer.

■ Sirius XM™ Satellite Radio Activation (for U.S.A. only)

Models with Sirius XM™ are eligible for a 3-month complimentary subscription to the Sirius XM™ Satellite Radio service.

▼ Activation process

If you would like to activate your Satellite Radio online, please visit http://www.siriusxm.com/activationhelp and follow the step-by-step instructions for easy activation.

■ Sirius satellite radio (for Canada only)

Sirius satellite radio is a recent innovation that allows the listener to experience digital sound quality and to have a greater variety of channels.

Use of satellite radio (Sirius) requires a tuner, antenna and a service contract. For details, please contact your SUBARU dealer or visit Sirius Satellite Radio at www.sirius.ca or call 1-888-539-7474 for more information. Sirius, the Sirius dog logo, channel names and logos are trademarks of SIRIUS Satellite Radio Inc.

■ Satellite radio reception

Satellite radio signals are best received in areas with a clear view of the open sky. In areas where there are tall buildings, trees, tunnels or other structures that may obstruct the signal of the satellites, there may be signal interruptions. Other circumstances that may result in signal loss include driving near a wall, steep cliff, hill or driving on the lower level of a multi-tiered road or inside of a parking garage.

To help reduce this condition, satellite radio providers have installed ground-based repeaters in heavily populated areas. However, you may still experience reception problems in some areas.

▼ Sirius XM™ satellite radio reception tips for antenna on the windshield (for U.S.A. only — if equipped)

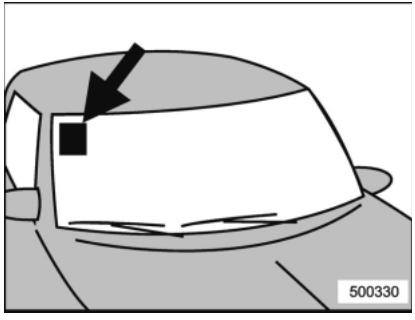

For some models, the satellite radio antenna is fixed to the upper right hand corner of the windshield.

The Sirius XM™ satellite radio receiver that is fitted to your vehicle receives the necessary signals from two specially designated satellites that are in a geostationary orbit over the equator. One satellite covers the east coast and the other covers the west coast. Both of them direct their signals north. These signals are then relayed throughout the radio reception area by a network of ground repeater stations. The satellite radio signals are transmitted as “line of sight” signals. The

– CONTINUED –

line of sight signals can be blocked by objects such as buildings, but the network of repeater stations allows signal coverage within urban areas such as cities.

You may experience problems in receiving Sirius XM^{TM} satellite radio signals in the following situations.

- If you are driving northward in a coastal area

Because the satellite radio antenna is located on the windshield, the signal comes from the south and may not be able to reach the antenna in some circumstances when you are driving north.

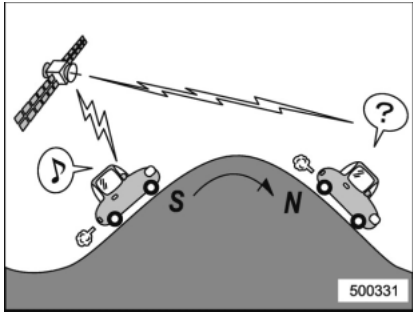

- If you are driving in a tunnel or a covered parking area
- If you are driving beneath the top level of a multi-level freeway
- If you drive under a bridge
- If you are driving next to a tall vehicle (such as a truck or a bus) that blocks the signal
- If you are driving in a valley where the surrounding hills or peaks block the signal from the south
- If you are driving on a mountain road where the southern direction is blocked by mountains

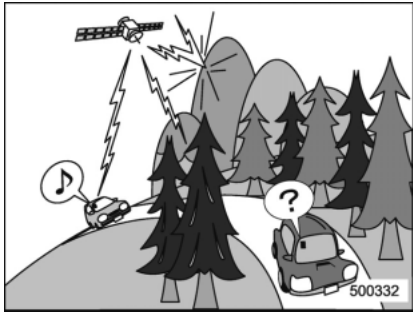

- If you are driving in an area with tall trees that block the signal (10 m or more), for example on a road that goes through a dense forest
- The signal can become weak in some areas that are not covered by the repeater station network.

Please note that these may be other unforeseen circumstances when there are problems with the reception of XM^{TM} satellite radio signals.

■ Displaying satellite radio ID of tuner

When you activate satellite radio, you should have your satellite radio tuner ID ready because each tuner is identified by its unique satellite radio tuner ID.

The satellite radio ID will be needed when you activate satellite radio and receive satellite radio customer support.

The satellite radio ID can be found on the audio display by tuning the channel to “0”.

Turn the “TUNE/TRACK/CH” dial to select the satellite radio channel.

NOTE

For Sirius, change the display to an indication mode other than the channel number after performing the above operation.

■ Band selection

Type A audio	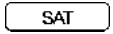
Type B audio	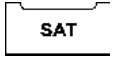

Push the “SAT” button when the radio is off to turn on the radio.

Push the “SAT” button when the radio is on to select SAT1, SAT2 or SAT3 reception.

■ Channel and category selection

▼ Channel selection

Type A audio	
Type B audio	

Turn the “TUNE/TRACK/CH” dial clockwise to select the next channel and turn the “TUNE/TRACK/CH” dial counterclockwise to select the previous channel.

▼ Skip channel selection

When in the SAT mode, press and hold the following buttons to change to the channel selection mode.

Type A audio:

Channel up by 10 steps	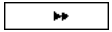
Channel down by 10 steps	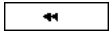

Type B audio:

Channel up by 10 steps	
Channel down by 10 steps	

▼ Category selection

Type A audio	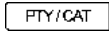
Type B audio	

To activate the category search mode, press the “PTY/CAT” button. To deactivate the category search mode, press the “PTY/CAT” button again.

When in the category search mode, press the following buttons to change the category up or down.

Type A audio:

Category up by one step	
Category down by one step	

Type B audio:

Category up by one step	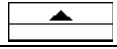
Category down by one step	

When a category is selected, turning the “TUNE/TRACK/CH” dial selects channels only within the selected category.

The control function returns to the normal mode after approximately 10 seconds.

– CONTINUED –

▼ **Channel scan**

Type A audio	SCAN
Type B audio	SCAN

Press the “SCAN” button briefly to change the radio to the SCAN mode. In this mode, under the selected category, the radio scans through the channel until a station is found. The radio will stop at the station for 5 seconds while displaying the channel number, after which scanning will continue until the entire channel has been scanned from the low end to the high end.

Press the “SCAN” button again to cancel the SCAN mode and to stop on any displayed channel.

■ Channel preset

▼ **How to preset channels**

1. Press the “SAT” button to select SAT1, SAT2 and SAT3 reception.
2. Select the desired channel.
3. Press and hold one of the preset buttons (from 1 to 6) to store the channel. If the button is pressed briefly, the preceding selection will remain in memory.

NOTE

- **Up to six SAT1, SAT2 and SAT3 channels each may be preset.**
- **If the connection between the radio and battery is broken for any reason such as vehicle maintenance or radio removal, all channels stored in the preset buttons are cleared. If this occurs, it is necessary to reset the preset buttons.**

▼ **Selecting preset channels**

1. Press the “SAT” button to select SAT1, SAT2 or SAT3 reception.
2. Press the preferred preset button briefly.

■ Display selection

Type A audio	TEXT
Type B audio	TEXT

Press the “TEXT” button while receiving the satellite radio to change the display as follows.

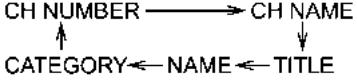

CD player operation

NOTE

- **Make sure to always insert a disc with the label side up. If a disc is inserted with the label side down, the player displays “CHECK DISC”. Refer to “When the following messages are displayed” ☞5-22.**
- **If a disc is inserted during a radio broadcast, the disc will interrupt the broadcast.**
- **After the last song finishes, the disc will automatically return to track 1 (the first track on the disc) and will automatically play back.**
- **The player is designed to be able to play music CD-Rs and music CD-RWs, but it may not be able to play certain ones.**
- **Mini CDs (i.e., 8 cm/3 inch CDs) are not supported, and if inserted, they will be immediately ejected.**
- **CDs that can be played back are accompanied by the following restrictions.**
  - **– Maximum number of folders: 255**
  - **– Maximum number of files in a folder: 255**
  - **– Maximum number of files on a CD: 510**

■ Play file

NOTE

• Copyright protected MP3/WMA/AAC files will not be played by the system. The player will automatically skip to the next file (track).

• WMA9 Lossless, WMA9 Professional and WMA9 voice cannot be played.

MP3:

- Based on MPEG1, 2 and 2.5 Layer3
- Sampling rate (kHz): 48, 44.1, 32, 24, 22.05, 16, 12, 11.025, 8
- Bit rate (kbps): 8 to 320
- Supports variable bit rates

WMA:

- Based on Windows Media Audio 9
- Bit rate (kbps): 32 to 192

AAC (type B audio):

- Based on MPEG4 AAC (ISO/IEC 14496-12: 2003+iTune Meta-data Specification)
- Sampling rate (kHz): 48, 44.1, 32, 24, 22.05, 16, 12, 11.025, 8
- Bit rate (kbps): 8 to 320
- Number of channels: 1 to 2ch

■ How to insert a CD(s) (type A)

1. Briefly press the "LOAD" button. If the magazine in the player has a spare slot where you can insert a disc, the disc number indicator associated with the spare slot will blink.

If no indicator blinks, it means that there are no spare slots in the magazine.

2. When the "LOAD" indicator illuminates, insert the disc. Once you have inserted the disc, the "LOAD" indicator will turn off. The disc will then be automatically drawn in, and the player will begin to play back the first track of the disc.

- To insert more discs in succession, repeat steps 1 and 2. The magazine will be loaded with discs in the ascending order of slot number.

If you do not insert any disc within 15 seconds after you have pressed the "LOAD" button, the player will begin to play back the first track of the last disc you have inserted.

- The disc indicator lights up continuously if a disc is already inserted in the corresponding position of the magazine.
- While the player is in the loading mode, if you press "FM•AM" or "SAT" button, the player will enter the standby mode. Press the "CD•AUX" button to start playback.

▼ Inserting a disc in a desired position

1. Briefly press the "LOAD" button. If the magazine in the player has a spare slot where you can insert a disc, the disc number indicator associated with the spare slot will blink.

The slots in the magazine the indicator of which steadily lights up are already loaded with discs.

2. Press the disc select button (from "1" to "6") at the slot where you want to insert a disc.

3. When the "LOAD" indicator illuminates, insert the disc. Once you have inserted the disc, the "LOAD" indicator will turn off. The disc will then be automatically drawn in, and the player will begin to play the first track on the disc.

- If you wish to insert another disc, repeat the procedure beginning with step 1.

If you do not insert any disc within 15 seconds after you have pressed the "LOAD" button, the player will begin to play back the first track of the last disc you have inserted.

- While the player is in the loading mode, if you press "FM•AM" or "SAT" button, the player will enter the standby mode. Press the "CD•AUX" button to start playback.

– CONTINUED –

▼ **Loading all the magazine (full disc loading mode)**

1. If you press and hold the LOAD button, the player will produce beep sound and will enter the full disc loading mode.
2. When the disc number indicator flashes and “ALL LOAD” indicator illuminates, insert a disc within 15 seconds. If a disc is successfully loaded during this period, the disc number indicator will stop blinking and will steadily light.
3. When the loading of a disc is complete, the next disc number indicator will blink. Then repeat step 2.
4. When the magazine is filled with discs by repeating steps 2 and 3, the player will start playback of the discs, beginning with the one inserted first.

If you fail to insert any disc during each 15 seconds interval, the full disc loading mode will be canceled, and the player will start playback of the disc inserted first.

■ How to insert a CD (type B)

Hold the disc with a finger in the center hole while gripping the edge of the disc, then insert it into the slot (with the label side up) and the player will automatically pull the disc into position.

NOTE

DO NOT INSERT TWO DISCS INTO THE DISC INSERTION SLOT AT THE SAME TIME.

■ How to play back a CD

▼ **When there is no CD inserted**

Properly insert a CD. Refer to “How to insert a CD(s) (type A)” ☞5-17/“How to insert a CD (type B)” ☞5-18.

When a CD is loaded, the player will start playback of the CD, beginning with the first track.

▼ **When there are CDs loaded (type A)**

Press the preferred disc select button (from 1 to 6). If a disc is loaded in any slot, the corresponding disc number indicator will be constantly illuminated. The player will then start playback of the selected CD, beginning with the first track.

If a disc that the player cannot read has been loaded, the player will display the message “CHECK DISC”.

▼ **When CD is in the player (type B)**

Each brief press of the CD/AUX button changes the modes in the following sequence.

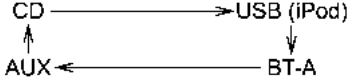

When the CD mode is selected, the player will start playback.

■ To select a track from the beginning

Type A audio	
Type B audio	

Turn the “TUNE/TRACK/CH” dial clockwise to skip to the beginning of the next track/file. Each time the dial is turned, the indicated track/file number will increase.

Turn the “TUNE/TRACK/CH” dial counterclockwise to skip to the beginning of the current track/file. Each time the dial is turned, the indicated track/file number will decrease.

NOTE

With an MP3, WMA or AAC (type B audio):

- **Skipping past the last track/file will take you back to the first track/file in the folder.**
- **Skipping past the first track/file will take you to the last track/file in the folder.**

■ Fast-forwarding and rewinding

Type A audio:

Fast-forward	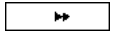
Rewind	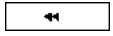

Type B audio:

Fast-forward	
Rewind	

Press and hold the "▶▶" button to fast-forward the track. Release the button to stop fast-forwarding.

Press and hold the "◀◀" button to rewind the track. Release the button to stop rewinding.

NOTE

- **If you fast-forward to the end of the last track, fast-forwarding will stop and the player will start playback beginning with the first track. For an MP3, WMA or AAC (type B audio) folder, the player will start playback beginning with the first track of the next folder.**
- **If you rewind to the beginning of the first track, rewinding will stop and the player will start playback. For an MP3, WMA or AAC (type B audio) folder, the player will start playback beginning with the first track of the current folder.**

■ Repeating

Type A audio	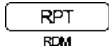
Type B audio	

To repeat a track/file, briefly press the "RPT/RDM" button while the track/file is playing.

Each time you briefly press the button, the mode changes in the following sequences.

Type A audio:

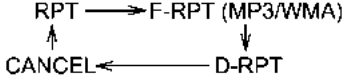

Type B audio:

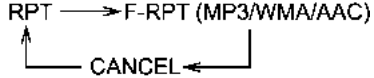

NOTE

- **The "RPT" indication refers to the repeat playback of a single track. It repeats the track that is playing.**
- **The "F-RPT" indication refers to the repeat playback of a folder. It repeats the all of the tracks in the folder. It is possible to select the function when the MP3/WMA/AAC format track is playing.**
- **The "D-RPT" indication refers to the repeat playback of a disc. It repeats the tracks on the CD. It is only possible to select this function for type A audio.**

To cancel the track/file repeat-play mode, briefly press the "RPT/RDM" button and select CANCEL. The "RPT" indication will turn off, and the normal playback mode

– CONTINUED –

will be resumed.

NOTE

The repeat-play mode will be cancelled if you perform any of the following steps.

- **Press the "⏏" button**
- **Press the disc select button (type A audio)**
- **Press the "SCAN" button**
- **Press the "LOAD" button when there is free space in the CD magazine (type A audio)**

■ Random playback

Type A audio	RPT RDM
Type B audio	RPT/RDM

To playback tracks at random, press and hold the "RPT/RDM" button while a track is playing.

Each time you press and hold the button, the mode changes in the following sequences.

Type A audio:

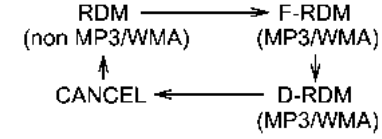

Type B audio:

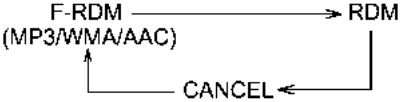

NOTE

- **The "RDM" indication refers to the random playback of the tracks. It randomly repeats the tracks on the CD. It is possible to select the function when formats other than the MP3/WMA/AAC format CD is playing.**
- **The "F-RDM" indication refers to the random playback in the folder. It randomly repeats the tracks in the folder. It is possible to select the function when an MP3/WMA/AAC format track is playing.**
- **The "D-RDM" indication refers to the random playback of a disc. It randomly repeats the tracks on the CD. It is possible to select the function when an MP3/WMA format track is playing.**

To cancel the random playback mode, press and hold the "RPT/RDM" button again and select CANCEL.

The "RDM" indication will turn off, and the normal playback mode will be resumed.

NOTE

Random playback will be cancelled if you perform any of the following steps.

- **Press the "⏏" button**
- **Press the disc select button (type A audio)**
- **Press the "SCAN" button**
- **Press the "LOAD" button when there is free space in the CD magazine (type A audio)**

■ Scan

Type A audio	SCAN
Type B audio	SCAN

The scan mode lets you listen to the first 10 seconds of each track/file in succession. Press the "SCAN" button to start scanning upward beginning with the track/file(s) following the currently selected one.

After all track/file(s) in the disk/folder have been scanned, normal playback will be

resumed. To cancel the scan mode, press the “SCAN” button again.

NOTE

The scan mode will be cancelled if you perform any of the following steps.

- **Press the “RPT/RDM” button**
- **Turn the “TUNE/TRACK/CH” dial**
- **Press the “▼” or “▲” side of the “FOLDER/PTY/CAT” button**
- **Press the “▲” button**
- **Press the disc select button (type A audio)**
- **Select the radio or AUX mode**
- **Press the “LOAD” button when there is free space in the CD magazine (type A audio)**
- **Press the “PTY/CAT” button**
- **Turn off the power of the audio equipment**
- **Turn the ignition switch to the “LOCK” position**

■ Display selection

Type A audio	
Type B audio	

If you press the “TEXT” button during playback, the indication will change to the next one in the following sequence.

For CD-DA:

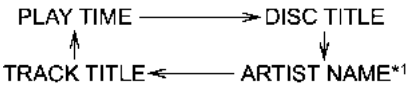

For MP3/WMA/AAC:

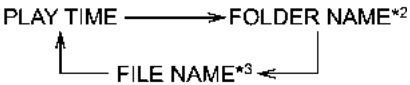

For iPod®:

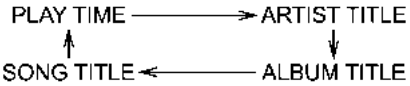

*1: For type B audio, “ARTIST TITLE” is displayed.

*2: For type B audio, “FOLDER TITLE” is displayed.

*3: For type B audio, “FILE TITLE” is displayed.

▼ Page (track/folder title) scroll

If you press the “TEXT” button while the title (name) is displayed again and hold it, the title will be scrolled so you can see all of it.

NOTE

- **The display is designed to show titles for up to 24 characters.**
- **If no operations are performed for 10 seconds, the screen that was displayed before pressing and holding the “TEXT” button will be shown.**

■ Folder selection

NOTE

- **Selecting folders in this way is possible only within a single disc.**
- **Only MP3/WMA/AAC folders are recognized when an attempt to select the next or previous folder is made. If no appropriate folder exists on the disc, pressing the “▲” or “▼” side of the “FOLDER/PTY/CAT” button starts playback beginning with the first track/file.**

Press the following buttons briefly.

Type A audio:

To select the next folder	
To go back to the previous folder	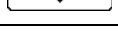

– CONTINUED –

Type B audio:

To select the next folder	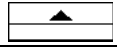
To go back to the previous folder	

■ How to eject CDs from the player (type A)

▼ Ejecting a CD from the player

Of the discs loaded, you can select and remove only one disc.

1. Press the disc select button (from 1 to 6) to select the disc to be ejected.
2. Briefly press the ▲ button. The selected disc will be ejected. The disc number indicator will flash at this time. When you remove the ejected disc, the disc number indicator will turn off.

To remove more discs in succession, repeat steps 1 and 2.

▼ Ejecting all discs from the player (all disc ejection mode)

1. If you press and hold the ▲ button, the player will produce beep sound and will enter the all disc ejection mode. At this time, the disc number indicator and “ALL EJECT” indicator will flash.
2. Remove the disc that has been ejected. The other discs loaded will then be ejected one after another. If you do not remove the disc that has been ejected, the “All disc ejection mode” will be canceled.

NOTE

- **Avoid driving the vehicle with a CD sticking out. The CD may fall out due to vibration.**
- **If you press the ▲ button while the player is in all disc ejection mode, the mode will be cancelled following ejection of the disc that is currently being ejected.**
- **If you press the CD AUX button or LOAD button while the player is in all disc ejection mode, the player will draw in the discs that have been ejected and play them.**

■ How to eject a CD from the player (type B)

When a disc is being played back or when a disc is in the player, press the ▲ button. The disc will be ejected.

NOTE

- **Avoid driving the vehicle with a CD sticking out. The CD may fall out due to vibration.**
- **If the disc is left ejected for more than approximately 15 seconds, a disc protection function will operate, automatically reloading the disc. In this case, the disc is not played.**

■ When the following messages are displayed

If one of the following messages is displayed while operating the CD player, determine the cause based on the following information. If you cannot clear those messages, please contact your SUBARU dealer.

▼ When “PUSH EJECT” is displayed

Press the ▲ button to eject the disc. Check the disc for damage or deformation, and also check that the correct disc is inserted. Do not try to eject the disc forcibly. Single CDs (i.e., 8 cm/3 inch CDs) are not supported, and if inserted, they will be immediately ejected and this message will be displayed. If the disc cannot be ejected or this message remains displayed, please contact your SUBARU dealer.

▼ When “CHECK DISC” is displayed

Press the ▲ button to eject the discs. Check that the disc is not damaged or scratched, and also check that the disc is inserted correctly. This message may appear when using some CD-RW discs.

Check that the disc type (i.e., 8 cm/3 inch CDs are not supported) and data format are correct. This player can only play MP3, WMA and AAC (type B audio) data formats. If the disc cannot be ejected or this message remains displayed, please contact your SUBARU dealer.

Auxiliary input jack (if equipped)

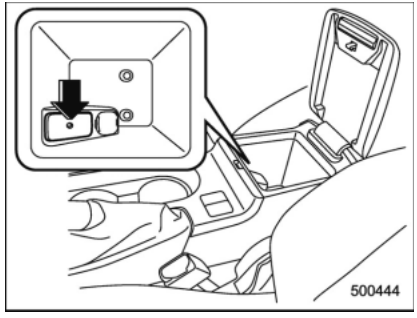

Type A AUX input jack

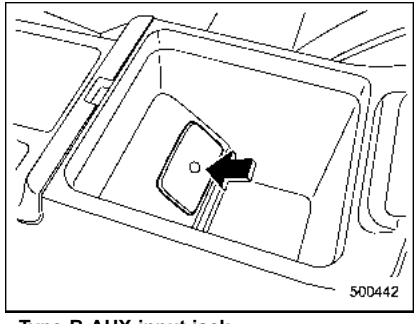

Type B AUX input jack

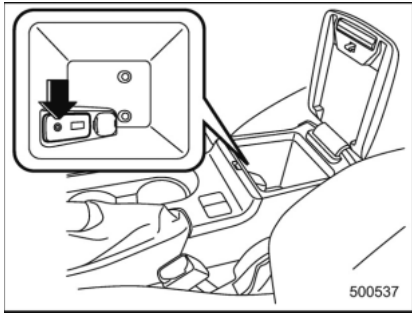

Type C AUX input jack

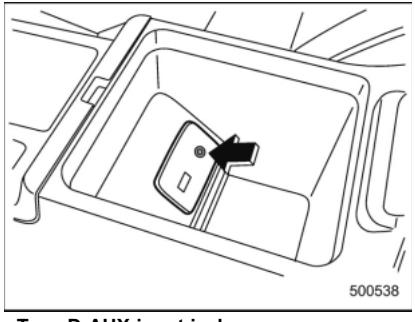

Type D AUX input jack

You can connect an external audio device to the vehicle's audio system and play back audio via the vehicle's speakers.

An auxiliary (AUX) input jack is equipped

– CONTINUED –

in the center console. A stereo mini pin plug (3.5ø) can be inserted in this jack. The connection cable is available at electrical appliance or similar stores.

To use the AUX input jack:

1. Connect a portable audio player to the AUX input jack.

Type A audio	
Type B audio	

2. Press the AUX input selection button “CD/AUX” on the audio control panel to turn on the auxiliary audio input.
3. Play back the portable audio player. Refer to the Owner’s Manual of the portable audio player.

NOTE

• The AUX jacks of the models with the genuine SUBARU navigation system are the RCA type. For detailed information, refer to the Owner’s Manual supplement for the navigation system.
• The output sound of the portable audio player is not loud, and the sound via the vehicle’s speakers that are connected to the vehicle audio set may be very low. If you turn up the volume of the audio set, the volume becomes louder. However, when you change from one portable audio player to another one, the volume levels via the vehicle’s speakers may be significantly louder compared to the prior device. To avoid a large volume difference, turn down the volume when you change between portable audio players.
• In some cases, when the sound volume of the portable audio player is low, sound quality may become impaired when you turn up the volume of the vehicle audio system. In this case, adjust the sound volume of the portable audio player.
• In some cases, noise occurs because of a bad connection between the portable player and the audio system. Try cleaning the stereo jack and audio plug.
• If the noise is not reduced, check for disconnection of the cord or a malfunction of the portable player.

Precautions to observe when handling a compact disc

Use only compact discs (CDs, CD-Rs and CD-RWs) that have the mark shown in the following. Also, some compact discs cannot be played.





- You cannot use a DualDisc in the CD player. If you insert a DualDisc into the player, the disc may not come out again, possibly causing the player to malfunction.
- In cold and/or rainy weather, dew can form inside the CD player, preventing normal operation. If this happens, eject the CD and wait for the player to dry out.
- Skipping may occur when the CD player is subjected to severe vibration (for example, when the vehicle is driven on a rough surface).
- To remove a disc from the case, press the center of the case and hold both edges of the disc. If the disc surface is touched directly, contamination could cause poor tone quality. Do not touch the disc surface.
- Use a clean disc whenever possible. If there are deposits, wipe the disc surface from the center outward with a dry, soft cloth. Be sure not to use a hard cloth, thinner, benzine, alcohol, etc.
- Do not use any disc that is scratched, deformed, or cracked. Also, do not use any disc that has a non-standard shape (for example, a heart shape). Malfunctions or problems might result.
- A disc is vulnerable to heat. Never keep it either in places exposed to direct sunlight, near heaters or in vehicles parked in the sun or on hot days.
- Insert discs one by one into the CD player (type A audio).

– CONTINUED –

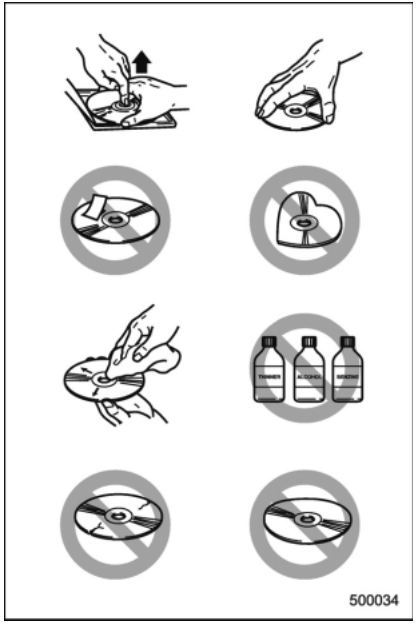

USB storage device / iPod® operations (type B audio)

■ Play file

Refer to “Play file” ☞5-17.

■ Connectable USB storage device

Mass storage class USB memory can be connected. USB storage devices that can be played back are accompanied by the following restrictions.

- Maximum directory layers: 8 layers (including the ROOT)
- Maximum number of files in a folder: 255
- Maximum number of folders: 512 (including the ROOT)
- Maximum number of files in the device: 130,560

NOTE

- **HUB class USB memory cannot be played.**
- **ATAPI subclass USB cannot be played.**
- **High Speed USB 2.0 cannot be played.**
- **A USB memory that is powered by a source other than the USB power supply (for example, an AC power adapter, etc.) cannot be operated.**
- **A USB memory that is connected to the memory card reader or multi card reader cannot be operated.**
- **If the USB memory consists of two drives or more, the system will recognize only one of the drives after connecting the USB memory.**
- **The contents stored on the USB memory may not be played in the same order as they appear on a personal computer.**
- **A personal computer cannot be used even if it is connected to the system using a USB cable.**
- **If the USB memory has a security function, the contents stored on the USB memory cannot be played by the system.**
- **A USB memory and an iPod® cannot be connected to the system at the same time.**

■ Connectable iPod® models

Model		Firmware version
iPod®	with video	1.3
	classic	2.0.4
	nano 1G	1.3.1
	nano 2G	1.1.3
	nano 3G	1.1.3
	nano 4G	1.0.4
	nano 5G	1.0.2
	nano 6G	1.0
	touch 1G	3.1.3
	touch 2G	3.1.3
	touch 3G	4.1
	touch 4G	4.1
iPhone®	1G	3.1.3
	3G	3.1.3
	3G S	3.1.3
	4G	4.1

⚠ CAUTION

Do not connect an iPod® other than the previously stated models. Doing so may result in a malfunction or, depending on conditions, cause a fire.

NOTE

- **iPod® is a registered trademark of Apple Inc.**
- **You are only permitted to personally copy and play copyright-free material or material that is legally permitted to be copied and played by using an iPod® and iTunes. Copyright infringement is prohibited by law.**
- **To check the firmware version of an iPod®, connect it to a computer and check the device manager. For further information, see the User's Guide for the iPod®.**
- **To update the firmware version of an iPod®, visit the Apple Inc. website.**
- **Depending on the model and firmware version of an iPod®, it may not work properly or not operate at all.**

■ Connecting USB storage device / iPod®

⚠ WARNING

Do not operate an iPod® while driving. Doing so may distract your attention from driving and could lead to an accident.

⚠ CAUTION

- **If the data stored on an iPod® is deleted while it is connected to the in-vehicle system, the data cannot be recovered.**
- **Do not store an iPod® in the vehicle. If an iPod® is left in the vehicle for a long period of time, it may be deformed, discolored or damaged by high temperature.**

NOTE

- **Even if a USB storage device or iPod® is connected, it cannot be played unless the CD/AUX button is pressed.**
- **Movies stored on a USB storage device or an iPod® cannot be played while the storage device or iPod® is connected to the system.**
- **While an iPod® is connected, the**

– CONTINUED –

iPod® cannot be operated using the click wheel on the iPod® (except some models).

- **When using an iPod® by connecting it to in-vehicle equipment, the order of the list items displayed on the in-vehicle equipment may be different from that on the iPod®. However, this does not indicate a malfunction.**
- **An iPod® battery that is connected to in-vehicle equipment will be charged when the ignition switch is in the "ON" or "Acc" position. However, activation of the iPod® may be delayed if the battery charge of the iPod® is low.**
- **If an iPod® does not activate after operation, disconnect the connection cable from the iPod® and reset it. For the resetting procedure, see the User's Guide of the iPod®.**
- **If an iPod® and the connection cable are connected improperly, the iPod® cannot be powered on or will not be recognized by in-vehicle equipment. In this case, disconnect the connection cable from the iPod®, and then connect it again.**

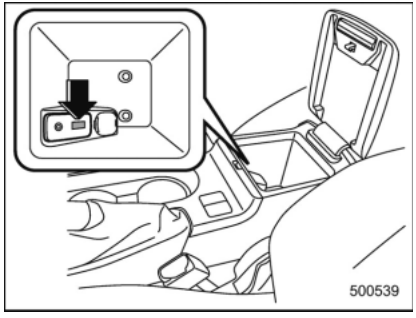

Except STI

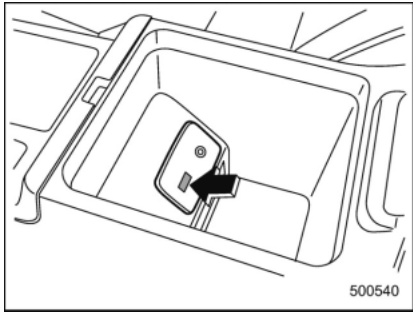

STI

The USB connector is located in the center console. Use the connector to connect a USB storage device / iPod®.

■ How to play back

1. Connect a USB storage device / iPod®.
2. Press the CD/AUX button. Each time you briefly press the button, the mode changes in the following sequence.

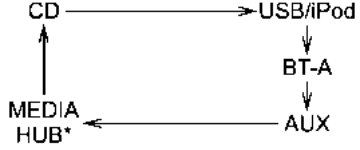

*: Only when a Media Hub is connected.

When the USB/iPod® mode is selected, the player will start playback of the USB storage device / iPod®.

NOTE

- **Depending on the number of files stored on the iPod® and the firmware version, the iPod® may not activate smoothly after operation or not work properly.**
- **Do not disconnect the connector from the iPod® during iPod® operation.**

■ To select a track from the beginning

Select a track in the same way as for a CD. For details, refer to “To select a track from the beginning” ☞5-18.

■ To select a chapter from the beginning when connecting iPod®

When playing podcasts or audiobooks, select a chapter in the same way as for a CD. For details, refer to “To select a track from the beginning” ☞5-18.

■ Fast-forwarding and rewinding

Fast-forwarding and rewinding are operated in the same way as for a CD. For details, refer to “Fast-forwarding and rewinding” ☞5-19.

NOTE

When connecting iPod®:

- **When the end of a track is reached while fast-forwarding, fast-forwarding ends and play begins from the beginning of the next track.**
- **When the beginning of a track is reached while rewinding, rewinding ends and play begins from the beginning of the track.**

■ Repeating

▼ When connecting USB storage device

Repeating is operated in the same way as for a CD. For details, refer to “Repeating” ☞5-19.

▼ When connecting iPod®

Each time you briefly press the RPT·RDM button, the mode changes in the following sequence.

ALL RPT ⇄ SONG RPT

NOTE

- **The “ALL RPT” indication refers to the repeat playback of all tracks on the entire iPod®.**
- **The “SONG RPT” indication refers to the repeat playback of a single track. It repeats the track that is playing.**
- **When an audiobook is playing, the mode does not change even if you press the RPT·RDM button.**

■ Random playback

To playback tracks at random, press and hold the RPT·RDM button while a track is playing.

Each time you press the button, the mode changes in the following sequence.

When connecting USB storage device:



When connecting iPod®:



NOTE

- **The “FOLDER RDM” indication refers to the random playback in the folders. It randomly repeats all of the tracks in the folder.**
- **The “ALL RDM” indication refers to the random playback on the entire USB storage device. It randomly repeats all of the tracks in the USB storage device.**
- **The “ALBUM RDM” indication refers to the shuffle playback in the album. It randomly repeats all of the tracks on the album.**
- **The “SONG RDM” indication refers to the shuffle playback in the entire**

– CONTINUED –

iPod®. It randomly repeats all of the tracks on the iPod®.

- **When an iPod® is connected, the files are played back at random by the shuffle function of the iPod®. Therefore, iPod® operation may be different depending on the model of the connected iPod®.**
- **When an audiobook or a podcast is playing, the mode does not change even if you press and hold the RDM button.**

To cancel the random playback mode, press and hold the RDM button and select CANCEL. The "RDM" indication will turn off, and the normal playback mode will resume.

■ SCAN (only when connecting USB storage device)

Scan is operated in the same way as for a CD. For details, refer to "Scan" ☞5-20.

NOTE

When an iPod® is connected, you cannot select the SCAN mode.

■ Selecting category (only when connecting iPod®)

When the LIST button is pressed briefly, the iPod® menu is displayed.

Each time you turn the "TUNE/TRACK/CH" dial clockwise, the displayed category changes in the following sequence. Each time you turn the "TUNE/TRACK/CH" dial counterclockwise, the displayed category changes in the opposite sequence.

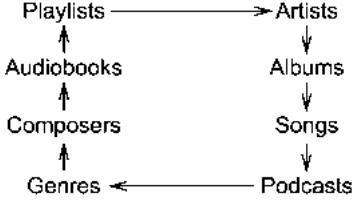

To select the category, press the "TUNE/TRACK/CH" dial. To close the iPod® menu, press and hold the LIST button. To return to the previous screen, briefly press the LIST button.

■ Display selection

Refer to "Display selection" ☞5-21.

▼ Page scroll

Refer to "Page (track/folder title) scroll" ☞5-21.

■ Folder selection (only when connecting USB storage device)

Refer to "Folder selection" ☞5-21.

NOTE

When an iPod® is connected, you cannot select a folder.

■ When "CHECK DEVICE" is displayed

This message is displayed under the following conditions.

- When there is a short in the USB bus
- When an unsupported device (for example a USB mouse) is connected
- When an unsupported iPod® is connected
- When a connected iPod® is frozen
- When a transmission malfunction occurs
- When an iPod® confirmation malfunction occurs
- When a HUB class USB storage device is connected

Disconnect the USB storage device/iPod® and check it.

Audio control buttons

These buttons are located on the spokes of the steering wheel. They allow the driver to control audio functions without taking his/her hands off the steering wheel.

■ MODE button

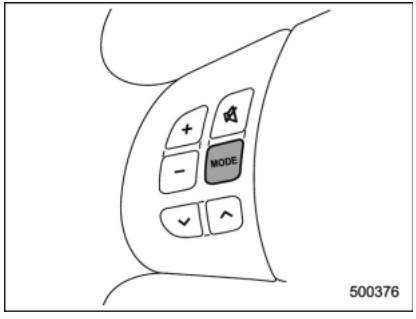

Models without Hands-free system

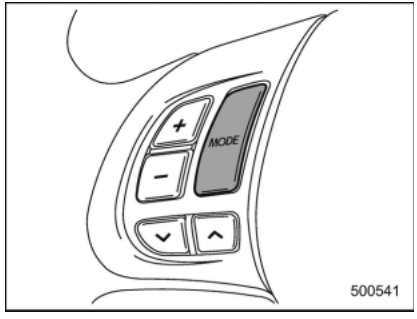

Models with Hands-free system

The “MODE” button is used to select the desired audio mode. Each time it is pressed, the mode changes to the next one in the following sequence:

Type A audio:

FM*1 → AM*1 → SAT*1 → CD*2 → AUX*3 → FM*1

Type B audio:

FM*1 → AM*1 → SAT*1 → CD*2 → USB/iPod*3 → BT-A*3 → AUX*3 → MEDIA HUB*3 → FM*1

*1: The frequency last received in the selected waveband will be displayed.

*2: Only when a CD is in the player.

*3: Only when the device is connected.

▼ Models with Hands-free system

Press and hold this button if you wish to immediately cut the volume to zero.

The audio display will show “MUTE”.

If you press and hold the button again, the original sound volume will return and “MUTE” turns off.

■ “∧” and “∨” buttons

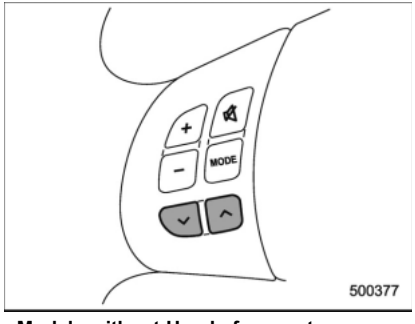

Models without Hands-free system

– CONTINUED –

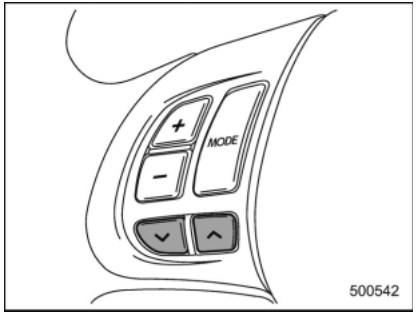

Models with Hands-free system

▼ With radio mode selected

Press the "∧" button or "∨" button. The radio will seek the next receivable station and stop on it. That station's frequency will be shown on the audio display.

▼ With CD mode selected

Press the "∧" button to skip forward in the track/file order. Press the "∨" button to skip backward in the track/file order. The track/file number will be shown on the audio display.

For models with the Hands-free system, press and hold the "∧" button to select the next folder. Press and hold the "∨" button to go back to the previous folder.

▼ With SAT mode selected

Press the "∧" button to skip forward in the channel order. Press the "∨" button to skip backward in the channel order.

The channel will be shown on the audio display.

■ Volume control buttons

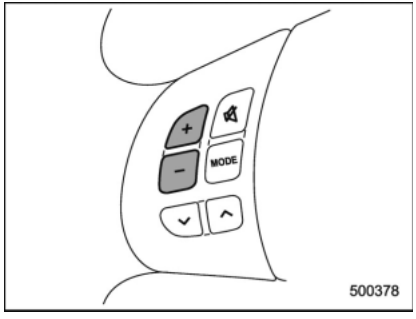

Models without Hands-free system

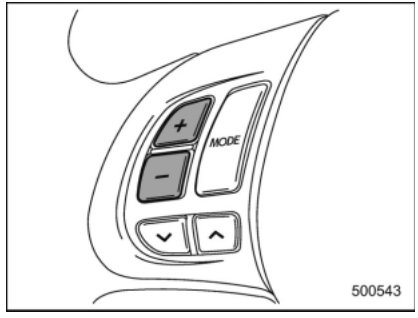

Models with Hands-free system

Press the "+" button to increase the volume. Press the "−" button to reduce the volume.

A number indicating the volume will be shown on the audio display.

■ MUTE button (models without Hands-free system)

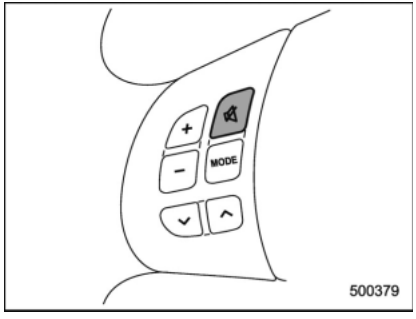

Press the "🔇" button if you wish to immediately cut the volume to zero.

The audio display will show "MUTE".

If you press the button again, the original sound volume will return and "MUTE" turns off.

Bluetooth® audio (type B audio)

NOTE

For models with the genuine SUBARU navigation system, refer to the Owner's Manual supplement for the navigation system.

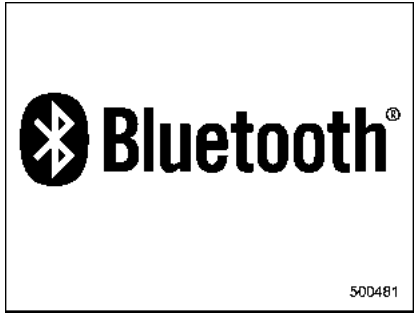

NOTE

The Bluetooth word mark and logo are registered trademarks of Bluetooth SIG, Inc.

This function enables you to play back audio sources recorded in **Bluetooth®** audio devices. You need to register the **Bluetooth®** audio device in the system before using it.

■ Media format

Bluetooth® audio devices cannot be connected if they are not compatible with the following **Bluetooth®** profiles.

- A2DP (Advanced Audio Distribution Profile)
- AVRCP (Audio/Video Remote Control Profile)

■ Setting Bluetooth® audio

1. Select the "BT-A SETUP" menu by pressing the "MENU" button. For details, refer to "Other sound setting controls" ☞5-7.
2. Perform the following procedure by operating the "TUNE/TRACK/CH" dial while "BT-A" is displayed.

NOTE

You cannot set a Bluetooth® audio while driving.

▼ Registering (pairing) device

1. Select the "PAIR AUDIO" menu.
   – If a device is already registered, "MEMORY FULL" is displayed and the mode changes to the **Bluetooth®** audio setting mode.
2. After the passkey is shown on the display, input the passkey into the cell

– CONTINUED –

phone.

– If you input the correct passkey, “PAIRED” is displayed and the registering procedure is finished.

– If you input an incorrect passkey, “FAILED” is displayed, the registering procedure was not successful and the mode changes to the **Bluetooth®** audio setting mode.

▼ Selecting device

1. Select the “SELECT AUDIO” menu.
   – If no devices are registered, “EMPTY” is displayed and the mode changes to the **Bluetooth®** audio setting mode.
2. Select the “CONFIRM” menu.
   – If the device is connected, “SELECTED” is displayed and the selecting procedure is finished.
   – If the device cannot be connected, “FAILED” is displayed and the selecting procedure was not successful.

▼ Setting passkey

1. Select the “SET PASSKEY” menu.
   – After the currently set passkey is displayed, a new passkey can be entered.
2. Input the new passkey by operating the “TUNE/TRACK/CH” dial.
3. Select the “CONFIRM” menu.
   – The new passkey is displayed, the passkey is changed and the mode changes to the **Bluetooth®** audio setting mode.

▼ Deleting device

1. Select the “DELETE AUDIO” menu.
   – If no devices are registered, “EMPTY” is displayed and the mode changes to the **Bluetooth®** audio setting mode.
2. Select the “CONFIRM” menu.
   – “DELETED” is displayed and the mode changes to the **Bluetooth®** audio setting mode.

■ Bluetooth® audio operation

NOTE

Depending on the connected device, it may not activate as per the following items or not work smoothly.

▼ How to play back

Press the CD/AUX button and select the “BT-A” mode.

▼ To select a track from its beginning

Select a track in the same way as for a CD. Refer to “To select a track from the beginning” ☞5-18.

▼ Repeating

Repeating is operated in the same way as for a CD. Refer to “Repeating” ☞5-19. Each time you briefly press the RPT/RDM button, the mode changes in the following sequence.

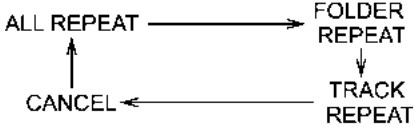

▼ Random playback

Random playback is operated in the same way as for a CD. Refer to “Random playback” ☞5-20. Each time you press and hold the RPT/RDM button, the mode changes in the following sequence.

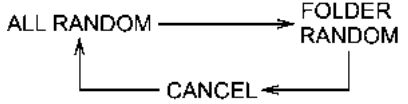

▼ Display selection

Select an indication in the same way as for a CD. Refer to “Display selection” ☞5-21. Each time you briefly press the TEXT button, the indication changes in the following sequence.

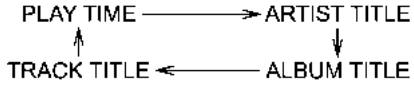

▼ **Folder selection**

Select a folder in the same way as for a CD. Refer to “Folder selection” ☞5-21.

Hands-free system (if equipped)

NOTE

• For models with the genuine SUBARU navigation system, refer to the Owner’s Manual supplement for the navigation system.

• When selling your vehicle, make sure that you initialize the Hands-free system to prevent personal data from being improperly accessed.

The Hands-free system operates while the ignition switch is in the “Acc” or “ON” position.

■ Tips for the Hands-free system

▼ **Bluetooth®**

It is possible to connect a cell phone to the in-vehicle equipment through the **Bluetooth®** format (wireless) to make a phone call from the in-vehicle equipment or take an incoming phone call.

Since the **Bluetooth®** format is wireless, a connection between the in-vehicle equipment and the cell phone can be made without placing them in close proximity of each other. The cell phone can be used with it left in the breast pocket or bag.

NOTE

• The Hands-free system may not operate properly under the following conditions.

– The cell phone is turned off.

– The cell phone is not in the phone call area.

– The battery of the cell phone has run down.

– The cell phone is not connected to the Hands-free system.

– The cell phone is behind the seat or in the glove box.

– A metal material covers or touches the cell phone.

• Depending on the type of cell phone that is used, the screen on the cell phone may remain illuminated while the ignition switch is in the “ON” position. If this occurs, turn the illumination off by adjusting the cell phone settings.

• Depending on the setting of the cell phone, the dial lock function may be activated after making a call. Deactivate the automatic dial lock function of the cell phone before using the Hands-free system.

• Depending on the type of cell phone that is used, operation and the sound volume may be different from those of cell phones currently used.

– CONTINUED –

- When the ignition switch is turned to the "LOCK" position during a call, the call may be disconnected or continued on the cell phone depending on the type of cell phone that is used. Note that operation of the cell phone may be necessary if the call is continued on the cell phone.
- Do not speak at the same time as the other party during a call. If you and the party speak at the same time, it may be difficult for the other party to hear your voice and vice versa. This is normal.
- The receiver sound volume should be set as low as possible. Otherwise, the party you are calling may notice an undesirable echo sound.
- Speak clearly and loudly.
- Your voice may be difficult to be heard by the party under the following conditions.
  - Driving on a rough road.
  - Driving at a high speed.
  - Driving with a window open.
  - When air from the ventilator blows directly towards the microphone.
  - When the sound coming from the ventilator is loud.
  - When the cell phone is too close to the microphone.
- The sound quality may degrade due to the influence of the cell phone that is connected to the system or the circumstances of the Bluetooth network.
- When another Bluetooth® device is simultaneously connected, noise may be heard in the voice coming from the hands-free phone.

▼ Corresponding profiles for the cell phone

- HFP (Hands Free Profile): Ver. 1.0
- OPP (Object Push Profile): Ver. 1.1

■ Certification for the Hands-free system

⚠ CAUTION

FCC WARNING

Changes or modifications not expressly approved by the party responsible for compliance could void the user's authority to operate the equipment.

NOTE

This device complies with Part 15 of the FCC Rules and RSS-Gen of IC Rules. Operation is subject to the following two conditions: (1) this device may not cause harmful interference, and (2) this device must accept any interference received, including interference that may cause undesired operation.

NOTE

This equipment has been tested and found to comply with the limits for a Class B digital device, pursuant to Part 15 of the FCC Rules. These limits are designed to provide reasonable protection against harmful interference in a residential installation. This equipment may cause harmful interference to radio communications, if it is not installed and used in accordance with the instructions. However, there is no guarantee that interference will not occur in a particular installation. If this equipment does cause harmful interference to radio or television reception, which can be determined by turning the equipment off and on, the user is encouraged to try to correct the interference by one or more of the following measures.

- Reorient or relocate the receiving antenna.
- Increase the separation between the equipment and receiver.
- Connect the equipment into an out-

let on a circuit different from that to which the receiver is connected.
• Consult the dealer or an experienced radio/TV technician for help.
• Changes or modifications not expressly approved by the party responsible for compliance could void the user's authority to operate the equipment.
• This equipment complies with FCC/IC radiation exposure limits set forth for an uncontrolled equipment and meets the FCC radio frequency (RF) Exposure Guidelines in Supplement C to OET65 and RSS-102 of the IC radio frequency (RF) Exposure rules. This equipment has very low levels of RF energy that it deemed to comply without maximum permissive exposure evaluation (MPE). But it is desirable that it should be installed and operated keeping the radiator at least 20 cm or more away from person's body (excluding extremities: hands, wrists, feet and ankles).
• This transmitter must not be co-located or operated in conjunction with any other antenna or transmitter.

■ Safety precautions

⚠ WARNING

- For safety reasons, avoid operating the cell phone while driving.
- Do not make a phone call while driving. When you have an incoming call, stop the vehicle in a safe location before taking the incoming phone call. When you have to absolutely take a phone call, tell the caller "I'll call you back". And then call the caller back after stopping the vehicle in a safe location.

⚠ CAUTION

- Do not leave the cell phone in the vehicle. The temperature in the vehicle may become extremely high and cause a malfunction of the cell phone.
- When using the cell phone, be careful not to get it close to the in-vehicle equipment. Getting it too close to the in-vehicle equipment may result in deterioration in tone quality or a poor connecting condition.
- In the frequency band used by this equipment, along with industrial, scientific and medical equipment such as a microwave oven, radio stations (a license is required) to be used by the production line in the factory to identify movable bodies, specific small power radio stations (a license is not required) and amateur radio stations (a license is required) are being operated. (These three types of radio stations are hereinafter referred to as "other radio stations.") Before using this equipment, be sure to check to see if "other radio stations" are being operated in the vicinity. If there is detrimental radio interference from this equipment to "other radio stations," move the equipment to another location as soon as possible to avoid radio interference. The frequency band used by this equipment is in the 2.4 GHz zone. The FH-SS modulation is employed as a modulation method. The expected inflicting interference distance is less than 33 ft (10 m). This equipment uses a full band and can avoid a band

– CONTINUED –

used by a movable body identification device.

■ Using the Hands-free system

▼ Turning on/off the Hands-free mode

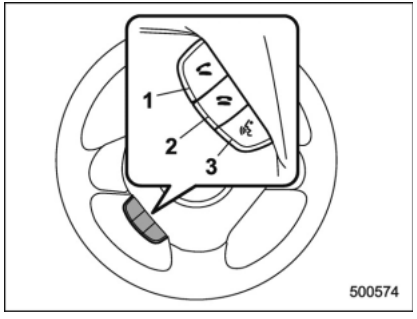

1) OFF hook switch
2) ON hook switch
3) Talk switch

To turn on the Hands-free mode, press the OFF hook switch . To turn off the Hands-free mode, press the ON hook switch .

▼ Preparation for using the Hands-free system

Before using the Hands-free system, it is necessary to register a cell phone in the system. Perform the following procedure to register a cell phone.

1. Press the OFF hook switch .
2. Select “ENGLISH”/“FRANÇAIS” by operating the “TUNE/TRACK/CH” dial.
   – Then “WELCOME!” will be displayed.
3. Press the “TUNE/TRACK/CH” dial or the talk switch .
4. Select the “RECORD NAME” menu.
5. Say the name to be registered.
6. Select the “CONFIRM” menu.
   – After “CAR M_MEDIA” is displayed, a pass key is displayed.
7. Input the displayed pass key into the cell phone while “PKY: ****” is displayed.
   – If you input the correct pass key, “PAIRED” is displayed and the registration procedure is finished.
   – If you input an incorrect pass key, “FAILED” is displayed and the registration procedure was not successful.

NOTE

When the ignition switch is turned to the “Acc” or “ON” position, the registered cell phone may be automatically connected to the system.

▼ Menu list of the Hands-free system

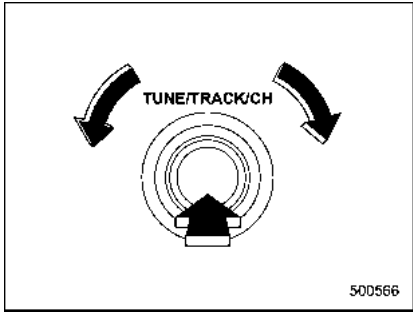

Turn the “TUNE/TRACK/CH” dial to select a menu, and then press the dial to enter the selected menu.

First menu	Second menu	Third menu	Details	Page
PHONE BOOK*	ADD ENTRY	BY VOICE	Adding a new number by voice	5-42
		BY PHONE	Adding a new number by cell phone	5-42
		MANUAL INPUT	Adding a new number by inputting manually	5-42
		CALL HISTORY	Adding a new number from the call history	5-43
		GO BACK		
	LIST NAMES	—	Showing the list of the names registered in the phonebook	5-43
	CHANGE NAME	—	Changing a name registered in the phonebook	5-44
	SET SPD DIAL	—	Registering a speed dial	5-44
	DELETE ENTRY	—	Deleting phonebook data	5-44
	DEL SPD DIAL	—	Deleting a registered speed dial	5-44
	GO BACK	—		
REDIAL	DIAL	—	Redialing	5-45
	STORE	—	Adding a new number stored in the outgoing call history memory	5-43
	DELETE	—	Deleting a number stored in the outgoing call history memory	5-44
	GO BACK	—		
CALLBACK	DIAL	—	Dialing a number stored in the incoming call history memory	5-45
	STORE	—	Adding a new number stored in the incoming call history memory	5-43
	DELETE	—	Deleting a number stored in the incoming call history memory	5-45
	GO BACK	—		

*: If a cell phone is not registered, the menu described in the chart is not indicated.

– CONTINUED –

First menu	Second menu	Third menu	Details	Page
SETUP	SECURITY	SET PIN	Setting a PIN code	5-46
		PHBK LOCK*	Locking the phonebook	5-46
		PHBK UNLOCK*	Unlocking the phonebook	5-46
		GO BACK		
	PHONE SETUP	PAIR PHONE	Registering a new cell phone	5-38
		SELECT PHONE	Selecting a cell phone to be used	5-47
		CHANGE NAME	Changing the registered name of the cell phone	5-47
		LIST PHONES	Showing the list of the registered cell phones	5-47
		SET PASSKEY	Changing the pass key	5-48
		DELETE	Deleting the registered cell phone	5-48
		GO BACK		
	SYSTEM SETUP	GUIDANCE VOL	Setting the volume of the voice guidance	5-48
		INITIALIZE	Initialization	5-48
		SEL LANGUAGE	Selecting the language (using the Hands-free system)	5-48
		GO BACK		
	GO BACK	—		

*: If a PIN code is not registered, the menu described in the chart is not available.

▼ Voice command system

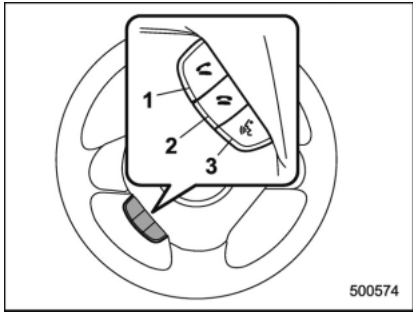

1) OFF hook switch
2) ON hook switch
3) Talk switch

To turn on the voice command system, press the talk switch briefly. To turn off the voice command system, wait for 5 seconds without using the voice command system.

The commands available for the voice command system are listed in the following chart.

	Command	
	English	Français
1	0 (zero, oh)	0 (zéro)
2	1 (one)	1 (un)
3	2 (two)	2 (deux)
4	3 (three)	3 (trois)
5	4 (four)	4 (quatre)
6	5 (five)	5 (cinq)
7	6 (six)	6 (six)
8	7 (seven)	7 (sept)
9	8 (eight)	8 (huit)
10	9 (nine)	9 (neuf)
11	* (star)	* (étoile)
12	# (pound)	# (carré, dièse)
13	+ (plus)	+ (plus)
14	callback	rappel
15	redial	recomposer
16	dial by number	composer par numéro
17	dial by name	composer par nom
18	phonebook	registre
19	setup	réglages
20	phone book add entry	ajouter l'entrée dans le registre
21	phone book change name	modifier le nom dans le registre
22	phone book delete entry	supprimer l'entrée du registre
23	phone book list names	lister les noms du registre
24	phone book set speed dial	configurer composition abrégée pour le registre
25	phone book delete speed dial	supprimer composition abrégée pour le registre
26	phone book unlock	déverrouiller le registre
27	cancel	annuler
28	help	aide
29	repeat	répéter
30	go back	retourner
31	mute	sourdine
32	dial	composer
33	previous	précédent
34	delete	supprimer
35	store	enregistrer
36	confirm	confirmer
37	phone setup	réglages du téléphone

– CONTINUED –

38	security	sécurité
39	pair phone	jumeler le téléphone
40	change name	modifier le nom
41	select phone	sélectionner le téléphone
42	list phones	lister les téléphones
43	set pass key	configurer le passe-partout
44	add entry	ajouter l'entrée
45	delete entry	supprimer l'entrée
46	delete speed dial	supprimer composition abrégée
47	by voice	vocalement
48	by phone	par téléphone
49	call history	historique d'appels
50	set speed dial	configurer composition abrégée
51	incoming	entrant
52	outgoing	sortant
53	list names	lister les noms
54	set PIN	configurer NIP
55	phone book lock	verrouiller le registre

▼ Updating phonebook data

▽ Registering by voice

1. Select the "BY VOICE" menu.
2. Press the talk switch .
3. Say the phone number to be registered.
4. Select the "CONFIRM" menu.
5. Perform either of the following procedures.
   – Select the "RECORD NAME" menu by operating the "TUNE/TRACK/CH" dial.
   – Press the talk switch .
6. Say the name (voice tag) to be registered.
7. Select the "CONFIRM" menu.
   – Then "STORED" is displayed and the mode changes to the registering speed dial mode. Refer to "Registering speed dial" ☞5-43.

▽ Registering by phone

1. Select the "BY PHONE" menu.
2. Select the "CONFIRM" menu.
   – Then "TRANSFER" is displayed.
3. Transfer the data from the cell phone. For details about transferring the data, refer to the instruction manual of the cell phone.
4. Perform either of the following procedures.
   – Select the "RECORD NAME" menu by operating the "TUNE/TRACK/CH" dial.
   – Press the talk switch .
5. Say the name (voice tag) to be registered.
6. Select the "CONFIRM" menu.
   – Then "STORED" is displayed and the mode changes to the registering speed dial mode. Refer to "Registering speed dial" ☞5-43.

▽ Registering by inputting manually

1. Select the "MANUAL INPUT" menu by operating the "TUNE/TRACK/CH" dial.
2. Input the phone number to be registered.
3. Perform either of the following procedures.
   – Select the "RECORD NAME" menu by operating the "TUNE/TRACK/CH" dial.
   – Press the talk switch .
4. Say the name (voice tag) to be registered.
5. Select the "CONFIRM" menu.
   – Then "STORED" is displayed and the mode changes to the registering

speed dial mode. Refer to “Registering speed dial” ☞5-43.

NOTE

While inputting the phone numbers, if “GO BACK” is chosen using the “TUNE/TRACK/CH” dial, the character that was input last is deleted.

▽ Registering from call history

1. Select the “CALL HISTORY” menu.
2. Select “OUTGOING” or “INCOMING” by operating the “TUNE/TRACK/CH” dial.
3. Select the phone number by operating the “TUNE/TRACK/CH” dial.
4. Perform either of the following procedures.
   – Select the “RECORD NAME” menu by operating the “TUNE/TRACK/CH” dial.
   – Press the talk switch .
5. Say the name (voice tag) to be registered.
6. Select the “CONFIRM” menu.
   – Then “STORED” is displayed and the mode changes to the registering speed dial mode. Refer to “Registering speed dial” ☞5-43.

▽ Registering from redial

1. Select the “REDIAL” menu.
2. Select the phone number by operating the “TUNE/TRACK/CH” dial.
3. Select the “STORE” menu.
4. Select the “CONFIRM” menu.
5. Perform either of the following procedures.
   – Select the “RECORD NAME” menu by operating the “TUNE/TRACK/CH” dial.
   – Press the talk switch .
6. Say the name (voice tag) to be registered.
7. Select the “CONFIRM” menu.
   – Then “STORED” is displayed and the mode changes to the registering speed dial mode. Refer to “Registering speed dial” ☞5-43.

▽ Registering from call back

1. Select the “CALL BACK” menu.
2. Select the phone number by operating the “TUNE/TRACK/CH” dial.
3. Select the “STORE” menu.
4. Select the “CONFIRM” menu.
5. Perform either of the following procedures.
   – Select the “RECORD NAME” menu by operating the “TUNE/TRACK/CH” dial.
   – Press the talk switch .
6. Say the name (voice tag) to be registered.
7. Select the “CONFIRM” menu.
   – Then “STORED” is displayed and the mode changes to the registering speed dial mode. Refer to “Registering speed dial” ☞5-43.

▽ Registering speed dial

1. After registering phonebook data, select the “SPEED DIAL” menu.
2. Press the preset button (from to) to which you want to register the phone number.

NOTE

If the number to be used is already registered in speed dial, “OVERWRITE?” will be displayed.

▽ List names function

The voice tags registered in the phonebook are spoken by using the list names function. To use the list names function, perform the following procedure.

1. Select the “LIST NAMES” menu.
2. Select the registered data by performing either of the following procedures.

– CONTINUED –

– Press the talk switch .
– Operate the “TUNE/TRACK/CH” dial.

3. After “SELECTED” is displayed, you can select the following menus.

- “DIAL” to make a phone call
- “CHANGE NAME” to change the name (voice tag)
- “SET SPD DIAL”/“SET SPEED DIAL” to set the speed dial
- “DELETE ENTRY” to delete the name (voice tag) from the phonebook
- “GO BACK” to go back to the menu mode

NOTE

- After “LIST NAMES” is selected, if the OFF hook switch is pushed, the selected number is called.
- After “LIST NAMES” is selected, if no operation is performed, the memories are displayed and voice tags are spoken.

▽ Changing voice tag

1. Select the “CHANGE NAME” menu.
2. Select the phone number by performing either of the following procedures.
   – Operate the “TUNE/TRACK/CH” dial.
   – Press the talk switch and say the voice tag.
3. Select the “CONFIRM” menu.
   – Then the selected phone number/name is displayed.
4. Press the talk switch .
5. Say the new voice tag.
6. Select the “CONFIRM” menu.
   – Then “CHANGED” is displayed.

▽ Set speed dial

1. Select “SET SPD DIAL” by operating the “TUNE/TRACK/CH” dial or select “SET SPEED DIAL” by using the voice command system.
2. Select the phone number by performing either of the following procedures.
   – Operate the “TUNE/TRACK/CH” dial.
   – Press the talk switch and say the voice tag.
3. Select the “CONFIRM” menu.
4. Press the preset button (from 1 to 6) to which you want to register the phone number.

NOTE

If the number to be used is already registered in speed dial, “OVERWRITE?” will be displayed.

▽ Deleting the phonebook data

1. Select the “DELETE ENTRY” menu.
2. Select the phone number by performing either of the following procedures.
   – Operate the “TUNE/TRACK/CH” dial.
   – Press the talk switch and say the voice tag.
3. Select the “CONFIRM” menu.
   – Then “DELETED” is displayed and the selected phonebook data is deleted.

▽ Deleting the speed dial

1. Select “DEL SPD DIAL” by operating the “TUNE/TRACK/CH” dial or select “DELETE SPEED DIAL” by using the voice command system.
2. Press the preset button (from 1 to 6) to which you want to delete the speed dial.
3. Select the “CONFIRM” menu.
   – Then “DELETED” is displayed and the selected speed dial is deleted.

▽ Deleting the redial data

1. Select the “REDIAL” menu.
2. Select the phone number by operating the “TUNE/TRACK/CH” dial.
3. Select the “DELETE” menu.

4. Select the “CONFIRM” menu.
   – Then “DELETED” is displayed and the selected redial data is deleted.

▽ **Deleting the callback data**

1. Select the “CALLBACK” menu.
2. Select the phone number by operating the “TUNE/TRACK/CH” dial.
3. Select the “DELETE” menu.
4. Select the “CONFIRM” menu.
   – Then “DELETED” is displayed and the selected callback data is deleted.

▼ **Making a phone call**

▽ **Making a phone call by saying name**

1. Press the talk switch .
2. Say “DIAL BY NAME”.
3. Press the talk switch again.
4. Say the desired name (voice tag) to be called.
5. Select the “DIAL” menu or press the OFF hook switch .

▽ **Making a phone call by saying number**

1. Press the talk switch .
2. Say “DIAL BY NUMBER”.
3. Press the talk switch again.
4. Say the desired phone number to be called.
5. Select the “DIAL” menu or press the OFF hook switch .

▽ **Making a phone call from speed dial**

It is possible to select a phone number from speed dial registered with the in-vehicle equipment to make a phone call.

1. Press the preset button (from 1 to 6) to which the desired number is registered.
2. Press the OFF hook switch .

NOTE

When a preset button for which numbers are not registered is pressed, an error message is indicated on the audio screen.

▽ **Redial**

1. Select the “REDIAL” menu.
2. Select the desired number by operating the “TUNE/TRACK/CH” dial.
3. Select the “DIAL” menu or press the OFF hook switch .

▽ **Callback**

1. Select the “CALL BACK” menu.
2. Select the desired number by operating the “TUNE/TRACK/CH” dial.
3. Select the “DIAL” menu or press the OFF hook switch .

▽ **Making a phone call from list name**

It is possible to select a phone number from the list name registered with the in-vehicle equipment to make a phone call. For details, refer to “List names function” ☞5-43.

▽ **Top redial**

1. Press the OFF hook switch and load the outgoing call history.
2. Select the “DIAL” menu or press the OFF hook switch .

▼ **Taking a phone call and declining an incoming call**

To take a phone call: Press the OFF hook switch .

To put an incoming call on hold (only if the cell phone has this function): Press the ON hook switch briefly.

To decline an incoming call (only if the cell phone has this function): Press and

– CONTINUED –

hold the ON hook switch .

▼ Ending a call

Press the ON hook switch .

▼ Volume control

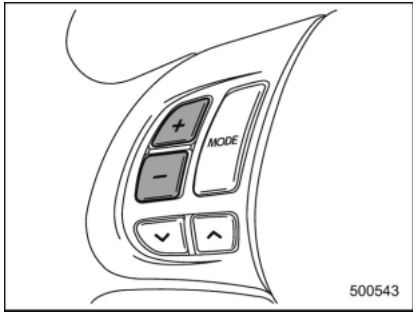

You can adjust the phone call volume, the voice volume and the voice guidance volume. Refer to “Volume control buttons” ☞5-32.

▽ Adjustable level of each volume

Volume	Range	Initial setting
Phone call	0 to 14	7
Voice	0 to 14	7
Voice guidance	0 to 6	3

■ Bluetooth® setting

▼ Security setting

After selecting the “SECURITY” menu, perform the following procedures.

▽ Setting PIN code

The PIN code is a 4-digit number and is used when locking the phonebook.

1. Select the “SET PIN” menu.
   – Then “CURRENT PIN?” is displayed.
2. Input the current PIN code by performing either of the following procedures.
   – Operate the “TUNE/TRACK/CH” dial.
   – Press the talk switch and say the number.
3. Select the “CONFIRM” menu.
4. Input the new PIN code by performing either of the following procedures.
   – Operate the “TUNE/TRACK/CH” dial.
   – Press the talk switch and say the number.
5. Select the “CONFIRM” menu.

▽ Locking the phonebook

1. Select “PHBK LOCK” by operating the “TUNE/TRACK/CH” dial or say “PHONEBOOK LOCK”.
   – Then “CURRENT PIN?” is displayed.
2. Input the PIN code by performing either of the following procedures.
   – Operate the “TUNE/TRACK/CH” dial.
   – Press the talk switch and say the number.
3. Select the “CONFIRM” menu.
   – If the inputted PIN code is correct, “LOCKED” is displayed and the phonebook is locked.

NOTE

While the phonebook is locked, if the operation restricted menu is selected, “PHBK LOCK” is displayed.

▽ Unlocking the phonebook

1. Perform either of the following procedures.
   – Select the “PHBK UNLOCK” menu by operating the “TUNE/TRACK/CH” dial.
   – Press the talk switch and say “PHONEBOOK UNLOCK”.

NOTE

If the phonebook is not locked, “UNLOCK” is displayed and the mode changes to the security mode.

2. After “CURRENT PIN?” is displayed, input the PIN code by performing either of the following procedures.
   – Operate the “TUNE/TRACK/CH” dial.
   – Press the talk switch and say the number.
3. Select the “CONFIRM” menu.
   – If the inputted PIN code is correct, “UNLOCKED” is displayed and the phonebook is unlocked.

▼ Phone setup

After selecting the “PHONE SETUP” menu, perform the following procedures.

▽ Setting pair phone

Refer to “Preparation for using the Hands-free system” ☞5-38.

▽ Selecting phone

To select the registered cell phone for connecting to the in-vehicle equipment, perform the following procedure.

1. Select the “SELECT PHONE” menu.
   – If no cell phones are registered, “EMPTY” is displayed and the mode changes to the “PHONE SETUP” mode.
2. Select the cell phone by performing either of the following procedures.
   – Operate the “TUNE/TRACK/CH” dial.
   – Press the talk switch and say the voice tag.
3. Select the “CONFIRM” menu.
   – “SELECTED” is displayed, the selected cell phone is connected to the in-vehicle equipment and the mode changes to the “PHONE SETUP” mode.

▽ Changing the voice tag of the cell phone

1. Select the “CHANGE NAME” menu.
   – If no cell phones are registered, “EMPTY” is displayed and the mode changes to the “PHONE SETUP” mode.
2. Select the cell phone by performing either of the following procedures.
   – Operate the “TUNE/TRACK/CH” dial.
   – Press the talk switch and say the voice tag.
3. Select the “RECORD NAME” menu.
4. Register the voice tag. For details, refer to “Preparation for using the Hands-free system” ☞5-38.

▽ List phones function

The cell phone voice tags saved in the cell phone list are spoken by using the list phones function.

1. Select the “LIST PHONES” menu.
   – If no cell phones are registered, “EMPTY” is displayed and the mode changes to the “PHONE SETUP” mode.
2. Registered cell phones are displayed in the saved order. While displayed, if the “TUNE/TRACK/CH” dial is turned, the next registered cell phone is displayed. Press the ON hook button to close the Hands-free menu.
3. Select the cell phone by performing either of the following procedures.
   – Operate the “TUNE/TRACK/CH” dial.
   – Press the talk switch .
4. After “SELECTED” is displayed, you can select the following menus.

- “SELECT PHONE” to connect the selected cell phone
- “CHANGE NAME” to change the voice tag
- “DELETE” to delete the selected cell phone from the list
- “GO BACK” to go back to the “PHONE SETUP” mode

– CONTINUED –

▽ **Setting passkey**

1. Select the “SET PASSKEY” menu.
   – After the currently set passkey is displayed, a new passkey can be entered.
2. Input the new passkey by performing either of the following procedures.
   – Operate the “TUNE/TRACK/CH” dial.
   – Press the talk switch and say the passkey.
3. Select the “CONFIRM” menu.
   – The new passkey is displayed, the passkey is changed and the mode changes to the “PHONE SETUP” mode.

▽ **Deleting registered cell phone from the list**

1. Select the “DELETE” menu.
2. Select a cell phone to be deleted by performing either of the following procedures.
   – Operate the “TUNE/TRACK/CH” dial.
   – Press the talk switch and say the voice tag.
3. Select the “CONFIRM” menu.
   – “DELETED” is displayed, the data is deleted and the mode changes to the “PHONE SETUP” mode.

▼ **System setup**

After selecting the “SYSTEM SETUP” menu, perform the following procedure. Select the following menus by operating the “TUNE/TRACK/CH” dial.

▽ **Setting guidance volume**

To set the guidance volume, perform the following procedure.

1. Select the “GUIDANCE VOL” menu.
2. Set the guidance volume by operating the “TUNE/TRACK/CH” dial.

▽ **Initializing the registered data**

To initialize the registered data, perform the following procedure.

1. Select the “INITIALIZE” menu.
2. Select the “CONFIRM” menu.
   – First “PLEASE WAIT”, then “INITIALIZED” is displayed. The registered data is initialized and the mode changes to the last mode.

▽ **Selecting language**

To select the language, perform the following procedure.

1. Select the “SEL LANGUAGE” menu.
2. Select the desired language by operating the “TUNE/TRACK/CH” dial.

Interior lights 6-2
Dome light 6-2
Cargo area light (5-door models) 6-2
Map lights 6-3
Sun visors 6-4
Vanity mirror 6-4
Storage compartment 6-4
Glove box 6-5
Center console 6-5
Cup holders 6-5
Front passenger's cup holder 6-5
Rear passenger's cup holder (if equipped) 6-7
Bottle holders 6-7
Accessory power outlets 6-8
Use with a cigarette lighter (if equipped) 6-9
Ashtray (if equipped) 6-10
Floor mat 6-10
Shopping bag hook (5-door) 6-11
Cargo area cover (5-door) 6-12
Using the cover 6-12
To remove the cover 6-12
To install the cover housing 6-13
Cargo tie-down hooks (5-door) 6-13
Under-floor storage compartment (if equipped) 6-14

Interior lights

When leaving your vehicle, make sure the lights are turned off to avoid battery discharge.

■ Dome light

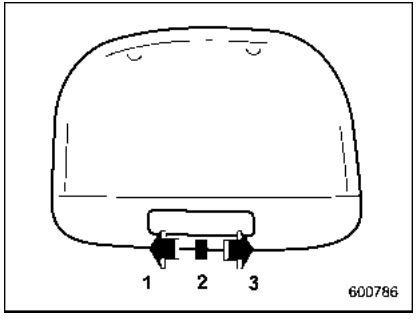

1) ON
2) DOOR
3) OFF

The dome light switch has the following three positions.

ON: The light remains on continuously.

OFF: The light remains off.

DOOR: The dome light illuminates automatically in the following cases.

- Any of the doors or the rear gate (5-door) is opened.
- The doors or the rear gate (5-door) are unlocked using the remote keyless entry transmitter.
- The ignition switch is turned from the “Acc” position to the “LOCK” position.

The automatically illuminated dome light remains on for several seconds and then gradually turns off after all doors and the rear gate (5-door) are closed.

While the light is illuminated, if any of the following operations are performed, the dome light turns off immediately.

- The ignition switch is turned from the “LOCK” position to “Acc” or “ON” position.
- All doors and the rear gate (5-door) are locked using the remote keyless entry transmitter.

The setting of the period for which the light remains on (OFF delay timer) can be changed by a SUBARU dealer. Consult your SUBARU dealer for details.

■ Cargo area light (5-door models)

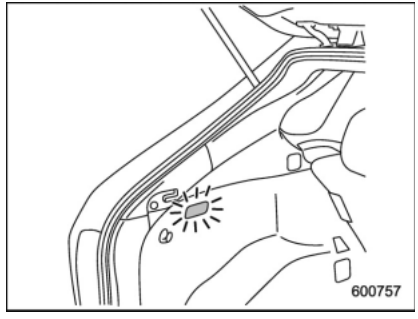

ON position: The light illuminates when the rear gate is opened. The light remains illuminated for several seconds and gradually turns off after the rear gate is closed.

OFF position: The light remains off.

■ Map lights

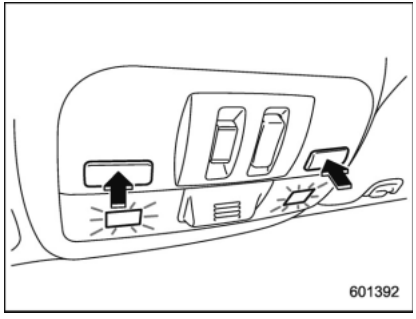

Type A

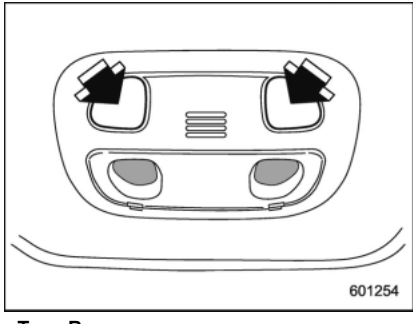

Type B

To turn on the map light, push the switch. To turn it off, push the switch again.

When leaving the vehicle, make sure the lights are turned off to avoid battery discharge.

NOTE

For the type A map lights, although the light switches are in the ON position, the lights are automatically turned off after approximately 30 seconds of illumination to prevent the vehicle battery from discharging. For details, refer to "Battery drainage prevention function" ☞2-5.

▼ Automatic illumination (models with moonroof)

The map lights illuminate automatically in the following cases.

- Any of the doors other than the rear gate is opened. (The map lights do not illuminate when only the rear gate is opened.)
- The doors are unlocked using the remote keyless entry transmitter.
- The ignition switch is turned from the "Acc" position to the "LOCK" position.

The automatically illuminated map lights remain on for several seconds and then gradually turn off after all doors are closed.

While the lights are on, if any of the following operations are performed, the map lights turn off immediately.

- The ignition switch is turned from the "LOCK" position to the "Acc" or "ON" position.
- All doors and the rear gate (5-door) are locked using the remote keyless entry transmitter.

The setting of the period for which the lights remain on (OFF delay timer) can be changed by a SUBARU dealer. Consult your SUBARU dealer for details.

Sun visors

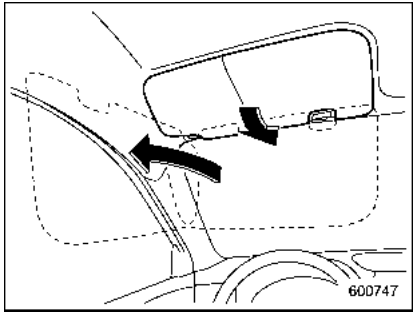

To block out glare, swing down the visors. To use the sun visor at a side window, swing it down and move it sideways.

■ Vanity mirror

⚠ CAUTION

Keep the vanity mirror cover closed while the car is being driven to avoid being temporarily blinded by the glare of bright light.

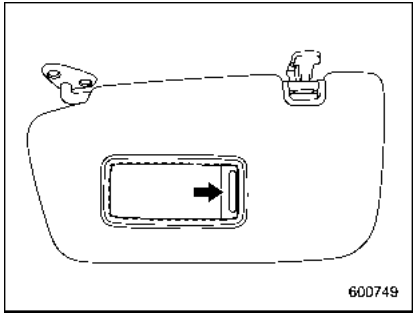

To use the vanity mirror, swing down the sun visor and open the vanity mirror cover.

Storage compartment

⚠ CAUTION

- **Always keep the storage compartment closed while driving to reduce the risk of injury in the event of a sudden stop or an accident.**
- **Do not store spray cans, containers with flammable or corrosive liquids or any other dangerous items in the storage compartment.**

■ Glove box

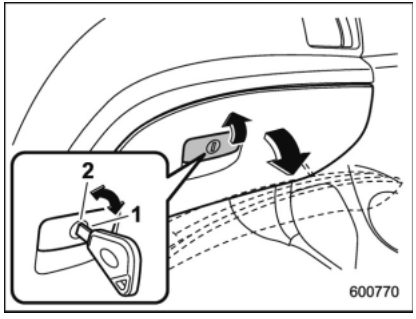

1) Lock
2) Unlock

To open the glove box, pull the handle. To close it, push the lid firmly upward.

To lock the glove box, insert the key and turn it clockwise. To unlock the glove box, insert the key and turn it counterclockwise.

■ Center console

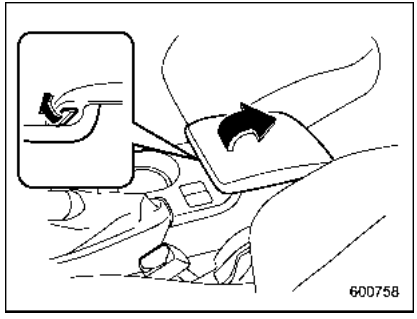

To open the lid, pull up the lock release.

Cup holders

⚠ CAUTION

Take care to avoid spills. Beverages, if hot, might burn you or your passengers. Spilled beverages may also damage upholstery, carpets or audio equipment.

■ Front passenger's cup holder

⚠ CAUTION

Do not pick up a cup from the cup holder or put a cup in the holder while you are driving, as this may distract you and lead to an accident.

– CONTINUED –

▼ **Except STI**

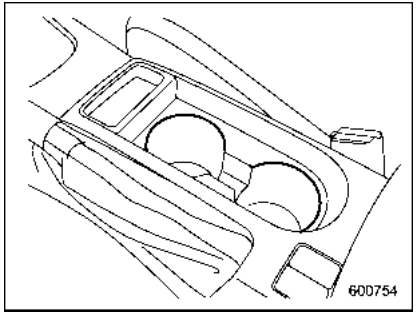

A dual cup holder is built into the center console, beside the parking brake lever.

▼ **STI**

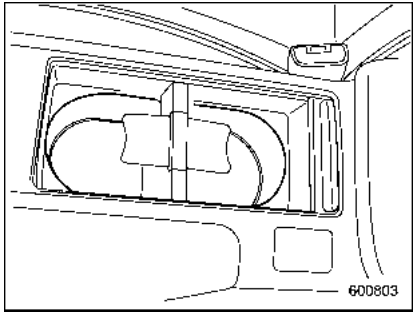

The dual cup holder is built into the center console near the parking brake lever.

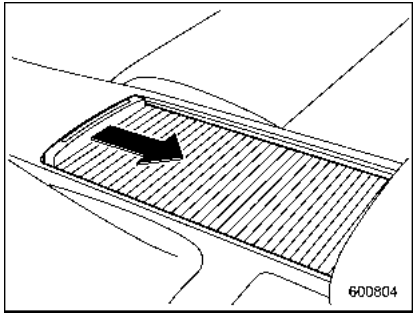

To access the cup holder, pull the lid toward the rear.

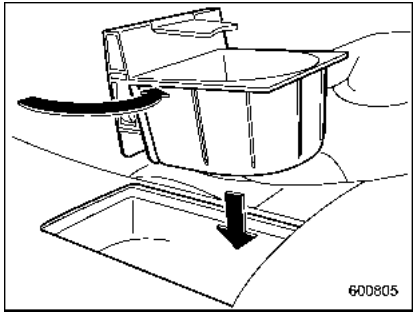

The divider in the cup holder can be pulled out and inserted in a different position (further toward the front or rear) to enable cups of different sizes to be held.

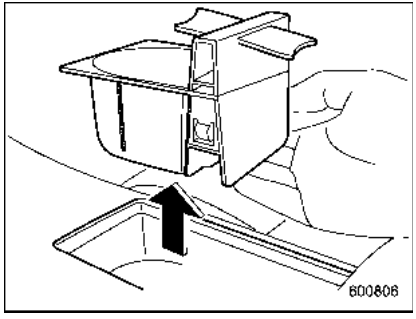

NOTE

With the divider taken out, the cup holder can be used as a storage box.

■ Rear passenger's cup holder (if equipped)

⚠ CAUTION

When not in use, always keep the cup holder stored while driving to reduce the risk of injury in the event of a sudden stop or an accident.

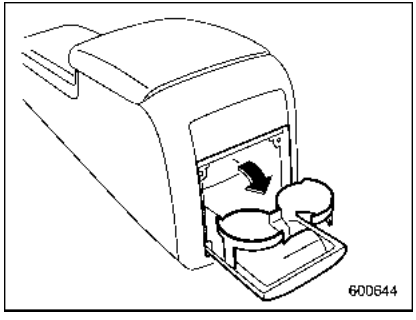

A dual cup holder is located at the back of the center console. To use the cup holder, open the lid by pulling its upper edge.

Bottle holders

⚠ CAUTION

- **Do not pick up a bottle from the bottle holder or put a bottle in the holder while you are driving, as this may distract you and lead to an accident.**
- **When placing a beverage in a bottle holder, make sure it is capped. Otherwise, the beverage could spill when opening/closing the door or while driving and, if the beverage is hot, it could burn you and/or your passengers.**

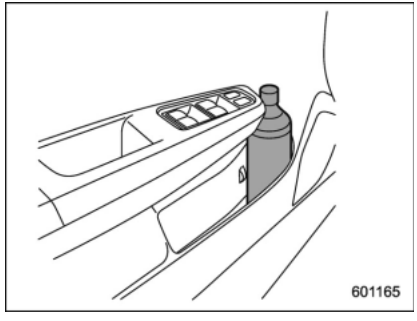

The bottle holder equipped on each door trim can be used to hold beverage bottles and other items.

Accessory power outlets

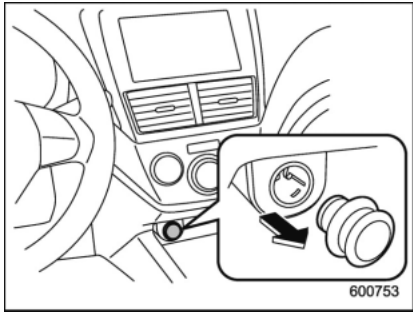

Power outlet below the climate control dials

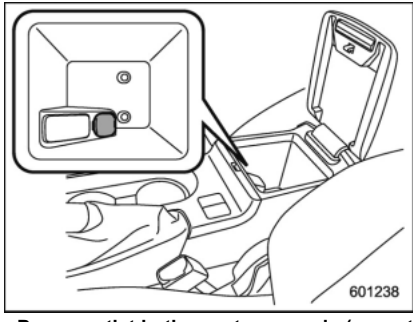

Power outlet in the center console (except STI)

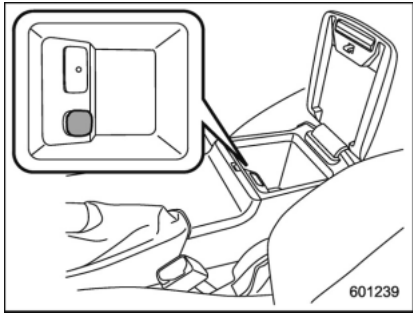

Power outlet in the center console (STI)

Accessory power outlets are provided below the climate control dials and in the center console. Electrical power (12V DC) from the battery is available at any of the outlets when the ignition switch is in either the “Acc” or “ON” position.

You can use an in-vehicle electrical appliance by connecting it to an outlet.

The maximum power rating of an appliance that can be connected is **120W**. Do not use an appliance which exceeds the indicated wattage for each outlet.

When using appliances connected to two outlets simultaneously, the total power consumed by them must not exceed 120W.

⚠ CAUTION

- **Do not attempt to use a cigarette lighter in the accessory power outlets.**
- **Do not place any foreign objects, especially metal ones such as coins or aluminum foil, into the accessory power outlet. That could cause a short circuit. Always put the cap on the accessory power outlet when it is not in use.**
- **Use only electrical appliances which are designed for 12V DC.**

  The maximum power rating of an appliance that can be connected is 120W. Do not use an appliance which exceeds the indicated wattage for each outlet.

  When using appliances connected to two outlets simultaneously, the total power consumed by them must not exceed 120W. Overloading the accessory power outlet can cause a short circuit. Do not use double adapters or more than one electrical appliance.
- **If the plug on your electric appliance is either too loose or too**

tight for the accessory power outlet, this can result in a poor contact or cause the plug to get stuck. Only use plugs that fit properly.

- **Use of an electric appliance in the accessory power outlet for a long period of time while the engine is not running can cause battery discharge.**
- **Before driving your vehicle, make sure that the plug and the cord on your electrical appliance will not interfere with your shifting gears and operating the accelerator and brake pedals. If they do, do not use the electrical appliance while driving.**

■ Use with a cigarette lighter (if equipped)

To use the accessory power outlet below the climate control as a cigarette lighter socket, purchase the cigarette lighter plug, which is an optional accessory. A cigarette lighter plug is available from your SUBARU dealer.

The cigarette lighter operates only when the ignition switch is in the “ON” or “Acc” position.

To use the cigarette lighter, push in the knob and wait a few moments. It will automatically spring up when ready for use.

⚠ WARNING

To avoid being burned, never grasp the lighter by the end with the heating element. Doing so could result in injury and could also damage the heating element.

⚠ CAUTION

- **Do not hold the lighter pushed in, because it will overheat.**
- **The electrical power socket located in the center console is originally designed to use a genuine SUBARU cigarette lighter plug. Do not use a non-genuine cigarette lighter plug in the socket. Doing so may cause a short-circuit and overheating, resulting in a fire.**
- **If the socket is ever used for a plug-in accessory such as a cell phone, that may damage the portion of the socket’s internal mechanism that causes a cigarette lighter plug to “pop out” after its lighter element is heated. Therefore, do not place a cigarette lighter plug in a socket that has been used, even once, to power a plug-in accessory. Doing so may cause the plug to stick and overheat, creating a potential fire hazard.**

Ashtray (if equipped)

⚠ CAUTION

- **Do not use ashtrays as waste receptacles or leave a lighted cigarette in an ashtray. This could cause a fire.**
- **Always extinguish matches and cigarettes before putting them into the ashtray, and then close the ashtray securely. If you keep the ashtray open, the fire of the cigarette may spread to another cigarette butt and start a fire.**
- **Do not put flammable material in the ashtray.**
- **Do not leave a lot of cigarette butts in the ashtray.**

NOTE

Particles of ash and tobacco will accumulate around the hinges of the ashtray's inner lid. Clean them off using a toothbrush or a similar narrow-ended implement.

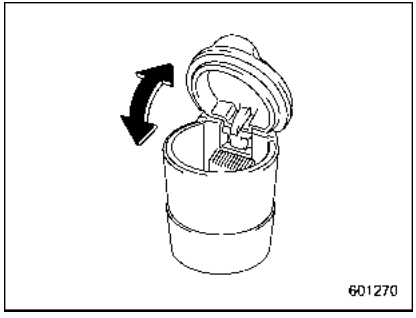

The portable ashtray can be installed in each cup holder. For the locations of the cup holders, refer to "Cup holders" ☞6-5. When using the ashtray, open the lid of the ashtray. When removing the ashtray from a cup holder, pull the ashtray upwards.

Fully close the lid after using the ashtray to help reduce residual smoke.

Floor mat

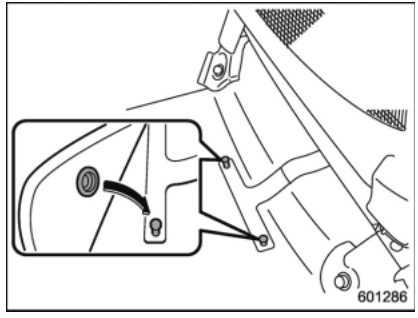

Retaining pins are located on the driver's side floor.

The floor mat should be properly secured using the built-in grommets, by placing the grommets over the pins and pushing them downward.

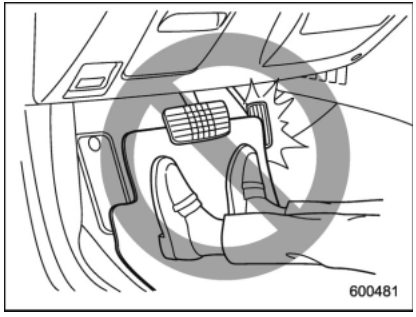

⚠ CAUTION

If the floor mat slips forward and interferes with the movement of the pedals during driving, it could cause an accident. Observe the following precautions to prevent the floor mat from slipping forward.

- **Be sure to use a genuine SUBARU floor mat designed with grommets in the correct locations.**
- **Make sure that the driver's floor mat is placed back in its proper location and is correctly secured on its retaining pins.**
- **Do not use more than one floor mat.**

Shopping bag hook (5-door)

⚠ CAUTION

Do not hang items on the shopping bag hook that weigh 6 lbs (3 kg) or more.

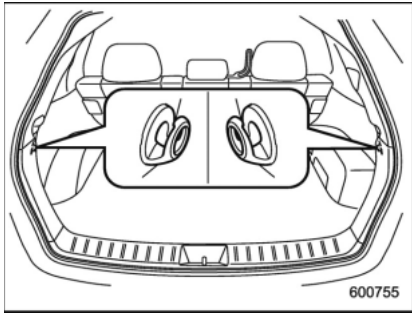

A shopping bag hook is attached to each side of the cargo area.

Cargo area cover (5-door)

The cargo area cover is provided for covering the cargo area and to protect its contents from direct sunlight. This cover is detachable to make room for additional cargo.

■ Using the cover

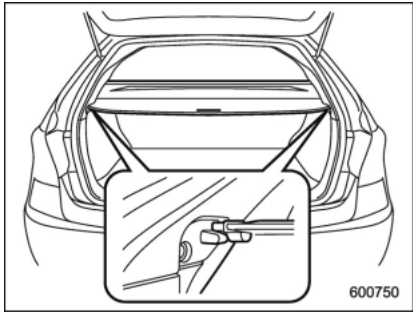

To extend the cover, pull the end of the cover out of the housing, then insert its hooks into the catches as shown. To rewind it, unhook it from the catches and it will rewind automatically. You should hold on to the cover and guide it back into the cover housing while it is rewinding.

⚠ WARNING

Do not place anything on the extended cover. Putting excessive weight on the extended cover can break it and an object on the cover could tumble forward in the event of a sudden stop or collision. This could cause serious injury.

⚠ CAUTION

Be careful not to scratch the rear gate stays while extending and rewinding the cover.

Scratches on the stays could cause leakage of gas from the stays, which may result in their inability to hold the rear gate open.

■ To remove the cover

1. Rewind the cover.

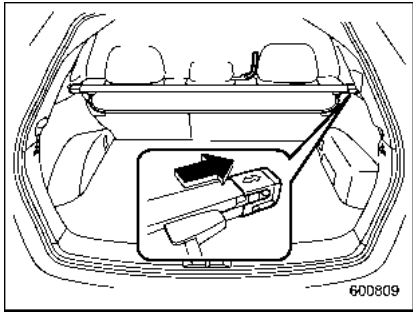

2. Push the bar to the right side and shorten the bar.
3. Take it off the retainer.

■ To install the cover housing

1. Shorten the bar.

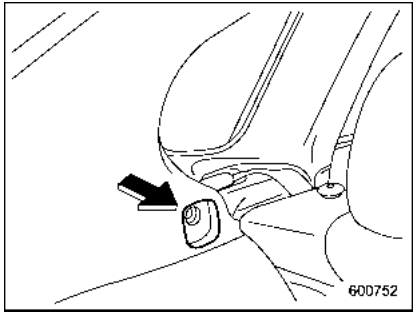

2. Insert the projections located on the both ends of the sleeve into the recesses of the retainers.

Cargo tie-down hooks (5-door)

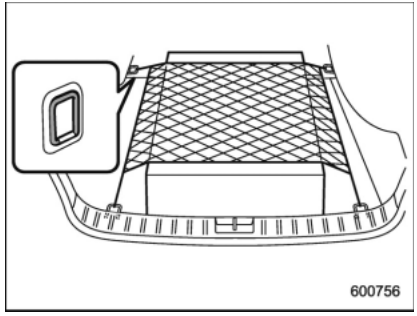

The cargo area is equipped with four tie-down hooks so that cargo can be secured with a cargo net or ropes.

When using the tie-down hooks, turn them down out of the storing recesses. When not in use, put the hooks up into the storing recesses.

⚠ CAUTION

The cargo tie-down hooks are designed only for securing light cargo. Never try to secure cargo that exceeds the capacity of the hooks. The maximum load capacity is 44 lbs (20 kg) per hook.

Under-floor storage compartment (if equipped)

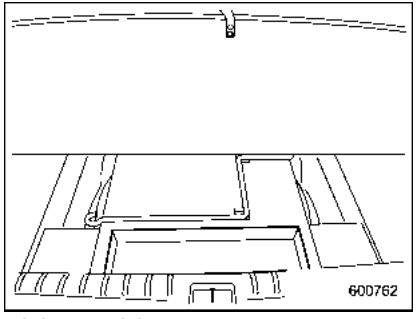

4-door models

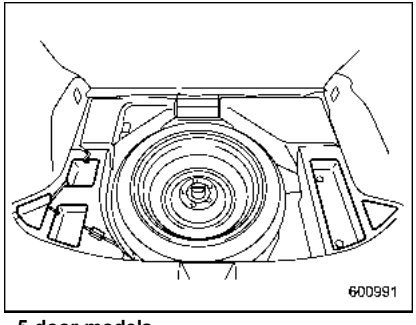

5-door models

The storage compartment is located under the floor of the trunk (4-door) or the cargo area (5-door), and it can be used to store small items. To open the lid, pull the tab up.

NOTE

• The shape of the storage compartment may be different depending on the model.
• When storing a flat tire, put the storage tray in the trunk (4-door) or the cargo area (5-door).

⚠ CAUTION

- **Always keep the lids closed while driving to reduce the risk of injury in the event of a sudden stop or an accident.**
- **Do not store spray cans, containers with flammable or corrosive liquids or any other dangerous items in the storage compartment.**

Fuel 7-3
Fuel requirements 7-3
Fuel filler lid and cap 7-4
State emission testing (U.S. only) 7-7
Preparing to drive 7-8
Starting the engine 7-9
Stopping the engine 7-10
Remote engine start system (dealer option) 7-10
Starting your vehicle 7-10
Remote start safety features 7-11
Entering the vehicle while it is running via remote start 7-11
Entering the vehicle following remote engine start shutdown 7-11
Pre-heating or pre-cooling the interior of the vehicle 7-11
Service mode 7-11
Remote engine start transmitter programming and programmable feature option 7-12
System maintenance 7-12
Manual transmission – 6 speeds (STI) 7-14
Selecting reverse gear 7-15
Shifting speeds 7-15
Driving tips 7-16
Manual transmission – 5 speeds (except STI) 7-16
Shifting speeds 7-17
Driving tips 7-17
Driver's Control Center Differential (DCCD) (STI) 7-18
To change mode of driver's control center differential 7-18
Auto mode 7-19
Manual mode 7-20
Temporary release 7-21
SI-DRIVE (STI) 7-22
Intelligent (I) mode 7-22
Sport (S) mode 7-22
Sport Sharp (S#) mode 7-23
SI-DRIVE selector 7-23
Limited slip differential (LSD) (STI) 7-24
Power steering 7-24
Braking 7-24
Braking tips 7-24
Brake system 7-25
Disc brake pad wear warning indicators 7-25
ABS (Anti-lock Brake System) 7-26
ABS system self-check 7-26
ABS warning light 7-26
Electronic Brake Force Distribution (EBD) system 7-27
Steps to take if EBD system malfunctions 7-27
Vehicle Dynamics Control system 7-28
Vehicle Dynamics Control system monitor 7-29
Vehicle Dynamics Control OFF switch (STI) 7-30
Vehicle Dynamics Control OFF switch (except STI) 7-31

Tire pressure monitoring system (TPMS) (U.S.-spec. models) **7-32**
Parking your vehicle **7-33**
Parking brake 7-33
Parking tips 7-34
Hill start assist system **7-35**
To activate/deactivate the Hill start assist system (STI) 7-36
Hill start assist warning light/Hill start assist OFF indicator light 7-37
Cruise control **7-37**
To set cruise control 7-38
To temporarily cancel the cruise control 7-39
To turn off the cruise control 7-39
To change the cruising speed 7-39
Cruise control indicator light 7-40
Cruise control set indicator light 7-40

Fuel

⚠ CAUTION

Use of a fuel which is low in quality or use of an inappropriate fuel additive may cause engine damage.

■ Fuel requirements

▼ Except STI

The engine is designed to operate using premium **unleaded gasoline** with an octane rating of **91 AKI (95 RON) or higher**. If premium unleaded gasoline is not available, regular unleaded gasoline with an octane rating of 87 AKI (90 RON) or higher may be temporarily used. For optimum engine performance and driveability, it is required that you use premium grade unleaded gasoline.

NOTE

Be sure to use premium unleaded gasoline of 91 AKI (95 RON) or higher. If other gasoline (lower than 91 AKI (95 RON)) is used, knocking, reduced output and poor accelerator response will result.

▼ STI

The engine is designed to operate at maximum performance using **unleaded gasoline** with an octane rating of **93 AKI (98 RON) or higher**. If 93 AKI (98 RON) fuel is not readily available in your area, unleaded gasoline with an octane rating of 91 AKI (95 RON) may be used with no detriment to engine durability or driveability. However, you may notice a slight decrease in maximum engine performance while using 91 AKI (95 RON) fuel. Use of 91 AKI (95 RON) fuel will not affect your warranty coverage.

▼ Fuel octane rating

This octane rating is the average of the Research Octane and Motor Octane numbers and is commonly referred to as the Anti Knock Index (AKI).

Using a gasoline with a lower octane rating can cause persistent and heavy knocking, which can damage the engine. Do not be concerned if your vehicle sometimes knocks lightly when you drive up a hill or when you accelerate. Contact your SUBARU dealer if you use a fuel with the specified octane rating and your vehicle knocks heavily or persistently.

▼ Unleaded gasoline

The neck of the fuel filler pipe is designed to accept only an unleaded gasoline filler nozzle. Under no circumstances should leaded gasoline be used because it will damage the emission control system and may impair driveability and fuel economy.

▼ Gasoline for California-certified LEV

If your vehicle was certified to California's low emission vehicle (LEV) standards as indicated on the underhood tune-up label, it is designed to optimize engine and emission performance with gasoline that meets the clean burning low-sulfur California gasoline specifications. If you live in any other state than California, your vehicle will operate on gasoline meeting Federal specifications. Gasoline sold outside California is permitted to have higher sulfur levels, which may affect the performance of your vehicle's catalytic converter and may produce a sulfur exhaust odor or smell. SUBARU recommends that you try a different brand of unleaded gasoline having lower sulfur to determine if the problem is fuel related before returning your vehicle to an authorized dealer for service.

▼ MMT

Some gasoline contains an octane-enhancing additive called MMT (Methylcyclopentadienyl Manganese Tricarbonyl). If you use such fuels, your emission control

– CONTINUED –

system performance may deteriorate and the CHECK ENGINE warning light/Malfunction indicator light may turn on. If this happens, return to your authorized SUBARU Dealer for service. If it is determined that the condition is caused by the type of fuel used, repairs may not be covered by your warranty.

▼ Gasoline for cleaner air

Your use of gasoline with detergent additives will help prevent deposits from forming in your engine and fuel system. This helps keep your engine in tune and your emission control system working properly, and is a way of doing your part for cleaner air. If you continuously use a high quality fuel with the proper detergent and other additives, you should never need to add any fuel system cleaning agents to your fuel tank.

Many gasolines are now blended with materials called oxygenates. Use of these fuels can also help keep the air cleaner. Oxygenated blend fuels, such as MTBE (Methyl Tertiary Butyl ether) or ethanol (ethyl or grain alcohol) may be used in your vehicle, but should contain no more than 15% MTBE or 10% ethanol for the proper operation of your SUBARU.

Do not use any gasoline that contains more than 10% ethanol, including from any pump labeled E15, E30, E50 or E85 (which are only some examples of fuel containing more than 10% ethanol).

In addition, some gasoline suppliers are now producing reformulated gasolines, which are designed to reduce vehicle emissions. SUBARU approves the use of reformulated gasoline.

If you are not sure what the fuel contains, you should ask your service station operators if their gasolines contain detergents and oxygenates and if they have been reformulated to reduce vehicle emissions.

As additional guidance, only use fuels suited for your vehicle as explained in the following description.

- Fuel should be unleaded and have an octane rating no lower than that specified in this manual.
- Methanol (methyl or wood alcohol) is sometimes mixed with unleaded gasoline. Methanol can be used in your vehicle **ONLY** if it does not exceed 5% of the fuel mixture **AND** if it is accompanied by sufficient quantities of the proper cosolvents and corrosion inhibitors required to prevent damage to the fuel system. Do not use fuel containing methanol **EXCEPT** under these conditions.
- If undesirable driveability problems are experienced and you suspect they may be fuel related, try a different brand of gasoline before seeking service at your SUBARU dealer.
- Fuel system damage or driveability problems which result from the use of improper fuel are not covered under the SUBARU Limited Warranty.

⚠ CAUTION

Do not let fuel spill on the exterior surfaces of the vehicle. Because fuel may damage the paint, be sure to wipe off any spilled fuel quickly. Paint damage caused by spilled fuel is not covered under the SUBARU Limited Warranty.

■ Fuel filler lid and cap

▼ Refueling

Only one person should be involved in refueling. Do not allow others to approach the area of the vehicle near the fuel filler pipe while refueling is in progress.

Be sure to observe any other precautions that are posted at the service station.

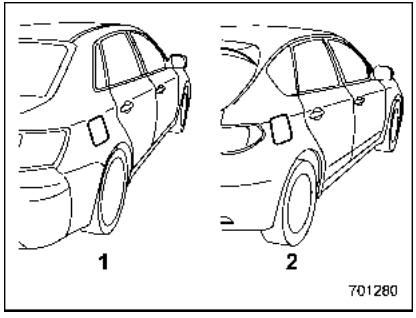

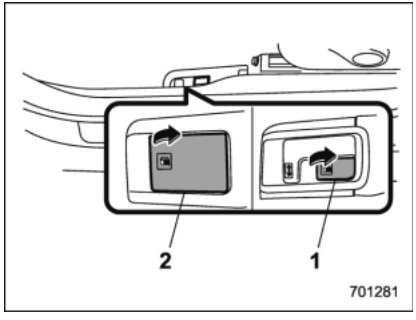

1) 4-door
2) 5-door

1. To open the fuel filler lid, pull the lid release lever up. The lever is on the floor at the left of the driver's seat.

⚠ WARNING

Before opening the fuel filler cap, first touch the vehicle body or a metal portion of the fuel pump or similar object to discharge any static electricity that may be present on your body. If your body is carrying an electrostatic charge, there is a possibility that an electric spark could ignite the fuel, which could burn you. To avoid acquiring a new static electric charge, do not get back into the vehicle while refueling is in progress.

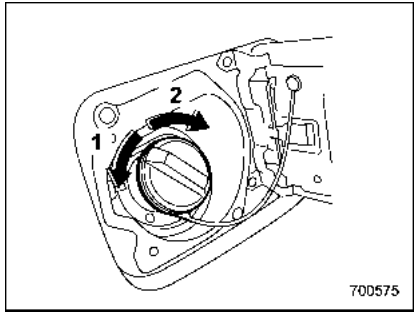

1) Open
2) Close

2. Remove the fuel filler cap by turning it slowly counterclockwise.

⚠ WARNING

- **Gasoline vapor is highly flammable. Before refueling, always first stop the engine and close all vehicle doors and windows. Make sure that there are no lighted cigarettes, open flames or electrical sparks in the adjacent area. Only handle fuel outdoors. Quickly wipe up any spilled fuel.**
- **When opening the cap, grasp it firmly and turn it slowly to the left. Do not remove the cap quickly. Fuel may be under pressure and spray out of the fuel filler neck, especially in hot weather. If you hear a hissing sound while you are removing the cap, wait for the sound to stop and then slowly open the cap to prevent fuel from spraying out and creating a fire hazard.**

– CONTINUED –

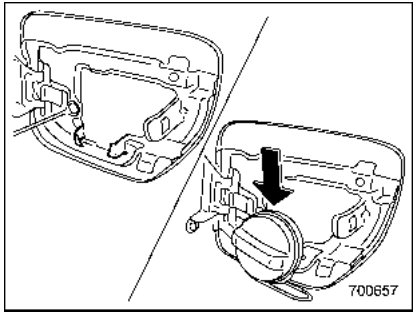

3. Set the fuel filler cap on the cap holder inside the fuel filler lid.

⚠ WARNING

- **When refueling, insert the fuel nozzle securely into the fuel filler pipe. If the nozzle is lifted or not fully inserted, its automatic stopping mechanism may not function, causing fuel to overflow the tank and creating a fire hazard.**
- **Stop refueling when the automatic stop mechanism on the fuel nozzle activates. If you continue to add fuel, temperature changes or other conditions may cause fuel to overflow from the tank and create a fire hazard.**

4. Stop filling the tank after the fuel filler pump automatically stops. Do not add any more fuel.
5. Put the cap back on, turn it clockwise until you hear a clicking noise. Be certain not to catch the tether under the cap while tightening.
6. Close the fuel filler lid completely.

If you spill any fuel on the painted surface, rinse it off immediately. Otherwise, the painted surface could be damaged.

NOTE

- **You will see the "⛽▶" sign in the fuel gauge. This indicates that the fuel filler door (lid) is located on the right side of the vehicle.**
- **If the fuel filler cap is not tightened until it clicks or if the tether is caught under the cap, the CHECK ENGINE warning light/malfunction indicator light may illuminate. Refer to "CHECK ENGINE warning light/Malfunction indicator light" ☞3-15.**

⚠ CAUTION

- **Never add any cleaning agents to the fuel tank. The addition of a cleaning agent may cause damage to the fuel system.**
- **After refueling, turn the cap to the right until it clicks to ensure that it is fully tightened. If the cap is not securely tightened, fuel may leak out while the vehicle is being driven or fuel spillage could occur in the event of an accident, creating a fire hazard.**
- **Do not let fuel spill on the exterior surfaces of the vehicle. Because fuel may damage the paint, be sure to wipe off any spilled fuel quickly. Paint damage caused by spilled fuel is not covered under the SUBARU Limited Warranty.**
- **Always use a genuine SUBARU fuel filler cap. If you use the wrong cap, it may not fit or have proper venting and your fuel tank and emission control system may be damaged. It could also lead to fuel spillage and a fire.**
- **Immediately put fuel in the tank**

whenever the low fuel warning light illuminates. Engine misfires as a result of an empty tank could cause damage to the engine.

State emission testing (U.S. only)

⚠ WARNING

Testing of an All-Wheel Drive model must NEVER be performed on a single two-wheel dynamometer. Attempting to do so will result in uncontrolled vehicle movement and may cause an accident or injuries to persons nearby.

⚠ CAUTION

- **At state inspection time, remember to tell your inspection or service station in advance not to place your SUBARU AWD vehicle on a two-wheel dynamometer. Otherwise, serious transmission damage will result.**
- **Resultant vehicle damage due to improper testing is not covered under the SUBARU Limited Warranty and is the responsibility of the state inspection program or its contractors or licensees.**

California and a number of federal states have Inspection/Maintenance programs to inspect your vehicle's emission control system. If your vehicle does not pass this test, some states may deny renewal of your vehicle's registration.

Your vehicle is equipped with a computer that monitors the performance of the engine's emission control system. Certified emission inspectors will inspect the On-Board Diagnostic (OBDII) system as part of the state emission inspection process. The OBDII system is designed to detect engine and transmission problems that might cause the vehicle emissions to exceed allowable limits. OBDII inspections apply to all 1996 model year and newer passenger cars and trucks. Over 30 states plus the District of Columbia have implemented emission inspection of the OBDII system.

- The inspection of the OBDII system consists of a visual operational check of the "**CHECK ENGINE**" warning light/malfunction indicator light (MIL) and an examination of the OBDII system with an electronic scan tool.
- A vehicle passes the OBDII system inspection if proper operation of the "**CHECK ENGINE**" warning light is observed, there are no stored diagnostic trouble codes, and the OBDII readiness monitors are all complete.

– CONTINUED –

- A vehicle fails the OBDII inspection if the "**CHECK ENGINE**" warning light is not properly operating (light is illuminated or is not working due to a burned out bulb) or there is one or more diagnostic trouble codes stored in the vehicle's computer.
- A state emission inspection may reject (not pass or fail) a vehicle if the number of OBDII system readiness monitors "**NOT READY**" is greater than one. If the vehicle's battery has been recently replaced or disconnected, the OBDII system inspection may indicate that the vehicle is not ready for the emission test. Under this condition, the vehicle driver should be instructed to drive his/her vehicle for a few days to reset the readiness monitors and return for an emission re-inspection.
- Owners of rejected or failing vehicles should contact their SUBARU Dealer for service.

Some states still use dynamometers in their emission inspection program. A dynamometer is a treadmill or roller-like testing device that allows your vehicle's wheels to turn while the vehicle remains in one place. Prior to your vehicle being put on a dynamometer, tell your emission inspector not to place your SUBARU AWD vehicle on a two-wheel dynamometer. **Otherwise, serious transmission damage will result.**

The U.S. Environmental Protection Agency (EPA) and states using two-wheel dynamometers in their emission testing program have EXEMPTED SUBARU AWD vehicles from the portion of the testing program that involves a two-wheel dynamometer. There are some states that use four-wheel dynamometers in their testing program. When properly used, this equipment should not damage a SUBARU AWD vehicle.

Under no circumstances should the rear wheels be jacked off the ground, nor should the driveshaft be disconnected for state emission testing.

Preparing to drive

You should perform the following checks and adjustments every day before you start driving.

1. Check that all windows, mirrors, and lights are clean and unobstructed.
2. Check the appearance and condition of the tires. Also check tires for proper inflation.
3. Look under the vehicle for any sign of leaks.
4. Check that the hood, trunk (4-door) and rear gate (5-door) are fully closed.
5. Check the adjustment of the seat.
6. Check the adjustment of the inside and outside mirrors.
7. Fasten your seatbelt. Check that your passengers have fastened their seatbelts.
8. Check the operation of the warning and indicator lights when the ignition switch is turned to the "ON" position.
9. Check the gauges, indicator and warning lights after starting the engine.

NOTE

Engine oil, engine coolant, brake fluid, washer fluid and other fluid levels should be checked daily, weekly or at fuel stops.

Starting the engine

⚠ CAUTION

Do not operate the starter motor continuously for more than 10 seconds. If the engine fails to start after operating the starter for 5 to 10 seconds, wait for 10 seconds or more before trying again.

NOTE

It may be difficult to start the engine when the battery has been disconnected and reconnected (for maintenance or other purposes). This difficulty is caused by the electronically controlled throttle's self-diagnosis function. To overcome it, keep the ignition switch in the "ON" position for approximately 10 seconds before starting the engine.

1. Apply the parking brake.
2. Turn off unnecessary lights and accessories.
3. Depress the clutch pedal to the floor and shift the shift lever into neutral. Hold the clutch pedal to the floor while starting the engine.

The starter motor will only operate when the clutch pedal is depressed fully to the floor.

4. Turn the ignition switch to the "ON" position and check the operation of the warning and indicator lights. Refer to "Warning and indicator lights" ☞3-12.
5. Turn the ignition switch to the "START" position **without** depressing the accelerator pedal. Release the key immediately after the engine has started.

If the engine does not start, try the following.

(1) Turn the ignition switch to the "OFF" position and wait for at least 10 seconds. After checking that the parking brake is firmly set, turn the ignition switch to the "START" position while depressing the accelerator pedal slightly (approximately a quarter of the full stroke). Release the accelerator pedal as soon as the engine starts.

(2) If this fails to start the engine, turn the ignition switch back to the "OFF" position and wait for at least 10 seconds. Then fully depress the accelerator pedal and turn the ignition switch to the "START" position. If the engine starts, quickly release the accelerator pedal.

(3) If this fails to start the engine, turn the ignition switch again to the "OFF" position. After waiting for 10 seconds or longer, turn the ignition switch to the "START" position without depressing the accelerator pedal.

(4) If the engine still refuses to start, contact your nearest SUBARU dealer for assistance.

6. Confirm that all warning and indicator lights have turned off after the engine has started. The fuel injection system automatically lowers the idle speed as the engine warms up.

Stopping the engine

The ignition switch should be turned off only when the vehicle is stopped and the engine is idling.

⚠ WARNING

Do not stop the engine when the vehicle is moving. This will cause loss of power to the power steering and the brake booster, making steering and braking more difficult. It could also result in accidental activation of the "LOCK" position on the ignition switch, causing the steering wheel to lock.

Remote engine start system (dealer option)

⚠ WARNING

- **Do not start the engine using the remote start system in an enclosed environment (e.g., in a closed garage). Prolonged operation of a motor vehicle in an enclosed environment can cause a harmful build-up of Carbon Monoxide. Carbon Monoxide is harmful to your health. Exposure to high levels of Carbon Monoxide can cause headaches, dizziness or in extreme cases unconsciousness and/or death.**
- **Before performing any servicing of the vehicle, temporarily place the remote engine start system in service mode to prevent the system from unexpectedly starting the engine.**

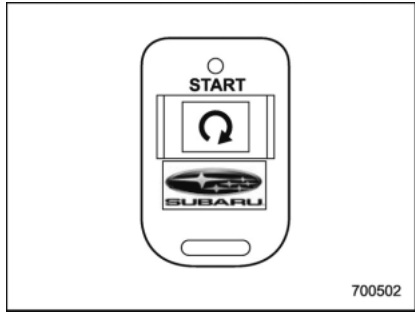

■ Starting your vehicle

The remote engine start system is activated by pressing the "⟳" button twice within 3 seconds on your remote engine start transmitter. The system will check certain pre-conditions before starting, and if all safety parameters are correct, the engine will start within 5 seconds. While the vehicle is operating via remote engine start, the vehicle's power window features will be disabled. Also, the system has a timer and will shut down after 15 minutes if you do not operate the vehicle. Press and hold the "⟳" button for 2 seconds again to turn the vehicle off. If the vehicle's starter cranks but does not start or starts and stalls, the remote engine start system will power off then attempt to start the vehicle

an additional four times. If the vehicle fails to start after the additional attempts, the remote engine start system will abort and return to a non-activated state.

■ Remote start safety features

For safety and security reasons, the system will fail to start and beep the horn twice or shut down the engine during remote start operation if any of the following conditions occur.

- The brake pedal is depressed before the vehicle ignition switch is turned “on”.
- The key was already in the ignition switch.
- The engine hood is opened.
- The vehicle’s engine idle speed has reached a level over 3,000 rpm.
- The alarm is triggered by opening a door or the rear gate.

NOTE

- The security indicator light on the combination meter will stop flashing while under remote engine start operation, but the vehicle is still protected.
- If the vehicle is entered during remote engine start operation, the system will not record entry in the alarm history.

■ Entering the vehicle while it is running via remote start

1. Unlock the vehicle doors using the remote keyless entry system. If the vehicle’s doors are unlocked manually using the key, the vehicle’s alarm system will trigger and the remote engine start system will turn off. Inserting the key into the ignition switch and turning it to the “ON” position or pressing the unlock button “” on the remote keyless entry transmitter will disarm the alarm system. Refer to “Alarm system” ☞2-15.
2. Enter the vehicle. Do not depress the brake pedal.
3. Insert the key into the ignition switch and turn to the “ON” position. If the ignition switch is accidentally turned to the “START” position, the system’s “starter anti-grind” feature will prevent the starter from re-cranking.
4. Depress the brake pedal. The remote starter disengages, the vehicle’s power window features are re-enabled and the vehicle will operate normally.

■ Entering the vehicle following remote engine start shutdown

An alarm trigger may occur if the vehicle is opened by the remote keyless entry transmitter within a few seconds immediately following remote engine start shutdown.

■ Pre-heating or pre-cooling the interior of the vehicle

Before exiting the vehicle, set the temperature controls to the desired setting and operation. After the system starts the vehicle, the heater or air-conditioning will activate and heat or cool the interior to your setting.

■ Service mode

In service mode, the remote start function is temporarily disabled to prevent the system from unexpectedly starting the engine while being serviced.

▼ To engage the service mode

Turn the ignition switch to the “ON” position, depress and hold the brake pedal, then press and release the “” button on the remote engine start transmitter three times. The system will pause for 1 second and then flash the turn signal lights and honk the horn three times indicating that the system is in service mode. When attempting to activate the remote start system while in service mode, the turn signal lights will flash and the horn will honk two times and will not

– CONTINUED –

start.

▼ **To disengage the service mode**

Turn the ignition switch to the “ON” position, depress and hold the brake pedal, then press and release the “” button on the remote engine start transmitter three times. The system will pause for 1 second and flash the turn signal lights once indicating that the system has exited service mode.

NOTE

When taking your vehicle in for service, it is recommended that you inform the service personnel that your vehicle is equipped with a remote engine start system.

■ Remote engine start transmitter programming and programmable feature option

New transmitters can be programmed to the remote engine start system in the event that remote engine start transmitters are lost, stolen or damaged. The remote engine start system also has one programmable feature that can be adjusted for user preference.

The remote engine start system can be programmed to either make an audible horn chirp upon remote start activation or not. Remote engine start transmitter programming and feature programming can be adjusted using the following procedure.

1. Open the driver’s door (the driver’s door must remain opened throughout the entire process).
2. Insert the key into the vehicle’s ignition switch and turn to the “ON” position.
3. Locate the small black programming button behind the fuse box cover, on the driver’s side left under the dashboard panel.
4. Press and hold the black programming button for 10 to 15 seconds. The horn will honk and the turn signal lights will flash three times to indicate that the system has entered programming mode. At this point you can proceed to either step 5 or step 6.
5. To program a remote engine start transmitter: press and release the “” button on each transmitter. The horn will honk and the turn signal lights will flash one time to indicate a successful transmitter learn each time the “” button is pressed. You can program up to eight transmitters.
6. To toggle the Horn Confirmation chirps ON/OFF: depress and release the brake pedal to toggle the feature. The horn will chirp and the turn signal lights will flash one time to indicate Confirmation Horn Chirps are “OFF”. The horn will honk and the turn signal lights will flash 2 times to indicate Confirmation Horn Chirps are “ON”. Depressing the brake pedal repeatedly will toggle the feature ON or OFF each time.
7. To exit the remote engine start transmitter and feature programming mode, turn the ignition switch to the “LOCK” position, remove the key from the ignition switch and test operation of the remote engine start transmitter(s) and horn confirmation feature.

■ System maintenance

▼ **Changing the batteries**

⚠ CAUTION

- **Do not let dust, oil or water get on or in the remote engine start transmitter when replacing the battery.**
- **Be careful not to damage the printed circuit board in the remote engine start transmitter when replacing the battery.**
- **Be careful not to allow children to touch the battery and any removed parts; children could swallow them.**
- **There is a danger of explosion if**

an incorrect replacement battery is used. Replace only with the same or equivalent type of battery.

- **Batteries should not be exposed to excessive heat such as sunshine, fire or the like.**

The two 3-volt lithium batteries (model **CR-1220**) supplied in your remote engine start transmitter should last approximately 3 years, depending on usage. When the batteries begin to weaken, you will notice a decrease in range (distance from the vehicle that your remote engine start system operates). Follow the instructions below to change the remote engine start transmitter batteries.

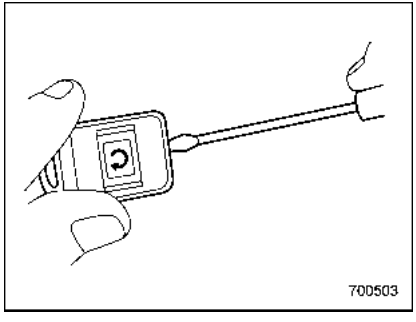

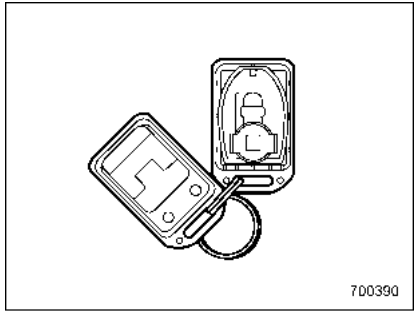

1. Carefully pry the remote engine start transmitter halves apart using a small flat-head screwdriver.

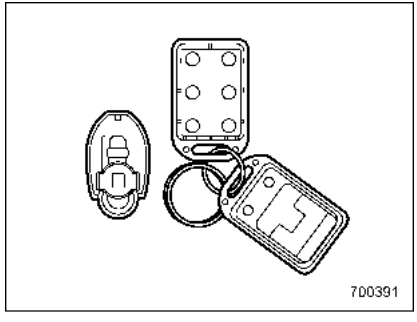

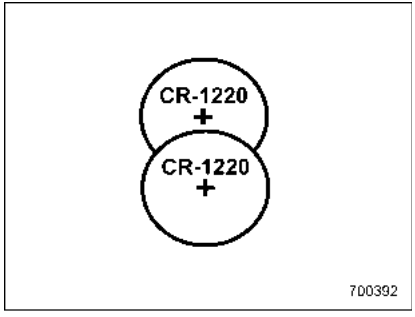

2. Remove the circuit board from the bottom half of the case and slide the white plastic battery holder out from under the battery tab releasing the batteries. Remove the old batteries and replace with new ones. Be sure to observe the (+) sign on the old batteries before removing them to ensure that the new batteries are inserted properly (battery "+" should be pointed away from the transmitter circuit board on both batteries).
3. Carefully snap the case halves back together, then test the remote engine start system.

– CONTINUED –

⚠ CAUTION

FCC WARNING

Changes or modifications not expressly approved by the party responsible for compliance could void the user's authority to operate the equipment.

NOTE

This device complies with Part 15 of the FCC Rules and RSS-Gen of IC Rules. Operation is subject to the following two conditions: (1) this device may not cause harmful interference, and (2) this device must accept any interference received, including interference that may cause undesired operation.

Manual transmission – 6 speeds (STI)

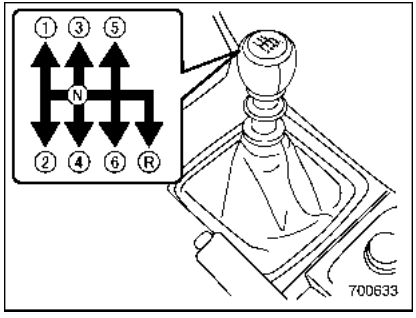

The manual transmission is a fully synchromeshed, 6-forward-speed and 1-reverse-speed transmission.

The shift pattern is shown on the shift lever knob.

⚠ WARNING

- **Do not drive the vehicle with the clutch disengaged (i.e., when the clutch pedal is depressed) or with the shift lever in the neutral position. Engine braking has no effect in either of these conditions and the risk of an accident is consequently increased.**
- **Do not engage the clutch (i.e., release the clutch pedal) suddenly when starting the vehicle. By doing so the vehicle might unexpectedly accelerate or the transmission could malfunction.**

■ Selecting reverse gear

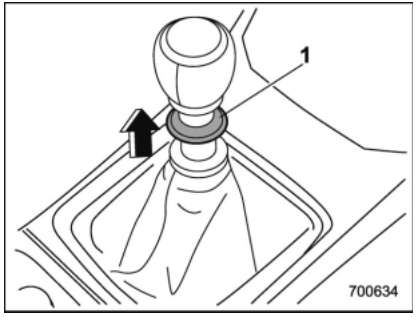

1) Slider

You must raise the slider and hold it in that position before you can move the shift lever to the “R” position.

To change gears, fully depress the clutch pedal, move the shift lever, and gradually let up on the clutch.

If it is difficult to shift into gear, put the transmission in neutral, release the clutch pedal momentarily, and then try again.

⚠ CAUTION

Shift into reverse ONLY when the vehicle has completely stopped. It may cause damage to the transmission to try shifting into reverse when the vehicle is moving.

■ Shifting speeds

▼ Recommended shifting speeds

The best compromise between fuel economy and vehicle performance during normal driving is ensured by shifting up at the speeds listed in the following table.

Shift up	mph (km/h)
1st to 2nd	15 (24)
2nd to 3rd	25 (40)
3rd to 4th	40 (64)
4th to 5th	45 (72)
5th to 6th	50 (80)

▼ Maximum allowable speeds

The following table shows the maximum speeds that are possible with each different gear. The tachometer’s needle will enter the red area if these speeds are exceeded.

With the exception of cases where sudden acceleration is required, the vehicle should not be driven with the tachometer’s needle inside the red area. Failure to observe this precaution can lead to excessive engine wear and poor fuel economy.

Gear	mph (km/h)
1st	31 (50)
2nd	50 (81)
3rd	74 (119)

⚠ WARNING

When shifting down a gear, ensure that the vehicle is not travelling at a speed exceeding the Maximum Allowable Speed for the gear which is about to be selected. Failure to observe this precaution can lead to engine over-revving and this in turn can result in engine damage.

In addition, sudden application of engine brakes when the vehicle is travelling on a slippery surface can lead to wheel locking; as a consequence, control of the vehicle may be lost and the risk of an accident increased.

NOTE

Never exceed posted speed limits.

– CONTINUED –

■ Driving tips

Do not drive with your foot resting on the clutch pedal and do not use the clutch to hold your vehicle at a standstill on an upgrade. Either of those actions may cause clutch damage.

Do not drive with your hand resting on the shift lever. This may cause wear on the transmission components.

When it is necessary to reduce vehicle speed due to slow traffic, turning corners, or driving up steep hills, downshift to a lower gear before the engine starts to labor.

On steep downgrades, downshift the transmission to 5th, 4th, 3rd or 2nd gear as necessary; this helps to maintain a safe speed and to extend brake pad life.

In this way, the engine provides a braking effect. Remember, if you “ride” (over use) the brakes while descending a hill, they may overheat and not work properly.

The engine may, on rare occasions, knock when the vehicle rapidly accelerates or rapidly pulls away from a standstill. This phenomenon does not indicate a malfunction.

Manual transmission – 5 speeds (except STI)

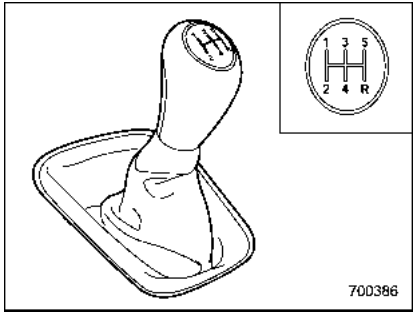

The manual transmission is a fully synchromeshed, 5-forward-speed and 1-reverse-speed transmission.

The shift pattern is shown on the shift lever knob. When shifting from 5th gear to reverse gear, first return the shift lever to the neutral position then shift into reverse gear.

To change gears, fully depress the clutch pedal, move the shift lever, and gradually let up on the clutch pedal.

If it is difficult to shift into gear, put the transmission in neutral, release the clutch pedal momentarily, and then try again.

⚠ WARNING

- **Do not drive the vehicle with the clutch disengaged (i.e., when the clutch pedal is depressed) or with the shift lever in the neutral position. Engine braking has no effect in either of these conditions and the risk of an accident is consequently increased.**
- **Do not engage the clutch (i.e., release the clutch pedal) suddenly when starting the vehicle. By doing so the vehicle might unexpectedly accelerate or the transmission could malfunction.**

⚠ CAUTION

Shift into reverse ONLY when the vehicle has completely stopped. It may cause damage to the transmission to try shifting into reverse when the vehicle is moving.

■ Shifting speeds

▼ Recommended shifting speeds

The best compromise between fuel economy and vehicle performance during normal driving is ensured by shifting up at the speeds listed in the following table.

Shift up	mph (km/h)
1st to 2nd	15 (24)
2nd to 3rd	25 (40)
3rd to 4th	40 (64)
4th to 5th	45 (72)

▼ Maximum allowable speeds

The following table shows the maximum speeds that are possible with each different gear. The tachometer's needle will enter the red area if these speeds are exceeded.

With the exception of cases where sudden acceleration is required, the vehicle should not be driven with the tachometer's needle inside the red area. Failure to observe this precaution can lead to excessive engine wear and poor fuel economy.

	mph (km/h)
1st	35 (56)
2nd	59 (95)

⚠ WARNING

When shifting down a gear, ensure that the vehicle is not travelling at a speed exceeding the Maximum Allowable Speed for the gear which is about to be selected. Failure to observe this precaution can lead to engine over-revving and this in turn can result in engine damage.

In addition, sudden application of engine brakes when the vehicle is travelling on a slippery surface can lead to wheel locking; as a consequence, control of the vehicle may be lost and the risk of an accident increased.

NOTE

Never exceed the posted speed limit.

■ Driving tips

Do not drive with your foot resting on the clutch pedal and do not use the clutch to hold your vehicle at a standstill on an upgrade. Either of those actions may cause clutch damage.

Do not drive with your hand resting on the shift lever. This may cause wear on the transmission components.

When it is necessary to reduce vehicle speed due to slow traffic, turning corners, or driving up steep hills, downshift to a lower gear before the engine starts to labor.

On steep downgrades, downshift the transmission to 4th, 3rd or 2nd gear as necessary; this helps to maintain a safe speed and to extend brake pad life.

In this way, the engine provides a braking effect. Remember, if you "ride" (over use) the brakes while descending a hill, they may overheat and not work properly.

The engine may, on rare occasions, knock when the vehicle rapidly accelerates or rapidly pulls away from a standstill. This phenomenon is not an indication of a problem in your vehicle.

Driver's Control Center Differential (DCCD) (STI)

⚠ WARNING

Always use the utmost care when driving. Being overconfident because you are driving a vehicle with a driver's control center differential could easily lead to a serious accident.

⚠ CAUTION

All the indicator lights will flash in the event that the driver's control center differential has a malfunction. Have the vehicle inspected by your SUBARU dealer.

The driver's control center differential allows you to freely change the degree of limitation of the differential action (limited slip differential (LSD) torque) of your vehicle's center differential.

By using the center differential control switch, you can set an initial LSD torque to match the road surface conditions, driving conditions and your driving style.

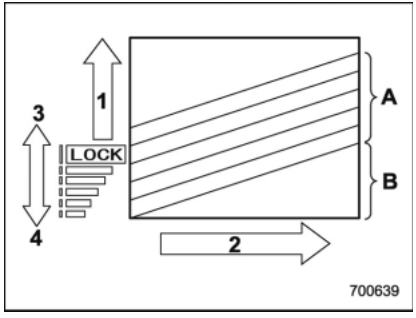

1) LSD torque
2) Traction torque
3) Initial LSD torque (maximum)
4) Initial LSD torque (minimum)
A) Initial LSD torque (adjustable)
B) Mechanical LSD torque

The driver's control center differential has an auto mode and a manual mode. In the auto mode, the system automatically adjusts the initial LSD torque. In the manual mode, you can change to the desired mode manually by using the center differential control switch.

NOTE

If you rapidly depress and release the accelerator pedal while driving at low speed, you may hear a knocking sound from the vicinity of the center differential and rear differential. This sound occurs because of the structure of the center differential. It does not indicate a problem.

■ To change mode of driver's control center differential

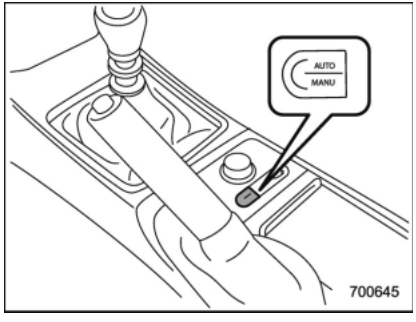

Press the "AUTO-MANU" switch on the center console to switch from auto mode to manual mode or vice versa. When you select the auto mode, the "AUTO" indicator light illuminates. When you select the manual mode, the "AUTO" indicator light turns off.

■ Auto mode

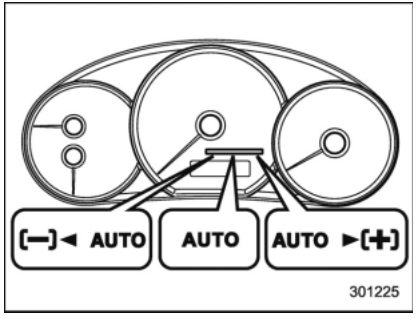

In the auto mode, the system estimates the driving and road conditions using signals from the wheel speed sensor, throttle position sensor, steering angle sensor and brake switch, etc. According to the result, it electronically and automatically controls the degree of limitation of the differential action (LSD torque) to optimize the differential action of the center differential. When the ignition switch is turned ON, the "AUTO" indicator light on the combination meter illuminates.

The auto mode has 3 modes as follows.

Mode	Operation
AUTO [+]	This mode emphasizes traction control and strengthens the limitation of differential action that is suitable for driving on slippery roads for vehicle stability.
AUTO	This mode is suitable for most driving situations.
AUTO [−]	This mode is suitable when you seek quick response from the steering wheel and smooth driving.

▼ Mode setting method

In most situations, it is recommended that the "AUTO" mode is selected.

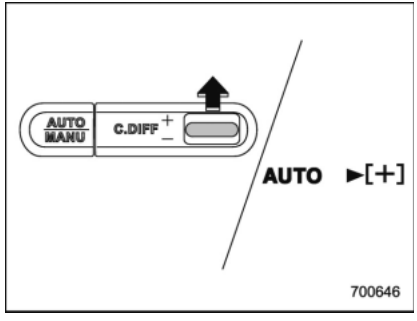

Push the control switch forward to select the "AUTO [+]" mode. After setting the mode, "AUTO►[+]" on the combination meter illuminates.

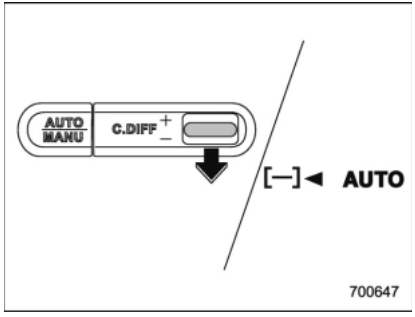

Pull the control switch rearward to select the "AUTO [−]" mode. After setting the mode, "[−]◄AUTO" on the combination meter illuminates.

When the "AUTO [+]" mode is selected, pull the control switch rearward to change to the "AUTO" mode. When the "AUTO [−]" mode is set, push the control switch forward to change to the "AUTO" mode.

– CONTINUED –

■ Manual mode

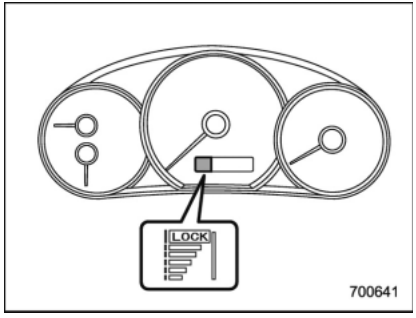

In the manual mode, you can use the center differential control switch to adjust the initial LSD torque as desired. When this mode is selected, the "AUTO" indicator light on the combination meter turns off.

▼ Center differential control switch and indicator light

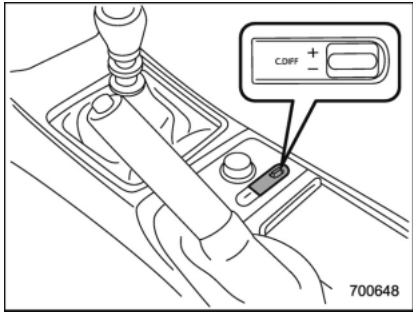

The control switch is located beside the parking brake lever. By pushing the control switch forward or pulling it rearward, it is possible to change the initial LSD torque.

The center differential indicator lights on the combination meter give six levels of indication. The indicator lights and control switch are linked; when the switch is pushed or pulled to change the initial LSD torque, the illumination position of the indicator lights changes accordingly.

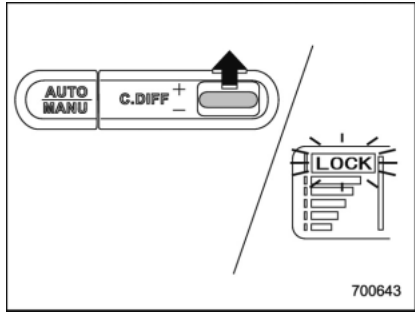

Push the switch forward to increase the initial LSD torque; when the "LOCK" indicator light illuminates, the initial LSD torque setting is maximum. The center differential will then be almost completely locked.

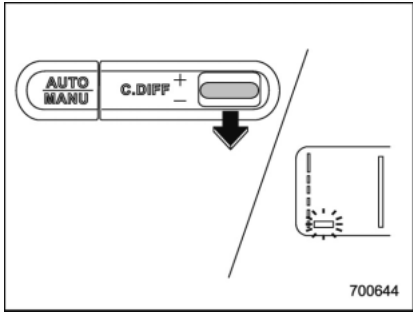

Pull the switch rearward to reduce the initial LSD torque. When the lowest position of the driver's control center differential indicator light illuminates, the initial LSD torque will be minimum. Under this condition, only the Mechanical LSD torque will limit the differential action.

⚠ CAUTION

- **Do not operate the control switch when a wheel slippage occurs. Wait until the wheelspin has been brought under control.**
- **Under any of the following conditions after setting to the manual mode, pull the center differential control switch to minimize the initial LSD torque:**
  - **When a temporary spare tire is installed**
  - **When your vehicle is towed**
  - **When the vehicle is stopped with the manual mode selected**

NOTE

• A higher initial LSD torque setting gives the vehicle greater traction when driving straight ahead but makes cornering more difficult. Remember this when adjusting the initial LSD torque. In general, higher initial LSD torque settings assist driving on slippery roads and lower settings for non-slippery roads. When the vehicle is stuck in snow or mud, setting the initial LSD torque to the maximum will help to free the vehicle.

• The setting of the initial LSD torque will remain even when the auto mode is selected or the ignition switch is turned to the "LOCK" position. However, the initial LSD torque will be minimized when the battery is disconnected and reconnected.

• During cornering or when making turns (especially when going into the garage), the rotational difference between the front and rear wheels may cause a braking effect accompanied by vibration and noise. This does not indicate a problem. The phenomenon will disappear when setting the initial LSD torque to the minimum.

In the auto mode, it controls the initial LSD torque automatically. While in the auto mode, this phenomenon sometimes occurs depending on the driving condition, however, it does not indicate a problem.

• Use the center differential indicator light only as a rough indication of the initial LSD torque.

• If you operate the center differential control switch while quickly accelerating or turning a tight corner, you may feel slight shocks. This is due to differential action by the center differential and does not indicate a problem.

■ Temporary release

When the driver stops the vehicle and pulls the parking brake lever after manually setting the initial LSD torque, the LSD torque is temporarily minimized. However the indicator on the combination meter continues to show the driver's selected initial LSD torque. When the driver releases the parking brake lever, the initial LSD torque set by the driver is restored.

SI-DRIVE (STI)

SI-DRIVE (SUBARU Intelligent Drive) works to maximize engine performance, control and efficiency.

This system consists of three modes: Intelligent (I), Sport (S), and Sport Sharp (S#). By adjusting the SI-DRIVE selector, the character of the power unit changes.

■ Intelligent (I) mode

▼ **For smooth, efficient performance driving**

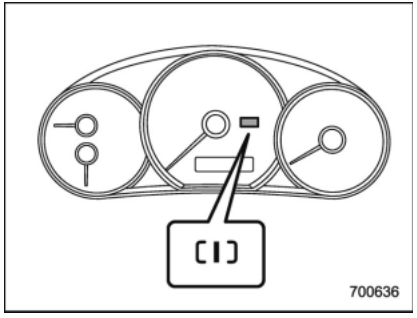

The Intelligent (I) mode provides well-balanced performance with greater fuel efficiency and smooth driveability without stress. Power delivery is moderate during acceleration for maximum fuel efficiency.

This is ideal for around-town driving and situations that do not require full power output. It provides better control in difficult driving conditions, such as slippery roads or loose surfaces, due to gentler throttle response.

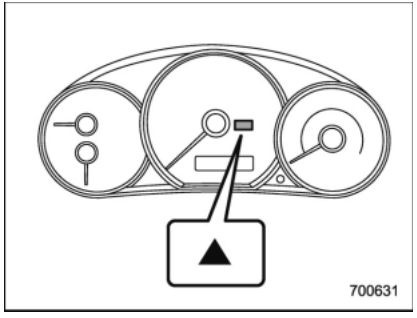

When Intelligent (I) mode is selected, a shift-up indicator "▲" on the combination meter will blink to signal the best time to shift gears for maximum fuel efficiency.

■ Sport (S) mode

▼ **For all-around performance driving**

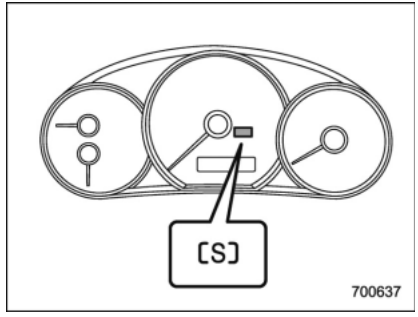

The Sport (S) mode provides the engine power desired by those who want to make the driving experience their own personal adventure.

The linear acceleration characteristic of this versatile mode is ideal for normal driving use.

■ Sport Sharp (S#) mode

▼ For maximum performance driving

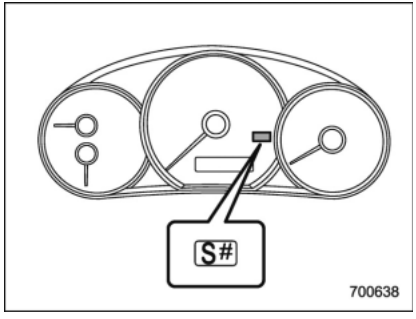

For sports-minded drivers, the Sport Sharp (S#) mode offers an exhilarating level of engine performance and control. The throttle becomes more responsive regardless of the engine speed. Delivering maximum driving enjoyment, this mode is ideal for tackling twisting roads and for merging or overtaking other vehicles on the freeway with confidence.

■ SI-DRIVE selector

When you rotate the SI-DRIVE selector to the left, the current SI-DRIVE mode changes to Sport (S) mode. When you rotate it to the right, the mode changes to Sport Sharp (S#) mode, and when you push it, the mode changes to Intelligent (I) mode. After performing this operation, the switch returns to its original location.

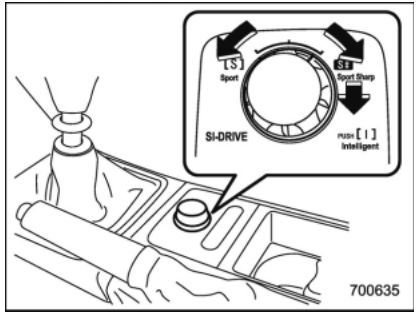

NOTE

• The next time you turn on the engine, after you turned off the engine in the Sport Sharp (S#) mode, the SI-DRIVE mode changes to the Sport (S) mode.

• The next time you turn on the engine, after you turned off the engine in the Sport (S) mode or Intelligent (I) mode, the SI-DRIVE mode will stay in the same mode as when the engine was turned off.

• While the engine is running, if the CHECK ENGINE warning light/malfunction indicator light illuminates, the SI-DRIVE mode changes to the Sport (S) mode. In this case, it is not possible to change to the Sport Sharp (S#) mode or Intelligent (I) mode.

• If there is a possibility that the engine could overheat because of a temperature increase of the engine coolant, it is not possible to change to the Sport Sharp (S#) mode. While the vehicle is in the Sport Sharp (S#) mode, it changes to the Sport (S) mode when the engine coolant temperature increases.

• If any of the SI-DRIVE indicators blink, the SI-DRIVE system may be malfunctioning. Contact your SUBARU dealer.

Limited slip differential (LSD) (STI)

The LSD provides optimum distribution of power according to the difference in revolutions between the right and left wheels that may be caused by certain driving conditions, thereby improving driving stability on snow-covered, muddy or other slippery roads or when high speed driving.

⚠ CAUTION

- **Never start the engine while a tire on one side is jacked up, as the vehicle may move.**
- **If one tire is spinning in mud, avoid continued spinning at high speed as this could adversely affect the LSD.**
- **If you use a temporary spare tire to replace a flat tire, be sure to use the original temporary spare tire stored in the vehicle. Using other sizes will adversely affect the LSD.**

Power steering

The power steering system operates only when the engine is running.

If you lose power steering assist because the engine stops or the system fails to function, you can steer but it will take much more effort.

⚠ CAUTION

Do not hold the steering wheel at the fully locked position left or right for more than 5 seconds. This may damage the power steering pump.

NOTE

Right after the engine has been started and before it has warmed up, you may hear a noise coming from areas adjacent to the power steering pump which is located at the right-front area of the engine compartment. This noise is normal. It does not indicate power steering system trouble.

Braking

■ Braking tips

⚠ WARNING

Never rest your foot on the brake pedal while driving. This can cause dangerous overheating of the brakes and needless wear on the brake pads and linings.

▼ When the brakes get wet

When driving in rain or after washing the vehicle, the brakes may get wet. As a result, brake stopping distance will be longer. To dry the brakes, drive the vehicle at a safe speed while lightly depressing the brake pedal to heat up the brakes.

▼ Use of engine braking

Remember to make use of engine braking in addition to foot braking. When descending a grade, if only the foot brake is used, the brakes may start working improperly because of brake fluid overheating, caused by overheated brake pads. To help prevent this, shift into a lower gear to get stronger engine braking.

▼ Braking when a tire is punctured

Do not depress the brake pedal suddenly when a tire is punctured. This could cause

a loss of control of the vehicle. Keep driving straight ahead while gradually reducing speed. Then slowly pull off the road to a safe place.

■ Brake system

▼ Two separate circuits

Your vehicle has two separate circuit brake systems. Each circuit works diagonally across the vehicle. If one circuit of the brake system should fail, the other half of the system still works. If one circuit fails, the brake pedal will go down much closer to the floor than usual and you will need to press it down much harder. And a much longer distance will be needed to stop the vehicle.

▼ Brake booster

The brake booster uses engine manifold vacuum to assist braking force. Do not turn off the engine while driving because that will turn off the brake booster, resulting in poor braking power.

The brakes will continue to work even when the brake booster completely stops functioning. If this happens, however, you will have to depress the pedal much harder than normal and the braking distance will increase.

▼ Brake assist system

⚠ WARNING

Do not be overconfident about the brake assist. It is not a system that brings more braking ability to the vehicle beyond its braking capability. Always use the utmost care when driving regarding vehicle speed and safe distance.

⚠ CAUTION

When you need to brake suddenly, continue depressing the brake pedal strongly to bring the effect of the brake assist.

Brake assist is a driver assistance system. It assists the brake power when the driver cannot depress the brake pedal strongly and the brake power is insufficient.

Brake assist generates the brake power according to the speed at which the driver depresses the brake pedal.

NOTE

When you depress the brake pedal strongly or suddenly, the following phenomena occur. However, even though these occur, they do not indicate any malfunctions, and the brake assist system is operating properly.

- **You might feel that the brake pedal is applied by lighter force and generates a greater braking force.**
- **You might hear the sound of ABS operating from the engine compartment.**

■ Disc brake pad wear warning indicators

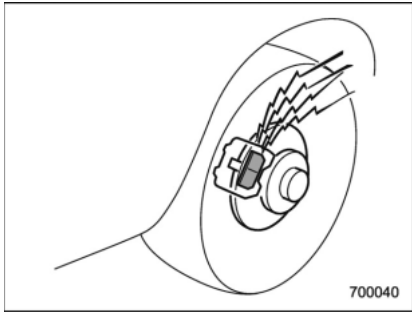

The disc brake pad wear warning indicators on the disc brakes give a warning noise when the brake pads are worn.

If a squeaking or scraping noise is heard from the disc brakes while braking, immediately have your vehicle checked by your SUBARU dealer.

ABS (Anti-lock Brake System)

The ABS system prevents the lock-up of wheels which may occur during sudden braking or braking on slippery road surfaces. This helps prevent the loss of steering control and directional stability caused by wheel lock-up.

When the ABS system is operating, you may hear a chattering noise or feel a slight vibration in the brake pedal. This is normal when the ABS operates.

The ABS system will not operate when the vehicle speed is below approximately 6 mph (10 km/h).

⚠ WARNING

Always use the utmost care in driving – overconfidence because you are driving with an ABS equipped vehicle could easily lead to a serious accident.

⚠ CAUTION

- **The ABS system does not always decrease stopping distance. You should always maintain a safe following distance from other vehicles.**
- **When driving on badly surfaced roads, gravel roads, icy roads, or over deep newly fallen snow, stopping distances may be longer for a vehicle with the ABS system than one without. When driving under these conditions, therefore, reduce your speed and leave ample distance from other vehicles.**
- **When you feel the ABS system operating, you should maintain constant brake pedal pressure. Do not pump the brake pedal since doing so may defeat the operation of the ABS system.**

■ ABS system self-check

Just after the vehicle is started, you may feel on the brake pedal a vibration similar to when the ABS operates, and you may also hear the sound of the ABS working from the engine compartment. This is caused by an automatic functional test of the ABS system being carried out and does not indicate any abnormal condition.

■ ABS warning light

Refer to “ABS warning light” ☞3-18.

Electronic Brake Force Distribution (EBD) system

The EBD system maximizes the effectiveness of the brakes by allowing the rear brakes to supply a greater proportion of the braking force. It functions by adjusting the distribution of braking force to the rear wheels in accordance with the vehicle's loading condition and speed.

The EBD system is an integral part of the ABS system and uses some of the ABS system's components to perform its function of optimizing the distribution of braking force. If any of the ABS components used by the EBD system malfunction, the EBD system also stops working.

When the EBD system is operating, you may hear a chattering noise or feel a slight vibration in the brake pedal. This is normal and does not indicate a malfunction.

■ Steps to take if EBD system malfunctions

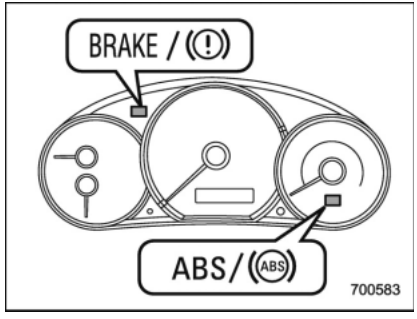

If a malfunction occurs in the EBD system, the system stops working and the brake system warning light and ABS warning light illuminate simultaneously.

The EBD system may be malfunctioning if the brake system warning light and ABS warning light illuminate simultaneously during driving.

Even if the EBD system malfunctions, the conventional braking system will still function. However, the rear wheels will be more prone to locking when the brakes are applied harder than usual and the vehicle's motion may therefore become somewhat harder to control.

If the brake system warning light and ABS warning light illuminate simultaneously, take the following steps.

1. Stop the vehicle in the nearest safe, flat location.
2. Shut down the engine, apply the parking brake, and then restart it.
3. Release the parking brake. If both warning lights turn off, the EBD system may be malfunctioning. Drive carefully to the nearest SUBARU dealer and have the system inspected.
4. If both warning lights illuminate again and remain illuminated after the engine has been restarted, shut down the engine again, apply the parking brake, and check the brake fluid level. Refer to "Brake fluid" ☞11-18.
5. If the brake fluid level is not below the "MIN" mark, the EBD system may be malfunctioning. Drive carefully to the nearest SUBARU dealer and have the system inspected.
6. If the brake fluid level is below the "MIN" mark, DO NOT drive the vehicle. Instead, have the vehicle towed to the nearest SUBARU dealer for repair.

⚠ WARNING

- **Driving with the brake system warning light illuminated is dan-**

– CONTINUED –

gerous. This indicates your brake system may not be working properly. If the light remains illuminated, have the brakes inspected by a SUBARU dealer immediately.

- If at all in doubt about whether the brakes are operating properly, do not drive the vehicle. Have your vehicle towed to the nearest SUBARU dealer for repair.

Vehicle Dynamics Control system

⚠ WARNING

Always use the utmost care in driving – overconfidence because you are driving with a Vehicle Dynamics Control system equipped vehicle could easily lead to a serious accident.

⚠ CAUTION

- Even if your vehicle is equipped with Vehicle Dynamics Control system, winter tires should be used when driving on snow-covered or icy roads; in addition, vehicle speed should be reduced considerably. Simply having a Vehicle Dynamics Control system does not guarantee that the vehicle will be able to avoid accidents in any situation.
- Activation of the Vehicle Dynamics Control system is an indication that the road being travelled on has a slippery surface; since having Vehicle Dynamics Control is no guarantee that full vehicle control will be maintained at all times and under all conditions, its activation should be seen as a sign that the speed of the vehicle should be reduced considerably.
- Whenever suspension components, steering components, or an axle are removed from a vehicle, have an inspection of that system performed by an authorized SUBARU dealer.
- The following precautions should be observed in order to ensure that the Vehicle Dynamics Control system is operating properly:
  - All four wheels should be fitted with tires of the same size, type, and brand. Furthermore, the amount of wear should be the same for all four tires.
  - Keep the tire pressure at the proper level as shown on the vehicle placard attached to the driver's side door pillar.
  - Use only the specified temporary spare tire to replace a flat tire. With a temporary spare tire, the effectiveness

of the Vehicle Dynamics Control system is reduced and this should be taken into account when driving the vehicle in such a condition.

- **If non-matching tires are used, the Vehicle Dynamics Control system may not operate correctly.**
- **The Vehicle Dynamics Control system helps prevent unstable vehicle motion such as skidding using control of the brakes and engine power. Do not turn off the Vehicle Dynamics Control system unless it is absolutely necessary. If you must turn off the Vehicle Dynamics Control system, drive very carefully based on the road surface condition.**

In the event of wheelspin and/or skidding on a slippery road surface and/or during cornering and/or an evasive maneuver, the Vehicle Dynamics Control system adjusts the engine's output and the wheels' respective braking forces to help maintain traction and directional control.

- **Traction Control Function**

The traction control function is designed to prevent spinning of the driving wheels on slippery road surfaces, thereby helping to maintain traction and directional control. Activation of this function is indicated by steady illumination of the Vehicle Dynamics Control operation indicator light.

- **Skid Suppression Function**

The skid suppression function is designed to help maintain directional stability by suppressing the wheels' tendency to slide sideways during steering operations. Activation of this function is indicated by flashing of the Vehicle Dynamics Control operation indicator light.

NOTE

- **The Vehicle Dynamics Control system may be considered normal when the following conditions occur.**
  - **– Slight twitching of the brake pedal is felt.**
  - **– The vehicle or steering wheel shakes to a small degree.**
  - **– An operating sound from the engine compartment is heard briefly when starting the engine and when driving off after starting the engine.**
  - **– The brake pedal seems to jolt when driving off after starting the engine.**
- **In the following circumstances, the vehicle may be less stable than it feels to the driver. The Vehicle Dynamics Control System may therefore operate. Such operation does not indicate a system malfunction.**
  - **– on gravel-covered or rutted roads**
  - **– on unfinished roads**
  - **– when the vehicle is fitted with snow tires or winter tires**
- **Activation of the Vehicle Dynamics Control system will cause operation of the steering wheel to feel slightly different compared to that for normal conditions.**
- **It is always important to reduce speed when approaching a corner, even if the vehicle is equipped with Vehicle Dynamics Control.**
- **Always turn off the engine before replacing a tire as failure to do so may render the Vehicle Dynamics Control system unable to operate correctly.**

■ Vehicle Dynamics Control system monitor

Refer to "Vehicle Dynamics Control warning light/Vehicle Dynamics Control operation indicator light" ☞3-20 and "Vehicle Dynamics Control OFF indicator light/Traction Control OFF indicator light (STI)" ☞3-21.

– CONTINUED –

■ Vehicle Dynamics Control OFF switch (STI)

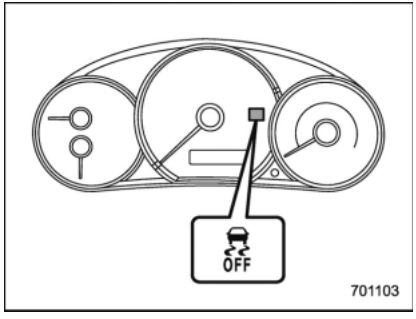

Indicator light

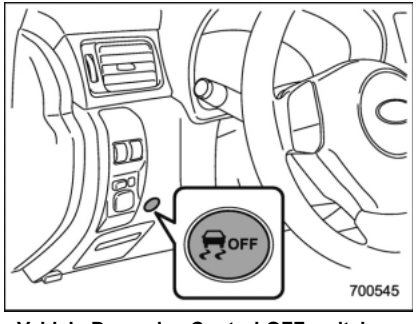

Vehicle Dynamics Control OFF switch

When the switch is pressed briefly or for more than approximately 3 seconds during engine operation, the mode of the Vehicle Dynamics Control System will be changed.

▼ Vehicle Dynamics Control mode

When the ignition switch is on, this mode is selected.

This mode enables all controls for ABS, the Traction Control System, and the Vehicle Dynamics Control system. Select this mode for most driving situations.

When this mode is selected, the indicator light on the combination meter turns off.

▼ Traction mode

This mode restricts the functions of the Traction Control System and Vehicle Dynamics Control system and thus delays utilizing their functions as a reaction to vehicle behavior in comparison with the Vehicle Dynamics Control mode. This mode should be used in driving situations where the vehicle dynamic performance will improve without decreasing engine torque control.

When the switch is pressed briefly during engine operation, the indicator light on the combination meter illuminates in green. When the switch is pressed again to reactivate the Vehicle Dynamics Control system, the indicator light turns off.

▼ Vehicle Dynamics Control OFF mode

This mode allows only the ABS control. This mode should be used in an emergency situation such as getting out of snow or mud.

When the switch is pressed for more than approximately 3 seconds during engine operation, the indicator light on the combination meter illuminates in yellow. When the switch is pressed again to reactivate the Vehicle Dynamics Control system, the indicator light turns off.

NOTE

• The Vehicle Dynamics Control system will be activated automatically when the engine is started.

• If the switch is held down for 10 seconds or longer, the indicator light turns off, the Vehicle Dynamics Control system is activated, and the system ignores any further pressing of the switch. To make the switch usable again, turn the ignition switch to the "LOCK" position and restart the engine.

• When the Vehicle Dynamics Control OFF mode is selected, the vehicle's running performance is comparable with that of a vehicle that does not have a Vehicle Dynamics Control sys-

tem. Do not deactivate the Vehicle Dynamics Control system except when absolutely necessary.

• Even when the Vehicle Dynamics Control OFF mode is selected, components of the brake control system may still activate. When the brake control system is activated, the Vehicle Dynamics Control operation indicator light illuminates.

■ Vehicle Dynamics Control OFF switch (except STI)

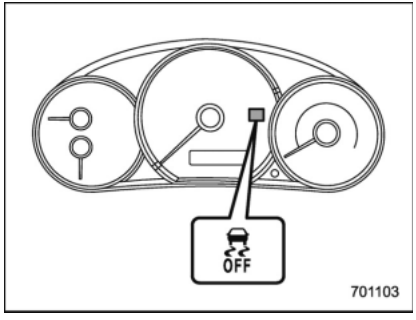

Indicator light

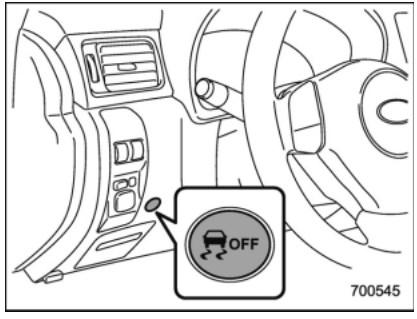

Vehicle Dynamics Control OFF switch

Pressing the switch to deactivate the Vehicle Dynamics Control system can facilitate the following operations:

• a standing start on a steeply sloping road with a snowy, gravel-covered, or otherwise slippery surface

• extrication of the vehicle when its wheels are stuck in mud or deep snow

When the switch is pressed during engine operation, the Vehicle Dynamics Control OFF indicator light on the combination meter illuminates. The Vehicle Dynamics Control system will be deactivated and the vehicle will behave like a model not equipped with the Vehicle Dynamics Control system. When the switch is pressed again to reactivate the Vehicle Dynamics Control system, the Vehicle Dynamics Control OFF indicator light turns off.

With the Vehicle Dynamics Control system deactivated, traction and stability enhancement offered by Vehicle Dynamics Control system is unavailable. Therefore you should not deactivate the Vehicle Dynamics Control system except under above-mentioned situations.

NOTE

• The Vehicle Dynamics Control system will be activated automatically when the engine is started.

• If the switch is held down for 10 seconds or longer, the indicator light turns off, the Vehicle Dynamics Control system is activated, and the system ignores any further pressing of the switch. To make the switch usable again, turn the ignition switch to the "LOCK" position and restart the engine.

• When the switch is pressed to deactivate the Vehicle Dynamics Control system, the vehicle's running performance is comparable with that of a vehicle that does not have a Vehicle Dynamics Control system. Do not deactivate the Vehicle Dynamics Control system except when absolutely necessary.

– CONTINUED –

• Even when the Vehicle Dynamics Control system is deactivated, components of the brake control system may still activate. When the brake control system is activated, the Vehicle Dynamics Control operation indicator light illuminates.

Tire pressure monitoring system (TPMS) (U.S.-spec. models)

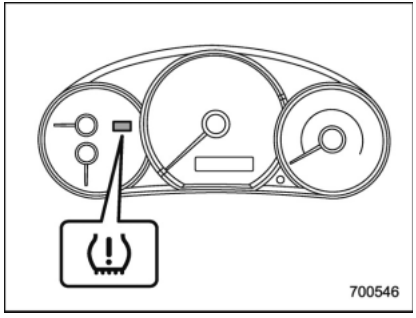

The tire pressure monitoring system provides the driver with a warning message by sending a signal from a sensor that is installed in each wheel when tire pressure is severely low.

The tire pressure monitoring system will activate only when the vehicle is driven at speeds above 20 mph (32 km/h). Also, this system may not react immediately to a sudden drop in tire pressure (for example, a blow-out caused by running over a sharp object).

⚠ WARNING

If the low tire pressure warning light illuminates while driving, never brake suddenly and keep driving straight ahead while gradually reducing speed. Then slowly pull off the road to a safe place. Otherwise an accident involving serious vehicle damage and serious personal injury could occur.

Check the pressure for all four tires and adjust the pressure to the COLD tire pressure shown on the tire placard on the door pillar on the driver's side.

Even when the vehicle is driven a very short distance, the tires get warm and their pressures increase accordingly. Be sure to let the tires cool thoroughly before adjusting their pressures to the standard values shown on the tire placard. Refer to "Tires and wheels" ☞11-24. The tire pressure monitoring system does not function when the vehicle is stationary. After adjusting the tire pressures, increase the vehicle speed to at least 20 mph (32 km/h) to start the TPMS re-checking of the tire inflation pressures. If the tire pressures are now above the severe

low pressure threshold, the low tire pressure warning light should turn off a few minutes later.

If this light still illuminates while driving after adjusting the tire pressure, a tire may have significant damage and a fast leak that causes the tire to lose air rapidly. If you have a flat tire, replace it with a spare tire as soon as possible.

When a spare tire is mounted or a wheel rim is replaced without the original pressure sensor/transmitter being transferred, the low tire pressure warning light will illuminate steadily after blinking for approximately one minute. This indicates the TPMS is unable to monitor all four road wheels. Contact your SUBARU dealer as soon as possible for tire and sensor replacement and/or system resetting.

Do not inject any tire liquid or aerosol tire sealant into the tires, as this may cause a malfunction of the tire pressure sensors. If the light illuminates steadily after blinking for approximately one minute, promptly contact a SUBARU dealer to have the system inspected.

⚠ CAUTION

- **Do not place metal film or any metal parts in the cargo area/trunk. This may cause poor reception of the signals from the tire pressure sensors, and the tire pressure monitoring system will not function properly.**
- **FCC WARNING**

  Changes or modifications not expressly approved by the party responsible for compliance could void the user's authority to operate the equipment.

NOTE

This device complies with Part 15 of the FCC Rules and RSS-Gen of IC Rules. Operation is subject to the following two conditions: (1) this device may not cause harmful interference, and (2) this device must accept any interference received, including interference that may cause undesired operation.

Parking your vehicle

■ Parking brake

To set the parking brake, depress the brake pedal firmly and hold it down until the parking brake lever is fully pulled up.

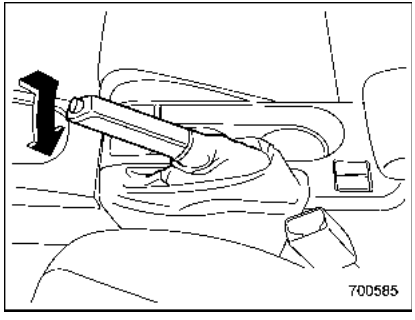

To release the parking brake, pull the lever up slightly, press the release button, then lower the lever while keeping the button pressed.

When the parking brake is set while the engine is running, the parking brake warning light illuminates. After starting the vehicle, be sure that the warning light has turned off before the vehicle is driven. Refer to "Parking brake warning" ☞3-19.

– CONTINUED –

⚠ CAUTION

Never drive while the parking brake is set because this will cause unnecessary wear on the brake linings. Before starting to drive, always make sure that the parking brake has been fully released.

■ Parking tips

When parking your vehicle, always perform the following items.

- Apply the parking brake firmly.
- Put the shift lever in “1” (1st) for an upgrade or “R” (Reverse) for a downgrade.

Never rely on the transmission alone to hold the vehicle.

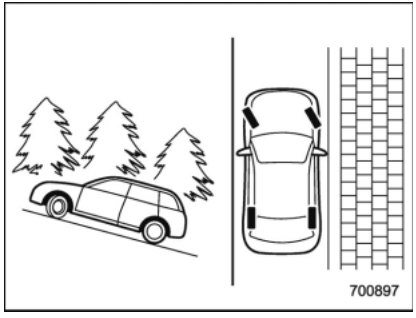

When parking on a hill, always turn the steering wheel. When the vehicle is headed up the hill, the front wheels should be turned away from the curb.

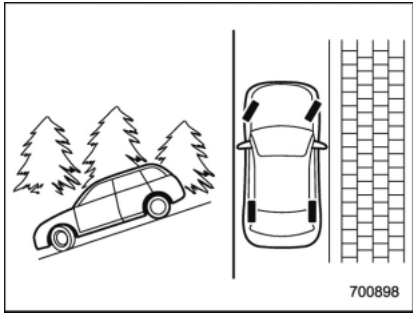

When facing downhill, the front wheels should be turned into the curb.

⚠ WARNING

- **Never leave unattended children or pets in the vehicle. They could accidentally injure themselves or others through inadvertent operation of the vehicle. Also, on hot or sunny days, the temperature in a closed vehicle could quickly become high enough to cause severe or possibly fatal injuries to people.**
- **Do not park the vehicle over flammable materials such as dry grass, waste paper or rags, as they may burn easily if they come near hot engine or exhaust system parts.**
- **Be sure to stop the engine if you take a nap in the vehicle. If engine exhaust gas enters the passenger compartment, occupants in the vehicle could die from carbon monoxide (CO) contained in the exhaust gas.**

⚠ CAUTION

If your vehicle has a front underspoiler and rear underspoiler (both optional), pay attention to blocks

and other obstructions on the ground when parking. The underspoilers could be damaged by contact with them.

Hill start assist system

⚠ CAUTION

The Hill start assist system is a device only for helping the driver to START the vehicle on an uphill grade. To prevent accidents when the vehicle is parked on a slope, be sure to firmly set the parking brake. When setting the parking brake, make sure that the vehicle remains stationary when the clutch pedal is released.

The Hill start assist system is a device to make starting on an uphill grade easier.

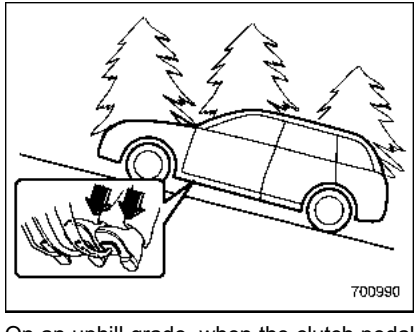

On an uphill grade, when the clutch pedal is depressed while the brake pedal is also depressed, braking power is maintained temporarily by the Hill start assist system when the brake pedal is released. The driver is therefore able to start the vehicle the same way as on a level grade, just using the clutch and accelerator pedal.

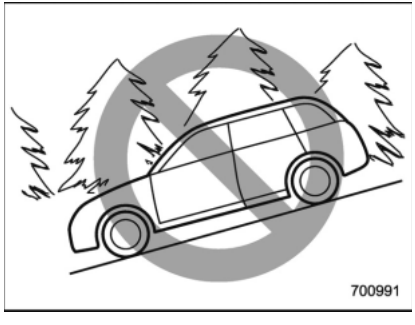

The Hill start assist system does not operate when the vehicle is facing downhill. And the Hill start assist system may not operate on slight grades.

When starting in reverse and using the Hill start assist system, a braking effect may be felt even after the brake pedal has been released. However, this braking effect should disappear once the clutch pedal is released.

A slight jolt may be felt when the vehicle

– CONTINUED –

begins to move forward after being reversed.

If the braking power of the Hill start assist system is insufficient after the brake pedal is released, apply more braking power by depressing the brake pedal again.

■ To activate/deactivate the Hill start assist system (STI)

⚠ CAUTION

While the Hill start assist system is deactivated, when starting on an uphill grade, braking power is not maintained if the brake pedal is released. Start on an uphill grade by using the parking brake.

You can activate/deactivate the Hill start assist system according to the following procedure.

▼ To deactivate

1. Stop your vehicle in a flat and safe place and apply the parking brake.
2. Turn off the engine.
3. Restart the engine.

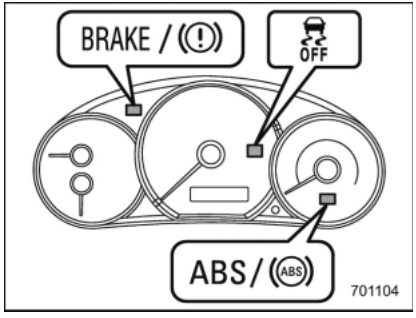

4. Confirm the following items.
   - The ABS warning light turns off.
   - The Vehicle Dynamics Control OFF indicator light turns off.
   - The Brake system warning light illuminates.

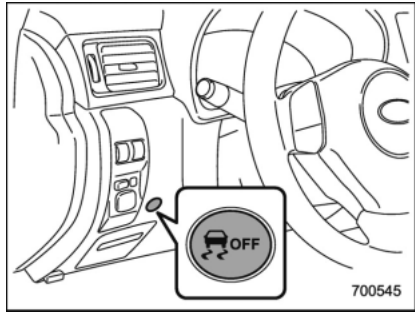

5. Press the Vehicle Dynamics Control OFF switch and hold it until the Vehicle Dynamics Control OFF indicator light turns off. The Vehicle Dynamics Control OFF indicator light will illuminate in green, change to yellow, remain illuminated in yellow for several seconds and then turn off.
6. Within 5 seconds after the Vehicle Dynamics Control OFF indicator light turns off, release the Vehicle Dynamics Control OFF switch.

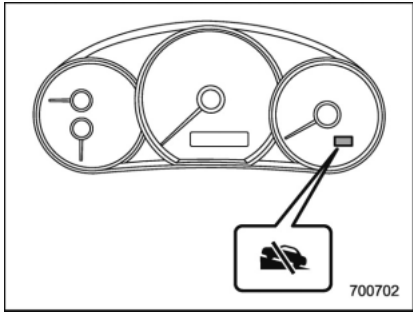

7. Within 2 seconds after releasing the Vehicle Dynamics Control OFF switch, press the Vehicle Dynamics Control OFF switch once again. Then the Hill start assist OFF indicator light illuminates.
8. Turn off the engine.
9. Restart the engine.

While the Hill start assist system is deactivated, the Hill start assist OFF indicator light illuminates continuously.

▼ To activate

When the procedure to deactivate the Hill start assist system is performed again, the system is activated. When the Hill start assist system is activated, the Hill start assist OFF indicator light turns off.

■ Hill start assist warning light/ Hill start assist OFF indicator light

Refer to “Hill start assist warning light/Hill start assist OFF indicator light (STI)” ☞3-20.

Cruise control

Cruise control enables you to maintain a constant vehicle speed without holding your foot on the accelerator pedal and it is operative when the vehicle speed is 25 mph (40 km/h) or more.

⚠ WARNING

Do not use the cruise control under any of the following conditions. These may cause loss of vehicle control.

- **driving up or down a steep grade**
- **driving on slippery or winding roads**
- **driving in heavy traffic**

NOTE

• If you press the “CRUISE” main switch button while turning the ignition switch “ON”, the cruise control function is deactivated and the cruise control indicator light flashes. To re-activate the cruise control function, turn the ignition switch back to the “Acc” or “LOCK” position, and then turn it again to the “ON” position.
• Make sure the “CRUISE” main switch is turned off when the cruise

– CONTINUED –

control is not in use to avoid unintentionally setting of the cruise control.

■ To set cruise control

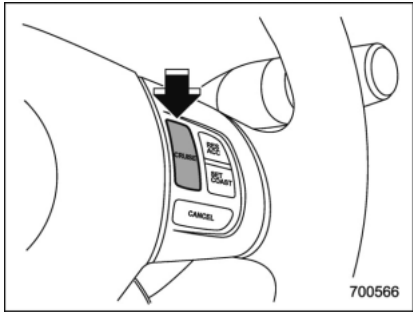

1. Push the “CRUISE” main switch button.

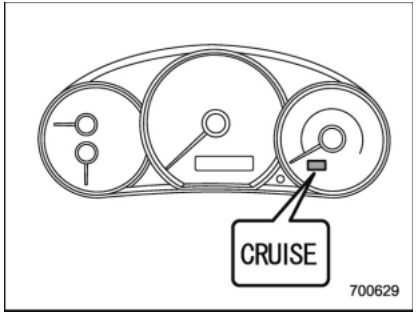

The cruise control indicator light on the combination meter will illuminate.

2. Depress the accelerator pedal until the vehicle reaches the desired speed.

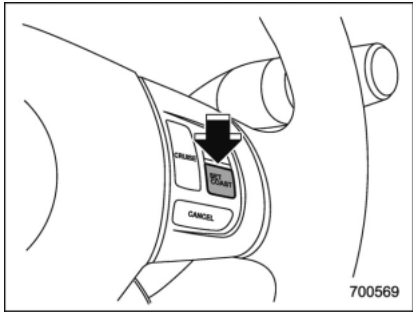

3. Push the “SET/COAST” button and release it. Then release the accelerator pedal.

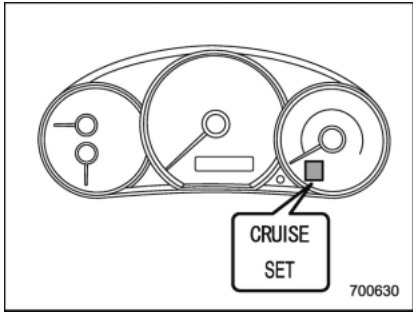

At this time, the cruise control set indicator light is illuminated on the combination meter.

The vehicle will maintain the desired speed.

Vehicle speed can be temporarily increased while driving with the cruise control activated. Simply depress the accelerator pedal to accelerate the vehicle. When the accelerator pedal is released, the vehicle will return to and maintain the previous cruising speed.

■ To temporarily cancel the cruise control

The cruise control can be temporarily canceled in the following ways.

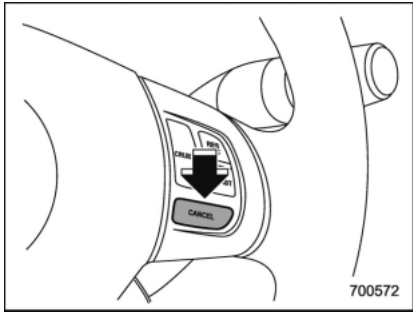

- Push the “CANCEL” button.
- Depress the brake pedal.
- Depress the clutch pedal.

The cruise control set indicator light on the combination meter turns off when the cruise control is canceled.

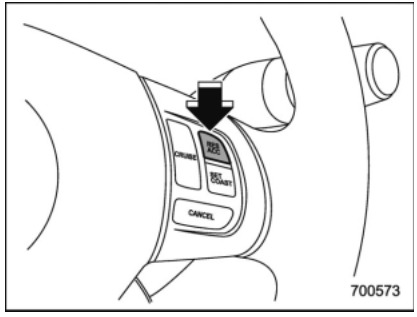

To resume the cruise control after it has been temporarily canceled and with vehicle speed of approximately 20 mph (32 km/h) or more, push the “RES/ACC” button to return to the original cruising speed automatically.

The cruise control set indicator light on the combination meter will automatically illuminate at this time.

■ To turn off the cruise control

There are two ways to turn off the cruise control:

- Push the “CRUISE” main switch button again.
- Turn the ignition switch to the “Acc” or “LOCK” position (but only when the vehicle is completely stopped).

■ To change the cruising speed

▼ To increase the speed (by button)

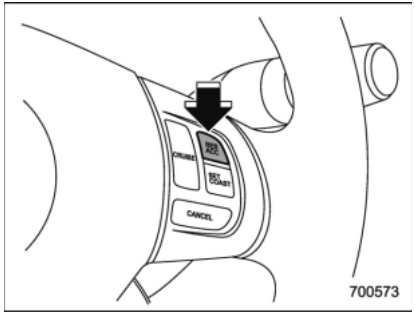

Push the “RES/ACC” button and hold it until the vehicle reaches the desired speed. Then, release the button. The vehicle speed at that moment will be memorized and treated as the new set speed.

When the difference between the actual vehicle speed and the set speed is less than 4 mph (6.8 km/h), the set speed can be increased 1 mph (1.6 km/h) each time by pressing the “RES/ACC” button quickly.

– CONTINUED –

▼ **To increase the speed (by accelerator pedal)**

1. Depress the accelerator pedal to accelerate the vehicle to the desired speed.
2. Push the “SET/COAST” button once. Now the desired speed is set and the vehicle will keep running at that speed without depressing the accelerator pedal.

NOTE

If the difference between the actual vehicle speed when the button is pushed and the speed last time you set is less than 4 mph (6.8 km/h), the vehicle speed will be lowered by 1 mph (1.6 km/h). This occurs because the cruise control system unit regards this operation as that intended to decrease the vehicle speed.

▼ **To decrease the speed (by button)**

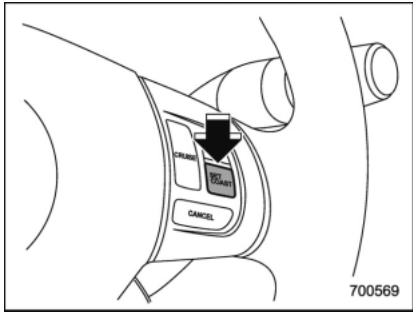

Push the “SET/COAST” button and hold it until the vehicle reaches the desired speed. Then, release the button. The vehicle speed at that moment will be memorized and treated as the new set speed.

When the difference between the actual vehicle speed and the set speed is less than 4 mph (6.8 km/h), the set speed can be lowered 1 mph (1.6 km/h) each time by pressing the “SET/COAST” button quickly.

▼ **To decrease the speed (by brake pedal)**

1. Depress the brake pedal to release cruise control temporarily.
2. When the speed decreases to the desired speed, press the “SET/COAST” button once. Now the desired speed is set and the vehicle will keep running at that speed without depressing the accelerator pedal.

■ Cruise control indicator light

Refer to “Cruise control indicator light” ☞3-24.

■ Cruise control set indicator light

Refer to “Cruise control set indicator light” ☞3-24.

New vehicle break-in driving – the first 1,000 miles (1,600 km) 8-2
Fuel economy hints 8-2
Engine exhaust gas (carbon monoxide)..... 8-2
Catalytic converter..... 8-3
Periodic inspections 8-4
Driving in foreign countries 8-4
Driving tips for AWD models..... 8-4
Winter driving..... 8-6
Operation during cold weather..... 8-6
Driving on snowy and icy roads 8-7
Corrosion protection..... 8-8
Snow tires..... 8-8
Tire chains 8-9
Rocking the vehicle 8-9
Loading your vehicle..... 8-10
Vehicle capacity weight..... 8-10
GVWR and GAWR (Gross Vehicle Weight Rating and Gross Axle Weight Rating) 8-11
Roof molding and crossbar (if equipped)..... 8-12
Trailer towing 8-13

New vehicle break-in driving – the first 1,000 miles (1,600 km)

The performance and long life of your vehicle are dependent on how you handle and care for your vehicle while it is new. Follow these instructions during the first 1,000 miles (1,600 km):

- Do not race the engine. And do not allow engine speed to exceed 4,000 rpm except in an emergency.
- Do not drive at one constant engine or vehicle speed for a long time, either fast or slow.
- Avoid starting suddenly and rapid acceleration, except in an emergency.
- Avoid hard braking, except in an emergency.

The same break-in procedures should be applied to an overhauled engine, newly mounted engine or when brake pads or brake linings are replaced with new ones.

Fuel economy hints

The following suggestions will help to save fuel.

- Select the proper gear position for the speed and road conditions.
- Avoid sudden acceleration or deceleration. Always accelerate gently until you reach the desired speed. Then try to maintain that speed for as long as possible.
- Do not pump the accelerator and avoid racing the engine.
- Avoid unnecessary engine idling.
- Keep the engine properly tuned.
- Keep the tires inflated to the correct pressure shown on the tire placard, which is located under the door latch on the driver's side. Low pressure will increase tire wear and fuel consumption.
- Use the air conditioner only when necessary.
- Keep the front and rear wheels in proper alignment.
- Avoid carrying unnecessary luggage or cargo.

Engine exhaust gas (carbon monoxide)

⚠ WARNING

- **Never inhale engine exhaust gas. Engine exhaust gas contains carbon monoxide, a colorless and odorless gas which is dangerous, or even lethal, if inhaled.**
- **Always properly maintain the engine exhaust system to prevent engine exhaust gas from entering the vehicle.**
- **Never run the engine in a closed space, such as a garage, except for the brief time needed to drive the vehicle in or out of it.**
- **Avoid remaining in a parked vehicle for a lengthy time while the engine is running. If that is unavoidable, then use the ventilation fan to force fresh air into the vehicle.**
- **Always keep the front ventilator inlet grille free from snow, leaves or other obstructions to ensure that the ventilation system always works properly.**
- **If at any time you suspect that**

exhaust fumes are entering the vehicle, have the problem checked and corrected as soon as possible. If you must drive under these conditions, drive only with all windows fully open.

- **Keep the trunk lid (4-door) or rear gate (5-door) closed while driving to prevent exhaust gas from entering the vehicle.**

NOTE

Due to the expansion and contraction of the metals used in the manufacture of the exhaust system, you may hear a crackling sound coming from the exhaust system for a short time after the engine has been shut off. This sound is normal.

Catalytic converter

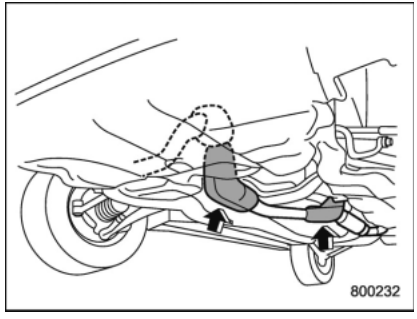

The catalytic converter is installed in the exhaust system. It serves as a catalyst to reduce HC, CO and NOx in exhaust gases, thus providing cleaner exhaust.

To avoid damage to the catalytic converter:

- Use only unleaded fuel. Even a small amount of leaded fuel will damage the catalytic converter.
- Never start the engine by pushing or pulling the vehicle.
- Avoid racing the engine.
- Never turn off the ignition switch while the vehicle is moving.
- Keep your engine tuned-up. If you feel the engine running rough (misfiring, backfiring or incomplete combustion), have your vehicle checked and repaired by an authorized SUBARU dealer.
- Do not apply undercoating or rust prevention treatment to the heat shield of catalytic converter and the exhaust system.
- Do not drive with an extremely low fuel level.

⚠ WARNING

- **Avoid fire hazards. Do not drive or park the vehicle anywhere near flammable materials (e.g., grass, paper, rags or leaves), because the catalytic converter operates at very high temperatures.**
- **Keep everyone and flammable materials away from the exhaust pipe while the engine is running. The exhaust gas is very hot.**

Periodic inspections

To keep your vehicle in the best condition at all times, always have the recommended maintenance services listed in the maintenance schedule in the "Warranty and Maintenance Booklet" performed at the specified time or mileage intervals.

Driving in foreign countries

When planning to use your vehicle in another country:

- Confirm the availability of the correct fuel. Refer to "Fuel requirements" ☞7-3.
- Comply with all regulations and requirements of each country.

Driving tips for AWD models

⚠ WARNING

- **Always maintain a safe driving speed according to the road and weather conditions in order to avoid having an accident on a sharp turn, during sudden braking or under other similar conditions.**
- **Always use the utmost care in driving – overconfidence because you are driving an All-Wheel Drive vehicle could easily lead to a serious accident.**
- **When you replacing or installing tire(s), all four tires must be the same for following items.**
  (a) Size
  (b) Circumference
  (c) Speed symbol
  (d) Load index
  (e) Construction
  (f) Manufacturer
  (g) Brand (tread pattern)
  (h) Degrees of wear
  For the items (a) to (d), you must obey the specification that is

printed on the tire placard. The tire placard is located on the bottom of driver's door pillar.

If all of four tires are not the same for items (a) to (h), there is a possibility that serious mechanical damage could occur to the drive train of your car, and affect the following.

— Ride

— Handling

— Braking

— Speedometer/Odometer calibration

— Clearance between the body and tires

It also may be dangerous and lead to loss of vehicle control, and it can lead to an accident.

⚠ CAUTION

If you use a temporary spare tire to replace a flat tire, be sure to use the original temporary spare tire stored in the vehicle. Using other sizes may result in severe mechanical damage to the drive train of your vehicle.

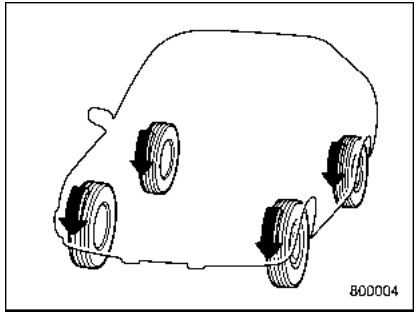

All-Wheel Drive distributes the engine power to all four wheels. AWD models provide better traction when driving on slippery, wet or snow-covered roads and when moving out of mud, dirt and sand. By shifting power between the front and rear wheels, SUBARU AWD can also provide added traction during acceleration and added engine braking force during deceleration.

Therefore, your SUBARU AWD vehicle may handle differently than an ordinary two wheel drive vehicle and it contains some features unique to AWD. For safety purposes as well as to avoid damaging the AWD system, you should keep the following tips in mind.

- An AWD model is better able to climb steeper roads under snowy or slippery conditions than a two wheel drive vehicle. There is little difference in handling, however, during extremely sharp turns or sudden braking. Therefore, when driving down a slope or turning corners, be sure to reduce your speed and maintain an ample distance from other vehicles.
- Always check the cold tire pressure before starting to drive. The recommended tire pressure is provided on the tire placard, which is located under the door latch on the driver's side.
- Frequent driving of an AWD model under hard-driving conditions such as steep hills or dusty roads will necessitate more frequent replacement of the following items than that specified in "Maintenance schedule" ☞11-3.
  - Engine oil
  - Brake fluid
  - Rear differential gear oil
  - Manual transmission oil
- There are some precautions that you must observe when towing your vehicle. For detailed information, refer to "Towing" ☞9-12.

Winter driving

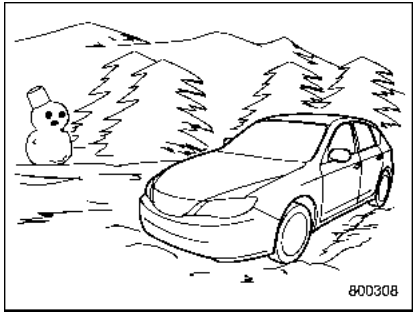

■ Operation during cold weather

Carry some emergency equipment, such as a window scraper, a bag of sand, flares, a small shovel and jumper cables.

Check the battery and cables. Cold temperatures reduce battery capacity. The battery must be in good condition to provide enough power for cold winter starts.

It normally takes longer to start the engine in very cold weather conditions. Use an engine oil of a proper grade and viscosity for cold weather. Using heavy summer oil will make it harder to start the engine.

Keep the door locks from freezing by squirting them with deicer or glycerin.

Forcing a frozen door open may damage or separate the rubber weather strips around the door. If the door is frozen, use hot water to melt the ice, and afterwards thoroughly wipe the water away.

Use a windshield washer fluid that contains an antifreeze solution. Do not use engine antifreeze or other substitutes because they may damage the paint of the vehicle.

SUBARU Windshield Washer Fluid contains 58.5% methyl alcohol and 41.5% surfactant, by volume. Its freezing temperature varies according to how much it is diluted, as indicated in the following table.

Washer Fluid Concentration	Freezing Temperature
30%	**10.4°F (−12°C)**
50%	**−4°F (−20°C)**
100%	**−49°F (−45°C)**

In order to prevent freezing of washer fluid, check the freezing temperatures in the table above when adjusting the fluid concentration to the outside temperature.

If you fill the reservoir tank with a fluid with a different concentration from the one used previously, purge the old fluid from the piping between the reservoir tank and washer nozzles by operating the washer for a certain period of time. Otherwise, if the concentration of the fluid remaining in the piping is too low for the outside temperature, it may freeze and block the nozzles.

⚠ CAUTION

- **Adjust the washer fluid concentration appropriately for the outside temperature. If the concentration is inappropriate, sprayed washer fluid may freeze on the windshield and obstruct your view, and the fluid may freeze in the reservoir tank.**
- **State or local regulations on volatile organic compounds may restrict the use of methanol, a common windshield washer antifreeze additive. Washer fluids containing non-methanol antifreeze agents should be used only if they provide cold weather protection without damaging your vehicle's paint, wiper blades or washer system.**

▼ **Before driving your vehicle**

Before entering the vehicle, remove any snow or ice from your shoes because that could make the pedals slippery and driving dangerous.

While warming up the vehicle before driving, check that the accelerator pedal, brake pedal, and all other controls operate smoothly.

Clear away ice and snow that has accumulated under the fenders to avoid making steering difficult. During severe winter driving, stop when and where it is safe to do so and check under the fenders periodically.

▼ **Parking in cold weather**

Do not use the parking brake when parking for long periods in cold weather since it could freeze in that position. Instead, you should observe the following tips.

1. Place the shift lever in “1” or “R”.
2. Use tire stops under the tires to prevent the vehicle from moving.

When the vehicle is parked in snow or when it snows, raise the wiper blades off the glass to prevent damage to them.

When the vehicle has been left parked after use on roads heavily covered with snow, or has been left parked during a snowstorm, icing may develop on the brake system, which could cause poor braking action. Check for snow or ice buildup on the suspension, disc brakes and brake hoses underneath the vehicle.

If there is caked snow or ice, remove it, being careful not to damage the disc brakes and brake hoses and ABS harness.

⚠ WARNING

Snow can trap dangerous exhaust gases under your vehicle. Keep snow clear of the exhaust pipe and from around your vehicle if you park the vehicle in snow with the engine running.

▼ **Refueling in cold weather**

To help prevent moisture from forming in the fuel system and the risk of its freezing, use of an antifreeze additive in the fuel tank is recommended during cold weather.

Use only additives that are specifically designed for this purpose. When an antifreeze additive is used, its effect lasts longer if the tank is refilled whenever the fuel level reaches half empty.

If your SUBARU is not going to be used for an extended period, it is best to have the fuel tank filled to capacity.

■ Driving on snowy and icy roads

To prevent skidding and slipping, avoid sudden braking, abrupt acceleration, high-speed driving, and sharp turning when driving on snowy or icy roads.

Always maintain ample distance between your vehicle and the vehicle ahead of you to avoid the need for sudden braking.

To supplement the foot brake, use the engine brake effectively to control the vehicle speed. (Shift into a lower gear when necessary.)

Avoid shifting down abruptly. Such behavior can cause the wheels to lock, possibly leading to loss of vehicle control.

An anti-lock brake system (ABS) enhances your vehicle’s braking performance on snowy and icy roads. For information on braking on slippery surfaces, refer to “ABS (Anti-lock Brake System)” ☞7-26 and “Vehicle Dynamics Control system” ☞7-28.

⚠ WARNING

Do not use the cruise control on slippery roads such as snowy or icy roads. This may cause loss of

– CONTINUED –

vehicle control.

⚠ CAUTION

Avoid prolonged continuous driving in snowstorms. Snow will enter the engine's intake system and may hinder the airflow, which could result in engine shutdown or even breakdown.

▼ Wiper operation when snowing

Before driving in cold weather, make sure the wiper blades are not frozen to the windshield or rear window.

If the front wiper blades are frozen to the windshield, use the defroster with the airflow control dial in the " " position and the temperature control dial set for maximum warmth until the wiper blades are completely thawed out. For details, refer to the following section.

- For the manual climate control system, refer to "Defrosting or defogging the windshield" ☞4-5.
- For the automatic climate control system, refer to "Control panel" ☞4-8.

If your vehicle is equipped with a windshield wiper deicer, it is helpful to thaw the windshield wiper blades. Refer to "Defogger and deicer" ☞3-47.

If the rear wiper blade is frozen to the rear window, use the rear window defogger. Refer to "Defogger and deicer" ☞3-47.

When driving in snow, if frozen snow starts to stick on the surface of the windshield despite wiper operation, use the defroster with the airflow control dial in "" and the temperature control dial set for maximum warmth. After the windshield gets warmed enough to melt the frozen snow on it, wash it away using the windshield washer. Refer to "Washer" ☞3-37.

Snow stuck on the wiper arm prevents the wiper from working effectively. If snow is stuck on the wiper arm, pull off the road to a safe place, then remove it. If you stop the vehicle at road side, use the hazard warning flasher to alert other drivers.

We recommend use of non-freezing type wiper blades (winter blades) during the seasons you could have snow and freezing temperatures. Blades of this type give superior wiping performance in snowy conditions. Be sure to use blades that are suitable for your vehicle.

⚠ CAUTION

During high-speed driving, non-freezing type wiper blades may not perform as well as standard wiper blades. If this happens, reduce the vehicle speed.

NOTE

When the season requiring non-freezing type wiper blades is over, replace them with standard wiper blades.

■ Corrosion protection

Refer to "Corrosion protection" ☞10-4.

■ Snow tires

⚠ WARNING

- **When you replacing or installing winter tire(s), all four tires must be the same for following items.**
  (a) Size
  (b) Circumference
  (c) Speed symbol
  (d) Load index
  (e) Construction
  (f) Manufacturer
  (g) Brand (tread pattern)
  (h) Degrees of wear
  For the items (a) to (d), you must

obey the specification that is printed on the tire placard. The tire placard is located on the bottom of driver's door pillar.

If all of four winter tires are not the same for items (a) to (h), there is a possibility that serious mechanical damage could occur to the drive train of your car, and affect the following.

— Ride

— Handling

— Braking

— Speedometer/Odometer calibration

— Clearance between the body and tires

It also may be dangerous and lead to loss of vehicle control, and it can lead to an accident.

- **Do not use a combination of radial, belted bias or bias tires since it may cause dangerous handling characteristics and lead to an accident.**

Your vehicle is equipped with "summer tires" as original equipment, which are inadequate for driving on slippery roads such as on snow-covered or icy roads.

Compared with winter and all-season tires, summer tires give significantly less grip on snowy and icy road surfaces. Therefore, use of winter tires is strongly recommended when driving with such road conditions.

When you choose to install winter tires on your vehicle, be sure to use the correct tire size and type. You must install four winter tires that are of the same size, construction, brand and load range and you should never mix radial, belted bias or bias tires since this may result in dangerous handling characteristics. When you choose a tire, make sure that there is enough clearance between the tire and vehicle body.

Remember to drive with care at all times regardless of the type of tires on your vehicle.

■ Tire chains

⚠ CAUTION

Tire chains cannot be used on your Impreza, WRX and STI because of the lack of clearance between the tires and vehicle body.

■ Rocking the vehicle

If you must rock the vehicle to free it from snow, sand, or mud, depress the accelerator pedal slightly and move the shift lever back and forth between "1" and "R" repeatedly. Do not race the engine. For the best possible traction, avoid spinning the wheels when trying to free the vehicle.

When the road surface is extremely slippery, you can obtain better traction by starting the vehicle with the transmission in 2nd than 1st.

Loading your vehicle

⚠ WARNING

- **Never allow passengers to ride on a folded rear seatback, in the trunk or in the cargo area. Doing so may result in serious injury.**
- **Never stack luggage or other cargo higher than the top of the seatback because it could tumble forward and injure passengers in the event of a sudden stop or accident. Keep luggage or cargo low, as close to the floor as possible.**

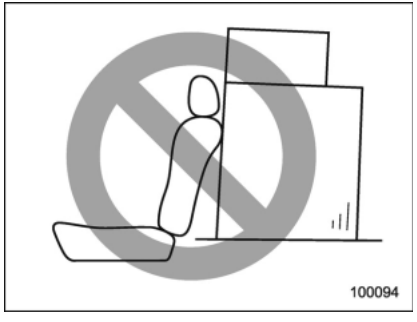

⚠ WARNING

- **When you carry something inside the vehicle, secure it whenever you can to prevent it from being thrown around inside the vehicle during sudden stops, sharp turns or in an accident.**
- **Do not pile heavy loads on the roof. These loads raise the vehicle's center of gravity and make it more prone to tip over.**
- **Secure lengthy items properly to prevent them from shooting forward and causing serious injury during a sudden stop.**
- **Never exceed the maximum load limit. If you do, some parts on your vehicle can break, or it can change the way your vehicle handles. This could result in loss of control and cause personal injury. Also, overloading can shorten the life of your vehicle.**
- **Do not place anything on the rear shelf behind the rear seatback (for 4-door) or the extended cargo area cover (for 5-door). Such items could tumble forward in the event of a sudden stop or a collision. This could cause serious injury.**

⚠ CAUTION

Do not carry spray cans, containers with flammable or corrosive liquids or any other dangerous items inside the vehicle.

NOTE

For better fuel economy, do not carry unneeded cargo.

■ Vehicle capacity weight

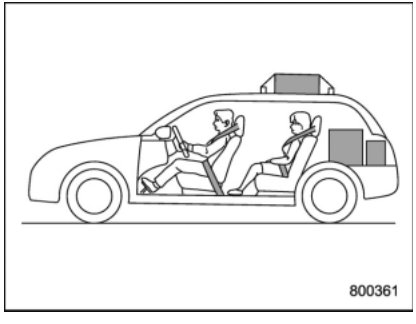

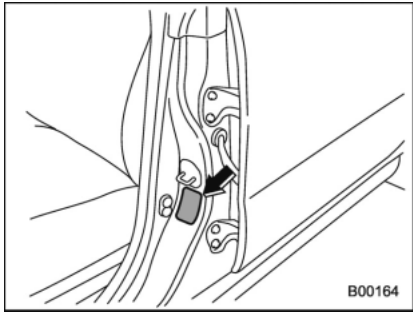

The load capacity of your vehicle is determined by weight, not by available cargo space. The maximum load you can carry in your vehicle is shown on the vehicle placard attached to the driver's side door pillar. It includes the total weight of the driver and all passengers and their belongings, any optional equipment such as a roof rack or bike carrier, etc.

■ GVWR and GAWR (Gross Vehicle Weight Rating and Gross Axle Weight Rating)

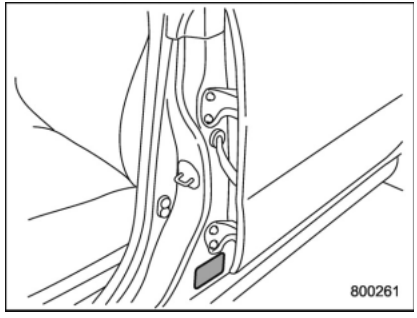

The certification label attached to the driver's side doorjamb shows GVWR (Gross Vehicle Weight Rating) and GAWR (Gross Axle Weight Rating).

The GVW (Gross Vehicle Weight) must never exceed the GVWR. GVW is the combined total of weight of the vehicle, fuel, driver, all passengers, luggage and any optional equipment. Therefore, the GVW changes depending on the situation. The GVWR equals Curb Weight (actual weight of your vehicle – including standard equipment, fluids, emergency tools and spare tire assembly) plus the vehicle capacity weight.

In addition, the total weight applied to each axle (GAW) must never exceed the GAWR. The front and rear GAWs can be adjusted by relocating luggage inside the vehicle.

Even if the total weight of your luggage is lower than the vehicle capacity weight, either front or rear GAW may exceed the GAWR, depending on the distribution of the luggage.

When possible, the load should be evenly distributed throughout the vehicle.

If you carry heavy loads in the vehicle, you should confirm that GVW and front and rear GAWs are within the GVWR and GAWR by putting your vehicle on a vehicle scale, found at a commercial weighing station.

Do not use replacement tires with a lower load range than the originals because they may lower the GVWR and GAWR limitations. Replacement tires with a higher load range than the originals do not increase the GVWR and GAWR limitations.

– CONTINUED –

■ Roof molding and crossbar (if equipped)

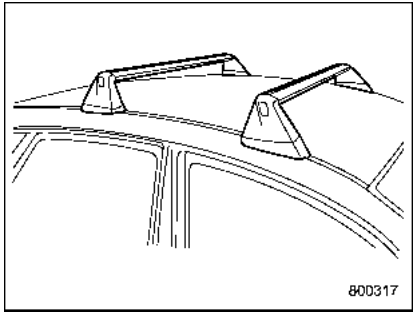

⚠ CAUTION

- **For cargo carrying purposes, the roof molding must be used together with a roof crossbar kit and the appropriate carrying attachment. Otherwise, damage to the roof or paint or a dangerous road hazard due to loss of cargo could result.**
- **When using the roof crossbar kit, make sure that the total weight of the crossbars, carrying attachment and cargo does not exceed the maximum load limit. Overloading may cause damage to the vehicle and create a safety hazard.**

Cargo can be carried after securing the roof crossbar kit to the roof molding and installing the appropriate carrying attachment. When installing the roof crossbar kit, follow the manufacturer's instructions.

When you carry cargo on the roof using the roof crossbar kit and a carrying attachment, never exceed the maximum load limit as explained below. You should also be careful that your vehicle does not exceed the Gross Vehicle Weight Rating (GVWR) and front and rear Gross Axle Weight Rating (GAWR). For information about loading cargo into or onto your vehicle, refer to "Loading your vehicle" ☞8-10. The maximum load limit of the cargo, crossbars and carrying attachment must not exceed **176 lbs (80 kg)**. Place the heaviest load at the bottom, nearest the roof, and evenly distribute the cargo. Always properly secure all cargo.

▼ Installing carrying attachments on the crossbars

When installing any carrying attachment such as a bike carrier, ski carrier, kayak carrier, cargo basket, etc. on the crossbars, follow the manufacturer's instructions and make sure that the attachment is securely fixed to the crossbars. Use only attachments designed specifically for the crossbars. A set of the crossbars is designed to carry loads (cargo and attachment) of not more than **165 lbs (75 kg)**. Before operating the vehicle, make sure that the cargo is properly secured on the attachment.

NOTE

Remember that the vehicle's center of gravity is altered with the weight of the load on the roof, thus affecting the driving characteristics.

Drive carefully. Avoid rapid starts, hard cornering and abrupt stops. Crosswind effects will be increased.

▼ **Removal and installation of the crossbars**

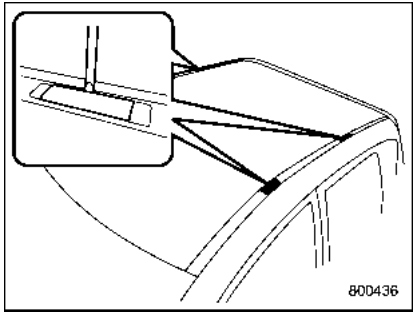

Each of the two roof moldings has two mounting points for crossbars. Each mounting point is fitted with a cover. Use a screwdriver to remove the covers. When installing the crossbars on the roof molding, follow the manufacturer's instructions.

Trailer towing

Your vehicle is neither designed nor intended to be used for trailer towing. Therefore, never tow a trailer with your vehicle.
SUBARU assumes no responsibility for injuries or vehicle damage that may result from trailer towing, from any trailer towing equipment or from any errors or omissions in the instructions accompanying such equipment. SUBARU warranties do not apply to vehicle damage or malfunction caused by trailer towing.

If you park your vehicle in case of an emergency 9-2
Temporary spare tire 9-2
Maintenance tools 9-3
Tool bag 9-4
Under the rear floor 9-4
Flat tires 9-5
Changing a flat tire 9-5
Tire pressure monitoring system (TPMS) (U.S.-spec. models) 9-8
Jump starting 9-9
How to jump start 9-10
Engine overheating 9-12
If steam is coming from the engine compartment 9-12
If no steam is coming from the engine compartment 9-12
Towing 9-12
Towing and tie-down hooks 9-13
Using a flat-bed truck 9-15
Towing with all wheels on the ground 9-15
Rear gate – if the rear gate cannot be unlocked 9-16

If you park your vehicle in case of an emergency

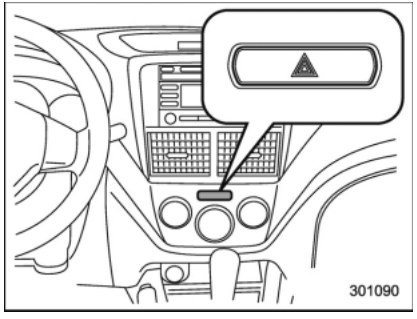

The hazard warning flasher should be used in day or night to warn other drivers when you have to park your vehicle under emergency conditions.

Avoid stopping on the road. It is best to safely pull off the road if a problem occurs.

The hazard warning flasher can be activated regardless of the ignition switch position.

Turn on the hazard warning by pushing the hazard warning flasher switch. Turn it off by pushing the switch again.

NOTE

When the hazard warning flasher is on, the turn signals do not work.

Temporary spare tire

⚠ WARNING

When a spare tire is mounted or a wheel rim is replaced without the original pressure sensor/transmitter being transferred, the low tire pressure warning light will illuminate steadily after blinking for approximately one minute. This indicates the tire pressure monitoring system (TPMS) is unable to monitor all four road wheels. Contact your SUBARU dealer as soon as possible for tire and sensor replacement and/or system resetting.

⚠ CAUTION

Never use any temporary spare tire other than the original. Using other sizes may result in severe mechanical damage to the drive train of your vehicle.

The temporary spare tire is smaller and lighter than a conventional tire and is designed for emergency use only. Remove the temporary spare tire and reinstall the conventional tire as soon as

possible because the spare tire is designed only for temporary use.

Check the inflation pressure of the temporary spare tire periodically to keep the tire ready for use. The correct pressure is **60 psi (420 kPa, 4.2 kg/cm^2)**.

When using the temporary spare tire, note the following.

- Do not exceed 50 mph (80 km/h).
- Do not put a tire chain on the temporary spare tire. Because of the smaller tire size, a tire chain will not fit properly.
- Do not use two or more temporary spare tires at the same time.
- Do not drive over obstacles. This tire has a smaller diameter, so road clearance is reduced.

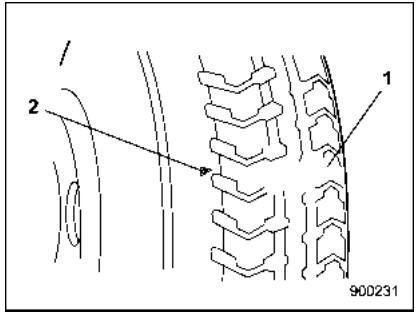

1) Tread wear indicator bar
2) Indicator location mark

- When the wear indicator appears on the tread, replace the tire.
- The temporary spare tire must be used only on a rear wheel. If a front wheel tire gets punctured, replace the wheel with a rear wheel and install the temporary spare tire in place of the removed rear wheel.

Maintenance tools

Your vehicle is equipped with the following maintenance tools.

- Jack
- Jack handle
- Screwdriver
- Towing hook (eye bolt)
- Wheel nut wrench

– CONTINUED –

■ Tool bag

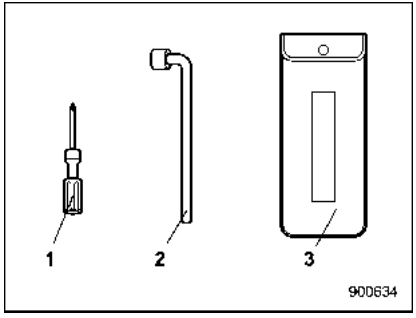

1) Screwdriver
2) Wheel nut wrench
3) Tool bag

The screwdriver and wheel nut wrench are stored in the tool bag.

■ Under the rear floor

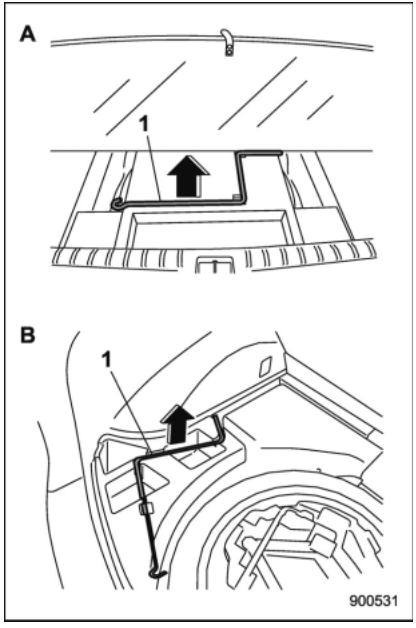

1) Jack handle
A) 4-door models
B) 5-door models

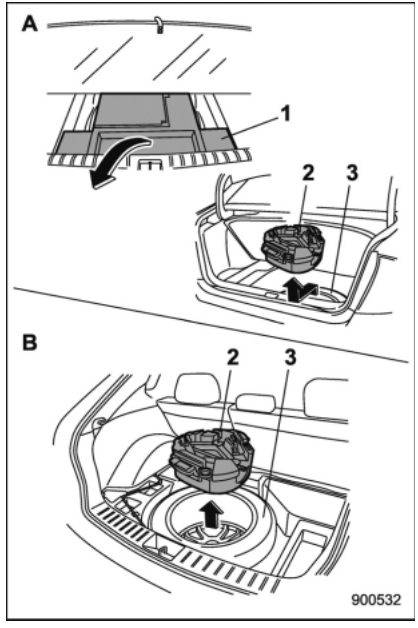

1) Under-floor storage compartment (if equipped) (Refer to “Under-floor storage compartment” ☞6-14.)
2) Tool bucket
3) Spare tire
A) 4-door models
B) 5-door models

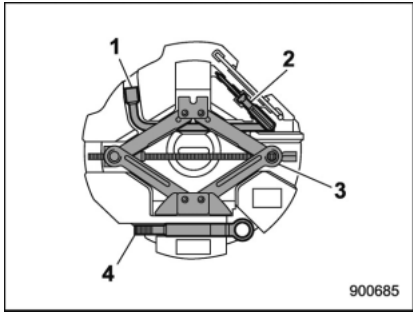

1) Wheel nut wrench
2) Screwdriver
3) Jack
4) Towing hook (eye bolt)

The jack handle is stored under the floor of the trunk (4-door) or the cargo area (5-door). The jack and towing hook are stored in the tool bucket that is located in the recess of the spare tire wheel.

Also, the tools in the tool bag can be stored in the tool bucket as illustrated.

For how to use the jack, refer to “Flat tires” ☞9-5.

Flat tires

If you have a flat tire while driving, never brake suddenly; keep driving straight ahead while gradually reducing speed. Then slowly pull off the road to a safe place.

■ Changing a flat tire

⚠ WARNING

- **Do not jack up the vehicle on an incline or a loose road surface. The jack can come out of the jacking point or sink into the ground and this can result in a severe accident.**
- **Use only the jack provided with your vehicle. The jack supplied with the vehicle is designed only for changing a tire. Never get under the vehicle while supporting the vehicle with this jack.**
- **Always turn off the engine before raising the flat tire off the ground using the jack. Never swing or push the vehicle supported with the jack. The jack can come out of the jacking point due to a jolt and this can result in a severe accident.**

1. Park on a hard, level surface, whenever possible, then stop the engine.
2. Set the parking brake securely and shift the shift lever in reverse.
3. Turn on the hazard warning flasher and have everyone get out of the vehicle.

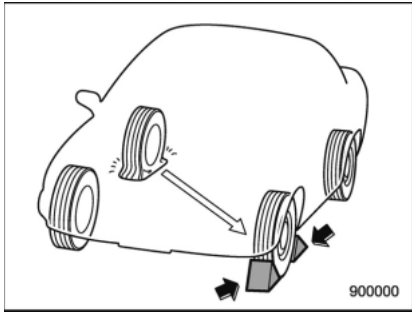

4. Put wheel blocks at the front and rear of the tire diagonally opposite the flat tire.
5. Take out the jack, jack handle and wheel nut wrench.

– CONTINUED –

The tools and the spare tire are stored under the floor of the trunk (4-door) or the cargo area (5-door). Refer to “Maintenance tools” ☞9-3.

NOTE

Make sure that the jack is well lubricated before using it.

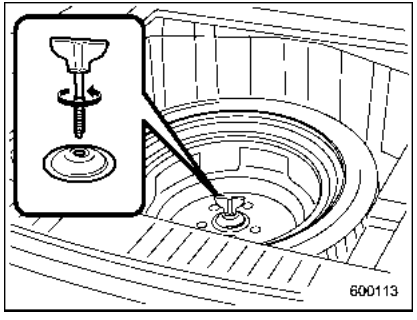

6. Take out the tool bucket and turn the attaching bolt counterclockwise, then take the spare tire out.

NOTE

If the spare tire provided in your vehicle is a temporary spare tire, carefully read “Temporary spare tire” ☞9-2 and strictly follow the instructions.

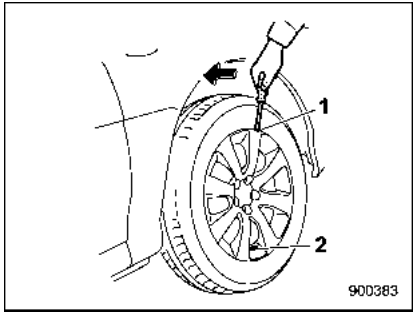

1) Notch
2) Valve hole

7. If your vehicle has wheel covers, insert a flat-head screwdriver into the notch on the opposite side of the valve hole and pry the wheel cover to remove it.

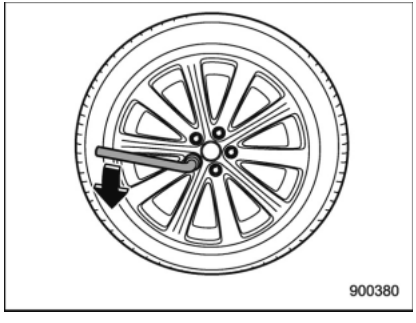

8. Loosen the wheel nuts using the wheel nut wrench but do not remove the nuts.

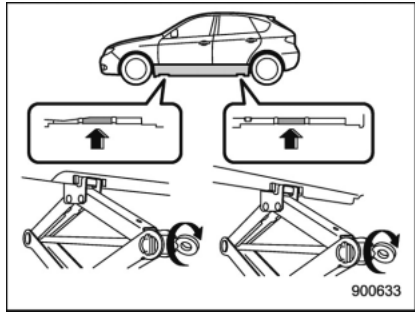

Jack-up points

9. Place the jack under the side sill at the front or rear jack-up point closest to the flat tire.

Turn the jackscrew by hand until the jack head engages firmly into the jack-up point.

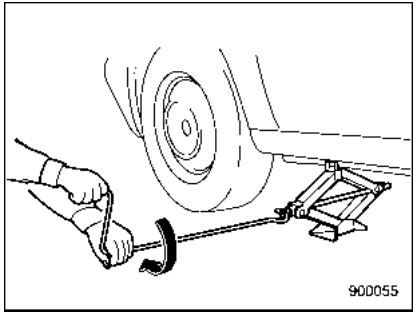

10. Insert the jack handle into the jack-screw, and turn the handle until the tire clears the ground. Do not raise the vehicle higher than necessary.

11. Remove the wheel nuts and the flat tire.

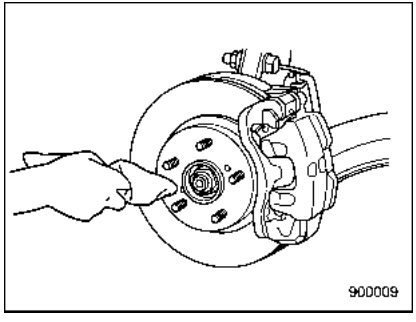

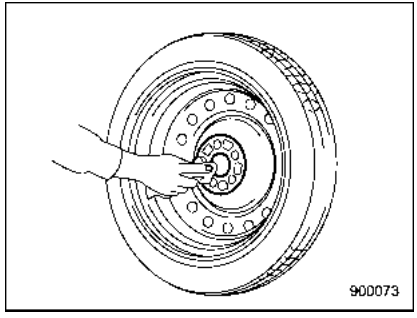

12. Before putting the spare tire on, clean the mounting surface of the wheel and hub with a cloth.

13. Put on the spare tire. Replace the wheel nuts. Tighten them by hand.

⚠ WARNING

Do not use oil or grease on the wheel studs or nuts when the spare tire is installed. This could cause the nuts to become loose and lead to an accident.

14. Turn the jack handle counterclockwise to lower the vehicle.

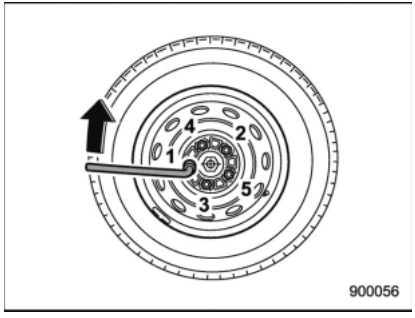

15. Use the wheel nut wrench to securely tighten the wheel nuts to the specified torque, following the tightening order in the illustration.

For the wheel nut tightening torque, refer to “Tires” ☞12-9. Never use your foot on the wheel nut wrench or a pipe extension on the wrench because you may exceed the specified torque. Have the wheel nut torque checked at the nearest automotive service facility.

– CONTINUED –

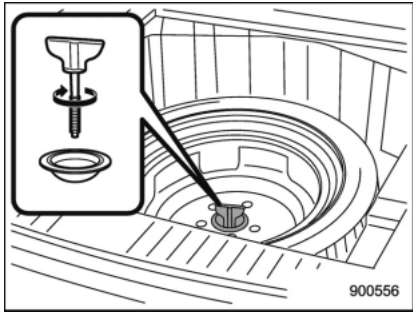

16. Store the flat tire in the spare tire compartment. Put in the spacer and tighten the attaching bolt firmly.

Also store the jack, jack handle and wheel nut wrench in their storage locations.

⚠ WARNING

Never place a tire or tire changing tools in the passenger compartment after changing wheels. In a sudden stop or collision, loose equipment could strike occupants and cause injury. Store the tire and all tools in the proper place.

■ Tire pressure monitoring system (TPMS) (U.S.-spec. models)

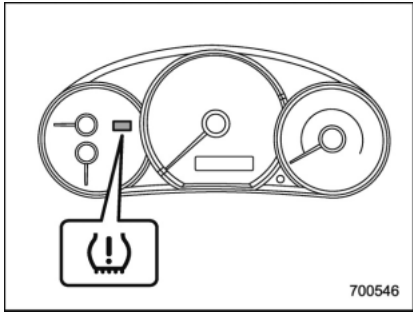

The tire pressure monitoring system provides the driver with the warning message indicated by sending a signal from a sensor that is installed in each wheel when tire pressure is severely low.

The tire pressure monitoring system will activate only when the vehicle is driven. Also, this system may not react immediately to a sudden drop in tire pressure (for example, a blow-out caused running over a sharp object).

⚠ WARNING

If the low tire pressure warning light illuminates while driving, never brake suddenly and keep driving straight ahead while gradually reducing speed. Then slowly pull off the road to a safe place. Otherwise an accident involving serious vehicle damage and serious personal injury could occur.

Check the pressure for all four tires and adjust the pressure to the COLD tire pressure shown on the vehicle placard on the door pillar on the driver's side. If this light still illuminates while driving after adjusting the tire pressure, a tire may have significant damage and a fast leak that causes the tire to lose air rapidly. If you have a flat tire, replace it with a spare tire as soon as possible.

When a spare tire is mounted or a wheel rim is replaced without the original pressure sensor/transmitter being transferred, the low tire pressure warning light will illuminate steadily after blinking for approximately one minute. This indicates the TPMS is unable to monitor all four road wheels. Contact your SUBARU dealer as soon as possible for tire and sensor replacement and/or system resetting.

Do not inject any tire liquid or

aerosol tire sealant into the tires, as this may cause a malfunction of the tire pressure sensors.

If the light illuminates steadily after blinking for approximately one minute, promptly contact a SUBARU dealer to have the system inspected.

Jump starting

⚠ WARNING

- **Battery fluid is SULFURIC ACID. Do not let it come in contact with the eyes, skin, clothing or the vehicle.**

  If battery fluid gets on you, thoroughly flush the exposed area with water immediately. Get medical help if the fluid has entered your eyes.

  If battery fluid is accidentally swallowed, immediately drink a large amount of milk or water, and obtain immediate medical help.

  Keep everyone including children away from the battery.
- **The gas generated by a battery explodes if a flame or spark is brought near it. Do not smoke or light a match while jump starting.**
- **Never attempt jump starting if the discharged battery is frozen. It could cause the battery to burst or explode.**
- **Whenever working on or around a battery, always wear suitable eye protectors, and remove metal objects such as rings, bands or other metal jewelry.**
- **Be sure the jumper cables and clamps on them do not have loose or missing insulation.**

  Do not jump start unless cables in suitable condition are available.
- **A running engine can be dangerous. Keep your fingers, hands, clothing, hair and tools away from the cooling fan, belts and any other moving engine parts. Removing rings, watches and ties is advisable.**
- **Jump starting is dangerous if it done incorrectly. If you are unsure about the proper procedure for jump starting, consult a competent mechanic.**

When your vehicle does not start due to a run down (discharged) battery, the vehicle may be jump started by connecting your battery to another battery (called the booster battery) with jumper cables.

– CONTINUED –

■ How to jump start

1. Make sure the booster battery is 12 volts and the negative terminal is grounded.
2. If the booster battery is in another vehicle, do not let the two vehicles touch.
3. Turn off all unnecessary lights and accessories.
4. Connect the jumper cables exactly in the sequence illustrated.

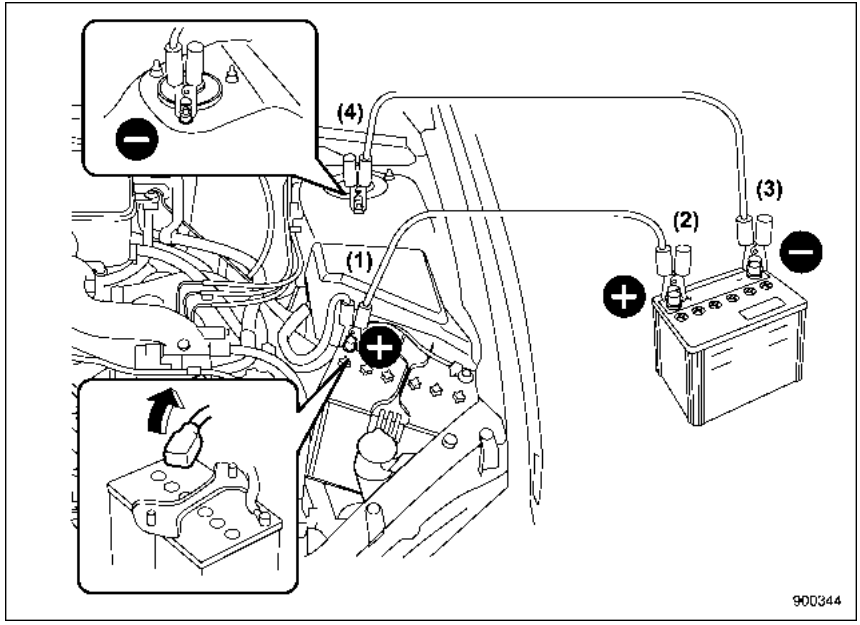

(1) Connect one jumper cable to the positive (+) terminal on the discharged battery.
(2) Connect the other end of the jumper cable to the positive (+) terminal of the booster battery.
(3) Connect one end of the other cable to the negative (−) terminal of the booster battery.
(4) Connect the other end of the cable to the strut mounting nut of the vehicle with the discharged battery.

Make sure that the cables are not near any moving parts and that the cable clamps are not in contact with any other metal.

5. Start the engine of the vehicle with the booster battery and run it at moderate speed. Then start the engine of the vehicle that has the discharged battery.

6. When finished, carefully disconnect the cables in exactly the reverse order.

Engine overheating

⚠ WARNING

Never attempt to remove the radiator cap until the engine has been shut off and has fully cooled down. When the engine is hot, the coolant is under pressure. Removing the cap while the engine is still hot could release a spray of boiling hot coolant, which could burn you very seriously.

If the engine overheats, safely pull off the road and stop the vehicle in a safe place.

■ If steam is coming from the engine compartment

Turn off the engine and get everyone away from the vehicle until it cools down.

■ If no steam is coming from the engine compartment

NOTE

For details about how to check the coolant level or how to add coolant, refer to "Engine coolant" ☞11-12.

1. Keep the engine running at idling speed.
2. Open the hood to ventilate the engine compartment. Refer to "Engine hood" ☞11-5.

Confirm that the cooling fan is turning. If the fan is not turning, immediately turn off the engine and contact your authorized dealer for repair.

3. After the engine coolant temperature has dropped, turn off the engine.

If temperature gauge stays in the overheated zone, turn off the engine. Refer to "Temperature gauge" ☞3-10.

4. After the engine has fully cooled down, check the coolant level in the reserve tank.

If the coolant level is below the "LOW" mark, add coolant up to the "FULL" mark.

5. If there is no coolant in the reserve tank, add coolant to the reserve tank. Then remove the radiator cap and fill the radiator with coolant.

If you remove the radiator cap from a hot radiator, first wrap a thick cloth around the radiator cap, then turn the cap counterclockwise slowly without pressing down until it stops. Release the pressure from the radiator. After the pressure has been fully released, remove the cap by pressing down and turning it.

Towing

If towing is necessary, it is best done by your SUBARU dealer or a commercial towing service. Observe the following procedures for safety.

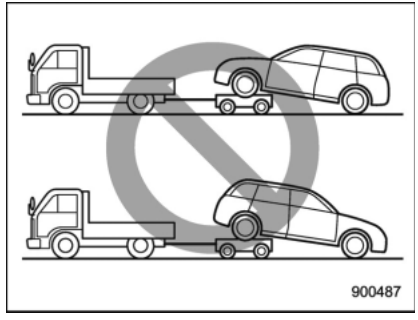

⚠ WARNING

Never tow AWD models with the front wheels raised off the ground while the rear wheels are on the ground, or with the rear wheels raised off the ground while the front wheels are on the ground. This will cause the vehicle to spin away due to the operation or deterioration of the center differential.

■ Towing and tie-down hooks

The towing hooks should be used only in an emergency (e.g., to free a stuck vehicle from mud, sand or snow).

⚠ CAUTION

- **Use only the specified towing hook and tie-down hook. Never use suspension parts or other parts of the body for towing or tie-down purposes.**
- **To prevent deformation to the front bumper and the towing hook, do not apply excessive lateral load to the towing hook.**

Front towing hook:

1. Take the towing hook out of the tool bucket and take the screwdriver out of the tool bag. Take the jack handle out of the cargo area.

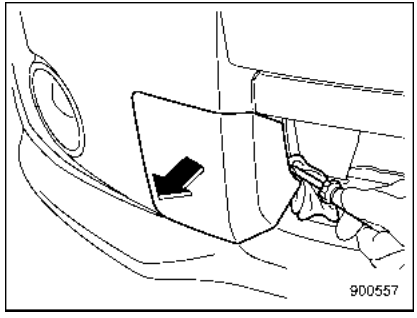

2. Cover the tip of a flat-head screwdriver with vinyl tape or cloth so that it will not scratch the bumper. Insert the flat-head screwdriver into the cutout of the cover and pry open the cover.

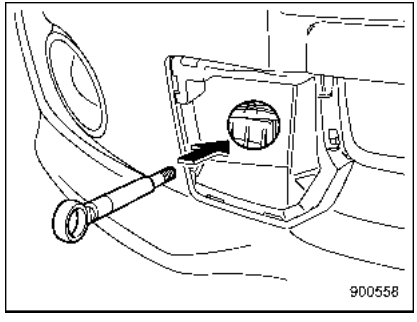

3. Screw the towing hook into the threaded hole until its threads can no longer be seen.

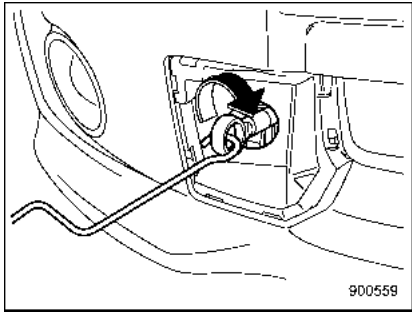

4. Tighten the towing hook securely using the jack handle.

After towing, remove the towing hook from the vehicle and stow it in the tool bucket. Fit the towing hook cover on the bumper.

⚠ WARNING

- **Do not use the towing hook except when towing your vehicle.**
- **Be sure to remove the towing hook after towing. Leaving the towing hook mounted on the vehicle could interfere with proper operation of the SRS airbag system in a frontal collision.**

– CONTINUED –

Rear towing hook:

1. Take the towing hook out of the tool bucket and take the screwdriver out of the tool bag. Take the jack handle out of the trunk (4-door) or cargo area (5-door).

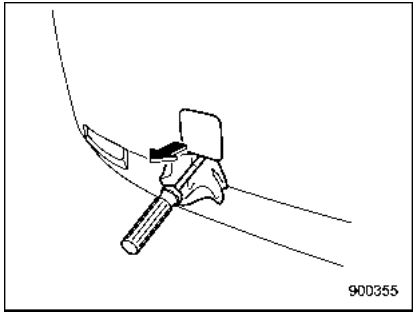

2. Pry off the cover on the rear bumper using a screwdriver, and you will find a threaded hole for attaching the towing hook.

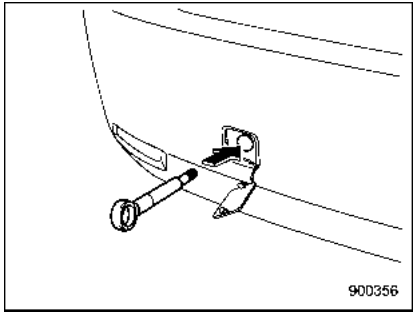

3. Screw the towing hook into the thread hole until its thread can no longer be seen.

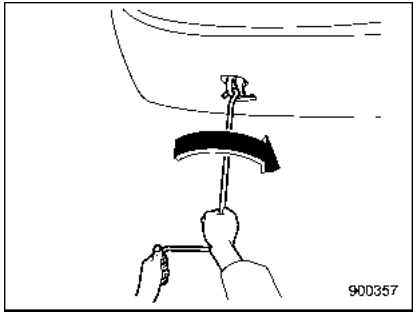

4. Tighten the towing hook securely using the jack handle.

After towing, remove the towing hook from the vehicle and stow it in the tool bucket. Fit the towing hook cover on the bumper.

⚠ WARNING

Do not use the towing hook except when towing your vehicle.

Front tie-down hooks:

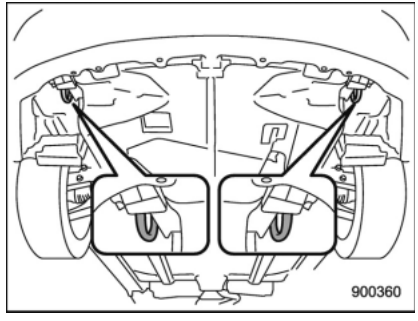

The front tie-down hooks are located between each of the front tires and the front bumper.

Rear tie-down hooks:

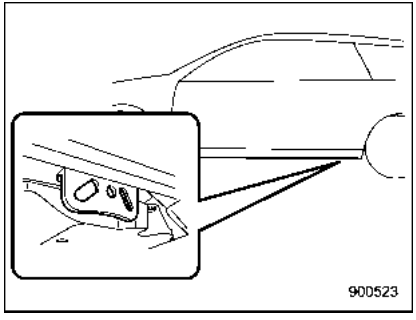

The rear tie-down hooks are located near each of the jack-up reinforcements.

⚠ WARNING

Use the rear tie-down hooks only for downward anchoring. If they are used to anchor the vehicle in any other direction, cables may slip off the hooks, possibly causing a dangerous situation.

■ Using a flat-bed truck

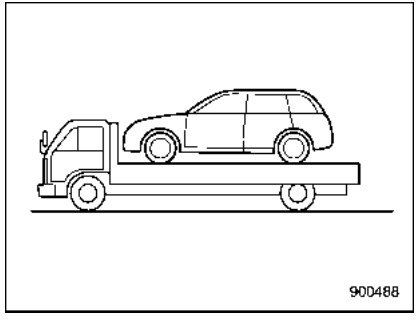

This is the best way to transport your vehicle. Use the following procedures to ensure safe transportation.

1. Shift the shift lever into the “1st” position.
2. Pull up the parking brake lever firmly.
3. Secure the vehicle onto the carrier properly with safety chains. Each safety chain should be equally tightened and care must be taken not to pull the chains so tightly that the suspension bottoms out.

⚠ CAUTION

If your vehicle has a front underspoiler and rear underspoiler (both optional), be careful not to scrape them when placing the vehicle on the carrier and when removing the vehicle from the carrier.

■ Towing with all wheels on the ground

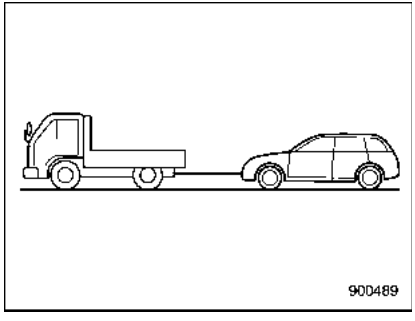

1. Release the parking brake and put the transmission in the neutral position.
2. The ignition switch should be in the “Acc” position while the vehicle is being towed.
3. Take up slack in the towline slowly to prevent damage to the vehicle.

– CONTINUED –

⚠ WARNING

- **Never turn the ignition switch to the "LOCK" position while the vehicle is being towed because the steering wheel and the direction of the wheels will be locked.**
- **Remember that the brake booster and power steering do not function when the engine is not running. Because the engine is turned off, it will take greater effort to operate the brake pedal and steering wheel.**

⚠ CAUTION

- **If transmission failure occurs, transport your vehicle on a flat-bed truck.**
- **Do not run the engine while being towed using this method. Transmission damage could result if the vehicle is towed with the engine running.**

Rear gate – if the rear gate cannot be unlocked

In the event that you cannot open the rear gate by operating the rear gate opener button, you can open it from inside the cargo area.

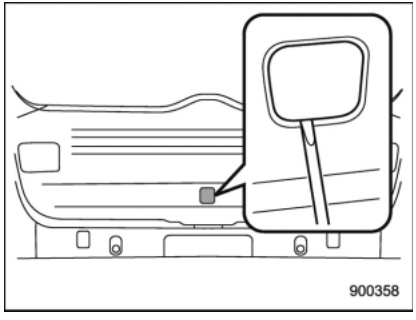

1. Remove the access cover at the bottom-center of the rear gate trim.
2. Locate the rear gate open lever behind the rear gate trim panel.

⚠ CAUTION

Never operate the rear gate open lever with fingers because doing so may cause an injury. Always use a flat-head screwdriver or a similar tool.

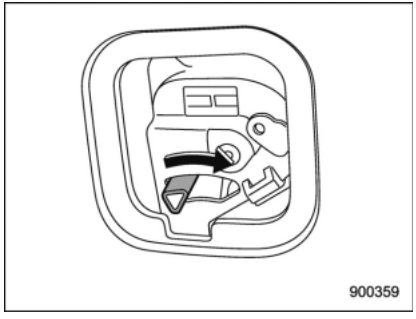

3. Slide the lever to the right position using a flat-head screwdriver to open the rear gate.

Exterior care 10-2
- Washing 10-2
- Waxing and polishing 10-3
- Cleaning aluminum wheels 10-3

Corrosion protection 10-4
- Most common causes of corrosion 10-4
- To help prevent corrosion 10-4

Cleaning the interior 10-5
- Seat fabric 10-5
- Leather seat materials 10-5
- Synthetic leather upholstery 10-5
- Climate control panel, audio panel, instrument panel, console panel, and switches 10-5
- Navigation monitor (if equipped) 10-6

Exterior care

■ Washing

⚠ CAUTION

- **When washing the vehicle, the brakes may get wet. As a result, the brake stopping distance will be longer. To dry the brakes, drive the vehicle at a safe speed while lightly depressing the brake pedal to heat up the brakes.**
- **Do not wash the engine compartment and area adjacent to it. If water enters the engine air intake, electrical parts or the power steering fluid reservoir, it will cause engine trouble or a malfunction of power steering.**
- **Do not use any organic solvents when washing the surface of the bulb assembly cover. However, if a detergent with organic solvents is used to wash the cover surface, completely rinse off the detergent with water. Otherwise, the cover surface may be damaged.**
- **For 5-door models, since your vehicle is equipped with a rear wiper, automatic car-wash brushes could become tangled around it, damaging the wiper arm and other components. Ask the automatic car-wash operator not to let the brushes touch the wiper arm or to fix the wiper arm on the rear window glass with adhesive tape before operating the machine.**

NOTE

When having your vehicle washed in an automatic car wash, make sure beforehand that the car wash is of suitable type.

The best way to preserve your vehicle's beauty is frequent washing. Wash the vehicle at least once a month to avoid contamination by road grime.

Wash dirt off with a wet sponge and plenty of lukewarm or cold water. Do not wash the vehicle with hot water and in direct sunlight.

Salt, chemicals, insects, tar, soot, tree sap, and bird droppings should be washed off by using a light detergent, as required. If you use a light detergent, make certain that it is a neutral detergent. Do not use strong soap or chemical detergents. All cleaning agents should be promptly flushed from the surface and not allowed to dry there. Rinse the vehicle thoroughly with plenty of lukewarm water. Wipe the remaining water off with a chamois or soft cloth.

▼ Washing the underbody

Chemicals, salts and gravel used for deicing road surfaces are extremely corrosive, accelerating the corrosion of underbody components, such as the exhaust system, fuel and brake lines, brake cables, floor pan and fenders, and suspension.

Thoroughly flush the underbody and inside of the fenders with lukewarm or cold water at frequent intervals to reduce the harmful effects of such agents.

Mud and sand adhering to the underbody components may accelerate their corrosion.

After driving off-road or on muddy or sandy roads, wash the mud and sand off the underbody. Carefully flush the suspension and axle parts, as they are particularly prone to mud and sand buildup. Do not use a sharp-edged tool to remove caked mud.

⚠ CAUTION

- **Be careful not to damage brake hoses, sensor harnesses, and other parts when washing suspension components.**
- **Be careful not to flush the engine bottom for a long time. It may cause damage of some electrical parts.**

▼ Using a warm water washer

- Keep a good distance of 12 in (30 cm) or more between the washer nozzle and the vehicle.
- Do not wash the same area continuously.
- If a stain will not come out easily, wash by hand. Some warm water washers are of the high temperature, high pressure type, and they can damage or deform the resin parts such as moldings, or cause water to leak into the vehicle.

■ Waxing and polishing

Always wash and dry the vehicle before waxing and polishing.

Use a good quality polish and wax and apply them according to the manufacturer's instructions. Wax or polish when the painted surface is cool.

Be sure to polish and wax the chrome trim, as well as the painted surfaces. Loss of wax on a painted surface leads to loss of the original luster and also quickens the deterioration of the surface. It is recommended that a coat of wax be applied at least once a month, or whenever the surface no longer repels water.

If the appearance of the paint has diminished to the point where the luster or tone cannot be restored, lightly polish the surface with a fine-grained compound. Never polish just the affected area, but include the surrounding area as well. Always polish in only one direction. A No. 2000 grain compound is recommended. Never use a coarse-grained compound. Coarse-grained compounds have a smaller grain-size number and could damage the paint. After polishing with a compound, coat with wax to restore the original luster. Frequent polishing with a compound or an incorrect polishing technique will result in removing the paint layer and exposing the undercoat. When in doubt, it is always best to contact your SUBARU dealer or an auto paint specialist.

⚠ CAUTION

Do not use any agents with organic solvents on the surface of the bulb assembly cover. However, if a polish or wax with organic solvents is applied to the cover surface, completely wipe off the polish or wax. Otherwise, the cover surface may be damaged.

NOTE

Be careful not to block the windshield washer nozzles with wax when waxing the vehicle.

■ Cleaning aluminum wheels

- Promptly wipe the aluminum wheels clean of any kind of grime or agent. If dirt is left on too long, it may be difficult to clean off.
- Do not use soap containing grit to clean the wheels. Be sure to use a neutral cleaning agent, and later rinse thoroughly with water. Do not clean the wheels with a stiff brush or expose them to a high-speed washing device.
- Clean the vehicle (including the aluminum wheels) with water as soon as possible when it has been splashed with sea water, exposed to sea breezes, or driven on roads treated with salt or other agents.

Corrosion protection

Your SUBARU has been designed and built to resist corrosion. Special materials and protective finishes have been used on most parts of the vehicle to help maintain fine appearance, strength, and reliable operation.

■ Most common causes of corrosion

The most common causes of corrosion are:

1. The accumulation of moisture retaining dirt and debris in body panel sections, cavities, and other areas.
2. Damage to paint and other protective coatings caused by gravel and stone chips or minor accidents.

Corrosion is accelerated on the vehicle when:

1. It is exposed to road salt or dust control chemicals, or used in coastal areas where there is more salt in the air, or in areas where there is considerable industrial pollution.
2. It is driven in areas of high humidity, especially when temperatures range just above freezing.
3. Dampness in certain parts of the vehicle remains for a long time, even though other parts of the vehicle may be dry.
4. High temperatures will cause corrosion to parts of the vehicle which cannot dry quickly due to lack of proper ventilation.

■ To help prevent corrosion

Wash the vehicle regularly to prevent corrosion of the body and suspension components. Also, wash the vehicle promptly after driving on any of the following surfaces.

- roads that have been salted to prevent them from freezing in winter
- mud, sand, or gravel
- coastal roads

After the winter has ended, it is recommended that the underbody be given a very thorough washing.

Before the beginning of winter, check the condition of underbody components, such as the exhaust system, fuel and brake lines, brake cables, suspension, steering system, floor pan, and fenders. If any of them are found to be rusted, they should be given an appropriate rust prevention treatment or should be replaced. Contact your SUBARU dealer to perform this kind of maintenance and treatment if you need assistance.

Repair chips and scratches in the paint as soon as you find them.

Check the interior of the vehicle for water and dirt accumulation under the floor mats because that could cause corrosion. Occasionally check under the mats to make sure the area is dry.

Keep your garage dry. Do not park your vehicle in a damp, poorly ventilated garage. In such a garage, corrosion can be caused by dampness. If you wash the vehicle in the garage or put the vehicle into the garage when wet or covered with snow, that can cause dampness.

If your vehicle is operated in cold weather and/or in areas where road salts and other corrosive materials are used, the door hinges and locks, trunk lid lock, and hood latch should be inspected and lubricated periodically.

Cleaning the interior

Use a soft, damp cloth to clean the climate control panel, audio equipment, instrument panel, center console, combination meter panel, and switches. (Do not use organic solvents.)

■ Seat fabric

Remove loose dirt, dust or debris with a vacuum cleaner. If the dirt is caked on the fabric or hard to remove with a vacuum cleaner, use a soft brush then vacuum it.

Wipe the fabric surface with a tightly wrung cloth and dry the seat fabric thoroughly. If the fabric is still dirty, wipe using a solution of mild soap and lukewarm water then dry thoroughly.

If the stain does not come out, try a commercially-available fabric cleaner. Use the cleaner on a hidden place and make sure it does not affect the fabric adversely. Use the cleaner according to its instructions.

NOTE

When cleaning the seat, do not use benzine, paint thinner, or any similar materials.

■ Leather seat materials

The leather used by SUBARU is a high quality natural product which will retain its distinctive appearance and feel for many years with proper care.

Allowing dust or road dirt to build up on the surface can cause the material to become brittle and to wear prematurely. Regular cleaning with a soft, moist, natural fiber cloth should be performed monthly, taking care not to soak the leather or allow water to penetrate the stitched seams.

A mild detergent suitable for cleaning woolen fabrics may be used to remove difficult dirt spots, rubbing with a soft, dry cloth afterwards to restore the luster. If your SUBARU is to be parked for a long time in bright sunlight, it is recommended that the seats and head restraints be covered, or the windows shaded, to prevent fading or shrinkage.

Minor surface blemishes or bald patches may be treated with a commercial leather spray lacquer. You will discover that each leather seat section will develop soft folds or wrinkles, which is characteristic of genuine leather.

■ Synthetic leather upholstery

The synthetic leather material used on the SUBARU may be cleaned using mild soap or detergent and water, after first vacuuming or brushing away loose dirt. Allow the soap to soak in for a few minutes and wipe off with a clean, damp cloth. Commercial foam-type cleaners suitable for synthetic leather materials may be used when necessary.

NOTE

Strong cleaning agents such as solvents, paint thinners, window cleaner or gasoline must never be used on leather or synthetic interior materials.

■ Climate control panel, audio panel, instrument panel, console panel, and switches

Use a soft, damp cloth to clean the climate control panel, audio equipment, instrument panel, center console, combination meter panel, and switches.

⚠ CAUTION

- **Do not use organic solvents such as paint thinners or fuel, or strong cleaning agents that contain those solvents.**

– CONTINUED –

- **Do not use chemical solvents that contain silicone on the vehicle audio system, electrical components of the air-conditioner or any switches. If silicone adheres to these parts, it may cause damage to electrical components.**

■ Navigation monitor (if equipped)

To clean the navigation monitor, wipe it with a silicone cloth or with a soft cloth. If the navigation monitor is extremely dirty, clean it with a soft cloth moistened with neutral detergent then carefully wipe off any remaining detergent.

NOTE

- **Do not spray neutral detergent directly onto the monitor. Doing so could damage the monitor's components.**
- **Do not wipe the monitor with a hard cloth. Doing so could scratch the monitor.**
- **Do not use cleaning fluid that contains thinner, gasoline, or any other volatile substance. Such cleaning fluid could erase the lettering on the switches at the bottom of the monitor.**

Maintenance schedule 11-3
Maintenance precautions..... 11-3
Before checking or servicing in the engine compartment..... 11-4
When checking or servicing in the engine compartment..... 11-4
When checking or servicing in the engine compartment while the engine is running..... 11-5
Engine hood 11-5
Engine compartment overview..... 11-6
Turbo models except STI..... 11-6
STI..... 11-7
Engine oil..... 11-8
Checking the oil level..... 11-8
Changing the oil and oil filter..... 11-9
Recommended grade and viscosity 11-10
Synthetic oil..... 11-10
Cooling system 11-11
Cooling fan, hose and connections..... 11-11
Engine coolant..... 11-12
Air cleaner element..... 11-13
Replacing the air cleaner element..... 11-13
Spark plugs 11-14
Recommended spark plugs 11-14
Drive belts 11-15
Manual transmission oil 11-16
Checking the oil level..... 11-16
Recommended grade and viscosity 11-16
Rear differential gear oil 11-17
Recommended grade and viscosity 11-17
Power steering fluid 11-17
Checking the fluid level..... 11-17
Recommended fluid..... 11-18
Brake fluid..... 11-18
Checking the fluid level..... 11-18
Recommended brake fluid 11-19
Clutch fluid..... 11-19
Checking the fluid level..... 11-19
Recommended clutch fluid..... 11-20
Brake booster 11-20
Brake pedal..... 11-21
Checking the brake pedal free play 11-21
Checking the brake pedal reserve distance..... 11-21
Clutch pedal..... 11-21
Checking the clutch function..... 11-21
Checking the clutch pedal free play..... 11-22
Hill start assist system..... 11-22
Replacement of brake pad and lining 11-22
Breaking-in of new brake pads and linings 11-23
Parking brake stroke 11-23
Tires and wheels..... 11-24
Types of tires..... 11-24
Tire pressure monitoring system (TPMS) (if equipped) 11-24
Tire inspection..... 11-25
Tire pressures and wear 11-26
Wheel balance 11-28
Wear indicators 11-28
Tire rotation direction mark..... 11-29
Tire rotation..... 11-29

Tire replacement 11-29
Wheel replacement 11-30
Aluminum wheels 11-31
Windshield washer fluid 11-31
Replacement of wiper blades 11-32
Windshield wiper blade assembly 11-33
Windshield wiper blade rubber (type A and type B) 11-34
Rear window wiper blade assembly (5-door models) 11-35
Rear window wiper blade rubber (5-door models) 11-35
Battery 11-37
Fuses 11-38
Installation of accessories 11-39
Replacing bulbs 11-39
Headlights (models with HID headlights) 11-39
Headlights (models without HID headlights) 11-40
Front turn signal light 11-42
Front fog light (if equipped) 11-42
Rear combination lights 11-43
Backup light (5-door) 11-45
License plate light 11-46
Map light 11-46
Dome light and cargo area light 11-47
Trunk light 11-47
High-mounted stop light (4-door) 11-48
Other bulbs 11-48

Maintenance schedule

The scheduled maintenance items required to be serviced at regular intervals are shown in the “Warranty and Maintenance Booklet”.

For details of your maintenance schedule, read the separate “Warranty and Maintenance Booklet”.

Maintenance precautions

When maintenance and service are required, it is recommended that all work be done by an authorized SUBARU dealer.

If you perform maintenance and service by yourself, you should familiarize yourself with the information provided in this section on general maintenance and service for your SUBARU.

Incorrect or incomplete service could cause improper or unsafe vehicle operation. Any problems caused by improper maintenance and service performed by you are not eligible for warranty coverage.

⚠ WARNING

- **Testing of an All-Wheel Drive model must NEVER be performed on a single two-wheel dynamometer or similar apparatus. Attempting to do so will result in transmission damage and in uncontrolled vehicle movement and may cause an accident or injuries to persons nearby.**
- **Always select a safe area when performing maintenance on your vehicle.**
- **Always be very careful to avoid injury when working on the vehicle. Remember that some of the materials in the vehicle may be hazardous if improperly used or handled, for example, battery acid.**
- **Your vehicle should only be serviced by persons fully competent to do so. Serious personal injury may result to persons not experienced in servicing vehicles.**
- **Always use the proper tools and make certain that they are well maintained.**
- **Never get under the vehicle supported only by a jack. Always use safety stands to support the vehicle.**
- **Never keep the engine running in a poorly ventilated area, such as a garage or other closed areas.**
- **Do not smoke or allow open flames around the fuel or battery. This will cause a fire.**
- **Because the fuel system is under pressure, replacement of the fuel filter should be performed only by your SUBARU dealer.**
- **Wear adequate eye protection to**

– CONTINUED –

guard against getting oil or fluids in your eyes. If something does get in your eyes, thoroughly wash them out with clean water.

- Do not tamper with the wiring of the SRS airbag system or seatbelt pretensioner system, or attempt to take its connectors apart, as that may activate the system or it can render it inoperative. NEVER use a circuit tester for this wiring.
  If your SRS airbag or seatbelt pretensioner needs service, consult your nearest SUBARU dealer.

■ Before checking or servicing in the engine compartment

⚠ WARNING

- Always stop the engine and set the parking brake firmly to prevent the vehicle from moving.
- Always let the engine cool down. Engine parts become very hot when the engine is running and remain hot for some time after the engine is stopped.
- Do not spill engine oil, engine coolant, brake fluid or any other fluid on hot engine components. This may cause a fire.
- Always remove the key from the ignition switch. When the ignition switch is in the “ON” position, the cooling fan may operate suddenly even when the engine is stopped.
- Before performing any servicing on a vehicle equipped with a remote engine start system (a dealer option) temporarily place that system in the service mode to prevent it from unexpectedly starting the engine.

■ When checking or servicing in the engine compartment

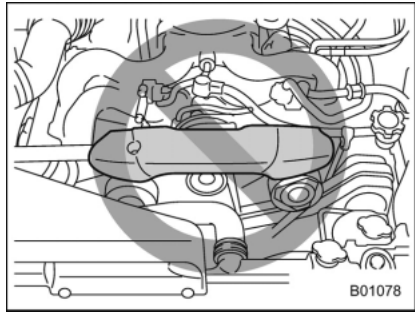

⚠ CAUTION

Do not contact the belt cover while checking the components in the engine compartment. Doing so may cause your hand to slip off the belt cover and result in an unexpected injury.

■ When checking or servicing in the engine compartment while the engine is running

⚠ WARNING

A running engine can be dangerous. Keep your fingers, hands, clothing, hair and tools away from the cooling fan, belts and any other moving engine parts. Removing rings, watches and ties is advisable.

Engine hood

⚠ WARNING

Always check that the hood is properly locked before you start driving. If it is not, it might fly open while the vehicle is moving and block your view, which may cause an accident and serious bodily injury.

To open the hood:

1. If the wiper blades are lifted off the windshield, return them to their original position.

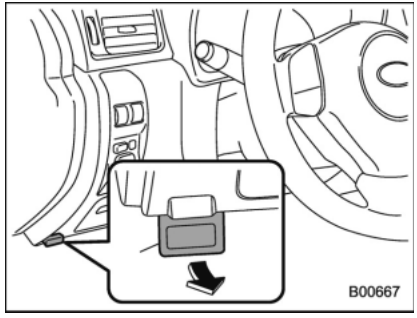

2. Pull the hood release knob under the instrument panel.

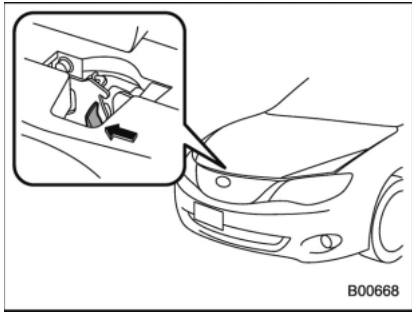

3. Release the secondary hood release by moving the lever between the front grille and the hood toward the left.
4. Lift up the hood.

To close the hood:

1. Lower the hood to a height of approximately 5.9 in (15 cm) above its closed position and then let it drop.
2. After closing the hood, be sure the hood is securely locked.

If this does not close the hood, release it from a slightly higher position. Do not push the hood forcibly to close it. It could deform the metal.

Engine compartment overview

■ Turbo models except STI

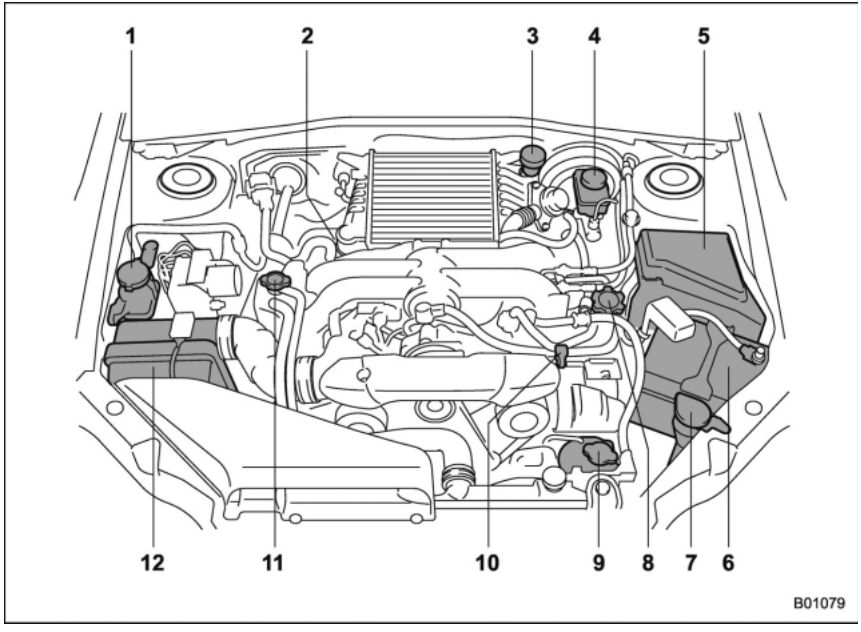

1) Power steering fluid reservoir (page 11-17)
2) Manual transmission oil level gauge (MT) (page 11-16)
3) Clutch fluid reservoir (page 11-19)
4) Brake fluid reservoir (page 11-18)
5) Fuse box (page 11-38)
6) Battery (page 11-37)
7) Windshield washer tank (page 11-31)
8) Engine oil filler cap (page 11-8)
9) Engine coolant reservoir (page 11-12)
10) Engine oil level gauge (page 11-8)
11) Radiator cap (page 11-12)
12) Air cleaner case (page 11-13)

■ STI

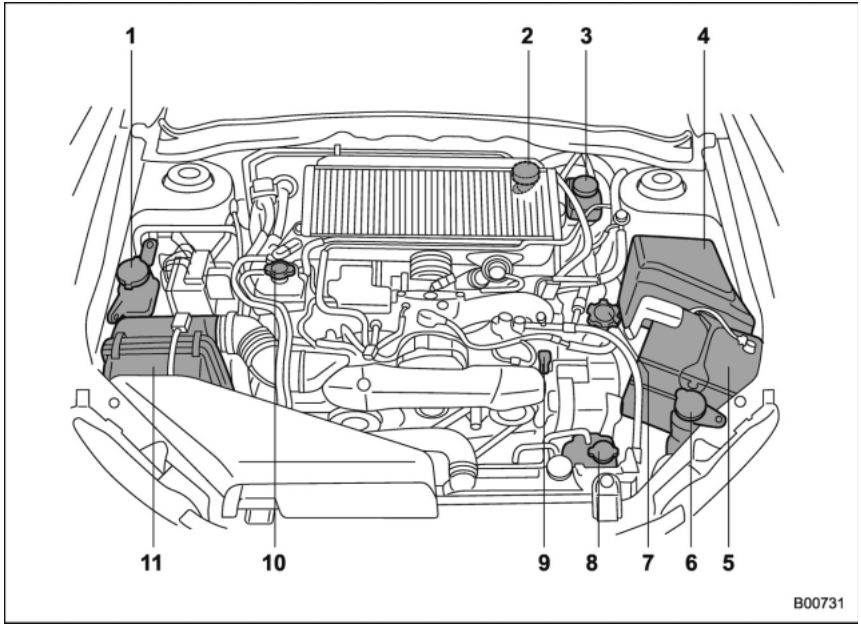

1) Power steering fluid reservoir (page 11-17)
2) Clutch fluid reservoir (page 11-19)
3) Brake fluid reservoir (page 11-18)
4) Fuse box (page 11-38)
5) Battery (page 11-37)
6) Windshield washer tank (page 11-31)
7) Engine oil filler cap (page 11-8)
8) Engine coolant reservoir (page 11-12)
9) Engine oil level gauge (page 11-8)
10) Radiator cap (page 11-12)
11) Air cleaner case (page 11-13)

Engine oil

NOTE

• The engine oil consumption rate is not stabilized, and therefore cannot be determined until the vehicle has traveled at least several thousand miles (kilometers). Even after break-in, when the vehicle is used under severe driving conditions such as those mentioned in the Warranty and Maintenance Booklet, engine oil is consumed or deteriorated more quickly than under normal driving conditions. If you drive your vehicle under these severe conditions, you should check the oil level at least at every second fuel fill-up time, and change the oil more frequently. Please refer to the Warranty and Maintenance Booklet for more details.

• If the oil consumption rate seems abnormally high after the break-in period, for example more than 1 quart per 1,200 miles or 1 liter per 2,000 kilometers, contact your SUBARU dealer.

■ Checking the oil level

Check the engine oil level at each fuel stop.

1. Park the vehicle on a level surface and stop the engine.

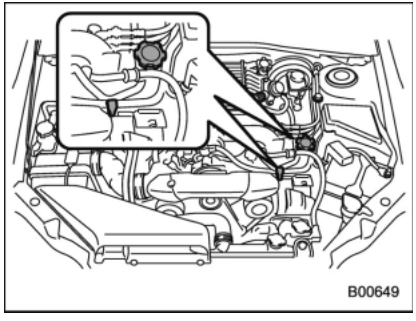

2. Pull out the level gauge that has the "" symbol on top, wipe it clean, and insert it again.

3. Be sure the level gauge is correctly inserted until it stops.

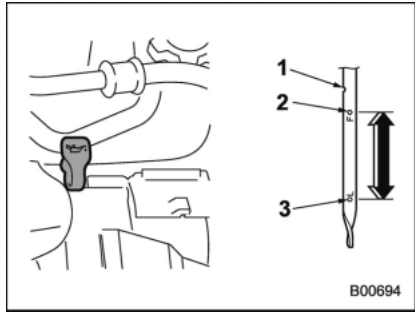

1) Notch
2) Upper level
3) Lower level

4. Pull out the level gauge again and check the oil level on it. If it is below the lower level, add oil to bring the level up to the upper level.

⚠ CAUTION

• Use only engine oil with the recommended grade and viscosity.

• Be careful not to spill engine oil when adding it. If oil touches the exhaust pipe, it may cause a bad smell, smoke, and/or a fire. If engine oil gets on the exhaust

pipe, be sure to wipe it off.

- **If the level gauge is not pulled out easily, twist the level gauge right and left, then pull it out. Otherwise, you may be injured accidentally straining yourself.**

If you check the oil level just after stopping the engine, wait a few minutes for the oil to drain back into the oil pan before checking the level.

Just after driving or while the engine is warm, the engine oil level reading may be in a range between the upper level and the notch mark. This is caused by thermal expansion of the engine oil.

To prevent overfilling the engine oil, do not add any additional oil above the upper level when the engine is cold.

■ Changing the oil and oil filter

⚠ CAUTION

- **If you change your own oil, be sure to drain all the oil from the filter before disposal.**
- **Do not dispose of used engine oil by placing it in the trash, or by pouring it onto the ground, into sewers, or into any body of water. Check with your local government office for the proper disposal options available to you.**

Change the oil and oil filter according to the maintenance schedule in the "Warranty and Maintenance Booklet".

The engine oil and oil filter must be changed more frequently than listed in the maintenance schedule when driving on dusty roads, when short trips are frequently made, or when driving in extremely cold weather.

1. Warm up the engine by letting the engine idle for approximately 10 minutes to ease draining the engine oil.
2. Park the vehicle on a level surface and stop the engine.
3. Remove the oil filler cap.

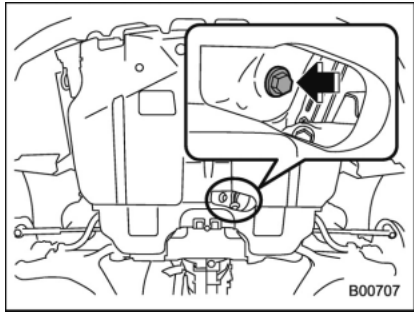

4. Drain out the engine oil by removing the drain plug while the engine is still warm. The used oil should be drained into an appropriate container and disposed of properly.

⚠ WARNING

Be careful not to burn yourself with hot engine oil.

5. Wipe the seating surface of the drain plug with a clean cloth and tighten it securely with a new sealing washer after the oil has completely drained out.
6. Remove the under cover.

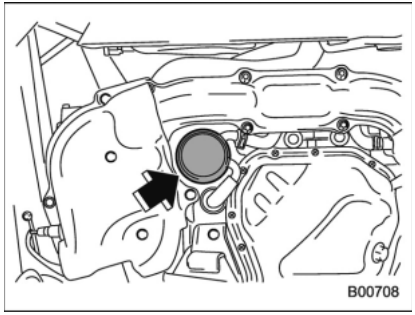

7. Remove the oil filter with an oil filter wrench.
8. Before installing a new oil filter, apply a

– CONTINUED –

thin coat of engine oil to the seal.

9. Clean the rubber seal seating area of the bottom of engine and install the oil filter by hand turning. Be careful not to twist or damage the seal.

10. Tighten the oil filter by the amount indicated in the following table after the seal makes contact with the bottom of engine.

Oil filter color	Part number	Amount of rotation
Black	15208AA100	1 rotation
Blue	15208AA12A	7/8 rotation

⚠ CAUTION

- **Never over tighten the oil filter because that can result in an oil leak.**
- **Thoroughly wipe off any engine oil that has spilled over the exhaust pipe and/or under-cover. If spilled oil is not promptly wiped up, the oil could cause a fire.**

11. Reinstall under cover.

12. Pour engine oil through the filler neck. For the oil capacity (guideline), refer to "Engine oil" ☞12-5.

The oil quantity indicated above is only guideline.

The necessary quantity of oil depends on the quantity of oil that has been drained. The quantity of drained oil differs slightly depending on the temperature of the oil and the time the oil is left flowing out. After refilling the engine with oil, therefore, you must use the level gauge to confirm that the level is correct.

13. Start the engine and make sure that no oil leaks appear around the filter's rubber seal and drain plug.

14. Run the engine until it reaches the normal operating temperature. Then stop the engine and wait a few minutes to allow the oil drain back. Check the oil level again and if necessary, add more engine oil.

⚠ CAUTION

Be careful not to spill engine oil when adding it. If oil touches the exhaust pipe, it may cause a bad smell, smoke, and/or a fire.

■ Recommended grade and viscosity

⚠ CAUTION

Use only engine oil with the recommended grade and viscosity.

Refer to "Engine oil" ☞12-5.

NOTE

Engine oil viscosity (thickness) affects fuel economy. Oils of lower viscosity provide better fuel economy. However, in hot weather, oil of higher viscosity is required to properly lubricate the engine.

■ Synthetic oil

You should use synthetic engine oil that meets the same requirements given for conventional engine oil. When using synthetic oil, you must use oil of the same classification, viscosity and grade shown in this Owner's Manual. Refer to "Engine oil" ☞12-5. Also, you must follow the oil and filter changing intervals shown in the Warranty and Maintenance booklet.

NOTE

Synthetic oil of the grade and viscosity noted in chapter 12 is the recom-

mended engine oil for optimum engine performance. Conventional oil may be used if synthetic oil is unavailable.

Cooling system

⚠ WARNING

- **Never attempt to remove the radiator cap until the engine has been shut off and has cooled down completely. Since the coolant is under pressure, you may suffer serious burns from a spray of boiling hot coolant when the cap is removed.**
- **Be careful of the rotating cooling fan when the engine hood is open. When the engine temperature is high, the cooling fan in the engine compartment may operate when the ignition switch is turned to the "ON" position, even if the engine is stopped. Touching the cooling fan while it is rotating may result in injury.**

⚠ CAUTION

- **Vehicles are filled at the factory with SUBARU Super Coolant that does not require the first change for 11 years/137,500 miles (11 years/220,000 km). This coolant should not be mixed with any other brand or type of coolant during this period. Mixing with a different coolant will reduce the life of the coolant. Should it be necessary to top up the coolant for any reason, use only SUBARU Super Coolant.**

  If the SUBARU Super Coolant is diluted with another brand or type, the maintenance interval is shortened to that of the mixing coolant.
- **Do not splash the engine coolant over painted parts. The alcohol contained in the engine coolant may damage the paint surface.**

■ Cooling fan, hose and connections

Your vehicle employs an electric cooling fan which is thermostatically controlled to operate when the engine coolant reaches a specific temperature.

If the radiator cooling fan does not operate even when the engine coolant temperature gauge exceeds the normal operating range, the cooling fan circuit may be defective. Refer to "Temperature gauge" ☞3-10.

Check the fuse and replace it if necessary.

– CONTINUED –

Refer to “Fuses” ☞11-38 and “Fuse panel located in the engine compartment” ☞12-12.

If the fuse is not blown, have the cooling system checked by your SUBARU dealer.

If frequent addition of coolant is necessary, there may be a leak in the engine cooling system. It is recommended that the cooling system and connections be checked for leaks, damage, or looseness.

■ Engine coolant

▼ Checking the coolant level

⚠ WARNING

Never attempt to remove the radiator cap until the engine has been shut off and has cooled down completely. Since the coolant is under pressure, you may suffer serious burns from a spray of boiling hot coolant when the cap is removed.

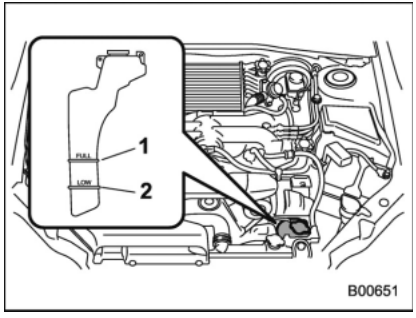

1) “FULL” level mark
2) “LOW” level mark

Check the coolant level at each fuel stop.

1. Check the coolant level on the outside of the reservoir while the engine is cool.
2. If the level is close to or lower than the “LOW” level mark, add coolant up to the “FULL” level mark. If the reserve tank is empty, remove the radiator cap and refill as required.

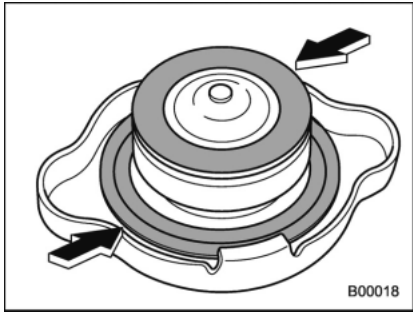

3. After refilling the reserve tank and the radiator, reinstall the cap and check that the rubber gaskets inside the radiator cap are in the proper position.

⚠ WARNING

Never attempt to remove the radiator cap until the engine has been shut off and has cooled down completely. Since the coolant is under pressure, you may suffer serious burns from a spray of boiling hot coolant when the cap is removed.

⚠ CAUTION

- **Be careful not to spill engine coolant when adding it. If coolant touches the exhaust pipe, it may cause a bad smell, smoke, and/or a fire. If engine coolant gets on the exhaust pipe, be sure to wipe it off.**
- **Do not splash the engine coolant over painted parts. The alcohol contained in the engine coolant may damage the paint surface.**

▼ Changing the coolant

It may be difficult to change the coolant. Have the coolant changed by your SUBARU dealer if necessary.

The coolant should be changed according to the maintenance schedule in the "Warranty and Maintenance Booklet".

Air cleaner element

⚠ WARNING

Do not operate the engine with the air cleaner element removed. The air cleaner element not only filters intake air but also stops flames if the engine backfires. If the air cleaner element is not installed when the engine backfires, you could be burned.

⚠ CAUTION

When replacing the air cleaner element, use a genuine SUBARU air cleaner element. If it is not used, there is the possibility of causing a negative effect to the engine.

The air cleaner element functions as a filter screen. When the element is perforated or removed, engine wear will be excessive and engine life shortened.

It is not necessary to clean or wash the air cleaner element.

■ Replacing the air cleaner element

Replace the air cleaner element according to the maintenance schedule in the "Warranty and Maintenance Booklet". Under extremely dusty conditions, replace it more frequently. It is recommended that you always use genuine SUBARU parts.

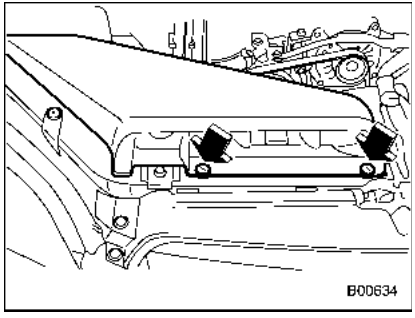

1. Use a screwdriver to undo the clips on the air intake duct, then remove the air intake duct.

– CONTINUED –

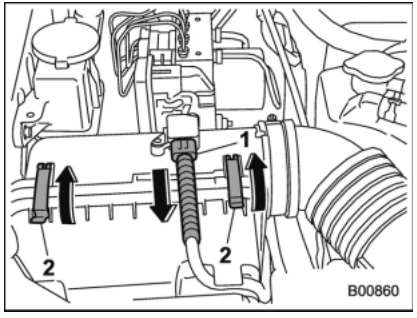

1) Connector
2) Clip

2. Unplug the connector that is attached to the top of the air cleaner case.

3. Unsnap the two clips holding the air cleaner case cover.

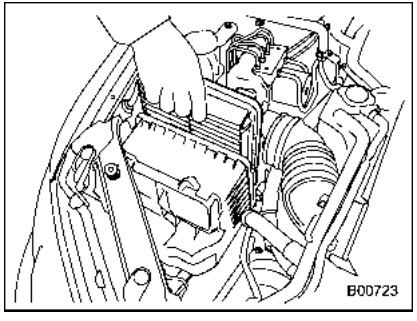

4. Open the air cleaner case and remove the air cleaner element.

5. Clean the inside of the air cleaner case and case cover with a damp cloth and install a new air cleaner element.

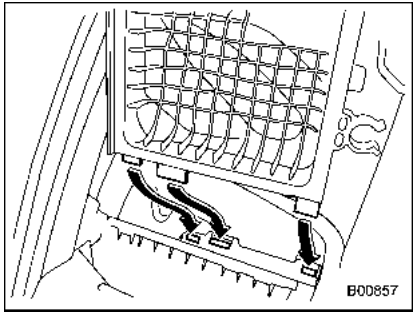

6. If the air cleaner case has been removed, insert the three projections on the air cleaner case into the slits on the air cleaner case cover.

7. Install in the reverse order of removal.

Spark plugs

It may be difficult to replace the spark plugs. It is recommended that you have the spark plugs replaced by your SUBARU dealer.

The spark plugs should be replaced according to the maintenance schedule in the “Warranty and Maintenance Booklet”.

■ Recommended spark plugs

For the recommended spark plugs, refer to “Electrical system” ☞12-3.

Drive belts

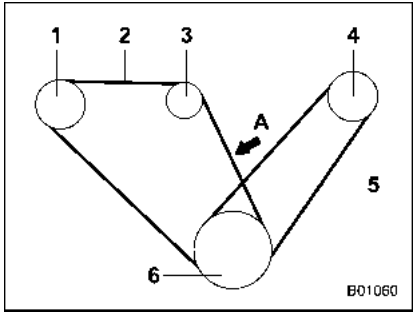

1) Power steering oil pump pulley
2) Front side belt
3) Alternator pulley
4) Air conditioner compressor pulley
5) Rear side belt
6) Crank pulley
A) 22 lbf (98 N, 10 kgf)

⚠ CAUTION

The front side belt, which runs in conjunction with the following components, must be used within the specified deflection.

- **Power steering oil pump pulley**
- **Alternator pulley**
- **Crank pulley**

Check the deflection of the front side belt and if there is any looseness, cracks, wear or unusual noise on the front side belt, contact your SUBARU dealer.

Continuing to use the vehicle with the belt outside of the specification may cause the engine to malfunction and the above components to malfunction.

To check the deflection of the front side belt, place a straightedge (ruler) across two adjacent pulleys (alternator pulley and crank pulley) and apply a force of 22 lbf (98 N, 10 kgf) midway between the pulleys by using a spring scale. The belt deflection should be the amount specified. If the front side belt is loose, cracked or worn, contact your SUBARU dealer.

in (mm)

	Deflection	
	New belt	Used belt
A	0.28 – 0.35 (7.0 – 9.0)	0.35 – 0.43 (9.0 – 11.0)

The rear side belt is a stretch-type belt, therefore the deflection does not need to be checked. If there are cracks or wear confirmed on the belts and a squeaking noise is heard from them, contact your SUBARU dealer.

Manual transmission oil

■ Checking the oil level

NOTE

For STI models, there is no transmission oil level gauge. Consult your SUBARU dealer to check the oil level.

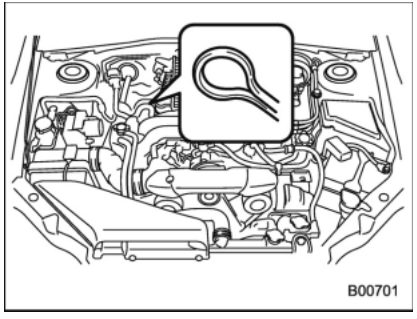

Except STI

Check the oil level monthly.

1. Park the vehicle on a level surface and stop the engine.
2. Pull out the level gauge, wipe it clean, and insert it again.

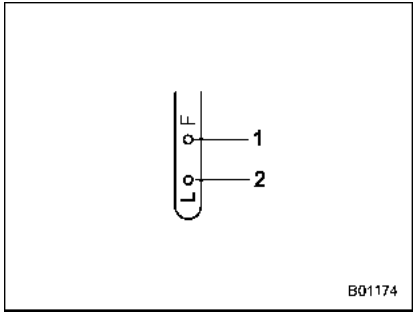

1) Upper level
2) Lower level

3. Pull out the level gauge again and check the oil level on it. If it is below the lower level, add oil through the level gauge hole to bring the level up to the upper level.

⚠ CAUTION

Be careful not to spill manual transmission oil when adding it. If oil touches the exhaust pipe, it may cause a bad smell, smoke, and/or a fire. If oil gets on the exhaust pipe, be sure to wipe it off.

■ Recommended grade and viscosity

Each oil manufacturer has its own base oils and additives. Never use different brands together. For details, refer to “Manual transmission and rear differential gear oil” ☞12-6.

Rear differential gear oil

There is no rear differential gear oil level gauge. To check the rear differential gear oil level, we recommend that you consult your SUBARU dealer for inspection.

■ Recommended grade and viscosity

Each oil manufacturer has its own base oils and additives. Never use different brands together. For details, refer to “Manual transmission and rear differential gear oil” ☞12-6.

Power steering fluid

■ Checking the fluid level

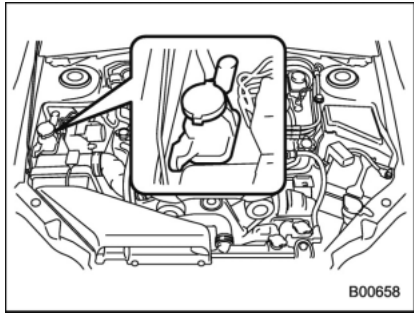

The power steering fluid expands greatly as its temperature rises; the fluid level differs according to fluid temperature. Therefore, the reservoir tank has two different checking ranges for hot and cold fluids.

Check the power steering fluid level monthly.

1. Park the vehicle on a level surface, and stop the engine.

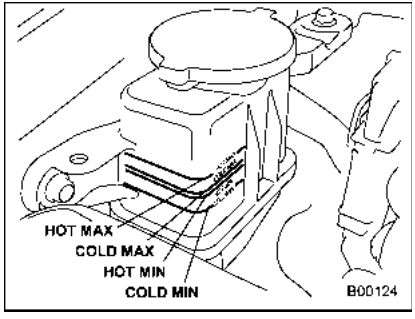

2. Check the fluid level of the reservoir tank.

When the fluid is hot after the vehicle has been run: Check that the oil level is between “HOT MIN” and “HOT MAX” on the surface of the reservoir tank.

When the fluid is cool before the vehicle is run: Check that the oil level is between “COLD MIN” and “COLD MAX” on the surface of the reservoir tank.

3. If the fluid level is lower than the applicable “MIN” line, add the recommended fluid as necessary to bring the level between the “MIN” and “MAX” line.

If the fluid level is extremely low, it may indicate possible leakage. Consult your SUBARU dealer for an inspection.

– CONTINUED –

⚠ WARNING

Be careful not to burn yourself because the fluid may be hot.

⚠ CAUTION

- **When power steering fluid is being added, use only clean fluid, and be careful not to allow any dirt into the tank. And never use different brands together.**
- **Be careful not to spill power steering fluid when adding it. If power steering fluid touches the exhaust pipe, it may cause a bad smell, smoke, and/or a fire. If power steering fluid gets on the exhaust pipe, be sure to wipe it off.**

■ Recommended fluid

Refer to “Fluids” ☞12-7.

Brake fluid

■ Checking the fluid level

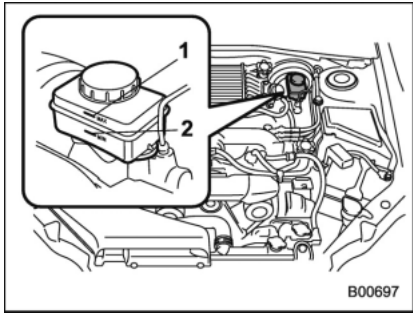

1) “MAX” level mark
2) “MIN” level mark

Check the fluid level monthly.

Check the fluid level on the outside of the reservoir. If the level is below “MIN”, add the recommended brake fluid to “MAX”.

Use only brake fluid from a sealed container.

⚠ WARNING

- **Never let brake fluid contact your eyes because brake fluid can be harmful to your eyes. If brake fluid gets in your eyes, immediately flush them thoroughly with clean water. For safety, when performing this work, wearing eye protection is advisable.**
- **Brake fluid absorbs moisture from the air. Any absorbed moisture can cause a dangerous loss of braking performance.**
- **If the vehicle requires frequent refilling, there may be a leak. If you suspect a problem, have the vehicle checked at your SUBARU dealer.**

⚠ CAUTION

- **When adding brake fluid, be careful not to allow any dirt into the reservoir.**
- **Never splash the brake fluid over painted surfaces or rubber parts. Alcohol contained in the brake fluid may damage them.**
- **Be careful not to spill brake fluid when adding it. If brake fluid touches the exhaust pipe, it may cause a bad smell, smoke, and/or a fire. If brake fluid gets on the exhaust pipe, be sure to wipe it off.**

■ Recommended brake fluid

Refer to “Fluids” ☞12-7.

⚠ CAUTION

Never use different brands of brake fluid together. Also, avoid mixing DOT 3 and DOT 4 brake fluids even if they are the same brand.

Clutch fluid

■ Checking the fluid level

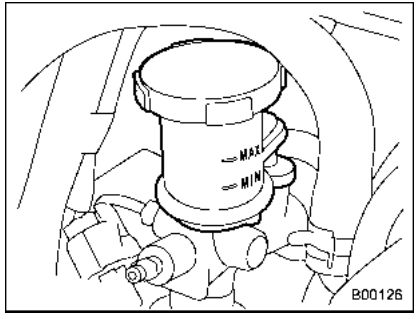

Check the fluid level on the outside of the reservoir. If the level is below “MIN” level mark, add the recommended clutch fluid to “MAX” level mark.

Use only clutch fluid from a sealed container.

⚠ WARNING

Never let clutch fluid contact your eyes because clutch fluid can be harmful to your eyes. If clutch fluid gets in your eyes, immediately flush them thoroughly with clean water. For safety, when performing this work, wearing eye protection is advisable.

⚠ CAUTION

- **Clutch fluid absorbs moisture from the air. Any absorbed moisture can cause improper clutch operation.**
- **If the vehicle requires frequent refilling, there may be a leak. If you suspect a problem, have the vehicle checked at your SUBARU dealer.**
- **When clutch fluid is added, be careful not to allow any dirt into the tank.**
- **Never splash the clutch fluid over painted surfaces or rubber parts. Alcohol contained in the clutch fluid may damage them.**
- **Be careful not to spill clutch fluid when adding it. If clutch fluid touches the exhaust pipe, it may cause a bad smell, smoke, and/or a fire. If clutch fluid gets on the exhaust pipe, be sure to wipe it off.**

– CONTINUED –

■ Recommended clutch fluid

Refer to “Fluids” ☞12-7.

⚠ CAUTION

Never use different brands of clutch fluid together. Also, avoid mixing DOT 3 and DOT 4 brake fluids even if they are the same brand.

Brake booster

If the brake booster does not operate as described in the following, have it checked by your SUBARU dealer.

1. With the engine off, depress the brake pedal several times, applying the same pedal force each time. The distance the pedal travels should not vary.
2. With the brake pedal depressed, start the engine. The pedal should move slightly down to the floor.
3. With the brake pedal depressed, stop the engine and keep the pedal depressed for 30 seconds. The pedal height should not change.
4. Start the engine again and run for approximately one minute then turn it off. Depress the brake pedal several times to check the brake booster. The brake booster operates properly if the pedal stroke decreases with each depression.

NOTE

For vehicles equipped with the brake assist system, when you depress the brake pedal strongly or suddenly, you might feel that lighter depression of the brake pedal generates a greater braking force. However, even though these occur, they do not indicate any malfunctions, and the brake assist system is operating properly.

Brake assist is not a system that brings more braking ability to the vehicle beyond its breaking capability.

Brake pedal

Check the brake pedal free play and reserve distance according to the maintenance schedule in the “Warranty and Maintenance Booklet”.

■ Checking the brake pedal free play

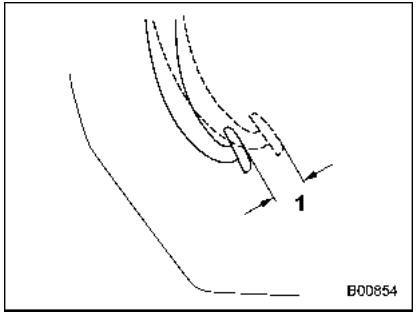

1) 0.02 – 0.08 in (0.5 – 2.0 mm)

Stop the engine and firmly depress the brake pedal several times. Lightly pull the brake pedal up with one finger to check the free play with a force of less than 2 lbf (10 N, 1 kgf).

If the free play is not within proper specification, contact your SUBARU dealer.

■ Checking the brake pedal reserve distance

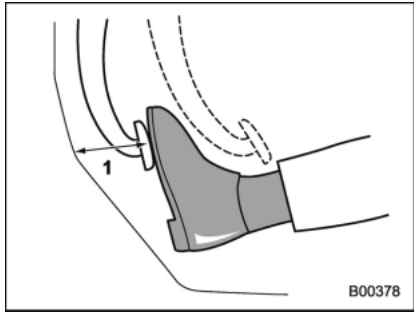

1) More than 2.56 in (65 mm)

Depress the pedal with a force of approximately 66 lbf (294 N, 30 kgf) and measure the distance between the upper surface of the pedal pad and the floor.

When the measurement is smaller than the specification, or when the pedal does not operate smoothly, contact with your SUBARU dealer.

Clutch pedal

Check the clutch pedal free play and reserve distance according to the maintenance schedule in the “Warranty and Maintenance Booklet”.

■ Checking the clutch function

Check the clutch engagement and disengagement.

1. With the engine idling, check that there are no abnormal noises when the clutch pedal is depressed, and that shifting into 1st or reverse feels smooth.
2. Start the vehicle by releasing the pedal slowly to check that the engine and transmission smoothly couple without any sign of slippage.

– CONTINUED –

■ Checking the clutch pedal free play

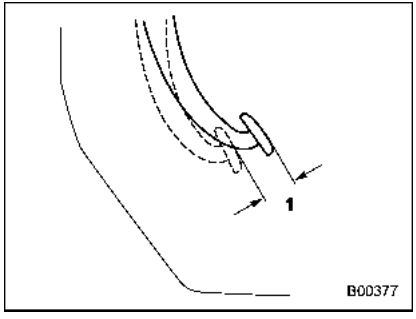

1) 0.16 – 0.43 in (4.0 – 11.0 mm)

Lightly depress the clutch pedal down with your finger until you feel resistance, and check the free play.

If the free play is not within proper specification, contact your SUBARU dealer.

Hill start assist system

Ensure that the Hill start assist system operates properly under the following circumstances:

1. Stop the vehicle on an uphill grade by depressing the brake pedal and clutch pedal, with the engine running.
2. Make sure that the vehicle does not move backward even after the brake pedal is released.
3. Then make sure the vehicle starts climbing the grade by following the normal starting procedures.

If the Hill start assist system does not operate as described above, contact with your SUBARU dealer.

Replacement of brake pad and lining

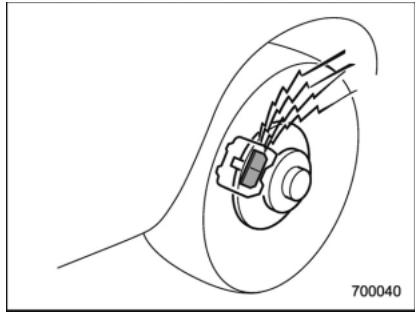

The disc brakes have audible wear indicators on the brake pads. If the brake pads wear close to their service limit, the wear indicator makes a very audible scraping noise when the brake pedal is applied.

If you hear this scraping noise each time you apply the brake pedal, have the brake pads serviced by your SUBARU dealer as soon as possible.

⚠ CAUTION

If you continue to drive despite the scraping noise from the audible

brake pad wear indicator, it will result in the need for costly brake rotor repair or replacement.

■ Breaking-in of new brake pads and linings

When replacing the brake pad or lining, use only genuine SUBARU parts. After replacement, the new parts must be broken in as follows.

▼ Brake pad and lining

While maintaining a speed of 30 to 40 mph (50 to 65 km/h), step on the brake pedal lightly. Repeat this five or more times.

▼ Parking brake lining

1. Drive the vehicle at a speed of approximately 22 mph (35 km/h).
2. With the parking brake release button pushed in, pull the parking brake lever SLOWLY and GENTLY (pulling with a force of approximately 33.7 lbf [150 N, 15.3 kgf]).
3. Drive the vehicle for approximately 220 yards (200 meters) in this condition.
4. Wait 5 to 10 minutes for the parking brake to cool down. Repeat this procedure.
5. Check the parking brake stroke. If the parking brake stroke is out of the specified range, adjust it by turning the adjusting nut located on the parking brake lever.

Parking brake stroke:
7 – 8 notches / 45 lbf (200 N, 20.4 kgf)

⚠ WARNING

A safe location and situation should be selected for break-in driving.

⚠ CAUTION

Pulling the parking brake lever too forcefully may cause the rear wheels to lock. To avoid this, be certain to pull the lever up slowly and gently.

Parking brake stroke

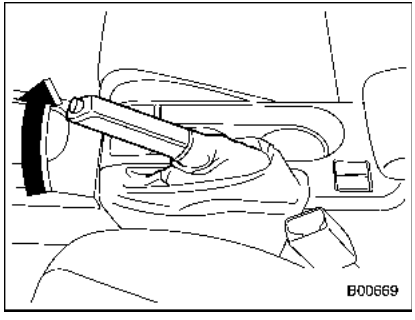

Check the parking brake stroke according to the maintenance schedule in the “Warranty and Maintenance Booklet”. When the parking brake is properly adjusted, braking power is fully applied by pulling the lever up 7 to 8 notches gently but firmly (approximately 45 lbf [200 N, 20.4 kgf]). If the parking brake lever stroke is not within the specified range, have the brake system checked and adjusted at your SUBARU dealer.

Tires and wheels

■ Types of tires

You should be familiar with type of tires present on your vehicle.

▼ All season tires

All season tires are designed to provide an adequate measure of traction, handling and braking performance in year-round driving including snowy and icy road conditions. However all season tires do not offer as much traction performance as winter (snow) tires in heavy or loose snow or on icy roads.

All season tires are identified by “ALL SEASON” and/or “M+S” (Mud & Snow) on the tire sidewall.

▼ Summer tires

Summer tires are high-speed capability tires best suited for highway driving under dry conditions.

Summer tires are inadequate for driving on slippery roads such as on snow-covered or icy roads.

If you drive your vehicle on snow-covered or icy roads, we strongly recommend the use of winter (snow) tires.

When installing winter tires, be sure to replace all four tires.

▼ Winter (snow) tires

Winter tires are best suited for driving on snow-covered and icy roads. However winter tires do not perform as well as summer tires and all season tires on roads other than snow-covered and icy roads.

■ Tire pressure monitoring system (TPMS) (if equipped)

The tire pressure monitoring system provides the driver with a warning message by sending a signal from a sensor that is installed in each wheel when tire pressure is severely low. The tire pressure monitoring system will activate only when the vehicle is driven. Also, this system may not react immediately to a sudden drop in tire pressure (for example, a blow-out caused by running over a sharp object).

If you adjust the tire pressures in a warm garage and will then drive the vehicle in cold outside air, the resulting drop in tire pressures may cause the low tire pressure warning light to illuminate. To avoid this problem when adjusting the tire pressures in a warm garage, inflate the tires to pressures higher than those shown on the tire placard. Specifically, inflate them by an extra 1 psi (6.9 kPa, 0.07 kgf/cm^2) for every difference of 10°F (5.6°C) between the temperature in the garage and the temperature outside. By way of example, the following table shows the required tire pressures that correspond to various outside temperatures when the temperature in the garage is 60°F (15.6°C).

Example:

Tire size: P205/55R16 89V and P205/50R17 88V

Standard tire pressures:

Front: 33 psi (230 kPa, 2.3 kgf/cm^2)

Rear: 32 psi (220 kPa, 2.2 kgf/cm^2)

Garage temperature: 60°F (15.6°C)

Outside temperature	Adjusted pressure [psi (kPa, kgf/cm^2)]	
	Front	Rear
30°F (−1°C)	36 (250, 2.5)	35 (240, 2.4)
10°F (−12°C)	38 (265, 2.65)	37 (255, 2.55)
−10°F (−23°C)	40 (280, 2.8)	39 (270, 2.7)

If the low tire pressure warning light illuminates when you drive the vehicle in cold outside air after adjusting the tire pressures in a warm garage, re-adjust the tire pressures using the method described above. Then, increase the vehicle speed to at least 20 mph (32 km/h) and check to see that the low tire pressure warning light turns off a few minutes later. If the low tire pressure warning light does not turn off,

the tire pressure monitoring system may not be functioning normally. In this event, go to a SUBARU dealer to have the system inspected as soon as possible.

While the vehicle is driven, friction between tires and the road surface causes the tires to warm up. After illumination of the low tire pressure warning light, any increase in the tire pressures caused by an increase in the outside air temperature or by an increase in the temperature in the tires can cause the low tire pressure warning light to turn off.

System resetting is necessary when the wheels are changed (for example, a switch to snow tires) and new TPMS valves are installed on the newly fitted wheels. Have this work performed by a SUBARU dealer following wheel replacement.

It may not be possible to install TPMS valves on certain wheels that are on the market. Therefore, if you change the wheels (for example, a switch to snow tires), use wheels that have the same part number as the standard-equipment wheels. Without four operational TPMS valve/sensors on the wheels, the TPMS will not fully function and the warning light on the combination meter will illuminate steadily after blinking for approximately one minute.

When a tire is replaced, adjustments are necessary to ensure continued normal operation of the tire pressure monitoring system. As with wheel replacement, therefore, you should have the work performed by a SUBARU dealer.

⚠ WARNING

If the low tire pressure warning light does not illuminate briefly after the ignition switch is turned ON or the light illuminates steadily after blinking for approximately one minute, you should have your Tire Pressure Monitoring System checked at a SUBARU dealer as soon as possible.

If this light illuminates while driving, never brake suddenly and keep driving straight ahead while gradually reducing speed. Then slowly pull off the road to a safe place. Otherwise an accident involving serious vehicle damage and serious personal injury could occur.

If this light still illuminates while driving after adjusting the tire pressure, a tire may have significant damage and a fast leak that causes the tire to lose air rapidly. If you have a flat tire, replace it with a spare tire as soon as possible.

When a spare tire is mounted or a wheel rim is replaced without the original pressure sensor/transmitter being transferred, the low tire pressure warning light will illuminate steadily after blinking for approximately one minute. This indicates the TPMS is unable to monitor all four road wheels. Contact your SUBARU dealer as soon as possible for tire and sensor replacement and/or system resetting. If the light illuminates steadily after blinking for approximately one minute, promptly contact a SUBARU dealer to have the system inspected.

■ Tire inspection

Check on a daily basis that the tires are free from serious damage, nails, and stones. At the same time, check the tires for abnormal wear.

Contact your SUBARU dealer immediately if you find any problem.

NOTE

• When the wheels and tires strike curbs or are subjected to harsh treatment as when the vehicle is driven on a

– CONTINUED –

rough surface, they can suffer damage that cannot be seen with the naked eye. This type of damage does not become evident until time has passed. Try not to drive over curbs, potholes or on other rough surfaces. If doing so is unavoidable, keep the vehicle's speed down to a walking pace or less, and approach the curbs as squarely as possible. Also, make sure the tires are not pressed against the curb when you park the vehicle.

• If you feel unusual vibration while driving or find it difficult to steer the vehicle in a straight line, one of the tires and/or wheels may be damaged. Drive slowly to the nearest authorized SUBARU dealer and have the vehicle inspected.

■ Tire pressures and wear

Maintaining the correct tire pressures helps to maximize the tires' service lives and is essential for good running performance. Check and, if necessary, adjust the pressure of each tire (including the spare) at least once a month (for example, during a fuel stop) and before any long journey.

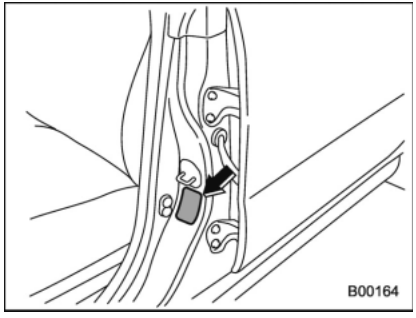

Check the tire pressures when the tires are cold. Use a pressure gauge to adjust the tire pressures to the values shown on the tire placard. The tire placard is located on the door pillar on the driver's side.

Driving even a short distance warms up the tires and increases the tire pressures. Also, the tire pressures are affected by the outside temperature. It is best to check tire pressure outdoors before driving the vehicle.

When a tire becomes warm, the air inside it expands, causing the tire pressure to increase. Be careful not to mistakenly release air from a warm tire to reduce its pressure.

NOTE

• The air pressure in a tire increases by approximately 4.3 psi (30 kPa, 0.3 kgf/cm^2) when the tire becomes warm.
• The tires are considered cold when the vehicle has been parked for at least three hours or has been driven less than one mile (1.6 km).

⚠ WARNING

Do not let air out of warm tires to adjust pressure. Doing so will result in low tire pressure.

Incorrect tire pressures detract from controllability and ride comfort, and they cause the tires to wear abnormally.

• **Correct tire pressure** (tread worn evenly)

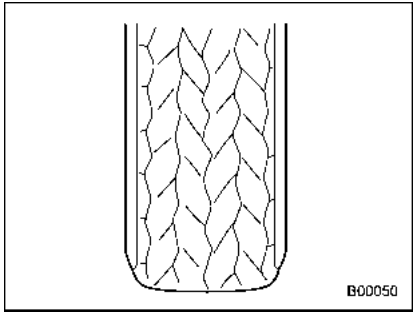

Roadholding is good, and steering is responsive. Rolling resistance is low, so fuel consumption is also lower.

• **Abnormally low tire pressure** (tread worn at shoulders)

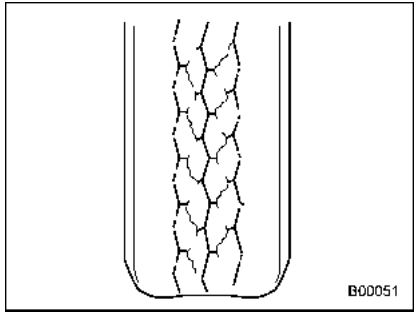

Rolling resistance is high, so fuel consumption is also higher.

• **Abnormally high tire pressure** (tread worn in center)

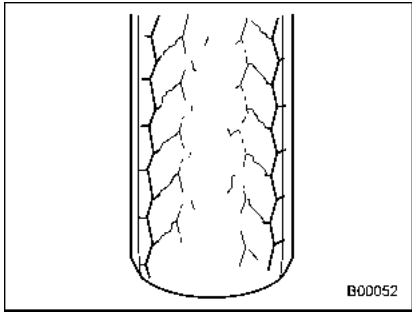

Ride comfort is poor. Also, the tire magnifies the effects of road-surface bumps and dips, possibly resulting in vehicle damage.

If the tire placard shows tire pressures for the vehicle when fully loaded, adjust the tire pressures to the values that match current loading conditions.

⚠ WARNING

Driving at high speeds with excessively low tire pressures can cause the tires to deform severely and to rapidly become hot. A sharp increase in temperature could cause tread separation, and destruction of

– CONTINUED –

the tires. The resulting loss of vehicle control could lead to an accident.

■ Wheel balance

Each wheel was correctly balanced when your vehicle was new, but the wheels will become unbalanced as the tires become worn during use. Wheel imbalance causes the steering wheel to vibrate slightly at certain vehicle speeds and detracts from the vehicle's straight-line stability. It can also cause steering and suspension system problems and abnormal tire wear. If you suspect that the wheels are not correctly balanced, have them checked and adjusted by your SUBARU dealer. Also have them adjusted after tire repairs and after tire rotation.

⚠ CAUTION

Loss of correct wheel alignment causes the tires to wear on one side and reduces the vehicle's running stability. Contact your SUBARU dealer if you notice abnormal tire wear.

NOTE

The suspension system is designed to hold each wheel at a certain alignment (relative to the other wheels and to the road) for optimum straight-line stability and cornering performance.

■ Wear indicators

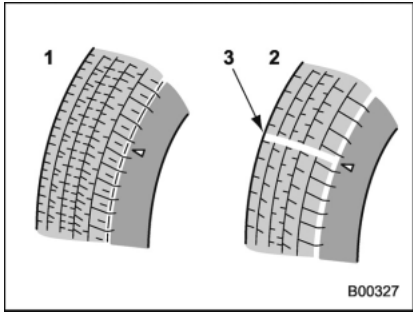

1) New tread
2) Worn tread
3) Tread wear indicator

Each tire incorporates a tread wear indicator, which becomes visible when the depth of the tread grooves decreases to 0.063 in (1.6 mm). A tire must be replaced when the tread wear indicator appears as a solid band across the tread.

⚠ WARNING

When a tire's tread wear indicator becomes visible, the tire is worn beyond the acceptable limit and must be replaced immediately. With a tire in this condition, driving at high speeds in wet weather can cause the vehicle to hydroplane. The resulting loss of vehicle control can lead to an accident.

NOTE

For safety, inspect tire tread regularly and replace the tires before their tread wear indicators become visible.

■ Tire rotation direction mark

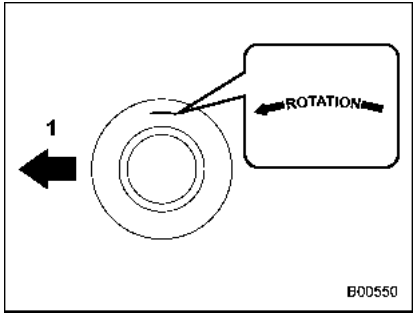

Example of tire rotation direction mark
1) Front

If the tire has the rotation direction specification, the tire rotation direction mark is placed on its sidewall.

When you install a tire that has the tire rotation direction mark, install the tire with the direction mark facing forward.

■ Tire rotation

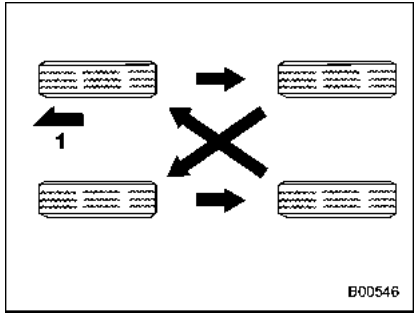

Vehicles equipped with 4 non-unidirectional tires
1) Front

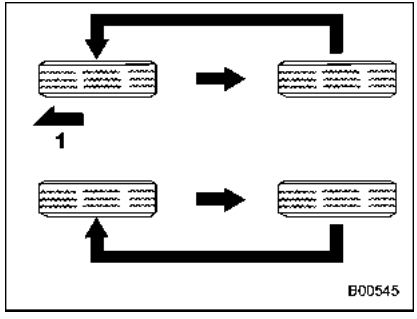

Vehicles equipped with unidirectional tires
1) Front

Tire wear varies from wheel to wheel. To maximize the life of each tire and ensure that the tires wear uniformly, it is best to rotate the tires every 7,500 miles (12,000 km). Move the tires to the positions shown in the illustration each time they are rotated.

Replace any damaged or unevenly worn tires at the time of rotation. After tire rotation, adjust the tires pressures and make sure the wheel nuts are correctly tightened.

After driving approximately 600 miles (1,000 km), check the wheel nuts again and retighten any nut that has become loose.

■ Tire replacement

The wheels and tires are important and integral parts of your vehicle's design; they cannot be changed arbitrarily. The tires fitted as standard equipment are optimally matched to the characteristics of the vehicle and were selected to give the best possible combination of running performance, ride comfort, and service life. It is essential for every tire to have a size and construction matching those shown on the tire placard and to have a speed symbol and load index matching those shown on the tire placard.

– CONTINUED –

Using tires of a non-specified size detracts from controllability, ride comfort, braking performance, speedometer accuracy and odometer accuracy. It also creates incorrect body-to-tire clearances and inappropriately changes the vehicle's ground clearance.

All four tires must be the same in terms of size, circumference, speed symbol, load index, construction, manufacturer, brand (tread pattern), and degrees of wear. You are advised to replace the tires with new ones that are identical to those fitted as standard equipment.

For safe vehicle operation, SUBARU recommends replacing all four tires at the same time.

⚠ WARNING

- **When you replacing or installing tire(s), all four tires must be the same for following items.**
  (a) Size
  (b) Circumference
  (c) Speed symbol
  (d) Load index
  (e) Construction
  (f) Manufacturer
  (g) Brand (tread pattern)
  (h) Degrees of wear
  For the items (a) to (d), you must obey the specification that is printed on the tire placard. The tire placard is located on the bottom of driver's door pillar.
  If all of four tires are not the same for items (a) to (h), there is a possibility that serious mechanical damage could occur to the drive train of your car, and affect the following.
  — Ride
  — Handling
  — Braking
  — Speedometer/Odometer calibration
  — Clearance between the body and tires
  It also may be dangerous and lead to loss of vehicle control, and it can lead to an accident.
- **Use only radial tires. Do not use radial tires together with belted bias tires and/or bias-ply tires. Doing so can dangerously reduce controllability, resulting in an accident.**

■ Wheel replacement

When replacing wheels due, for example, to damage, make sure the replacement wheels match the specifications of the wheels that are fitted as standard equipment. Replacement wheels are available from SUBARU dealers.

⚠ WARNING

Use only those wheels that are specified for your vehicle. Wheels not meeting specifications could interfere with brake caliper operation and may cause the tires to rub against the wheel well housing during turns. The resulting loss of vehicle control could lead to an accident.

NOTE

When any of the wheels are removed and replaced for tire rotation or to change a flat tire, always check the tightness of the wheel nuts after driving approximately 600 miles (1,000 km). If any nut is loose, tighten it to the specified torque.

Aluminum wheels

Aluminum wheels can be scratched and damaged easily. Handle them carefully to maintain their appearance, performance, and safety.

- When any of the wheels are removed and replaced for tire rotation or to change a flat tire, always check the tightness of the wheel nuts after driving approximately 600 miles (1,000 km). If any nut is loose, tighten it to the specified torque.
- Never apply oil to the threaded parts, wheel nuts, or tapered surface of the wheel.
- Never let the wheel rub against sharp protrusions or curbs.
- When wheel nuts, balance weights, or the center cap is replaced, be sure to replace them with genuine SUBARU parts designed for aluminum wheels.

Windshield washer fluid

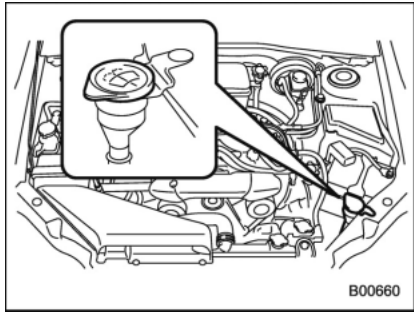

If you spray washer fluid on the windshield but the supply of washer fluid appears to diminish, check the level of washer fluid in the tank.

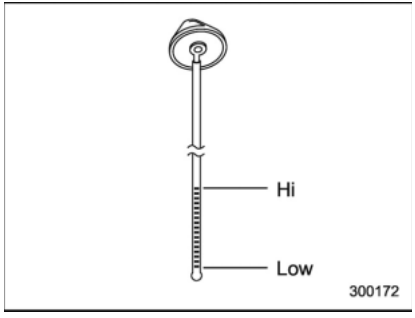

Washer fluid level gauge

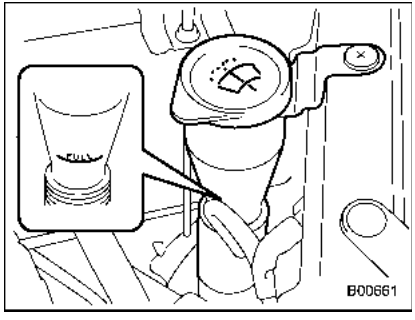

Remove the washer tank filler cap, then check the fluid level indicated by the level gauge (attached to the inside of the cap). If the level is near the “Low” mark, add fluid until it reaches the “Hi” level on the

– CONTINUED –

level gauge or the “FULL” mark on the tank.

Use windshield washer fluid. If windshield washer fluid is unavailable use clean water.

In areas where water freezes in winter, use an anti-freeze type windshield washer fluid. SUBARU Windshield Washer Fluid contains 58.5% methyl alcohol and 41.5% surfactant, by volume. Its freezing temperature varies according to how much it is diluted, as indicated in the following table.

Washer Fluid Concentration	Freezing Temperature
30%	**10.4°F (−12°C)**
50%	**−4°F (−20°C)**
100%	**−49°F (−45°C)**

⚠ CAUTION

Never use engine coolant as washer fluid because it could cause paint damage.

In order to prevent freezing of washer fluid, check the freezing temperatures in the table above when adjusting the fluid concentration to the outside temperature.

If you fill the reservoir tank with a fluid with a different concentration from the one used previously, purge the old fluid from the piping between the reservoir tank and washer nozzles by operating the washer for a certain period of time. Otherwise, if the concentration of the fluid remaining in the piping is too low for the outside temperature, it may freeze and block the nozzles.

⚠ CAUTION

- **Adjust the washer fluid concentration appropriately for the outside temperature. If the concentration is inappropriate, sprayed washer fluid may freeze on the windshield and obstruct your view, and the fluid may freeze in the reservoir tank.**
- **State or local regulations on volatile organic compounds may restrict the use of methanol, a common windshield washer anti-freeze additive. Washer fluids containing non-methanol anti-freeze agents should be used only if they provide cold weather protection without damaging your vehicle’s paint, wiper blades or washer system.**

Replacement of wiper blades

Grease, wax, insects, or other material on the windshield or the wiper blade results in jerky wiper operation and streaking on the glass. If you cannot remove the streaks after operating the windshield washer or if the wiper operation is jerky, clean the outer surface of the windshield (or rear window) and the wiper blades using a sponge or soft cloth with a neutral detergent or mild-abrasive cleaner. After cleaning, rinse the windshield and wiper blades with clean water. The windshield is clean if beads do not form when you rinse the windshield with water.

⚠ CAUTION

- **Do not clean the wiper blades with gasoline or a solvent, such as paint thinner or benzine. This will cause deterioration of the wiper blades.**
- **While removing the wiper blades from the wiper arms, do not return the wiper arms to the original positions. Otherwise, the windshield surface may be scratched.**
- **When returning the raised wiper arms to the original positions,**

carefully return the wiper arms on the windshield by hand. You should not return the wiper arms to the windshield only by the return spring. Otherwise, the wiper arms may be deformed and/or the windshield surface may be scratched.

If you cannot eliminate the streaking even after following this method, replace the wiper blades using the following procedures.

■ Windshield wiper blade assembly

▼ Type A

1. Raise the wiper arm off the windshield.

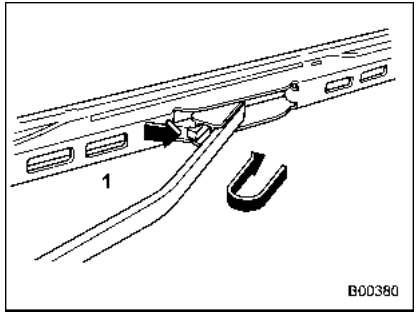

1) Stopper

2. Remove the wiper blade assembly by holding its pivot area and pushing it in the direction shown by the arrow while depressing the wiper blade stopper.
3. Install the wiper blade assembly to the wiper arm. Make sure that it locks in place.
4. Hold the wiper arm by hand and slowly lower it in position.

▼ Type B

1. Raise the wiper arm off the windshield.

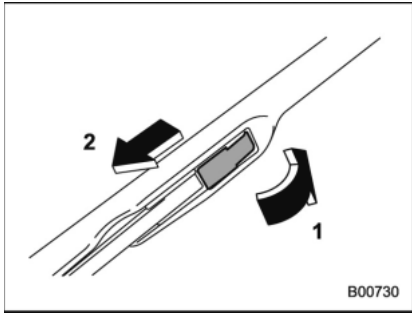

1) Open the cover
2) Pull down the wiper blade

2. Remove the wiper blade assembly by opening the cover and pulling it down in the direction shown in the illustration.
3. Install the wiper blade assembly to the wiper arm. Make sure that it locks in place.
4. Hold the wiper arm by hand and slowly lower it in position.

– CONTINUED –

■ Windshield wiper blade rubber (type A and type B)

NOTE

The following illustrations show the replacement procedures of the blade rubber for a type A wiper blade assembly, however the replacement procedures are the same for a type B wiper blade assembly.

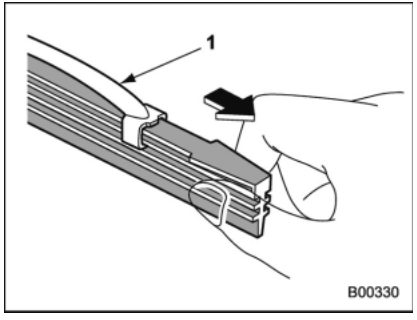

1) Metal support

1. Grasp the locked end of the blade rubber assembly and pull it firmly until the stoppers on the rubber are free of the metal support.

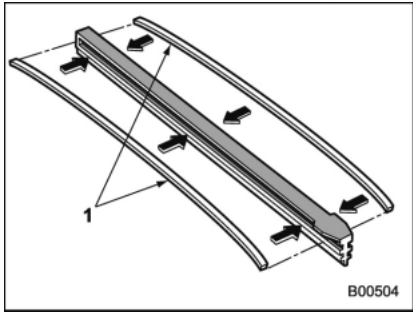

1) Metal spines

2. If the new blade rubber is not provided with two metal spines, remove the metal spines from the old blade rubber and install them in the new blade rubber.

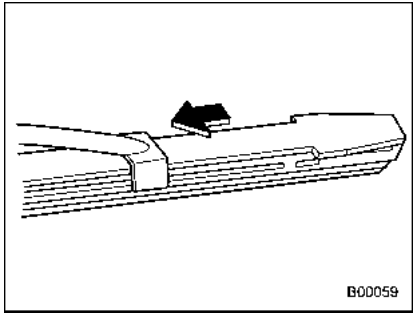

3. Align the claws of the metal support with the grooves in the rubber and slide the blade rubber assembly into the metal support until it locks.

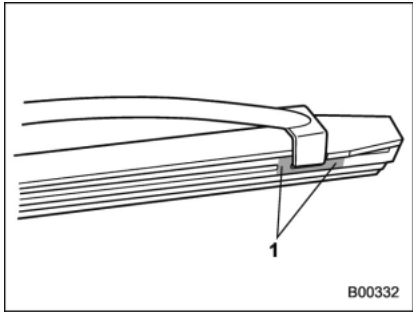

1) Stopper

4. Be sure to position the claws at the end of the metal support between the stoppers on the rubber as shown. If the rubber is not retained properly, the wiper blade may scratch the windshield.

NOTE

The illustration shows the replacement procedure for type A rubber wiper blades, however the replacement procedure is the same for type B. Perform the replacement of type B wiper blades following the procedure in this section.

■ Rear window wiper blade assembly (5-door models)

1. Raise the wiper arm off the rear window.

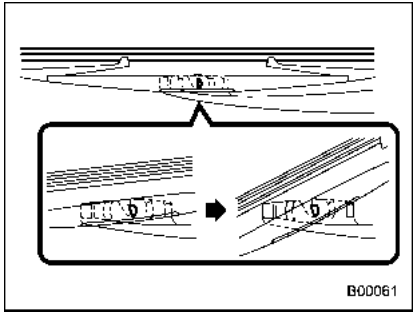

2. Turn the wiper blade assembly counterclockwise.

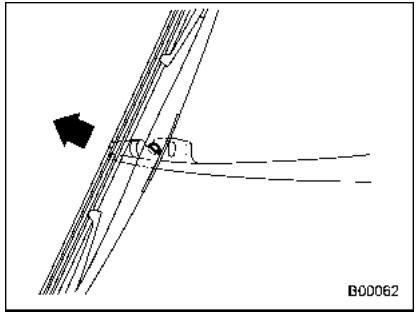

3. Pull the wiper blade assembly toward you to remove it from the wiper arm.
4. Install the wiper blade assembly to the wiper arm. Make sure that it locks in place.
5. Hold the wiper arm by hand and slowly lower it in position.

■ Rear window wiper blade rubber (5-door models)

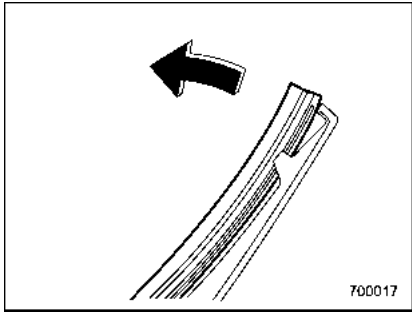

1. Pull out the end of the blade rubber assembly to unlock it from the plastic support.

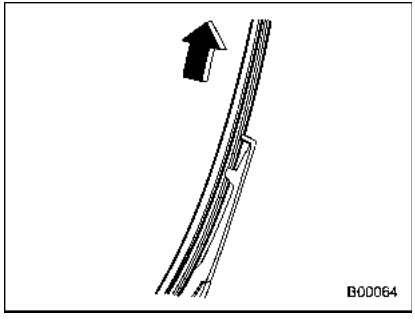

– CONTINUED –

2. Pull the blade rubber assembly out of the plastic support.

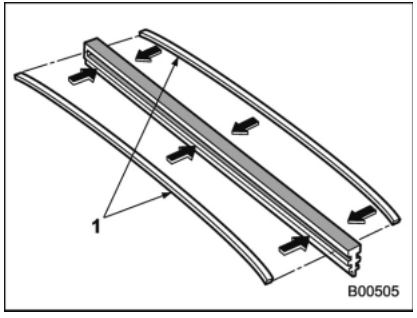

1) Metal spines

3. If the new blade rubber is not provided with two metal spines, remove the metal spines from the old blade rubber and install them in the new blade rubber.

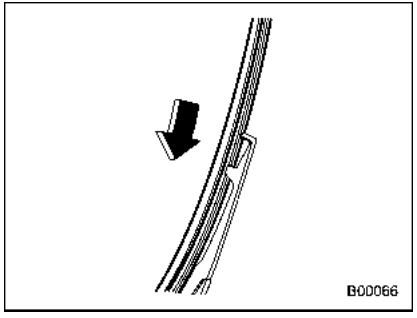

4. Align the claws of the plastic support with the grooves in the blade rubber assembly, then slide the blade rubber assembly into place.

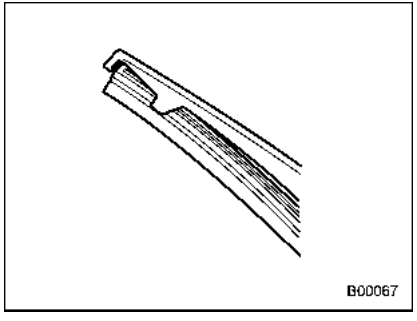

Securely retain both ends of the rubber with the stoppers on the plastic support ends. If the rubber is not retained properly, the wiper may scratch the rear window glass.

5. Install the wiper blade assembly to the wiper arm. Make sure that it locks in place.

6. Hold the wiper arm by hand and slowly lower it in position.

Battery

⚠ WARNING

- **Before beginning work on or near any battery, be sure to extinguish all cigarettes, matches, and lighters. Never expose a battery to an open flame or electric sparks. Batteries give off a gas which is highly flammable and explosive.**
- **For safety, in case an explosion does occur, wear eye protection or shield your eyes when working near any battery. Never lean over a battery.**
- **Do not let battery fluid contact eyes, skin, fabrics, or paint because battery fluid is a corrosive acid. If battery fluid gets on your skin or in your eyes, immediately flush the area with water thoroughly. Seek medical help immediately if acid has entered the eyes.**

  If battery fluid is accidentally swallowed, immediately drink a large amount of milk or water, and seek medical attention immediately.
- **To lessen the risk of sparks, remove rings, metal watchbands, and other metal jewelry. Never allow metal tools to contact the positive battery terminal and anything connected to it WHILE you are at the same time in contact with any other metallic portion of the vehicle because a short circuit will result.**
- **Keep everyone including children away from the battery.**
- **Charge the battery in a well-ventilated area.**
- **Battery posts, terminals and related accessories contain lead and lead compounds, chemicals known to the State of California to cause cancer and reproductive harm. Batteries also contain other chemicals known to the State of California to cause cancer. *Wash hands after handling*.**

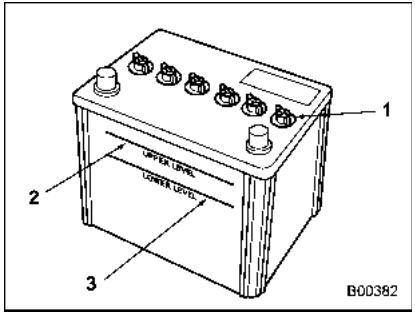

1) Cap
2) Upper level
3) Lower level

It is unnecessary to periodically check the battery fluid level or periodically refill with distilled water.

However, if the battery fluid level is below the lower level, remove the cap. Fill to the upper level with distilled water.

⚠ CAUTION

Never use more than 10 amperes when charging the battery because it will shorten battery life.

Fuses

⚠ CAUTION

Never replace a fuse with one having a higher rating or with material other than a fuse because serious damage or a fire could result.

The fuses are designed to melt during an overload to prevent damage to the wiring harness and electrical equipment. The fuses are located in two fuse boxes.

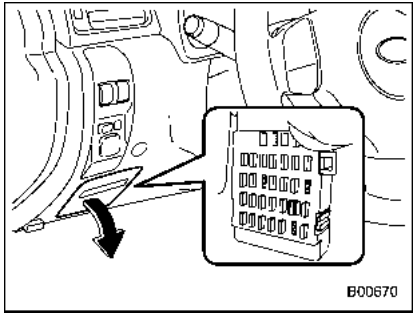

One is located under the instrument panel behind the fuse box cover on the driver's seat side. To remove the cover, pull it out.

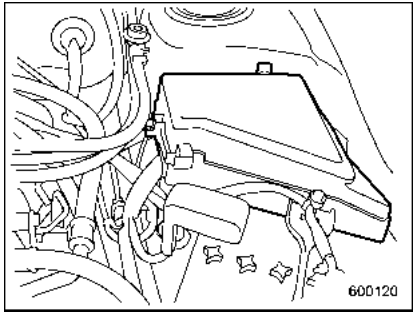

The other one (main fuse box) is housed in the engine compartment.

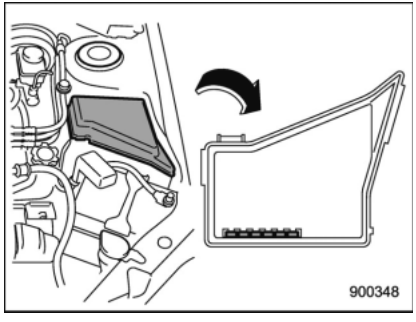

The spare fuses are stored in the main fuse box cover in the engine compartment.

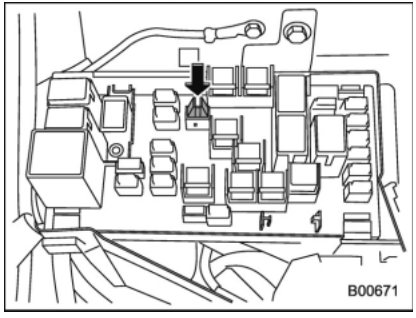

The fuse puller is stored in the main fuse box in the engine compartment.

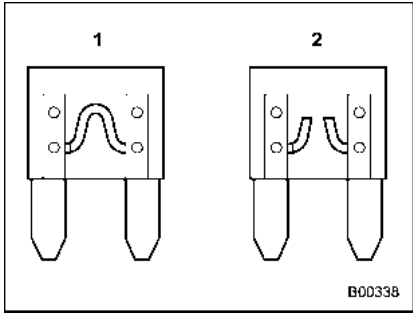

1) Good
2) Blown

If any lights, accessories or other electrical controls do not operate, inspect the

corresponding fuse. If a fuse has blown, replace it.

1. Turn the ignition switch to the “LOCK” position and turn off all electrical accessories.
2. Remove the cover.
3. Determine which fuse may be blown. Look at the back side of each fuse box cover and refer to “Fuses and circuits” ☞12-10.

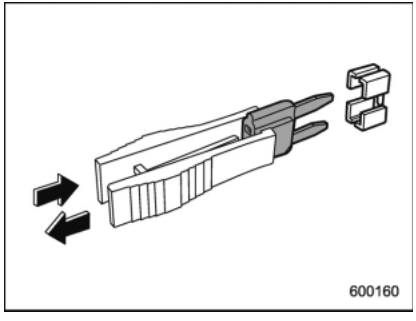

4. Pull out the fuse with the fuse puller.
5. Inspect the fuse. If it has blown, replace it with a spare fuse of the same rating.
6. If the same fuse blows again, this indicates that its system has a problem. Contact your SUBARU dealer for repairs.

Installation of accessories

Always consult your SUBARU dealer before installing fog lights or any other electrical equipment in your vehicle. Such accessories may cause the electronic system to malfunction if they are incorrectly installed or if they are not suited for the vehicle.

Replacing bulbs

⚠ WARNING

Bulbs may become very hot while illuminated. Before replacing bulbs, turn off the lights and wait until the bulbs cool down. Otherwise, there is a risk of sustaining a burn injury.

⚠ CAUTION

Replace any bulb only with a new bulb of the specified wattage. Using a bulb of different wattage could result in a fire. For the specified wattage of each bulb, refer to “Bulb chart” ☞12-14.

■ Headlights (models with HID headlights)

⚠ WARNING

High-intensity-discharge (HID) bulbs are used for the low beams of the headlights. These HID bulbs use an extremely high voltage. To avoid the risk of an electric shock that could result in serious injury, observe the

– CONTINUED –

following precautions.

- **Do not replace any headlight bulbs (both low beam and high beam) by yourself.**
- **Do not remove/restore the headlight assemblies by yourself.**
- **Do not remove any headlight-assembly components by yourself.**

For replacement, contact your SUBARU dealer.

■ Headlights (models without HID headlights)

⚠ CAUTION

Halogen headlight bulbs become very hot while in use. If you touch the bulb surface with bare hands or greasy gloves, fingerprints or grease on the bulb surface will develop into hot spots, causing the bulb to break. If there are finger prints or grease on the bulb surface, wipe them away with a soft cloth moistened with alcohol.

NOTE

- **If headlight aiming is required, consult your SUBARU dealer for proper adjustment of the headlight aim.**
- **It may be difficult to replace the bulbs. Have the bulbs replaced by your SUBARU dealer if necessary.**

▼ Low beam light bulbs

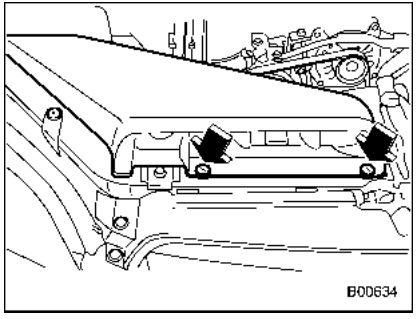

Right-hand side

1. Use a screwdriver to undo the clips on the air intake duct, then remove the air intake duct (right-hand side).

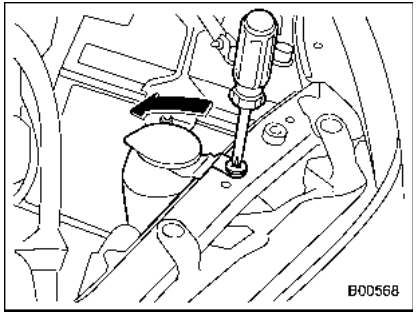

Left-hand side

2. Use a screwdriver to remove the secured clip of the washer tank. To make it easy to access the bulb, move the washer tank to the horizontal direction (left-hand side).

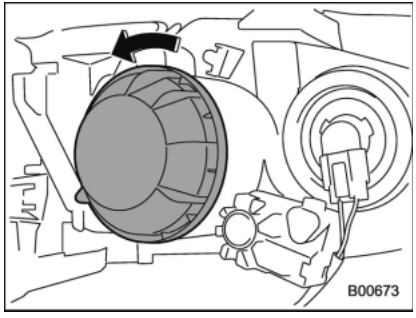

3. Remove the bulb cover, by turning it counterclockwise.

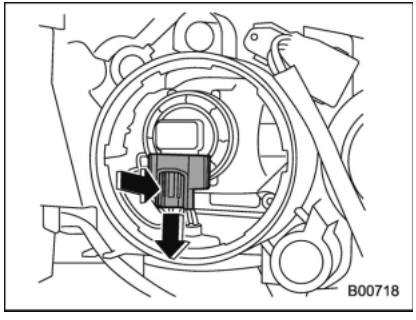

4. Disconnect the electrical connector from the bulb.

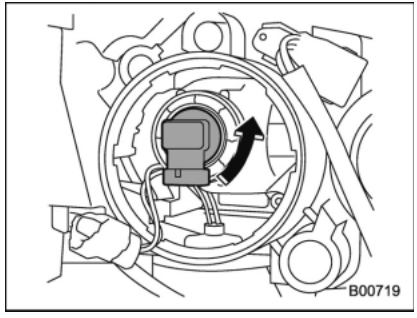

5. Remove the bulb from the headlight assembly by turning it counterclockwise.
6. Replace the bulb with a new one. At this time, do not touch the bulb surface.
7. To install the bulb to the headlight assembly, turn it clockwise until it clicks.
8. Reconnect the electrical connector.
9. Install the bulb cover.
10. Install the air intake duct with clips (right-hand side).
11. Set the washer tank to the original place and secure it by clip (left-hand side).

▼ High beam light bulbs

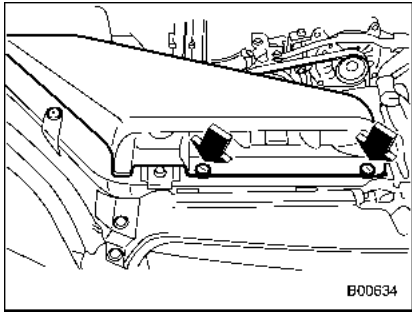

Right-hand side

1. Use a screwdriver to undo the clips on the air intake duct, then remove the air intake duct (right-hand side).

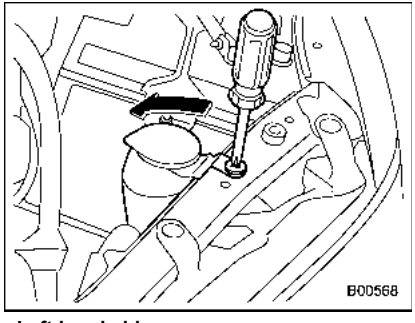

Left-hand side

– CONTINUED –

2. Use a screwdriver to remove the secured clip of the washer tank. To make it easy to access the bulb, move the washer tank to the horizontal direction (left-hand side).

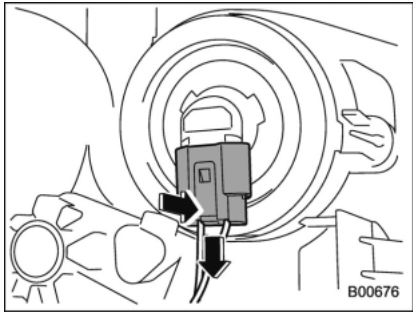

3. Disconnect the electrical connector from the bulb.

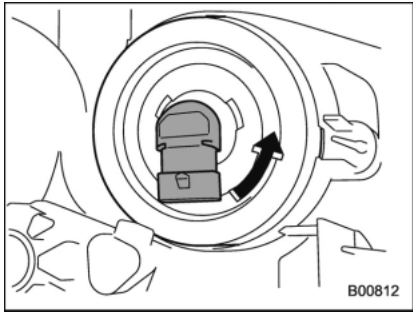

4. Remove the bulb from the headlight assembly by turning it counterclockwise.
5. Replace the bulb with new one. At this time, use care not to touch the bulb surface.
6. To install the bulb to the headlight assembly, turn it clockwise until it clicks.
7. Reconnect the electrical connector.
8. Install the air intake duct with clips (right-hand side).
9. Set the washer tank to the original place and secure it by clip (left-hand side).

■ Front turn signal light

It may be difficult to replace the bulbs. Have the bulbs replaced by your SUBARU dealer if necessary.

■ Front fog light (if equipped)

NOTE

It may be difficult to replace the bulbs. Have the bulbs replaced by your SUBARU dealer if necessary.

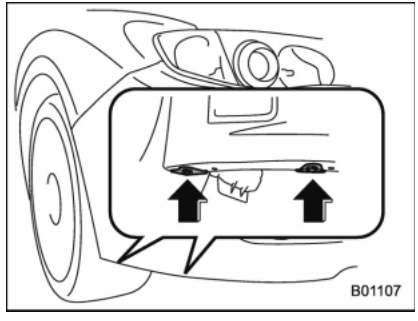

Type A

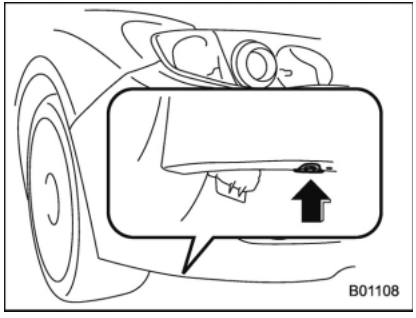

Type B

1. Remove the clips.

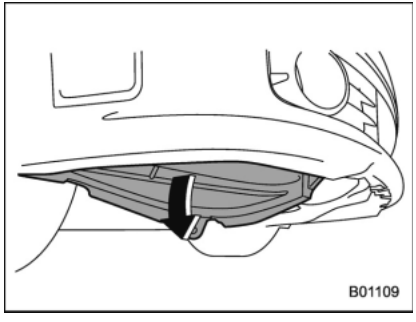

2. Turn over the mud guard.
3. Disconnect the electrical connector.

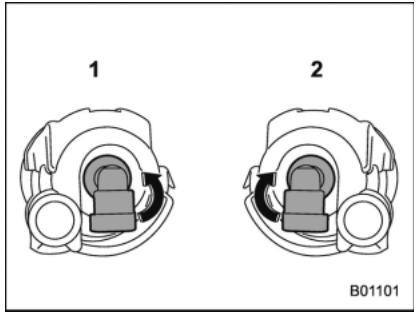

1) View from driver's left-hand side
2) View from driver's right-hand side

4. Remove the bulb.
5. Replace the bulb with a new one.
6. After replacing the bulb, reattach the mud guard.

■ Rear combination lights

▼ 4-door models

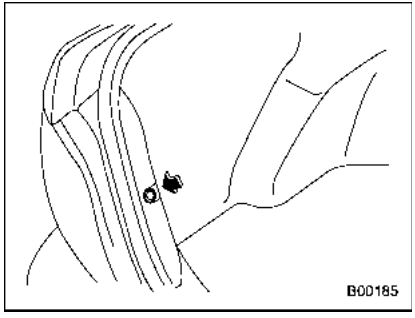

1. Remove the clip from the rear trunk trim with a screwdriver.
2. Open the rear portion of the side trunk trim panel.

– CONTINUED –

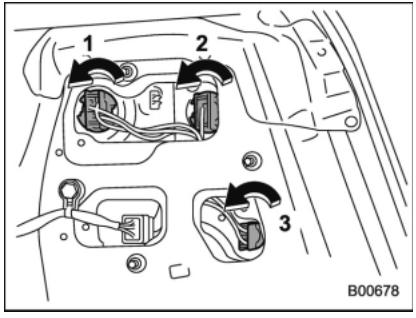

1) Stop light/Tail and rear side marker light
2) Rear turn signal light
3) Backup light

3. Remove the bulb socket from the rear combination light assembly by turning it counterclockwise.
4. Pull the bulb out of the bulb socket and replace it with a new one.
5. Set the bulb socket into the rear combination light assembly and turn it clockwise until it locks.
6. Secure the rear trunk trim panel with the clips.

▼ **5-door models**

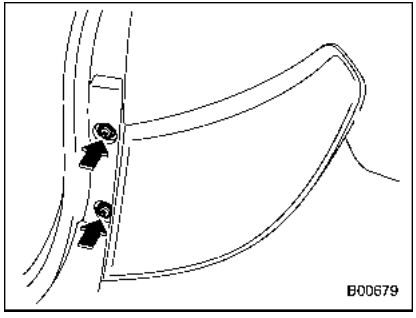

1. Using a Phillips screwdriver, remove the upper and lower screws that secure the rear combination light assembly.

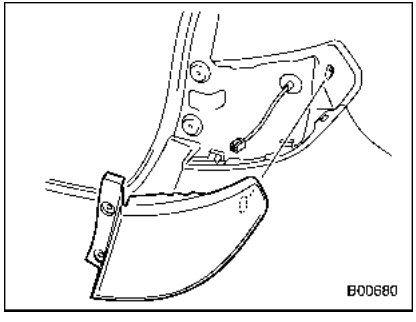

2. Slide the rear combination light assembly rearward and remove it from the vehicle.

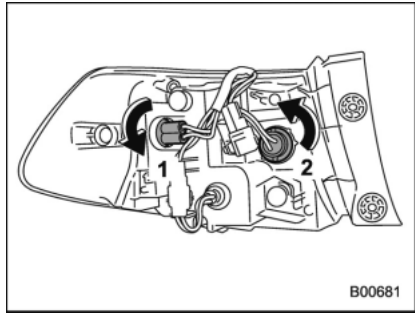

1) Rear side marker light
2) Rear turn signal light

3. Remove the bulb socket from the rear combination light assembly by turning it counterclockwise.
4. Pull the bulb out of the bulb socket and replace it with a new one.
5. Set the bulb socket into the rear combination light assembly and turn it clockwise until it locks.

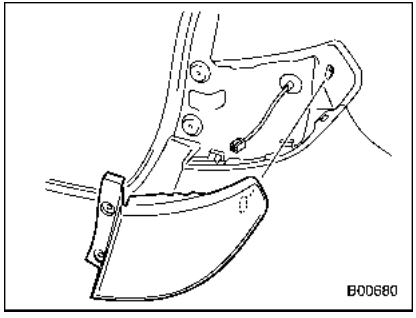

6. Put the rear combination light assembly into place while aligning the clip with the guide on the vehicle.

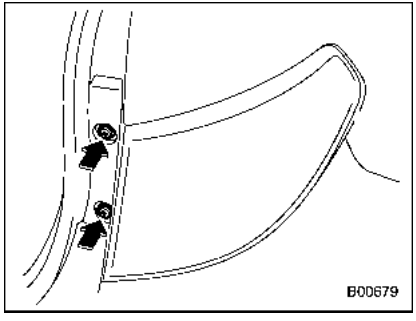

7. Tighten the upper and lower screws.

■ Backup light (5-door)

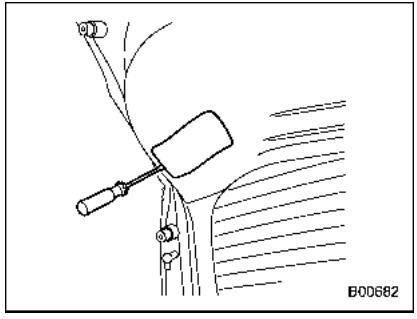

1. Apply a flat-head screwdriver to the light cover as shown in the illustration, and pry the light cover off from the rear gate trim.

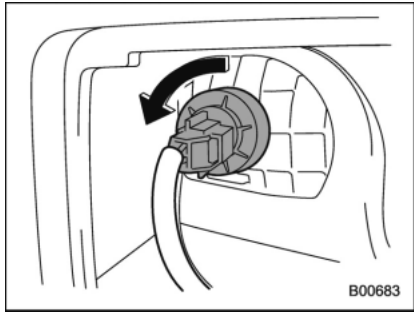

2. Turn the bulb socket counterclockwise and remove it.

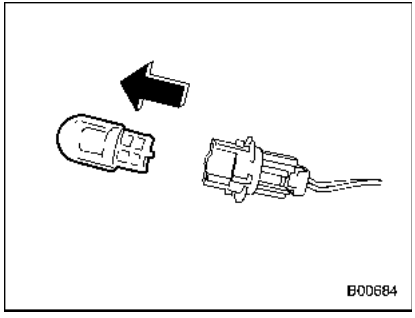

3. Pull the bulb out of the bulb socket and replace it with a new one.
4. Install the bulb socket by turning it clockwise.
5. Install the light cover on the rear gate.

– CONTINUED –

■ License plate light

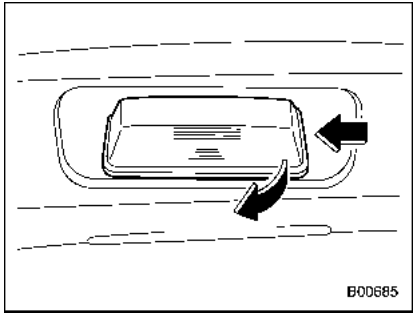

1. Insert a finger into the right side of the license plate light cover, then press once to the left and pull out to remove the cover.

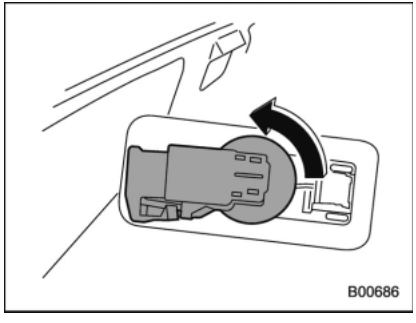

2. Turn the bulb socket counterclockwise and pull out the socket.
3. Pull the bulb out of the socket.
4. Install a new bulb.
5. Reinstall the license plate light cover.

■ Map light

▼ Type A

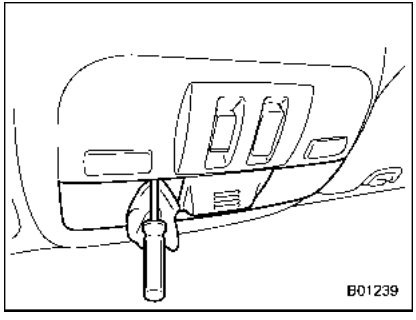

1. Remove the lens by prying the edge of the lens with a flat-head screwdriver.

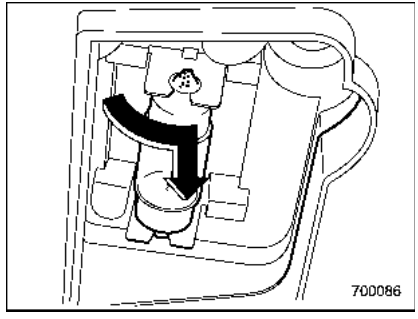

2. Turn the bulb until the flat surfaces at its ends are aligned vertically. Pull the bulb straight downward to remove it.
3. Install a new bulb.
4. Reinstall the lens.

▼ **Type B**

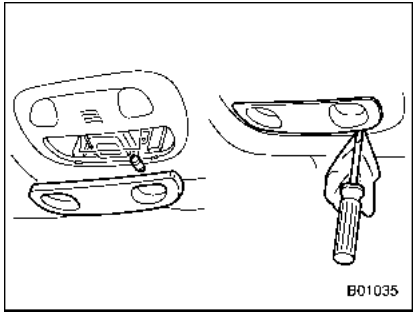

1. Remove the lens by prying the edge of the lens with a flat-head screwdriver.
2. Pull the bulb out of the socket.
3. Install a new bulb.
4. Reinstall the lens.

■ Dome light and cargo area light

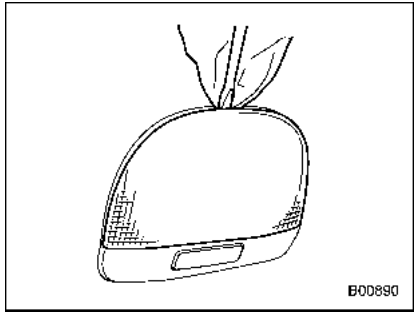

Dome light

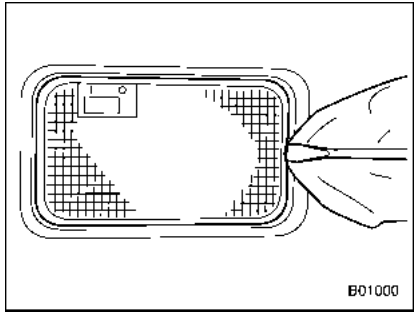

Cargo area light

1. Remove the lens by prying the edge of the lens with a flat-head screwdriver.
2. Pull the bulb out of the socket.
3. Install a new bulb.
4. Reinstall the lens.

■ Trunk light

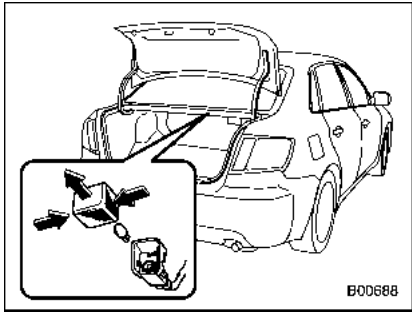

1. Remove the cover by squeezing its sides and pulling it.
2. Pull the bulb out of the socket.
3. Install a new bulb.
4. Reinstall the cover.

– CONTINUED –

■ High-mounted stop light (4-door)

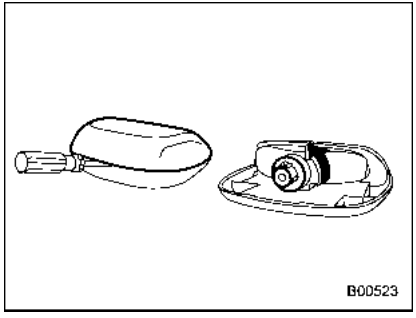

1. Remove the light cover by prying the edge with a screwdriver.
2. Remove the bulb socket from the mount assembly by turning it counter-clockwise.
3. Pull the bulb out of the socket.
4. Install a new bulb.
5. Reinstall the cover.

■ Other bulbs

It may be difficult to replace the bulbs. Have the bulbs replaced by your SUBARU dealer if necessary.

Specifications 12-2
- Dimensions 12-2
- Engine 12-3
- Electrical system 12-3
- Fuel 12-4
- Lubricants 12-5
- Fluids 12-7
- Engine coolant 12-8
- Tires 12-9

Fuses and circuits 12-10
- Fuse panel located in the passenger compartment 12-10
- Fuse panel located in the engine compartment 12-12

Bulb chart 12-14

Vehicle identification 12-17

Specifications

These specifications are subject to change without notice.

■ Dimensions

in (mm)

Item		4-door		5-door	
		Turbo models		Turbo models	
		Except STI	STI	Except STI	STI
Overall length		180.3 (4,580)		173.8 (4,415)	
Overall width		70.7 (1,795)		70.7 (1,795)	
Overall height		58.1 (1,475)	57.9 (1,470)	58.1 (1,475)	57.9 (1,470)
Wheel base		103.3 (2,625)		103.3 (2,625)	
Tread	Front	60.2 (1,530)		60.2 (1,530)	
	Rear	60.6 (1,540)		60.6 (1,540)	
Ground clearance*1		6.1 (155)	5.9 (150)	6.1 (155)	5.9 (150)

*1: Measured with vehicle empty

■ Engine

Engine model	EJ255 (2.5 L, DOHC, turbo, except STI)	EJ257 (2.5 L, DOHC, turbo, STI)
Engine type	Horizontally opposed, liquid cooled 4 cylinder, 4-stroke gasoline engine	
Displacement cc (cu-in)	2,457 (150)	
Bore × Stroke in (mm)	3.9 × 3.1 (99.5 × 79.0)	
Compression ratio	8.4 : 1	8.2 : 1
Firing order	1 – 3 – 2 – 4	

■ Electrical system

Battery type and capacity (5HR)	MT	12V-48AH (55D23L)
Alternator	Turbo models	12V-110A
Spark plugs	Turbo models	SILFR6A (NGK)

– CONTINUED –

■ Fuel

NOTE

The engine is designed to operate using unleaded gasoline.

Model	Fuel requirement	Fuel tank capacity
Except STI	91 AKI (95 RON) or higher*1	16.9 US gal (64 liters, 14.1 Imp gal)
STI	93 AKI (98 RON) or higher*2	

*1: If unleaded gasoline with an octane rating of 91 AKI (95 RON) is not available, unleaded gasoline with an octane rating of 87 AKI (90 RON) or higher may be temporarily used. For details, refer to “Fuel” ☞7-3.
*2: If unleaded gasoline with an octane rating of 93 AKI (98 RON) is not available, unleaded gasoline with an octane rating of 91 AKI (95 RON) may be used with no detriment to engine durability or driveability. For details, refer to “Fuel” ☞7-3.

■ Lubricants

NOTE

Each quantity indicated here is only a guideline. The necessary quantity for replacement may differ slightly depending on the temperature and other factors.

▼ Engine oil

For checking, adding and replacing procedure, or other details, refer to “Engine oil” ☞11-8.

Oil grade	SAE viscosity No. and applicable temperature	Engine oil capacity
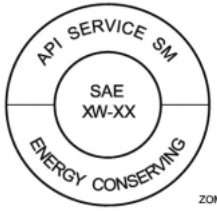 ZOM0297 API (American Petroleum Institute) classification SM with the words “ENERGY CONSERVING” or SN with the words “RESOURCE CONSERVING” **or**  ZOM0293 ILSAC (International Lubricant Specification Advisory Committee) GF-4 or GF-5, which can be identified with the ILSAC certification mark (Starburst mark)	**5W-30 synthetic** oil is the required oil for optimum engine performance and protection. Conventional oil may be used if synthetic oil is unavailable. *: 10W-30, 10W-40, 5W-30 or 5W-40 conventional oil may be used if replenishment is needed but should be changed to 5W-30 synthetic oil at the next oil change. 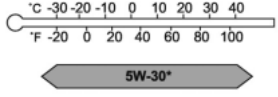 ZOM0296	· When adding the oil from L to F level: 1.1 US qt (1.0 liter, 0.9 Imp qt) · When changing the oil and oil filter: - Except STI: 4.4 US qt (4.2 liters, 3.7 Imp qt) - STI: 4.5 US qt (4.3 liters, 3.8 Imp qt)

– CONTINUED –

▼ Manual transmission and rear differential gear oil

Oil grade	API classification GL-5		
SAE viscosity No. and applicable temperature	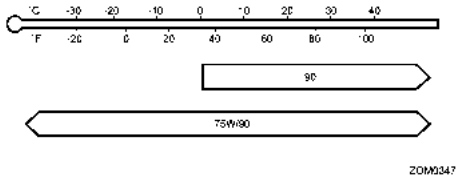		
Oil capacity	Manual transmission oil	5-speed	3.7 US qt (3.5 liters, 3.1 Imp qt)
		6-speed	4.3 US qt (4.1 liters, 3.6 Imp qt)
	Rear differential gear oil	STI models	1.1 US qt (1.0 liter, 0.9 Imp qt)
		Others	0.8 US qt (0.8 liter, 0.7 Imp qt)

For the checking procedures or other details, refer to “Manual transmission oil” ☞11-16 or “Rear differential gear oil” ☞11-17.

■ Fluids

NOTE

Each quantity indicated here is only a guideline. The necessary quantity for replacement may differ slightly depending on the temperature and other factors.

Fluid	Fluid type	Fluid capacity
Power steering fluid	· SUBARU ATF · “Dexron III” Type Automatic Transmission Fluid	0.7 US qt (0.7 liter, 0.6 Imp qt)
Brake fluid	· Genuine SUBARU brake fluid · FMVSS No. 116, fresh DOT 3 or DOT 4 brake fluid	–
Clutch fluid		–

For the checking procedures or other details, refer to “Power steering fluid” ☞11-17, “Brake fluid” ☞11-18 or “Clutch fluid” ☞11-19.

– CONTINUED –

■ Engine coolant

NOTE

Each quantity indicated here is only a guideline. The necessary quantity for replacement may differ slightly depending on the temperature and other factors.

Model		Coolant capacity	Coolant type
Turbo models	Except STI	7.8 US qt (7.4 liters, 6.5 Imp qt)	SUBARU Super Coolant
	STI	8.1 US qt (7.7 liters, 6.8 Imp qt)	

For the checking, adding and replacing procedure, or other details, refer to “Cooling system” ☞11-11.

■ Tires

Tire size		235/45R17	245/40R18
Wheel size		17 × 8 J	18 × 8 1/2 J
Pressure	Front	33 psi (230 kPa, 2.3 kgf/cm^2)	
	Rear	32 psi (220 kPa, 2.2 kgf/cm^2)	
Temporary spare tire	Size	T135/70 D17	
	Pressure	60 psi (420 kPa, 4.2 kgf/cm^2)	
Wheel nut tightening torque		72 lbf·ft (100 N·m, 10 kgf·m)*	

*: This torque is equivalent to applying approximately 88 to 110 lbf (40 to 50 kgf) at the edge of the wheel nut wrench. If you have tightened the wheel nuts by yourself, have the tightening torque checked at the nearest automotive service facility as soon as possible.

Fuses and circuits

■ Fuse panel located in the passenger compartment

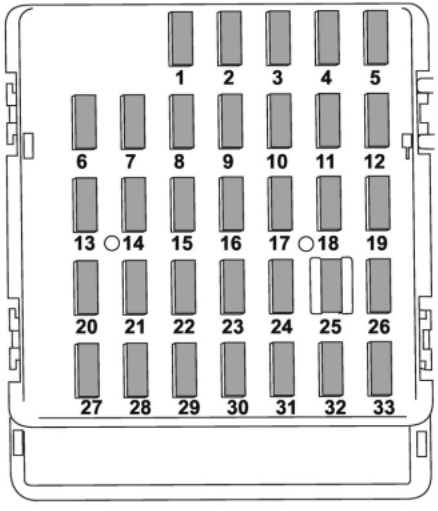

Fuse panel	Fuse rating	Circuit
1	Empty	
2	Empty	
3	15A	• Door locking
4	10A	• Front wiper deicer relay
5	10A	• Combination meter • Clock
6	7.5A	• Remote control rear view mirrors • Seat heater relay
7	15A	• Combination meter • Integrated unit
8	20A	• Stop light
9	15A	• Front wiper deicer
10	7.5A	• Power supply (battery)
11	7.5A	• Turn signal unit
12	15A	• Engine control unit • Integrated unit
13	20A	• Accessory power outlet (center console)
14	15A	• Front side marker light • Tail light • Rear combination light
15	Empty	

Fuse panel	Fuse rating	Circuit
16	10A	• Illumination
17	15A	• Seat heaters
18	10A	• Backup light
19	Empty	
20	10A	• Accessory power outlet (instrument panel)
21	7.5A	• Starter relay
22	15A	• Air conditioner • Rear window defogger relay coil
23	15A	• Rear wiper • Rear window washer
24	15A	• Audio unit
25	15A	• SRS airbag system
26	7.5A	• Power window relay • Radiator main fan relay
27	15A	• Blower fan
28	15A	• Blower fan
29	15A	• Fog light
30	30A	• Front wiper
31	7.5A	• Auto air conditioner unit • Integrated unit
32	Empty	
33	7.5A	• ABS/Vehicle Dynamics Control unit

– CONTINUED –

■ Fuse panel located in the engine compartment

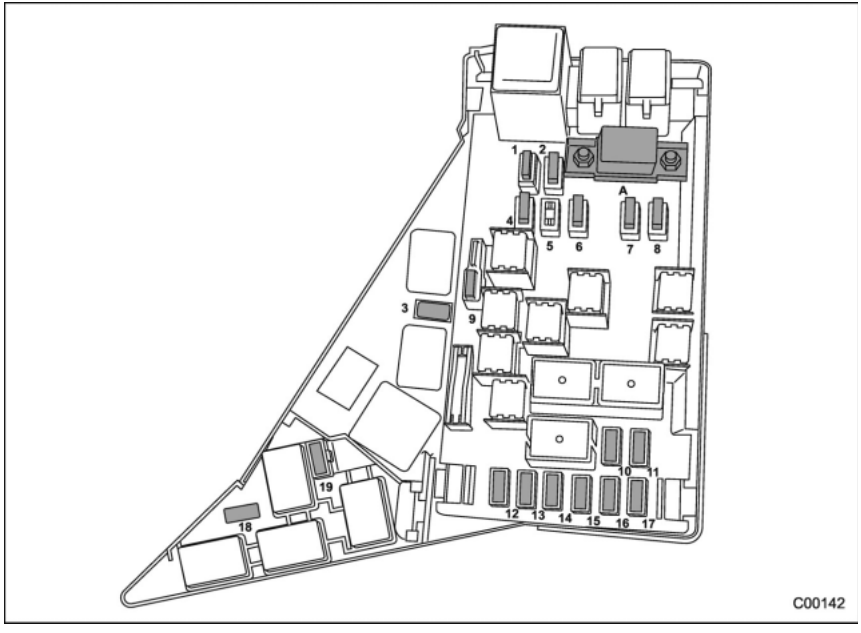

A) Main fuse

Fuse panel	Fuse rating	Circuit
1	30A	• ABS unit • Vehicle Dynamics Control unit
2	25A	• Main fan (cooling fan)
3	10A	• Secondary air combination valve (turbo models)
4	25A	• Sub fan (cooling fan)
5	Empty	
6	10A	• Audio
7	30A	• Headlight (low beam)
8	15A	• Headlight (high beam)
9	20A	• Back-up
10	15A	• Horn
11	25A	• Rear window defogger • Mirror heater
12	15A	• Fuel pump
13	10A	• Automatic transmission control unit
14	7.5A	• Engine control unit
15	15A	• Turn and hazard warning flasher
16	15A	• Tail and illumination relay
17	7.5A	• Alternator

Fuse panel	Fuse rating	Circuit
18	15A	• Headlight (right side)
19	15A	• Headlight (left side)

Bulb chart

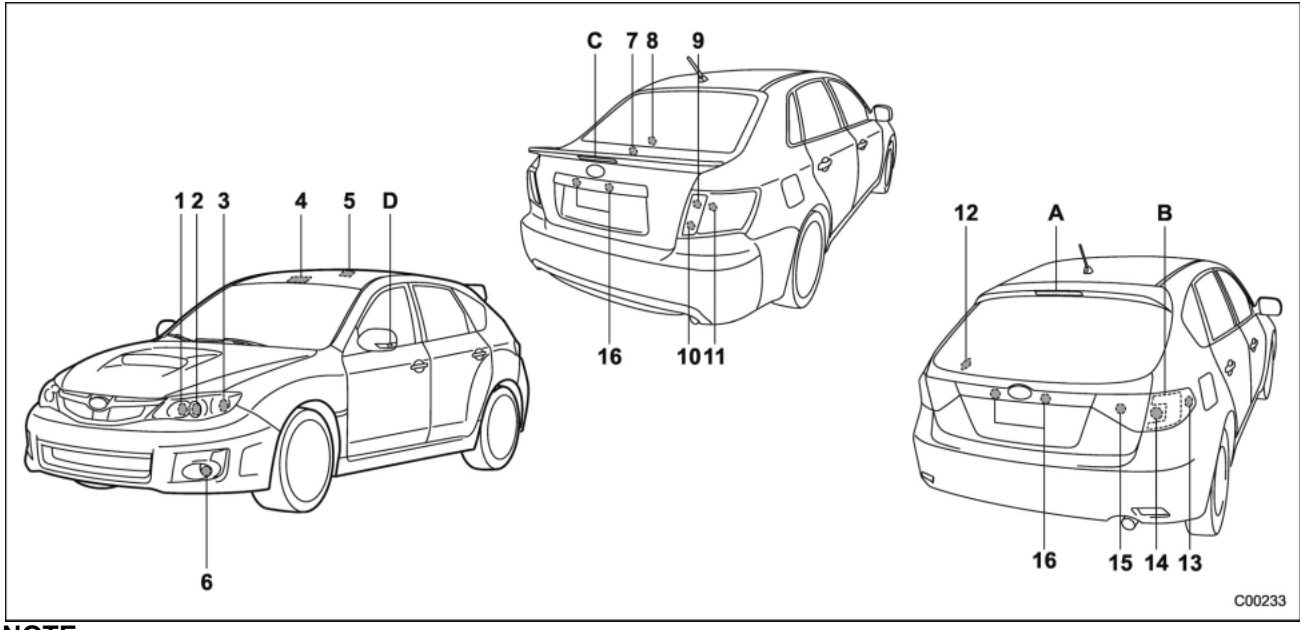

NOTE

Lights from A to D are the LED (Light Emitting Diode) type. Consult your SUBARU dealer for replacement.

		Wattage	Bulb No.
1)	High beam headlight	12V-60W	9005 (HB3)
2)	Low beam headlight		
	Models with HID light	12V-35W	D2S
	Models with halogen light	12V-55W	H11
3)	Front turn signal light/Front side marker light	12V-27/8W	1157NA
4)	Map light	12V-8W	–
5)	Dome light	12V-8W	–
6)	Front fog light	12V-51W	9006 (HB4)
7)	Trunk light (4-door)	12V-5W	168 (W5W)
8)	High-mounted stop light (4-door, if equipped)	12V-21W	(P21W)
9)	Rear turn signal light (4-door)	12V-21W	(WY21W)
10)	Backup light (4-door)	12V-16W	921
11)	Stop light/Tail and rear side marker light (4-door)	12V-21/5W	7443 (W21/5W)
12)	Cargo area light (5-door)	12V-5W	–
13)	Rear side marker light (5-door)	12V-5W	168 (W5W)
14)	Rear turn signal light (5-door)	12V-21W	(WY21W)
15)	Backup light (5-door)	12V-21W	7440
16)	Licence plate light	12V-5W	168 (W5W)
A)	High-mounted stop light (5-door)	–	–
B)	Stop light/Tail light (5-door)	–	–
C)	High-mounted stop light (4-door, if equipped)	–	–
D)	Side turn signal light (if equipped)	–	–

WARNING

- **Bulbs may become very hot while illuminated. Before replacing bulbs, turn off the lights and wait until the bulbs cool down. Otherwise, there is a risk of sustaining a burn injury.**
- **For models with HID low beam headlights, observe the following precautions. Not doing so carries the risk of an electric shock that could result in serious injury because the HID bulbs use an extremely high voltage.**
  - **– Do not replace any headlight bulbs (both low beam and high beam) by yourself.**
  - **– Do not remove/restore the headlight assemblies by yourself.**
  - **– Do not remove any headlight-assembly components by yourself.**

  For replacement, contact your SUBARU dealer.

– CONTINUED –

⚠ CAUTION

Replace any bulb only with a new bulb of the specified wattage. Using a bulb of different wattage could result in a fire.

Vehicle identification

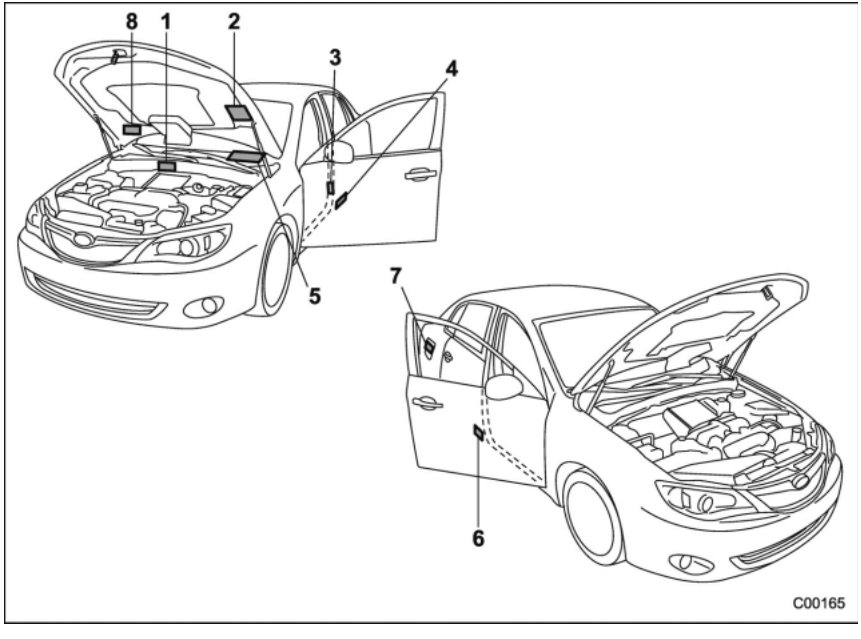

1) Vehicle identification number
2) Emission control label
3) Tire inflation pressure label
4) Certification label
5) Vehicle identification number plate
6) Model number label
7) Fuel label
8) Air conditioner label

For U.S.A. 13-2
Tire information 13-2
Tire labeling 13-2
Recommended tire inflation pressure 13-4
Glossary of tire terminology 13-5
Tire care – maintenance and safety practices 13-10
Vehicle load limit – how to determine 13-10
Determining compatibility of tire and vehicle load capacities 13-13
Adverse safety consequences of overloading on handling and stopping and on tires 13-14
Steps for Determining Correct Load Limit 13-14
Uniform tire quality grading standards 13-15
Treadwear 13-15
Traction AA, A, B, C 13-15
Temperature A, B, C 13-15
Reporting safety defects (U.S.A.) 13-16

For U.S.A.

The following information has been compiled according to Code of Federal Regulations “Title 49, Part 575”.

Tire information

■ Tire labeling

Many markings (e.g. Tire size, Tire Identification Number or TIN) are placed on the sidewall of a tire by tire manufacturers. These markings can provide you with useful information on the tire.

▼ Tire size

Your vehicle comes equipped with P-Metric tire size. It is important to understand the sizing system in selecting the proper tire for your vehicles. Here is a brief review of the tire sizing system with a breakdown of its individual elements.

▽ P Metric

With the P-Metric system, Section Width is measured in millimeters. To convert millimeters into inches, divide by 25.4. The Aspect Ratio (Section Height divided by Section Width) helps provide more dimensional information about the tire size.

Example:

$$\underset{(1)}{\mathbf{P}}\ \underset{(2)}{\mathbf{205}}\ /\ \underset{(3)}{\mathbf{55}}\ \underset{(4)}{\mathbf{R}}\ \underset{(5)}{\mathbf{16}}$$

(1) P = Certain tire type used on light duty vehicles such as passenger cars

(2) Section Width in millimeters

(3) Aspect Ratio (= section height ÷ section width).

(4) R = Radial Construction

(5) Rim diameter in inches

▽ Load and Speed Rating Descriptions

The load and speed rating descriptions will appear following the size designation.

They provide two important facts about the tire. First, the number designation is its load index. Second, the letter designation indicates the tire’s speed rating.

Example:

P 205 / 55 R 16 89 V
Size designation (6) (7)

(6) Load Index: A numerical code which specifies the maximum load a tire can carry at the speed indicated by its speed symbol, at maximum inflation pressure.

For example, “90” means 1,323 lbs (600 kg), “89” means 1,278 lbs (580 kg).

⚠ WARNING

Load indices apply only to the tire, not to the vehicle. Putting a load rated tire on any vehicle does not mean the vehicle can be loaded up to the tire’s rated load.

(7) Speed Rating: An alphabetical system describing a tire’s capability to travel at established and predetermined speeds.

For example, “V” means 149 mph (240 km/h)

⚠ WARNING

- **Speed ratings apply only to the tire, not to the vehicle. Putting a speed rated tire on any vehicle does not mean the vehicle can be operated at the tire’s rated speed.**
- **The speed rating is void if the tires are worn out, damaged, repaired, retreaded, or otherwise altered from their original condition. If tires are repaired, retreaded, or otherwise altered, they may not be suitable for original equipment tire designed loads and speeds.**

▼ Tire Identification Number (TIN)

Tire Identification Number (TIN) is marked on the intended outboard sidewall. The TIN is composed of four groups. Here is a brief review of the TIN with a breakdown of its individual elements.

DOT XX XX XXX XXXX
(1) (2) (3) (4)

(1) Manufacturer’s Identification Mark
(2) Tire Size
(3) Tire Type Code
(4) Date of Manufacture

The first two figures identify the week, starting with “01” to represent the first full week of the calendar year; the second two figures represent the year. For example, 0101 means the 1st week of 2001.

▼ Other markings

The following makings are also placed on the sidewall.

▽ Maximum permissible inflation pressure

The maximum cold inflation pressure to which this tire may be inflated. For example, “300 kPa (44 PSI) MAX. PRESS”

– CONTINUED –

▽ **Maximum load rating**

The load rating at the maximum permissible weight load for this tire. For example, “MAX. LOAD 580 kg (1279 LBS) @ 300 kPa (44 PSI) MAX. PRESS.”

⚠ WARNING

Maximum load rating applies only to the tire, not to the vehicle. Putting a load rated tire on any vehicle does not mean the vehicle can be loaded up to the tire’s rated load.

▽ **Construction type**

Applicable construction of this tire. For example, “TUBELESS STEEL BELTED RADIAL”

▽ **Construction**

The generic name of each cord material used in the plies (both sidewall and tread area) of this tire. For example, “PLIES: TREAD 2 STEEL + 2 POLYESTER SIDEWALL 2 POLYESTER”

▽ **Uniform Tire Quality Grading (UTQG)**

For details, refer to “Uniform tire quality grading standards” ☞13-15.

■ Recommended tire inflation pressure

▼ Recommended cold tire inflation pressure

For recommended cold tire inflation pressure for your vehicle’s tires, refer to “Tires” ☞12-9.

▼ Vehicle placard

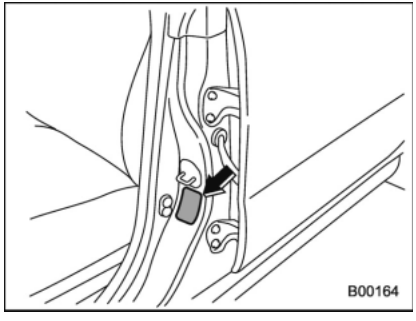

The vehicle placard is affixed to the driver’s side B-pillar.

Example:

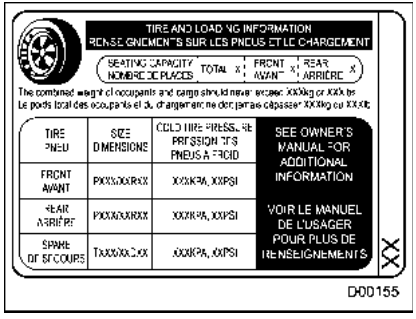

The vehicle placard shows original tire size, recommended cold tire inflation pressure on each tire at maximum loaded vehicle weight, seating capacity and loading information.

▼ Adverse safety consequences of under-inflation

Driving at high speeds with excessively low tire pressures can cause the tires to flex severely and to rapidly become hot. A sharp in-

crease in temperature could cause tread separation, and failure of the tire(s). Possible resulting loss of vehicle control could lead to an accident.

▼ **Measuring and adjusting air pressure to achieve proper inflation**

Check and, if necessary, adjust the pressure of each tire (including the spare) at least once a month and before any long journey. Check the tire pressures when the tires are cold. Use a pressure gauge to adjust the tire pressures to the specific values. Driving even a short distance warms up the tires and increases the tire pressures. Also, the tire pressures are affected by the outside temperature. It is best to check tire pressure outdoors before driving the vehicle. When a tire becomes warm, the air inside it expands, causing the tire pressure to increase. Be careful not to mistakenly release air from a warm tire to reduce its pressure.

■ Glossary of tire terminology

- **Accessory weight**

The combined weight (in excess of those standard items which may be replaced) of automatic transmission, power steering, power brakes, power windows, power seats, radio, and heater, to the extent that these items are available as factory-installed equipment (whether installed or not).

- **Bead**

The part of the tire that is made of steel wires, wrapped or reinforced by ply cords and that is shaped to fit the rim.

- **Bead separation**

A breakdown of the bond between components in the bead.

- **Bias ply tire**

A pneumatic tire in which the ply cords that extend to the beads are laid at alternate angles substantially less than 90 degrees to the centerline of the tread.

- **Carcass**

The tire structure, except tread and sidewall rubber which, when inflated, bears the load.

- **Chunking**

The breaking away of pieces of the tread or sidewall.

- **Cold tire pressure**

The pressure in a tire that has been driven less than 1 mile or has been standing for three hours or more.

- **Cord**

The strands forming the plies in the tire.

- **Cord separation**

The parting of cords from adjacent rubber compounds.

- **Cracking**

Any parting within the tread, sidewall, or inner liner of the tire extending to cord material.

- **Curb weight**

The weight of a motor vehicle with standard equipment including the maximum capacity of fuel, oil and coolant, and if so equipped, air conditioning and additional weight optional engine.

– CONTINUED –

- **Extra load tire**

A tire designed to operate at higher loads and higher inflation pressure than the corresponding standard tire.

- **Groove**

The space between two adjacent tread ribs.

- **Innerliner**

The layer(s) forming the inside surface of a tubeless tire that contains the inflating medium within the tire.

- **Innerliner separation**

The parting of the innerliner from cord material in the carcass.

- **Intended outboard sidewall**

(1) The sidewall that contains a whitewall, bears white lettering or bears manufacturer, brand, and/or model name molding that is higher or deeper than the same molding on the other sidewall of the tire, or

(2) The outward facing sidewall of an asymmetrical tire that has a particular side that must always face outward when mounting on a vehicle.

- **Light truck (LT) tire**

A tire designated by its manufacturer as primarily intended for use on lightweight trucks or multipurpose passenger vehicles.

- **Load rating**

The maximum load that a tire is rated to carry for a given inflation pressure.

- **Maximum inflation pressure**

The maximum cold inflation pressure to which a tire may be inflated.

- **Maximum load rating**

The load rating for a tire at the maximum permissible inflation pressure for that tire.

- **Maximum loaded vehicle weight**

The sum of:

(a) Curb weight
(b) Accessory weight
(c) Vehicle capacity weight
(d) Production options weight

- **Maximum permissible inflation pressure**

The maximum cold inflation pressure to which a tire may be inflated.

- **Measuring rim**

The rim on which a tire is fitted for physical dimension requirements.

- **Normal occupant weight**

150 lbs (68 kg) times the number of occupants specified in the second column of Table 1 that is appended to the end of this section.

- **Occupant distribution**

Distribution of occupants in a vehicle as specified in the third column of Table 1 that is appended to the end of this section.

- **Open splice**

Any parting at any junction of tread, sidewall, or innerliner that extends to cord material.

- **Outer diameter**

The overall diameter of an inflated new tire.

- **Overall width**

The linear distance between the exteriors of the sidewalls of an inflated tire, including elevations due to labeling, decorations, or protective bands or ribs.

- **Passenger car tire**

A tire intended for use on passenger cars, multipurpose passenger vehicles, and trucks, that have a gross vehicle weight rating (GVWR) of 10,000 lbs (4,535 kg) or less.

- **Ply**

A layer of rubber-coated parallel cords.

- **Ply separation**

A parting of rubber compound between adjacent plies.

- **Pneumatic tire**

A mechanical device made of rubber, chemicals, fabric and steel or other materials, that, when mounted on an automotive wheel, provides the traction and contains the gas or fluid that sustains the load.

- **Production options weight**

The combined weight of those installed regular production options weighing over 5.1 lbs (2.3 kg) in excess of those standard items which they replace, not previously considered in curb weight or accessory weight, including heavy duty brakes, ride levelers, roof rack, heavy duty battery, and special trim.

- **Radial ply tire**

A pneumatic tire in which the ply cords that extend to the beads are laid at substantially 90 degrees to the centerline of the tread.

- **Recommended inflation pressure**

The cold inflation pressure recommended by a vehicle manufacturer.

- **Reinforced tire**

A tire designed to operate at higher loads and at higher inflation pressures than the corresponding standard tire.

- **Rim**

A metal support for a tire or a tire and tube assembly upon which the tire beads are seated.

- **Rim diameter**

Nominal diameter of the bead seat.

- **Rim size designation**

Rim diameter and width.

- **Rim type designation**

The industry of manufacturer's designation for a rim by style or code.

- **Rim width**

Nominal distance between rim flanges.

- **Section width**

The linear distance between the exteriors of the sidewalls of an inflated tire, excluding elevations due to labeling, decoration, or protective bands.

- **Sidewall**

That portion of a tire between the tread and bead.

- **Sidewall separation**

The parting of the rubber compound from the cord material in the sidewall.

- **Test rim**

The rim on which a tire is fitted for testing, and it may be any rim listed as appropriate for use with that tire.

- **Tread**

That portion of a tire that comes into contact with the road.

– CONTINUED –

- **Tread rib**

A tread section running circumferentially around a tire.

- **Tread separation**

Pulling away of the tread from the tire carcass.

- **Treadwear indicators (TWI)**

The projections within the principal grooves designed to give a visual indication of the degrees of wear of the tread.

- **Vehicle capacity weight**

The rated cargo and luggage load plus 150 lbs (68 kg) times the vehicle's designated seating capacity.

- **Vehicle maximum load on the tire**

Load on an individual tire that is determined by distributing to each axle its share of the maximum loaded vehicle weight and dividing by two.

- **Vehicle normal load on the tire**

Load on an individual tire that is determined by distributing to each axle its share of the curb weight, accessory weight, and normal occupant weight (distributed in accordance with Table 1 that is appended to the end of this section) and dividing by 2.

- **Wheel-holding fixture**

The fixture used to hold the wheel and tire assembly securely during testing.

Table 1 — Occupant loading and distribution for vehicle normal load for various designated seating capacities

Designated seating capacity, number of occupants	Vehicle normal load, number of occupants	Occupant distribution in a normally loaded vehicle
2 through 4	2	2 in front.
5 through 10	3	2 in front, 1 in second seat.
11 through 15	5	2 in front, 1 in second seat, 1 in third seat, 1 in fourth seat.
16 through 22	7	2 in front, 2 in second seat, 2 in third seat, 1 in fourth seat.

– CONTINUED –

■ Tire care – maintenance and safety practices

• Check on a daily basis that the tires are free from serious damage, nails, and stones. At the same time, check the tires for abnormal wear.

• Inspect the tire tread regularly and replace the tires before their tread wear indicators become visible. When a tire's tread wear indicator becomes visible, the tire is worn beyond the acceptable limit and must be replaced immediately. With a tire in this condition, driving at even low speeds in wet weather can cause the vehicle to hydroplane. Possible resulting loss of vehicle control can lead to an accident.

• To maximize the life of each tire and ensure that the tires wear uniformly, it is best to rotate the tires every 7,500 miles (12,000 km). For information about the tire rotation order, refer to "Tire rotation" ☞11-29. Replace any damaged or unevenly worn tires at the time of rotation. After tire rotation, adjust the tire pressures and make sure the wheel nuts are correctly tightened. For information about the tightening torque and tightening sequence for the wheel nuts, refer to "Flat tires" ☞9-5.

■ Vehicle load limit – how to determine

The load capacity of your vehicle is determined by weight, not by available cargo space. The load limit of your vehicle is shown on the vehicle placard attached to the driver's side B-pillar. Locate the statement "The combined weight of occupants and cargo should never exceed XXX kg or XXX lbs" on your vehicle's placard.

The vehicle placard also shows seating capacity of your vehicle.

The total load capacity includes the total weight of driver and all passengers and their belongings, any cargo, any optional equipment such as a trailer hitch, roof rack or bike carrier, etc., and the tongue load of a trailer. Therefore cargo capacity can be calculated by the following method.

Cargo capacity = Load limit − (total weight of occupants + total weight of optional equipment + tongue load of a trailer (if applicable))

For information about vehicle loading, refer to "Loading your vehicle" ☞8-10.

NOTE

Your vehicle is neither designed nor intended to be used for trailer towing. Therefore, never tow a trailer with your vehicle.

▼ **Calculating total and load capacities varying seating configurations**

Calculate the available load capacity as shown in the following examples:

Example 1A

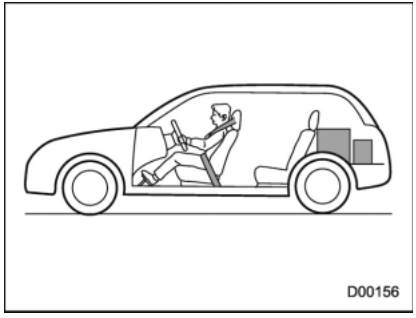

Vehicle capacity weight of the vehicle is 900 lbs (408 kg), which is indicated on the vehicle placard with the statement “The combined weight of occupants and cargo should never exceed 900 lbs or 408 kg”.

For example, if the vehicle has one occupant weighing 154 lbs (70 kg) plus cargo weighing 662 lbs (300 kg).

1. Calculate the total weight.

Total weight

= 154 lbs (70 kg) (Occupant) + 662 lbs (300 kg) (Cargo)

= **816 lbs (370 kg)**

2. Calculate the available load capacity by subtracting the total weight from the vehicle capacity weight of 900 lbs (408 kg).

Available Load Capacity

= 900 lbs (408 kg) (Vehicle capacity weight) − 816 lbs (370 kg) (Total weight)

= **84 lbs (38 kg)**

3. The result of step 2 shows that a further 84 lbs (38 kg) of cargo can be carried.

Example 1B

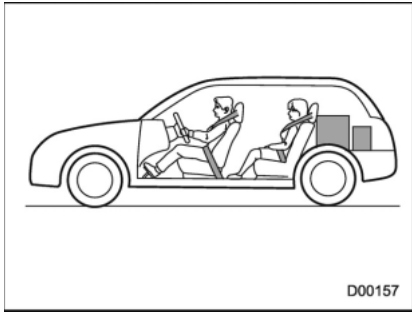

For example, if a person weighing 176 lbs (80 kg) now enters the same vehicle (bringing the number of occupants to two), the calculations are as follows.

1. Calculate the total weight.

Total weight

= 154 lbs (70 kg) + 176 lbs (80 kg) (Occupant)

+ 662 lbs (300 kg) (Cargo)

= **992 lbs (450 kg)**

– CONTINUED –

2. Calculate the available load capacity.

Available Load Capacity

= 900 lbs (408 kg) (Vehicle capacity weight) – 992 lbs (450 kg) (Total weight)

= **–92 lbs (–42 kg)**

3. The total weight now exceeds the capacity weight by 92 lbs (42 kg), so the cargo weight must be reduced by 92 lbs (42 kg) or more.

Example 2A

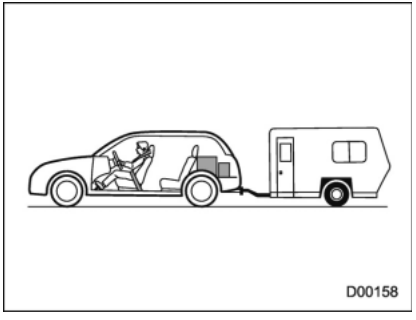

Vehicle capacity weight of the vehicle is 900 lbs (408 kg), which is indicated on the vehicle placard with the statement “The combined weight of occupants and cargo should never exceed 408 kg or 900 lbs”.

For example, the vehicle has one occupant weighing 165 lbs (75 kg) plus cargo weighing 375 lbs (170 kg). In addition, the vehicle is fitted with a trailer hitch weighing 22 lbs (10 kg), to which is attached a trailer weighing 1,764 lbs (800 kg). 10% of the trailer weight is applied to the trailer tongue (i.e. Tongue load = 176 lbs (80 kg)).

1. Calculate the total weight.

Total weight

= 165 lbs (75 kg) (Occupant) + 375 lbs (170 kg) (Cargo)

+ 22 lbs (10 kg) (Trailer hitch) + 176 lbs (80 kg) (Tongue load)

= **738 lbs (335 kg)**

2. Calculate the available load capacity.

Available Load Capacity

= 900 lbs (408 kg) (Vehicle capacity weight) – 738 lbs (335 kg) (Total weight)

= **162 lbs (73 kg)**

3. The result of step 2 shows that a further 162 lbs (73 kg) of cargo can be carried.

NOTE

Your vehicle is neither designed nor intended to be used for trailer towing. Therefore, never tow a trailer with your vehicle.

Example 2B

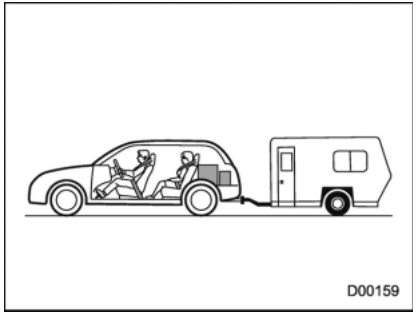

For example, if a person weighing 143 lbs (65 kg) and a child weighing 40 lbs (18 kg) now enter the same vehicle (bringing the number of occupants to three), and a child restraint system weighing 11 lbs (5 kg) is installed in the vehicle for the child to use, the calculations are as follows.

1. Calculate the total weight.

Total weight

= 165 lbs (75 kg) (Occupant) + 143 lbs (65 kg) (Occupant)

+ 40 lbs (18 kg) (Occupant)

+ 11 lbs (5 kg) (Child restraint) + 375 lbs (170 kg) (Cargo)

+ 22 lbs (10 kg) (Trailer hitch) + 176 lbs (80 kg) (Tongue load)

= **932 lbs (423 kg)**

2. Calculate the available load capacity.

Available Load Capacity

= 900 lbs (408 kg) (Vehicle capacity weight) – 932 lbs (423 kg) (Total weight)

= **–32 lbs (–15 kg)**

3. The total weight now exceeds the capacity weight by 32 lbs (15 kg), so the cargo weight must be reduced by 32 lbs (15 kg) or more.

NOTE

Your vehicle is neither designed nor intended to be used for trailer towing. Therefore, never tow a trailer with your vehicle.

■ Determining compatibility of tire and vehicle load capacities

The sum of four tires' maximum load ratings must exceed the maximum loaded vehicle weight ("GVWR"). In addition, sum of the maximum load ratings of two front tires and of two rear tires must exceed each axle's maximum loaded capacity ("GAWR"). Original equipment tires are designed to fulfill those conditions.

The maximum loaded vehicle weight is referred to Gross Vehicle Weight Rating (GVWR). And each axle's maximum loaded capacity is referred to Gross Axle Weight Rating (GAWR). The GVWR and each axle's GAWR are shown on the vehicle certification label affixed to the driver's door.

– CONTINUED –

The GVWR and front and rear GAWRs are determined by not only the maximum load rating of tires but also loaded capacities of the vehicle's suspension, axles and other parts of the body.

Therefore, this means that the vehicle cannot necessarily be loaded up to the tire's maximum load rating on the tire sidewall.

■ Adverse safety consequences of overloading on handling and stopping and on tires

Overloading could affect vehicle handling, stopping distance, and vehicle and tire performance in the following ways. This could lead to an accident and possibly result in severe personal injury.

- Vehicle stability will deteriorate.
- Heavy and/or high-mounted loads could increase the risk of rollover.
- Stopping distance will increase.
- Brakes could overheat and fail.
- Suspension, bearings, axles and other body parts could break or experience accelerated wear that will shorten vehicle life.
- Tires could fail.
- Tread separation could occur.
- Tire could separate from its rim.

■ Steps for Determining Correct Load Limit

1. Locate the statement "The combined weight of occupants and cargo should never exceed XXX kg or XXX lbs." on your vehicle's placard.
2. Determine the combined weight of the driver and passengers that will be riding in your vehicle.
3. Subtract the combined weight of the driver and passengers from XXX kg or XXX lbs.
4. The resulting figure equals the available amount of cargo and luggage load capacity. For example, if the "XXX" amount equals 1,400 lbs (635 kg) and there will be five- 150 lbs (68 kg) passengers in your vehicle, the amount of available cargo and luggage load capacity is 650 lbs. (1,400 − 750 (5 × 150) = 650 lbs)
5. Determine the combined weight of luggage and cargo being loaded on the vehicle. That weight may not safely exceed the available cargo and luggage load capacity calculated in Step 4.
6. If your vehicle will be towing a trailer, load from your trailer will be transferred to your vehicle. Consult this manual to determine how this reduces the available cargo and luggage load capacity of your vehicle.

NOTE

Your vehicle is neither designed nor intended to be used for trailer towing. Therefore, never tow a trailer with your vehicle.

Uniform tire quality grading standards

This information indicates the relative performance of passenger car tires in the area of treadwear, traction, and temperature resistance. This is to aid the consumer in making an informed choice in the purchase of tires.
Quality grades can be found where applicable on the tire sidewall between tread shoulder and maximum section width. For example:

Treadwear 200 Traction AA Temperature A

The quality grades apply to new pneumatic tires for use on passenger cars. However, they do not apply to deep tread, winter type snow tires, space-saver or temporary use spare tires, tires with nominal rim diameters of 12 inches or less, or to some limited production tires.

All passenger car tires must conform to Federal Safety Requirements in addition to these grades.

■ Treadwear

The treadwear grade is a comparative rating based on the wear rate of the tire when tested under controlled conditions on a specified government test course.
For example, a tire graded 150 would wear one and one-half (1-1/2) times as well on the government course as a tire graded 100. The relative performance of tires depends upon the actual conditions of their use, however, and may depart significantly from the norm due to variations in driving habits, service practices and differences in road characteristics and climate.

■ Traction AA, A, B, C

The traction grades, from highest to lowest, are AA, A, B and C. Those grades represent the tire's ability to stop on wet pavement as measured under controlled conditions on specified government test surfaces of asphalt and concrete. A tire marked C may have poor traction performance.

⚠ WARNING

The traction grade assigned to this tire is based on straight-ahead braking traction tests, and does not include acceleration, cornering, hydroplaning, or peak traction characteristics.

■ Temperature A, B, C

The temperature grades are A (the highest), B, and C, representing the tire's resistance to the generation of heat and its ability to dissipate heat when tested under controlled conditions on a specified indoor laboratory test wheel. Sustained high temperature can cause the material of the tire to degenerate and reduce tire life, and excessive temperature can lead to sudden tire failure. The

– CONTINUED –

grade C corresponds to a level of performance which all passenger car tires must meet under the Federal Motor Vehicle Safety Standards No. 109. Grades B and A represent higher levels of performance on the laboratory test wheel than the minimum required by law.

⚠ WARNING

The temperature grade for this tire is established for a tire that is properly inflated and not overloaded. Excessive speed, underinflation, or excessive loading, either separately or in combination, can cause heat buildup and possible tire failure.

Reporting safety defects (U.S.A.)

If you believe that your vehicle has a defect which could cause a crash or could cause injury or death, you should immediately inform the National Highway Traffic Safety Administration (NHTSA) in addition to notifying Subaru of America, Inc.

If NHTSA receives similar complaints, it may open an investigation, and if it finds that a safety defect exists in a group of vehicles, it may order a recall and remedy campaign. However, NHTSA cannot become involved in individual problems between you, your dealer, or Subaru of America, Inc. To contact NHTSA, you may call the Vehicle Safety Hotline toll-free at 1-888-327-4236 (TTY: 1-800-424-9153); go to http://www.safercar.gov; or write to: Administrator, NHTSA, 1200 New Jersey Avenue, SE, West Building, Washington, DC 20590. You can also obtain other information about motor vehicle safety from http://www.safercar.gov.

A
Abbreviation 3
ABS (Anti-lock Brake System) 7-26
  Warning light 3-18
Accessories 5-4, 11-39
Accessory power outlet 6-8
Active head restraint 1-5
Air cleaner element 11-13
Air conditioner
  Automatic climate control system 4-8
  Manual climate control system 4-3
Air filtration system 4-13
Airflow selection
  Automatic climate control system 4-8
  Manual climate control system 4-3
Alarm system 2-15
Aluminum wheel 11-31
  Cleaning 10-3
Antenna system 5-3
Anti-lock Brake System (ABS) 7-26
Arming the system 2-16
Armrest 1-8
Ashtray 6-10
Audio
  Antenna system 5-3
  Auxiliary input jack 5-23
  Bluetooth® audio 5-33
  CD player operation 5-16
  Control button 5-31
  FM/AM radio operation 5-10
  iPod® operations 5-26
  Power and sound controls 5-7
  Satellite radio operations 5-13
  Set 5-4
  USB storage device operations 5-26
Auto-dimming mirror/compass 3-38, 3-39
Automatic climate control system 4-8
Automatic/Emergency Locking Retractor (A/ELR) 1-12
Auxiliary input jack 5-23

B
Battery 11-37
  Drainage prevention function 2-5
  Jump starting 9-9
  Replacement (remote engine start transmitter) 7-12
  Replacement (remote keyless entry system) 2-11
Bluetooth® audio 5-33
Booster seat 1-27
Bottle holder 6-7
Brake
  Assist 7-25
  Booster 7-25, 11-20
  Fluid 11-18, 12-7
  Pad and lining 11-23
  Parking 7-33, 11-23
  Pedal 11-21
  System 7-25
Brake pedal
  Free play 11-21
  Reserve distance 11-21
Brake system 7-25
  Warning light 3-19

Braking 7-24
Tips 7-24
Breaking-in of new brake pads and linings 11-23
Bulb
Chart 12-14
Replacing 11-39

C
Cargo area
Cover 6-12
Light 6-2, 11-47
Tie-down hooks 6-13
Catalytic converter 8-3
Center
Console 6-5
Ventilators 4-3
Center and side ventilators 4-3
Changing
Coolant 11-13
Flat tire 9-5
Oil and oil filter 11-9
Charge warning light 3-16
CHECK ENGINE warning light/Malfunction indicator light 3-15
Checking
Brake pedal free play 11-21
Brake pedal reserve distance 11-21
Clutch function 11-21
Clutch pedal free play 11-22
Coolant level 11-12
Fluid level (brake fluid) 11-18
Fluid level (clutch fluid) 11-19
Fluid level (power steering fluid) 11-17
Fluid level (washer fluid) 11-31
Oil level (engine oil) 11-8
Oil level (manual transmission oil) 11-16
Child restraint systems 1-21
Installation of a booster seat 1-27
Installation with A/ELR seatbelt 1-24
Lower and tether anchorages 1-29
Top tether anchorages 1-31
Child safety 5
Locks 2-20
Chime
Key 3-4
Light 3-29
Seatbelt 3-13
Cigarette lighter 6-9
Cleaning
Aluminum wheels 10-3
Interior 10-5
Ventilation grille 4-12
Climate control system
Automatic 4-8
Manual 4-3
Clock 3-26
Clutch
Fluid 11-19, 12-7
Pedal 11-21
Compass 3-38, 3-39
Console 6-5
Coolant 11-12, 12-8

Cooling system 11-11
Corrosion protection 10-4
Cruise control 7-37
  Indicator light 3-24
  Set indicator light 3-24, 7-38
Cup holder 6-5
  Front passenger's 6-5
  Rear passenger's 6-7

D
Daytime running light system 3-30
Defogger 3-47
Deicer 3-47
Differential gear oil
  Front 12-6
  Rear 11-17, 12-6
Dimensions 12-2
Disarming the alarm system 2-17
Disc brake pad wear warning indicators 7-25
Dome light 6-2, 11-47
Door
  Locks 2-4
  Open warning light 3-20
Drive belts 11-15
Driver's Control Center Differential 7-18
  Auto indicator light 3-24
  Indicator light 3-25
Driving
  AWD vehicles 8-4
  Car phone/cell phone 8
  Drinking 7
  Drugs 7
  Foreign countries 8-4
  Pets 8
  Snowy and icy roads 8-7
  Tips 7-16, 7-17, 8-2, 8-4
  Tired or sleepy 8
  Winter 8-6

E
Electrical system 12-3
Electronic Brake Force Distribution (EBD) system ... 3-19, 7-27
Emergency Locking Retractor (ELR) 1-12
Engine
  Compartment overview 11-6
  Coolant 11-12, 12-8
  Exhaust gas (carbon monoxide) 6, 8-2
  Hood 11-5
  Oil 11-8, 12-5
  Overheating 9-12
  Starting 7-9
  Stopping 7-10
Exterior care 10-2

F
Flat tires 9-5
Floor mat 6-10
Fluid level
  Brake 11-18
  Clutch 11-19
  Power steering 11-17

Fog light
Bulb 11-42, 12-14
Indicator light 3-24
Switch 3-34
Folding mirror switch 3-46
Front
Differential gear oil 12-6
Fog light 3-34, 11-42
Fog light indicator light 3-24
Seatbelt pretensioners 1-19
Turn signal light 11-42
Front seats 1-2
Active head restraint 1-5
Forward and backward adjustment 1-3
Head restraint adjustment 1-4
Reclining 1-3
Seat cushion height adjustment 1-4
Fuel 7-3
Consumption indicator 3-26
Economy hints 8-2
Filler lid and cap 7-4
Gauge 3-9
Requirements 7-3, 12-4
Fuses 11-38
Fuses and circuits 12-10

G

GAWR (Gross Axle Weight Rating) 8-11
Glove box 6-5
GVWR (Gross Vehicle Weight Rating) 8-11

H

Hands-free system 5-35
Hazard warning flasher 3-5, 9-2
Head restraint adjustment
Front seat 1-4
Rear seat 1-8
Headlight
Beam leveler 3-32
Bulb replacement 11-39
Bulb replacing 11-39
Bulb wattage 12-14
Control switch 3-29
Flasher 3-30
Indicator light 3-24
Heater operation (manual climate control system) 4-5
HID headlights 1, 11-39
High beam indicator light 3-24
High-mounted stop light 11-48
High/low beam change (dimmer) 3-30
Hill start assist 7-35, 11-22
OFF indicator light 3-20
To activate/deactivate 7-36
Warning light 3-20
HomeLink® 3-39
Hook
Cargo tie-down 6-13
Shopping bag 6-11
Towing and tie-down 9-13
Horn 3-49
Hose and connections 11-11

I
Ignition switch 3-3
Light 3-4
Illumination brightness control 3-31
Immobilizer 2-2
Indicator light (security indicator light) 3-23
Indicator light
Cruise control 3-24
Cruise control set 3-24
Front fog light 3-24
Headlight 3-24
High beam 3-24
Hill start assist OFF 3-20
Immobilizer 3-23
REV 3-25
Security 3-23
Shift-up 3-23
SI-DRIVE 3-23
Traction control OFF 3-21
Turn signal 3-24
Vehicle Dynamics Control OFF 3-21
Vehicle Dynamics Control operation 3-20, 3-21
Information display 3-26
Inside mirror 3-38
Interior lights 6-2
Internal trunk lid release handle 2-24
iPod® operations 5-26

J
Jack and jack handle 9-4
Jack-up point 9-5
Jump starting 9-9

K
Key 2-2
Number 2-2
Reminder chime 3-4
Replacement 2-3

L
Leather seat materials 10-5
License plate light 11-46
Light
Backup (4-door) 11-43
Backup (5-door) 11-45
Cargo area 6-2, 11-47
Control switch 3-29
Daytime running 3-30
Dome 6-2, 11-47
Front fog 3-34, 11-42
Front position 3-29
Front side marker 12-14
High-mounted stop 11-48
Ignition switch 3-4
License plate 11-46
Map 6-3, 11-46
Rear combination 11-43
Rear side marker light 11-43
Stop light 11-43
Tail light 11-43
Trunk 11-47
Turn signal 3-31, 11-42, 11-43

Limited slip differential (LSD) 7-24
Loading your vehicle 8-10
Low fuel warning light 3-20
Low tire pressure warning light 3-16
Lower and tether anchorage 1-29
LSD (Limited slip differential) 7-24
Lubricants 12-5

M
Maintenance
  Precautions 11-3
  Schedule 11-3
  Seatbelt 1-19
  Tools 9-3
Malfunction indicator light (check engine warning light) ... 3-15
Manual
  Climate control system 4-3
  Transmission oil 11-16, 12-6
  Transmission-5 speeds 7-16
  Transmission-6 speeds 7-14
Map light 6-3, 11-46
Meters and gauges 3-5
Mirror defogger 3-47
Mirrors 3-38
Moonroof 2-27

N
New vehicle break-in driving 8-2

O
Odometer/Trip meter 3-7
Oil filter 11-9
Oil level
  Engine 11-8
  Manual transmission 11-16
  Rear differential gear 11-17
Oil pressure warning light 3-16
Outside
  Mirror defogger 3-47
  Mirrors 3-45
  Temperature indicator 3-27
Overheating engine 9-12

P
Parking
  Brake 7-33
  Brake stroke 11-23
  Tips 7-34
Periodic inspections 8-4
Petrol fuel 7-3
Power
  Door locking switch 2-6
  Outlets 6-8
  Outside mirrors 3-45, 3-47
  Steering 7-24
  Steering fluid 11-17, 12-7
  Windows 2-20
Precautions against vehicle modification 1-21, 1-57
Preparing to drive 7-8

R
Rear
Combination lights..... 11-43
Differential gear oil 11-17, 12-6
Gate..... 2-26, 9-16
Limited slip differential 7-24
Turn signal light 11-43
Rear differential
Oil temperature warning light 3-16
Rear seat..... 1-7
Armrest..... 1-8
Folding down..... 1-9
Head restraint adjustment 1-8
Rear window
Defogger..... 3-47
Wiper and washer switch 3-37
Wiper blades 11-35
Recommended
Brake fluid..... 12-7
Clutch fluid..... 11-19, 12-7
Engine oil..... 12-5
Front differential gear oil 12-6
Manual transmission oil 12-6
Power steering fluid..... 12-7
Rear differential gear oil..... 12-6
Spark plugs..... 12-3
Refueling 7-4
Remote engine start system..... 7-10
Remote keyless entry system..... 2-7
Replacement
Brake pad and lining 11-22
Wiper blades..... 11-32
Replacing
Air cleaner element..... 11-13
Battery (remote engine start transmitter)..... 7-12
Battery (remote keyless entry system)..... 2-11
Lost transmitters (remote keyless entry system) 2-11
Replacing bulbs 11-39, 12-14
Backup light (4-door)..... 11-43
Backup light (5-door)..... 11-45
Cargo area light 11-47
Dome light..... 11-47
Front fog light..... 11-42
Front turn signal light 11-42
Headlight..... 11-39
High-mounted stop light..... 11-48
License plate light..... 11-46
Map light 11-46
Rear combination light 11-43
Rear side marker light..... 11-43
Rear turn signal light..... 11-43
Stop light..... 11-43
Tail light..... 11-43
Trunk light 11-47
REV indicator light and buzzer 3-10
Rocking the vehicle 8-9
Roof molding and crossbar..... 8-12

S
Safety
Precautions when driving..... 5
Symbol..... 2

Warnings 2
Satellite radio 5-13
Seat
Fabric 10-5
Front 1-2
Heater 1-6
Rear 1-7
Seatbelt 5, 1-11
Fastening 1-12
Maintenance 1-19
Pretensioners 1-19
Safety tips 1-11
Warning light and chime 3-13
Security
Alarm system 2-15
ID plate 2-3
Immobilizer 2-2
Indicator light 3-23
Shock sensors 2-19
Shift-up indicator light 3-23
Shock sensors 2-19
Shopping bag hook 6-11
SI-DRIVE
Indicator light 3-23
SI-DRIVE mode 7-22
Snow tires 8-8, 11-24
Snowy and icy roads 8-7
Sounding a panic alarm 2-10
Spark plugs 11-14, 12-3
Specifications 12-2
Speedometer 3-7
SRS
Frontal airbag 1-43
SRS airbag (Supplemental Restraint System airbag) ... 5, 1-34
SRS airbag system
Monitors 1-55
Servicing 1-56
Warning light 3-14
Starting the engine 7-9
State emission testing (U.S. only) 7-7
Steering wheel
Power 7-24
Tilt/telescopic 3-48
Stop light 11-43
Stopping the engine 7-10
Storage compartment 6-4
Sun shade 2-29
Sun visors 6-4
Supplemental Restraint System airbag (SRS) 1-34
Synthetic leather upholstery 10-5

T

Tachometer 3-9
Temperature gauge 3-10
Temperature warning light
Rear differential oil 3-16
Temporary spare tire 9-2
Tether (child restraint system) 1-29, 1-31
Tie-down hooks 9-13
Tire 11-24, 12-9
Chains 8-9
Inspection 11-25

Pressures and wear 11-26
Replacement 11-29
Rotation 11-29
Size and pressure 12-9
Types 11-24
Tire pressure monitoring system (TPMS)..... 7-32, 9-8, 11-24
Warning light 3-16
Tires and wheels 11-24
Tools 9-3
Top tether anchorages 1-29, 1-31
Towing 9-12
All wheels on the ground 9-15
Flat-bed truck 9-15
Hooks 9-13
Trailer
Towing 8-13
Trip meter 3-7
Trunk lid 2-23
Release handle 2-24
Trunk light 11-47
Turn signal
Indicator lights 3-24
Lever 3-31

U

Under-floor storage compartment 6-14
USB storage device operations 5-26

V

Valet mode 2-17
Vanity mirror 6-4
Vehicle
Capacity weight 8-10
Identification 12-17
Symbols 3
Vehicle Dynamics Control
OFF indicator light 3-21
OFF switch 7-30, 7-31
Operation indicator light 3-20, 3-21
System 7-28
Warning light 3-20
Ventilator 4-2

W

Warning and indicator lights 3-12
Warning light
ABS 3-18
Brake system 3-19
Charge 3-16
CHECK ENGINE 3-15
Door open 3-20
Driver's Control Center Differential 3-25
Hill start assist 3-20
Low fuel 3-20
Low tire pressure 3-16
Oil pressure 3-16
Rear differential oil temperature 3-16
Seatbelt 3-13
SRS airbag system 3-14
Vehicle Dynamics Control 3-20
Warranties 1
Washing 10-2

Waxing and polishing 10-3
Wear indicators..... 11-28
Wheel
Aluminum..... 11-31
Balance 11-28
Nut tightening torque 9-5, 12-9
Replacement 11-30
Windows..... 2-20
Windshield
Washer fluid 11-31
Wiper and washer switches..... 3-36
Wiper blades 11-33
Wiper deicer..... 3-47
Winter
Driving..... 8-6
Tires..... 8-8, 11-24
Wiper and washer..... 3-34
Wiper deicer..... 3-47

GAS STATION REFERENCE

■ Fuel:

▼ Turbo models except STI

Use premium **unleaded gasoline** with an octane rating of **91 AKI (95 RON) or higher**. If premium unleaded gasoline with an octane rating of 91 AKI (95 RON) is not available, regular unleaded gasoline with octane rating of 87 AKI (90 RON) or higher may be temporarily used. For optimum engine performance and driveability, it is required that you use premium grade unleaded gasoline with an octane rating of 91 AKI (95 RON) or higher.

▼ STI

The engine is designed to operate at maximum performance using **unleaded gasoline** with an octane rating of **93 AKI (98 RON) or higher**. If 93 AKI (98 RON) fuel is not readily available in your area, unleaded gasoline with an octane rating of 91 AKI (95 RON) may be used with no detriment to engine durability or driveability. However, you may notice a slight decrease in maximum engine performance while using 91 AKI (95 RON) fuel. Use of 91 AKI (95 RON) fuel will not affect your warranty coverage.

■ Fuel octane rating:

This octane rating is the average of the Research Octane and Motor Octane numbers and is commonly referred to as the Anti Knock Index (AKI). Refer to “Fuel octane rating” ☞7-3.

■ Fuel capacity:

16.9 US gal (64 liters, 14.1 Imp gal)

■ Engine oil:

Use only the following oils.

- ILSAC GF-4 or GF-5, which can be identified with the ILSAC certification mark (Starburst mark)
- or API classification SN or SM with the words “ENERGY CONSERVING” or “RESOURCE CONSERVING”

For the complete viscosity requirements, refer to “Engine oil” ☞12-5.

■ Engine oil capacity:

Except STI models: 4.4 US qt (4.2 liters, 3.7 Imp qt)
STI models: 4.5 US qt (4.3 liters, 3.8 Imp qt)

The indicated oil quantity is only a guideline and is estimated based on a case when the engine oil is changed with an oil filter. After refilling the engine with oil, the oil level should be checked using an oil level gauge. For more details about maintenance and service, refer to “Engine oil” ☞11-8.

■ Cold tire pressure:

Refer to “Tires” ☞12-9.

MSA5M1414A

A1180BE-A
Issued June 2013
Printed in USA 07/13
2014A

英　語

FSC
MIX
Paper
FSC® C102270

SUBARU

Subaru of America, Inc., Subaru Plaza,
P.O. Box 6000, Cherry Hill, NJ 08034-6000

FUJI HEAVY INDUSTRIES LTD.
TOKYO, JAPAN

Vehicles shown on the cover of this booklet may not be available in all markets. Please see your Subaru dealer for a Product Brochure detailing all currently available models.