45. Trailer Wire Harness (Option) S903671

A: SCHEMATIC S903671A21

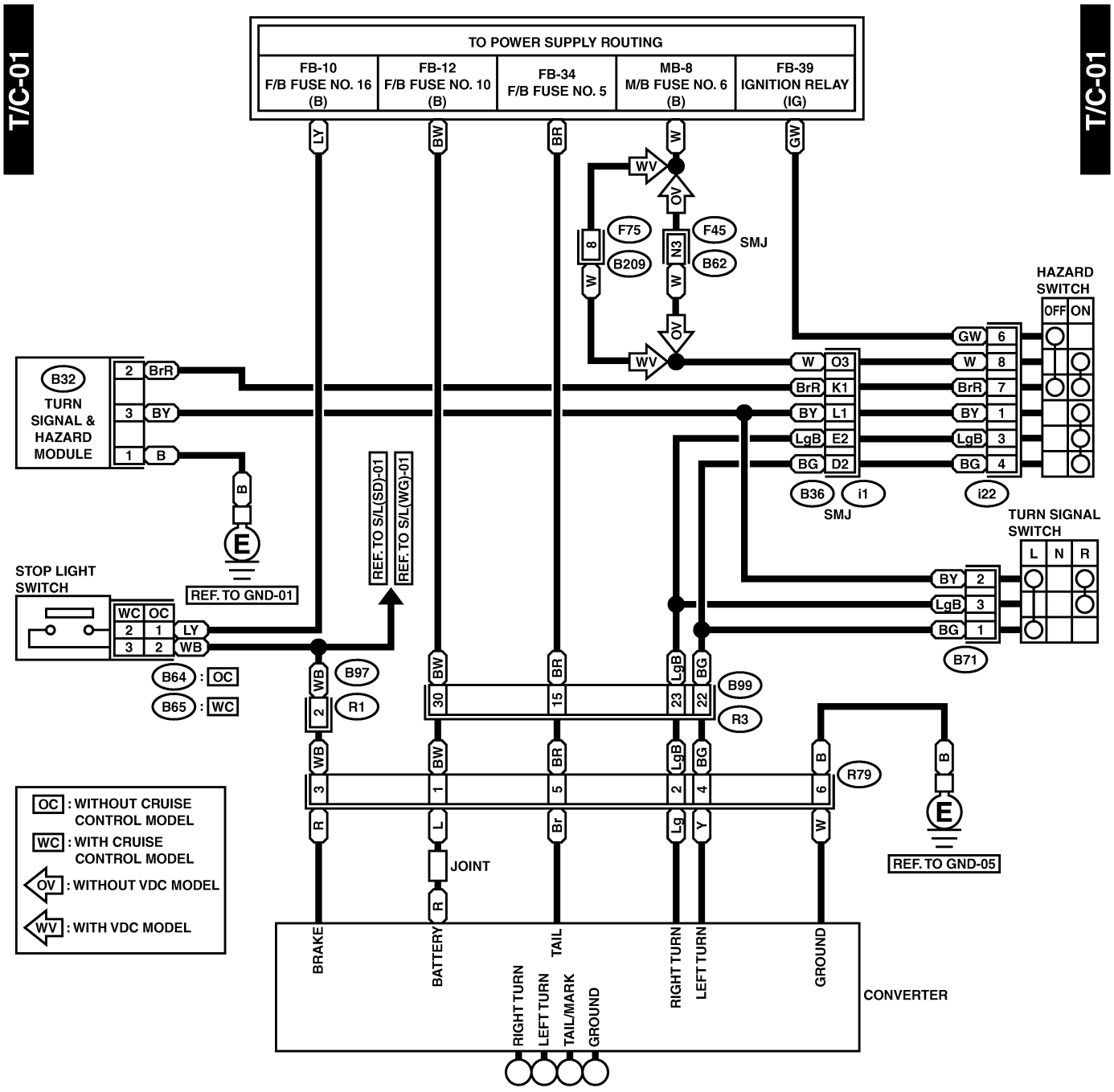

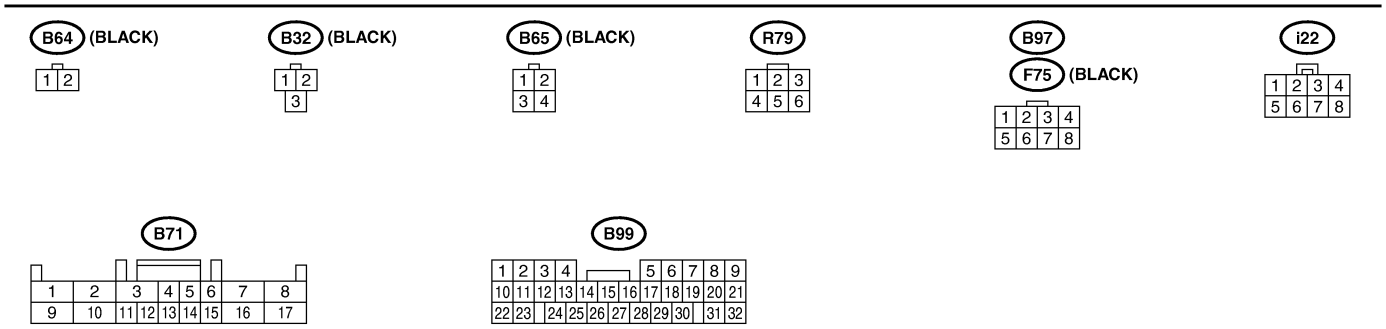

BU93-22