23.Fuel Gauge System
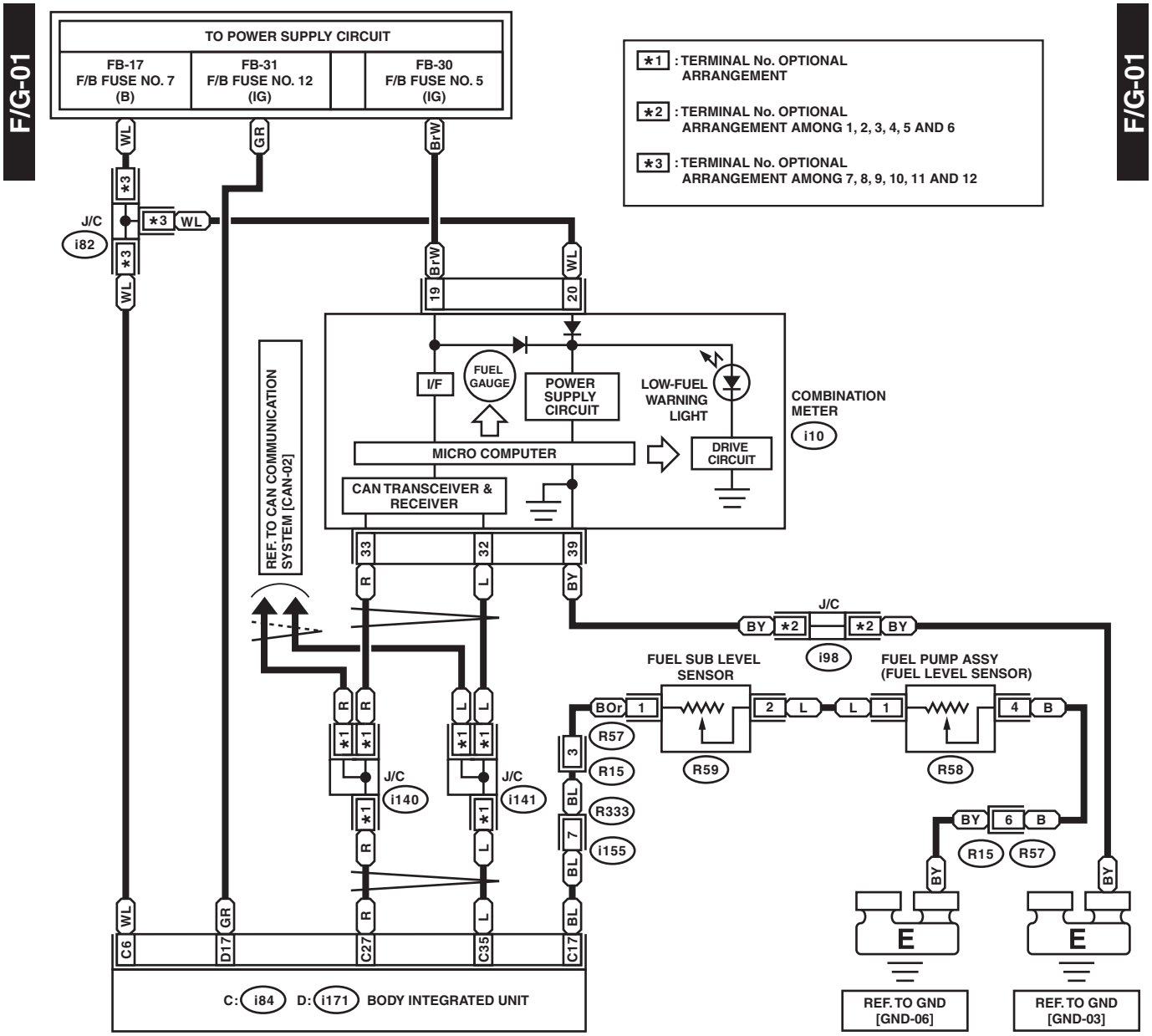
A: WIRING DIAGRAM